Double Pole, Electrically Held, 2 Amps and Less

HFW, HMB, HMS

HFW

Standard Half Size High Performance Relay

Qualified to MIL-R-39016/6

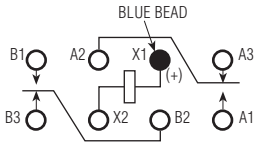

Terminal View

Product Facts

- Hermetically sealed
- Up to 2 amps switching
- High shock & vibration ratings
- Optional terminals & mounting styles
- Excellent RF switching

HMB

Bifilar Half Size High Performance Relay

Qualified to MIL-R-39016/22

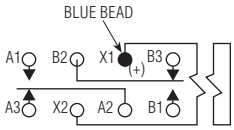

Terminal View

Product Facts

- Hermetically sealed
- Up to 2 amps switching
- High shock & vibration ratings
- Optional terminals & mounting styles
- Excellent RF switching

HMS

Sensitive Half Size High Performance Relay

Qualified to MIL-R-39016/44

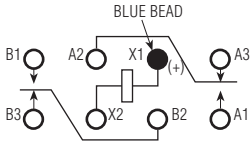

Terminal View

Product Facts

- Hermetically sealed
- Up to 2 amps switching
- High shock & vibration ratings
- Optional terminals & mounting styles
- Excellent RF switching

Electrical Characteristics

Contact Arrangement — 2 Form C (DPDT)

Contact Material —
Stationary —
Hardened silver alloy
Moveable —
Gold plated hardened silver alloy

Contact Resistance —
Before Life — 50 milliohms max. (measured at 10 mA @ 6 Vdc)
After Life — 100 milliohms max. (measured @ 2 A @ 28 Vdc)

Mechanical Life Expectancy — 50 million operations

Coil Voltage —
5 to 48 Vdc (HFW)
6 to 26.5 Vdc (HMB)
5 to 36 Vdc (HMS)

Coil Power — 1.4 watts max. @ 25°C

Duty Cycle — Continuous

Pick-up Voltage — Approximately 50% of nominal coil voltage

Pick-up Sensitivity @ 25°C —
145 to 260 mW (HFW)
325 mW (HMB)
100 to 125 mW (HMS)

Contact Ratings

Contact Load	Type	Operations Min.
2 A @ 28 Vdc	Resistive	100,000
0.75 A @ 28 Vdc	Inductive (200mH)	100,000
0.1 A @ 115 Vac, 60 Hz & 400 Hz	Resistive	100,000
0.3 A @ 115 Vac, 60 Hz & 400 Hz	Resistive	100,000
0.1 A @ 28 Vdc	Intermediate	50,000
0.160 A @ 28 Vdc	Lamp	100,000
30 µA @ 50 mVdc	Low Level	1,000,000

RF Performance

Frequency (MHz)	RF Losses (dB)	VSWR	Isolation (dB)
100	0.1	1.17:1	40
500	0.3	1.19:1	28
1000	0.4	1.19:1	23

Catalog 5-1773450-5
Revised 3-13

www.te.com

Dimensions are shown for reference purposes only. Specifications subject to change.

Dimensions are in millimeters unless otherwise specified.

USA: +1 800 522 6752
Asia Pacific: +86 0 400 820 6015
UK: +44 800 267 666

For additional support numbers please visit www.te.com

Double Pole, Electrically Held, 2 Amps and Less (Continued)

HFW, HMB, HMS (Continued)

Operating Characteristics

Timing —
Operate Time —
4.0 ms max. (HFW)
5.0 ms max. (HMB)
6.0 ms max. (HMS)
Release Time —
4.0 ms max. (HFW)
5.0 ms max. (HMB/HMS)

Contact Bounce — 2.0 ms max.

Dielectric Withstanding Voltage —
Between Open Contacts —
500 Vrms 60 Hz
Between Adjacent Contacts —
1000 Vrms 60 Hz
Between Contacts & Coil —
1000 Vrms 60 Hz

Insulation Resistance —
10,000 megohms min. @ 500 Vdc

Environmental Characteristics

Temperature Range —
-65°C to +125°C

Weight — 0.46 oz. (13 gms max.)

Vibration Resistance —
HFW/HMB/HMS —
Standard — 20 G's, 10 to 2,000 Hz
HFW/HMB —
QPL — 30 G's, 10 to 3,000 Hz
HMS —
QPL — 20 G's, 10 to 2,500 Hz

Shock Resistance —
100 G's, 6 ±1 ms
50 G's, 11 ±1 ms (HMS)

QPL Approval —
MIL-R-39016/6 (HFW)
MIL-R-39016/22 (HMB)
MIL-R-39016/44 (HMS)

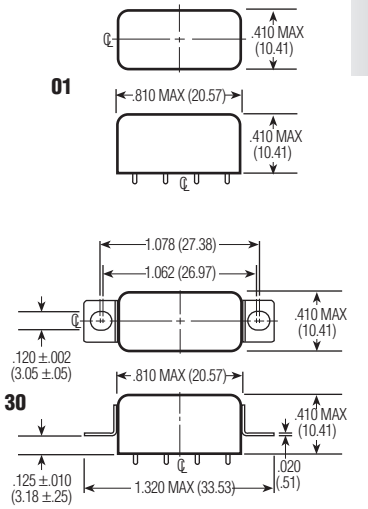

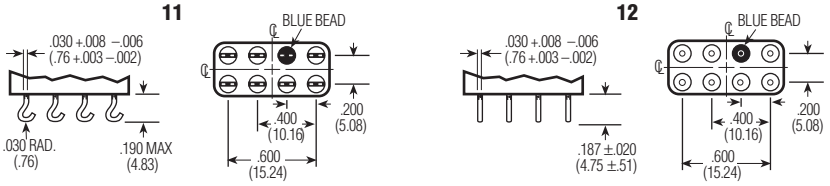

Terminals

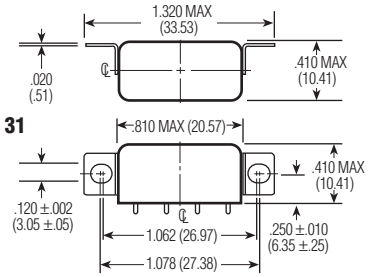

Mounting Styles

Standard Coil Data

	Nom. Coil Voltage (Vdc)	Coil Resistance in Ohms ±10% @ 25°C	Pickup Voltage Vdc (Max.) @ 25°C	Pickup Voltage Vdc (Min.) @ 125°C	Drop-out Voltage Vdc (Min.) @ 25°C	Drop-out Voltage Vdc (Min.) @ -65°C	Nom. Coil Power (mW) @ 25°C	Max. Coil Voltage	Coil Desig.
HFW	5.0	27	2.7	3.8	0.29	0.21	926	6.0	L
	6.0	40	3.2	4.5	0.35	0.25	900	7.5	F
	12.0	160	6.4	9.0	0.7	0.5	900	15.0	G
	26.5	700	13.5	18.0	1.5	1.0	1003	32.0	K
HMB	6.0	40	3.6	4.8	0.35	0.25	900	7.5	F
	12.0	160	7.2	9.6	0.7	0.5	900	15.0	G
	26.5	700	15.0	20.0	1.5	1.0	1003	32.0	K
HMS	5.0	47	2.2	3.2	0.21	0.12	532	7.0	S001
	6.0	75	2.75	4.0	0.27	0.17	480	9.0	S002
	12.0	310	5.6	8.0	0.55	0.35	465	20.0	S003
	26.5	1,030	11.4	16.5	1.1	0.7	682	35.0	S004
	30.0	1,620	14.3	21.0	1.4	0.9	556	44.0	S005
	36.0	2,640	18.0	26.0	1.8	1.1	491	56.0	S006
Other	6-8	60	3.5	4.85	0.35	0.22	817	9.0	A
(avail. for HFW	12-15	320	6.8	9.42	0.68	0.44	570	21.0	B
relays only)	18.0	520	9.5	13.16	0.95	0.62	623	27.0	J
	26.5-32	1,250	14.0	19.4	1.5	0.98	684	42.0	D
	40.0	2,700	21.3	29.5	2.1	1.37	593	61.0	H
	48.0	3,500	25.5	35.3	2.5	1.63	658	70.0	E

Specifying a Part Number Example:

Type	Terminals	Mountings	Coils	Features
HFW	12	30	K	00 (n/a HMS)

* The part number example shown on this page is for catalog items. For a list of specific QPL part numbers, please see the index in Section 15.

Catalog 5-1773450-5
Revised 3-13

www.te.com

Dimensions are shown for reference purposes only. Specifications subject to change.

Dimensions are in millimeters unless otherwise specified.

USA: +1 800 522 6752
Asia Pacific: +86 0 400 820 6015
UK: +44 800 267 666

For additional support numbers please visit www.te.com