General Safety Instructions:

READ SAFETY INSTRUCTIONS

Servicing:

These products are not customer serviceable. TDK-Lambda and their authorised agents only are permitted to carry out repairs.

Critical Components:

These products are not authorised for use as critical components in nuclear control systems, life support systems or equipment for use in hazardous environments without the express written approval of the Managing Director of TDK-Lambda EMEA.

Product Usage:

These products are designed for use within a host equipment which restricts access to authorised competent personnel.

This product is a component power supply and is only to be installed by qualified persons within other equipment and must not be operated as a stand-alone product.

This product is for sale to business to business customers and can be obtained via distribution channels. It is not intended for sale to end users.

This product is a component power supply and complies with the EMC directive. The EMC performance of a component power supply will be affected by the final installation, compliance to the stated EMC standards and conformance to the EMC Directive must be confirmed after installation by the final equipment manufacturer.

For guidance with respect to test conditions please visit our website at https://emea.tdk-lambda.com/EMC_guidance or contact your local TDK-Lambda sales office.

Environmental:

These products are IPX0, and therefore chemicals/solvents, cleaning agents and other liquids must not be used.

Environment:

This power supply is a switch mode power supply for use in applications within a Pollution Degree 2, overvoltage category II environment. Material Group IIIb PCB's are used within it.

Output Loading:

The output power taken from the power supply must not exceed the rating stated on the power supply label, except as stated in the product limitations in this handbook.

Input Parameters:

This product must be operated within the input parameters stated in the product limitations in this handbook.

End of Life Disposal:

The unit contains components that require special disposal. Make sure that the unit is properly disposed of at the end of its service life and in accordance with local regulations.

RISK OF ELECTRIC SHOCK

High Voltage Warning:

Dangerous voltages are present within the power supply. The professional installer must protect service personnel from inadvertent contact with these dangerous voltages in the end equipment.

WARNING: When installed in a Class I end equipment, this product must be reliably earthed and professionally installed.

The (+) or (-) output(s) can be earthed or left floating. The unit cover(s)/chassis must not be made user accessible. The mains input connector is not acceptable for use as field wiring terminals. Do not use mounting screws, which penetrate the unit more than 3mm (FPS/RFE1000), 6mm (HFE/RFE1600/2500 & racks). Special earthing screws are used on these products which connect the cover to the chassis. They must not be removed. If they are removed by mistake, they must be replaced with new ones and the product tested for earth bonding.

This unit must be securely mounted and its earth terminal/baseplate properly boned to the main protective earth

before any connection to the MAINS supply is made. An internal fuse protects the unit and must not be replaced by the user. In case of internal defect, the unit must be returned to TDK-Lambda or one of their authorised agents. A suitable mechanical, electrical and fire enclosure must be provided by the end use equipment for mechanical, electric shock and fire hazard protection.

Energy Hazards:

Certain modules are capable of providing hazardous energy (240VA) according to output voltage setting. Final equipment manufacturers must provide protection to service personnel against inadvertent contact with these module output terminals. If set such, that hazardous energy can occur, then the module terminals or connections must not be user accessible.

Disconnect device: An appropriate disconnect device shall be incorporated in the building installation wiring. Refer to the user manual of the specific model for more details.

Rack mounting safety instructions:

A) Elevated Operating Ambient - If installed in a closed or multi-unit rack assembly, the operating ambient temperature of the rack environment may be greater than room ambient. Therefore, consideration should be given to installing the equipment in an environment compatible with the maximum ambient temperature (Tma) specified by the manufacturer.

B) Reduced Air Flow - Installation of the equipment in a rack should be such that the amount of air flow required for safe operation of the equipment is not compromised.

C) Mechanical Loading - Mounting of the equipment in the rack should be such that a hazardous condition is not achieved due to uneven mechanical loading.

D) Circuit Overloading - Consideration should be given to the connection of the equipment to the supply circuit and the effect that overloading of the circuits might have on overcurrent protection and supply wiring. Appropriate consideration of equipment nameplate ratings should be used when addressing this concern.

E) Reliable Earthing - Reliable earthing of rack-mounted equipment should be maintained. Particular attention should be given to supply connections other than direct connections to the branch circuit (e.g. use of power strips).

HOT SURFACE

External Hot Surfaces:

In accordance with local regulations for Health and Safety at work, manufacturers have an obligation to protect service engineers as well as users. In order to comply with this, a label must be fitted to these products which is clearly visible to service personnel accessing the overall equipment, and which legibly warns that surfaces of these products may be hot and must not be touched when the products are in operation.

The unit may be mounted in any orientation except inverted (mounted on its top) or vertical with the airflow downwards. The ventilation openings on these products must not be impeded. Ensure that there is at least 50mm spacing between any obstruction and the ventilation openings.

The unit cover/chassis is designed to protect skilled personnel from hazards. They must not be used as part of the external covers of any equipment where they may be accessible to operators, since under full load conditions, part or parts of the unit chassis may reach temperatures in excess of those considered safe for operator access.

HFE1600-D1U RACK INSTRUCTION MANUAL

HFE1600-D1U SERIES RACK SPECIFICATIONS

1	Number of power supply modules to be inserted	(*3)	---	Dual Output / Each Output :Maximum 2 units HFE1600 of the same output voltage rating (*3).
2	Maximum output power		W	Refer to HFE1600 specifications
3	Maximum output current		A	266A per output
4	Input voltage / frequency range	(*1)	---	85~265Vac continuous, 47~63Hz, Single phase, separate input for each PS module.
5	Maximum input current (at 100/200Vac)		A	14.2/8.1 for each HFE1600 power supply module
6	Maximum line regulation	(*4)	%	Less than 0.25% of rated output voltage
7	Maximum load regulation	(*5)	%	Less than 0.8% of rated output voltage
8	AC input connector	(*6)	---	Separate for each power supply. HFE1600-D1U: IEC inlet IEC320-C16. HFE1600-D1U-TB: Terminal Block.
9	Output terminals		---	Dual Output; bus-bar output for each output terminal. Refer to outline drawing.
10	Remote sensing	(*2)	V	Possible. Refer to Instruction Manual.
11	Parallel operation		---	Possible. Refer to Instruction Manual.
12	Series operation		---	Possible. Refer to Instruction Manual.
13	Remote On/Off control (INHIBIT)		---	Separate control for each PS unit, by electrical signal or dry contact. OFF: 0~0.6V or short. ON: 2~15V or open.
14	Remote On/Off control (ENABLE)		---	Common for each output, by electrical signal or dry contact. On: 0~0.6V or short. OFF: 2~15V or open.
15	DC OK signal		---	Separate signal for each PS unit, Open collector signal. Maximum sink current: 10mA. Tracking output setting, "LOW" when Vout>90+/-5% from output voltage setting.
16	AC fail signal		---	Separate signal for each PS unit. Open collector signal-Maximum sink current: 10mA. "Low" when input voltage is 85Vac<Vin<270Vac.
17	Over Temperature alarm signal		---	Separate signal for each PS unit, Open collector signal. Maximum sink current: 10mA. Refer to Instruction Manual.
18	Output voltage trimming		---	Separate for each Output, by built-in potentiometer. Refer to Instruction Manual.
19	Output voltage programming		---	Separate for each Output, by 0~5V signal. Refer to Instruction Manual.
20	Output voltage programming via PMBus interface		---	Separate for each Output I2C bus. Refer to Instruction Manual.
21	Auxiliary power supply		---	Separate for each Output. 11.2~12.5VDC. Maximum output current: 0.5A
22	Operating temperature		---	-10~50°C: 100% load. +50°C to 60°C - Derate 2%/°C. +60°C to 70°C - Derate 2.5%/°C.
23	Storage temperature		---	-30~85°C.
24	Operating humidity		---	10~90% RH, no condensation.
25	Storage humidity		---	10~95% RH, no condensation.
26	Vibration		---	Built to meet IEC60068-2-64 (Basic Transportation)
27	Shock		---	Built to meet IEC60068-2-27 (Basic Transportation)
28	Applicable safety standards		---	IEC 62368-1 UL62368-1 CSA22.2 No.62368-1 EN62368-1.
29	Withstand voltage		---	Input-Output: 3000Vrms, 1min. Input-Ground: 2000Vrms, 1min. Output-Ground: 12V,24V,32V models - 500Vrms, 1min. Output-Ground: 48V model - 2250Vdc, 1min.
30	Isolation resistance		---	More than 100Mohm at 25°C and 70% RH. Output-Ground: 500Vdc
31	Weight (Typ) (with accessories)		kg	5.0
32	Size (W*H*D)		---	445x43.6x365mm. Refear to Outline drawing.

Notes:

*1 For cases where conformance to various safety standards (UL, EN etc.) is required, to be described as 100-240Vac (50/60Hz).

*2 Maximum voltage drop on load wires: HFE1600-12: 0.25V/wire, HFE1600-24: 0.5V/wire, HFE1600-32: 0.75V/wire, 1600-48: 1V/wire.

*3 Mixing of units with PMBus option ("HFE1600-xx/S") and standard units ("HFE1600-xx") is not allowed.

*4 From 85 ~132Vac or 170 ~ 265Vac, constant load.

*5 From No-load to Rated load, constant input voltage. Measured at the sensing point in Remote sense.

*6 Use UL approved Insulated terminal lugs.

SAFETY APPROVALS

UL62368-1 and CSA22.2 No.62368-1 - UL Recognized. C-UL for Canada
IEC 62368-1 - CB Test Report and Certificate.
EN 62368-1 - TUV Mark, CE Mark.
Marking by the CE Symbol indicates compliance to the EMC Directive, the Low Voltage Directive and RoHS Directive of the European Union.
UKCA Marking, when applies to a product covered by this handbook, indicates compliance with the Electrical Equipment (safety) Regulations 2016, Electromagnetic Compatibility Regulations 2016 and Restriction of the Use of Certain Hazardous Substances in Electrical & Electronic Equipment regulation 2012.
A CE "Declaration of Conformity" in accordance with the preceding directives and standards has been made and available on file at our EU representative TDK LAMBDA EUROPE GmbH, located at Karl-Bold-Str. 40, D-77855 Achern.
A UKCA "Declaration of Conformity" in accordance with the preceding directive and standards has made and is on file at our UK representative TDK-Lambda UK Limited, Kingsley Avenue, Ilfracombe, Devon EX34 8ES.
Both "Declaration of Conformity" may be accessed via company website www.emea.tdk-lambda.com/manual.

All models of HFE and RFE series are professional equipment and are not intended for sale to the general public.

SAFETY INSTRUCTIONS

CAUTION: The following safety precaution must be observed during all phases of operation, service and repair of this equipment. Failure to comply with the safety precautions or warnings in this document violates safety standards of design, manufacture and intended use of this equipment and may impair the built-in protections within. TDK Lambda shall not be liable for user's failure to comply with these requirements.

CAUTION: HFE1600-D1U rack is not authorized for use as critical component in nuclear control systems, life support systems or equipment for use in hazardous environments without the express written approval of the managing director of TDK-Lambda.

INSTALLATION (OVERVOLTAGE) CATEGORY& ENVIRONMENTAL CONDITIONS

The HFE1600-D1U has been evaluated to Overvoltage category II.
The HFE1600-D1U intended for use in the following operation conditions:
* Indoor use * Pollution degree 2 * Max. operational altitude: 3000m above sea level
*Ambient temperature: -10°C-50°C at 100% load, up to 70°C with output de-rating applied (refer to Specification above).

GROUNDING

HFE1600-D1U rack is Class I product. To minimize shock hazard, the HFE1600-S1U rack must be connected to an electrical ground. The instruments must be connected to the AC power supply mains through a three conductor power cable, with the ground wire firmly connected to an electrical ground (safety ground) at the power outlet. For instruments designed to be hard-wired to the supply mains, the protective earth terminal must be connected to the safety electrical ground before any other connection is made. Any interruption of the protective ground conductor or disconnection of the protective earth terminal will cause a potential shock hazard that might cause personal injury.

LIVE CIRCUITS

Operating personnel must not remove the HFE1600-D1U rack cover.
No internal adjustment or component replacement is allowed by non-TDK Lambda qualified service personnel. Never replace components with power cable connected. To avoid injuries, always disconnect power, discharge circuits and remove external voltage sources before touching components.
Restricted Access Area: HFE1600-D1U rack should only be installed in a Restricted Access Area. Access should be available to service personnel only.

PARTS SUBSTITUTIONS & MODIFICATIONS

Parts substitutions and modifications are allowed by authorized TDK Lambda service personnel only. For repairs or modifications, the instrument must be returned to TDK Lambda service facility.

AC INPUT, AC INPUT RATING, AC POWER CABLES

CAUTION	ATTENTION
Risk of electrical shock and energy hazard. Disconnecting one power supply line disconnects only one power supply module. To isolate the unit completely, disconnect all power supply lines. Terminal blocks should only be used by professional workers to connect AC cables.	Risque de choc et de danger e'lectriques. Le de'branchement d'une seule alimenttation stabilise'e ne de'branche uniquement qu'un module "Alimentation Stabilise'e". Pour isoler completement le module en cause, il faut de'brancher toutes les alimentations stabilise'es.

Do not connect HFE1600-D1U to mains supply exceeding the input voltage and frequency rating of HFE1600-D1U. The input voltage and frequency rating is: 100-240V~, 50/60Hz. For safety reasons, the mains supply voltage fluctuations should not exceed +/-10% of nominal voltage.

AC Cables are not provided with unit. Refer to table below for recommended AC cables.

HFE1600- D1U	HFE1600- D1U/TB
Standard high temprature power cable with type C15 appliance plug rated: EU - 10A/250V; US/C - 15A/250V	Min. - 14AWG (1.5 mm^2), rated Min. 300Vac, 105°C for supply and ground connection.
	Terminal Lug - Use UL approved Insulated terminal lugs.

HEAT HAZARD

WARNING: Top, bottom and side surfaces may become hot when operating the unit continuously. To reduce the risk of injury from a hot surface, allow the surface to cool before touching.

ENERGY HAZARD

The main output of HFE1600-D1U is capable of providing hazardous energy. Due to hazardous energy level the output bus bars and connections therefore must not be user accessible. Manufacturer's final equipment must provide protection to service personnel against inadvertent contact with output bus bars.

OVERCURRENT PROTECTION:
A readily accessible branch circuit over current protective device rated 30A max. per each input must be incorporated in the building wiring. The protective device must disconnect both supply line simultaneously.

FUSES

There are no fuses in the HFE1600-D1U rack.

Multiple power source: Caution Shock hazard - all power sources shall be disconnected before servicing to avoid shock hazard

SYMBOLS

	CAUTION Risk of Electrical Shock.
	Instruction manual symbol. The instrument will be marked with this symbol when it is necessary for the user to refer to the instruction manual.
	Indicates hazardous voltage.
	This symbol indicates the presence of a hot surface or component. Touching this surface could result in bodily injury.
	Indicates ground terminal.
	Protective earth; protective ground. Indicates the terminal which is intended for connection to an external conductor for protection against electric shock in case of a fault.
	All power sources shall be disconnected before servicing to avoid shock hazard.
L1	Indicates first Line supply terminal
L2/N	Indicates second Line or Neutral supply terminal
WARNING	Denotes hazard. An attention to a procedure is called. Not following the procedure correctly could result in personal injury. A WARNING sign should not be skipped and all indicated conditions must be fully understood and met.
CAUTION	Denotes hazard. An attention to a procedure is called. Not following the procedure correctly could result in damage to the equipment.

1. REAR PANEL CONNECTIONS AND CONTROLS

Fig 1.1 Rear view of HFE1600-D1U series

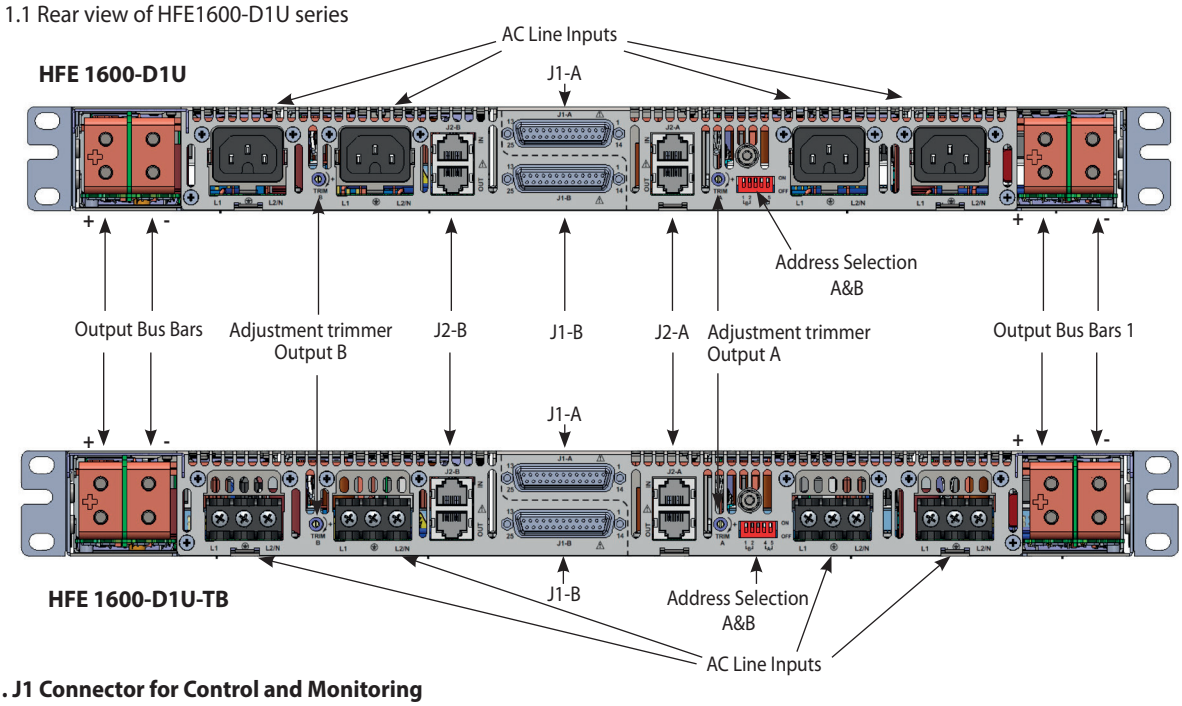

1.1. J1 Connector for Control and Monitoring

Mating for J1-A/B Control Plug or custom made plug / cable should be inserted to J1-A/B for proper HFE1600-D1U rack operation. Refer to Chapter 3 for connection diagrams.

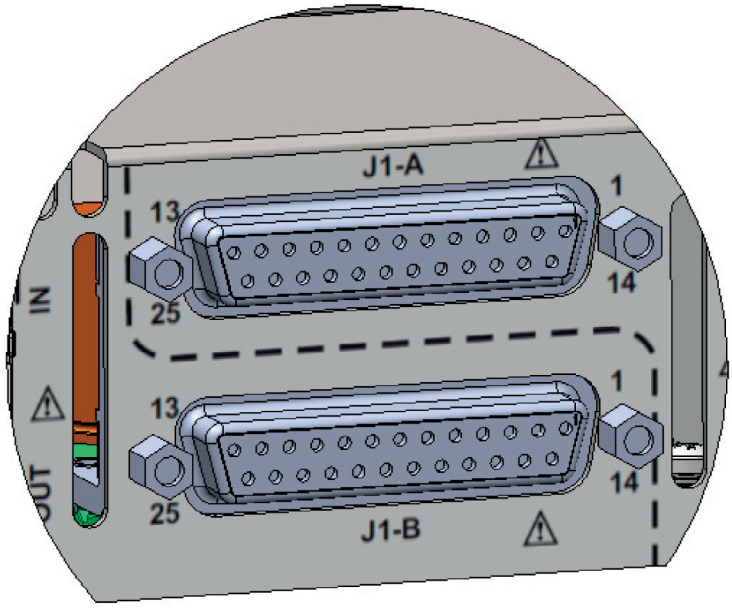

J1 - A/B Pin Allocation Chart see Table 1.1.a/1.1.b

J1- Connector description: P/N 2-1734285-3 (AMP)
Mating Plug description: P/N DB-25 (Male)

Table 1.1.a Pin Allocation chart for J1-A / J1-B

Pin #	Name	Description	Pos.#		Control plug J1-A/B	Referenced to
			J1-A	J1-B		
1	-LS	Connected to Negative Output bus bar through 3 Ohm resistor	Output_A	Output_B	Short	
5,14	-SENSE	Negative sense Connected to -LS for local sensing, or -V on Load side.	Output_A	Output_B		
2	+LS	Connected to Positive Output bus bar through 3 Ohm resistor	Output_A	Output_B	Short	
15	+SENSE	Positive sense Connected to +LS for local sensing, or +V on Load side.	Output_A	Output_B		
3	TRIM	Output of rear Panel potentiometer, for manual adjustment of output voltage	Output_A	Output_B	Short	-SENSE
16	V_PROG	Input (0~5V) referenced to -S. Provides Vout programming by Voltage. Refer to Fig 1.4, 3.6, 3.7	Output_A	Output_B		-SENSE
4	+5V_Vref	5V fix output for standard option unit. V_REF for Voltage programming when PMBus option is being used. Refer to Instruction Manual Chapter 3.	Output_A	Output_B		-SENSE
6	TEMP_ALM_1	Output signal of PS in position A1/B1. "LOW" when the internal temperature is within safe limit, "HIGH" approximately 10°C below Thermal shut down. Open collector (15V max, sink current 10mA max).	A1	B1		SIGNAL RETURN
7	AC_FAIL_1	Output signal of PS in position A1/B1. "Low" when input voltage is 85Vac<Vin<270Vac. "HIGH" when input voltage is 85Vac>Vin ot Vin>270Vac. Open collector (15Vmax, sink current 10mA max).	A1	B1		SIGNAL RETURN
8	DC_OK_1	Output signal of PS in position A1/B1. "LOW" when output voltage is higher than 85~95% of Vout setting. Open collector signal (15V max, sink current 10mA max). Tracking output setting, "LOW" when Vout>90+/-5% from output voltage setting.	A1	B1		SIGNAL RETURN
9,13,24	SIGNAL RETURN	Reference for: ENABLE, INHIBIT, TEMP_ALARM, AC_FAIL, DC_OK, +12V_AUX, SCL, SDA, SMB_ALERT. The SIGNAL RETURN is isolated from the output.	Output_A	Output_B		
10	INHIBIT_1	Input for PS in position A1/B1. Turns OFF Output_A1or B1 by electrical signal or dry contact. "SHORT" or 0~0.6V Output_A is OFF. "OPEN" or 2~15V - Output_A is ON.	A1	B1		SIGNAL RETURN
11	PS_EXIST_1	Output signal of PS in position A1/B1. SHORT to SIGNAL_RETURN_A/B when PS is inserted into the Rack.	A1	B1		SIGNAL RETURN
12	+12V_AUX	Output_ A/B. Auxiliary supply 11.2~12.5VDC. Max. output current: 0.5A. Not affected by any signal or fail state.	Output_A	Output_B		SIGNAL RETURN
17,18	CS	Current sharing signal. When HFE1600-D1U racks are connected in parallel, the CS_A/B pins of the units should be connected to allow current balance between units.	Output_A	Output_B		-SENSE
19	TEMP_ALM_2	Output signal of PS in position A2/B2. Same as Pin 6.	A2	B2		SIGNAL RETURN
20	AC_FAIL_2	Output signal of PS in position A2/B2. Same as Pin 7.	A2	B2		SIGNAL RETURN
21	DC_OK_2	Output signal of PS in position A2/B2. Same as Pin 8.	A2	B2		SIGNAL RETURN
22	INHIBIT_2	Output signal of PS in position A2/B2. Same as Pin 10.	A2	B2		SIGNAL RETURN
23	PS_EXIST_2	Output signal of PS in position A2/B2. Same as Pin 11.	A2	B2		SIGNAL RETURN
25	ENABLE_A	Input for Output_A/B. Turns ON Output_A/B by electrical signal or dry contact. "SHORT" or 0~0.6V – Output ON. "OPEN" or 2~15V – Output OFF.	Output_A	Output_B	Short	SIGNAL RETURN

1.2. J2 Pin Allocation Chart

J2 connector (RJ45 type) is used for parallel connection of two Racks.

Table 1.2 .a: **J2-A**

IN		Out	
Pin #	**Name**	**Pin #**	**Name**
1	Not connected	1	Not connected
2	Not connected	2	Not connected
3	Not connected	3	Not connected
4	-SENSE_A	4	-SENSE_A
5	SCL_A (PMBus)	5	SCL_A (PMBus)
6	SIGNAL_RETURN_A	6	SIGNAL_RETURN_A
7	SDA_A (PMBus)	7	SDA_A (PMBus)
8	SMB_ALERT_A	8	SMB_ALERT_A

Table 1.2.b: **J2-B**

IN		Out	
Pin #	**Name**	**Pin #**	**Name**
1	Not connected	1	Not connected
2	Not connected	2	Not connected
3	Not connected	3	Not connected
4	-SENSE_B	4	-SENSE_B
5	SCL_B (PMBus)	5	SCL_B (PMBus)
6	SIGNAL_RETURN_B	6	SIGNAL_RETURN_B
7	SDA_B (PMBus)	7	SDA_B (PMBus)
8	SMB_BLERT_B	8	SMB_BLERT_B

1.3. Output Bus Bar Connections

The HFE1600-D1U has two identical Output Bus Bar connections on both sides of Rear Panel. each Bas-bar connected different output.

ATTENTION: Maximum allowable current for each pair of Output Bus Bars – 266A.

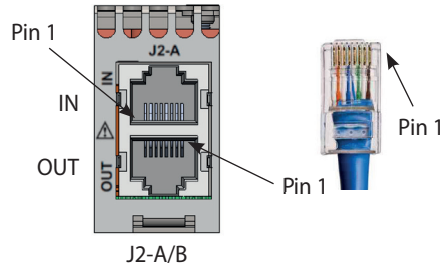

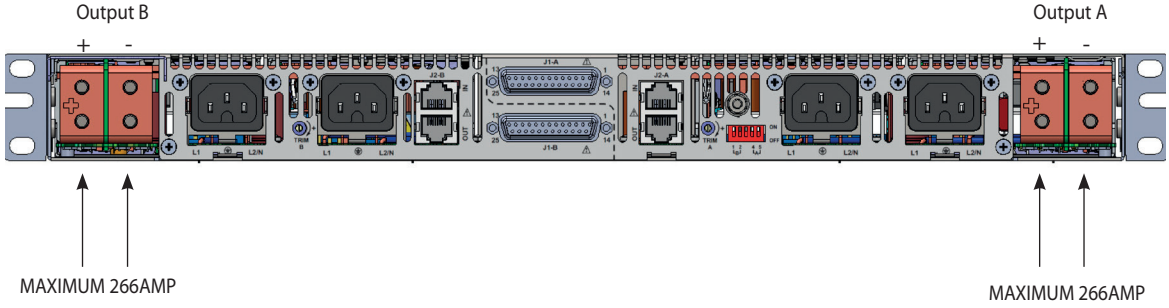

Fig 1.3a Output Bus-Bars.

Fig 1.3b Installation of Output Bus-Bars Protection Cover.

1.4. Output Voltage adjustment Trimmer

Output Voltage may be adjusted by the Rear Panel Trimmer.

Model	HFE1600-12	HFE1600-24	HFE1600-32	HFE1600-48
Output voltage range (V)	9.6~13.2	19.2~29.0	25.6~38.6	38.4~58

1.5. PMBus address

Each slot in the Rack (see fig-2.2) has its own address for PMBus communication Valid only if /S option power supply is being used. In case parallel connection of two racks is used, SW1 located at the rear panel is used to differentiate between addresses for the same slots.

see Table 1.5.A

Position In Rack	SW1-1	SW1-2	Address (Bin)
B1	ON	ON	1000
B2			1001
B1	ON	OFF	1010
B2			1011
B1	OFF	ON	1100
B2			1101
B1	OFF	OFF	1110
B2			1111

Table 1.5.B

Position In Rack	SW1-4	SW1-5	Address (Bin)
A1	ON	ON	0000
A2			0001
A1	ON	OFF	0010
A2			0011
A1	OFF	ON	0100
A2			0101
A1	OFF	OFF	0110
A2			0111

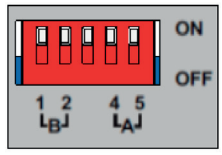

SW1

2. Rack mechanical features

2.1. Insertion and extraction of the PS

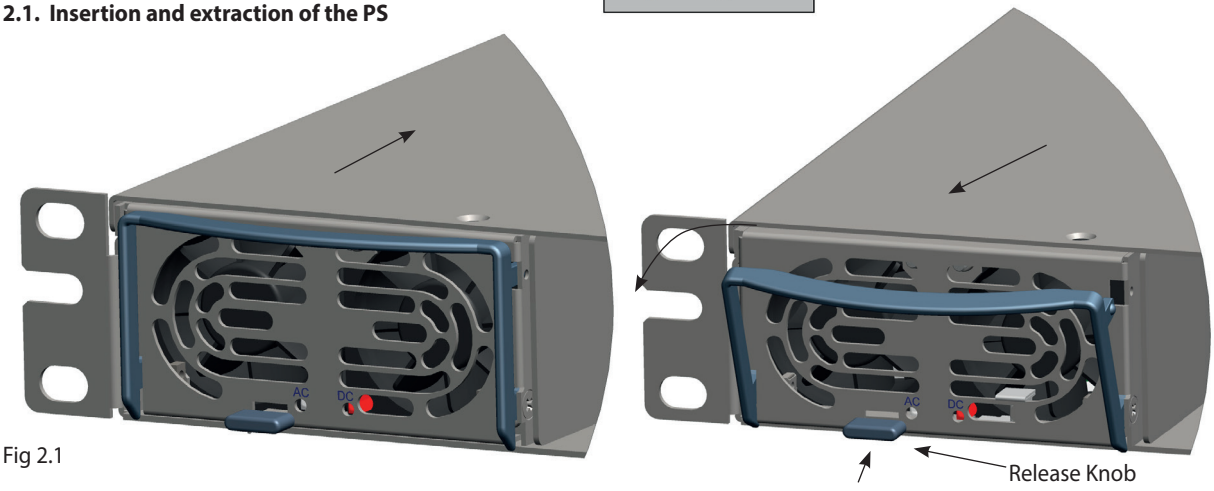

Fig 2.1

To insert the power supply push unit into the rack with extraction handle closed.

To extract power supply, elevate the release knob and pull the extraction handle simultaneously.

CAUTION

When inserting a power supply into the rack, do not use unnecessary force;
slamming the power supply into the rack can damage the connectors on the rear of the supply and inside the rack.

2.2. Definition of Power Supplies Position

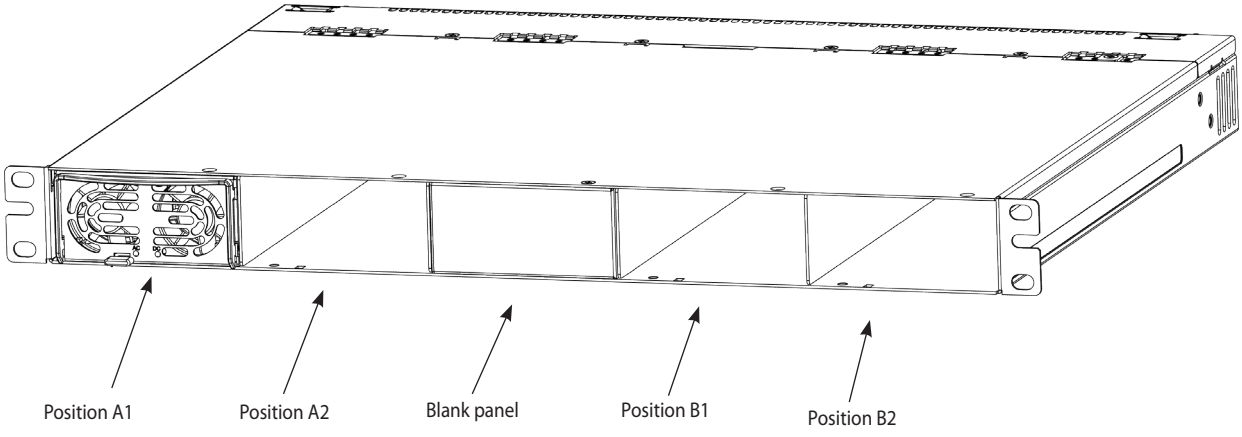

Fig 2.2 Power supply positions

2.3 Keying Option to define the Rack's Voltage

Keying Option can be installed to ensure that only the correct Power Supply can be inserted into the Rack.
The Key Option consists of two parts: Power Supply Key (one per unit Fig 2.3a) and Rack Keys (5 per Rack Fig 2.3b).
Power Supply Key and Rack Keys should be fixed (by Flat head screws M3x6) in position corresponding to Output Voltage.

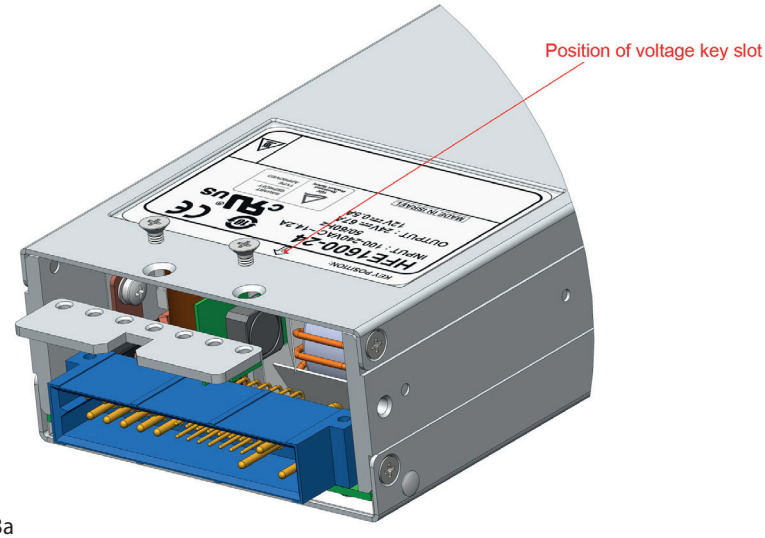

Fig 2.3a
Assembly of PS Key

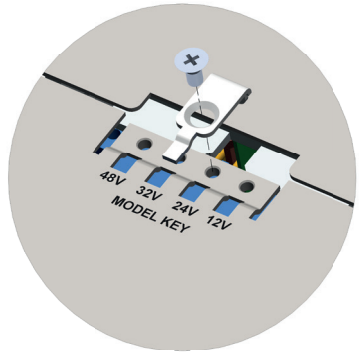

Fig 2.3b
Assembly of Rack Key (Rack Top View)

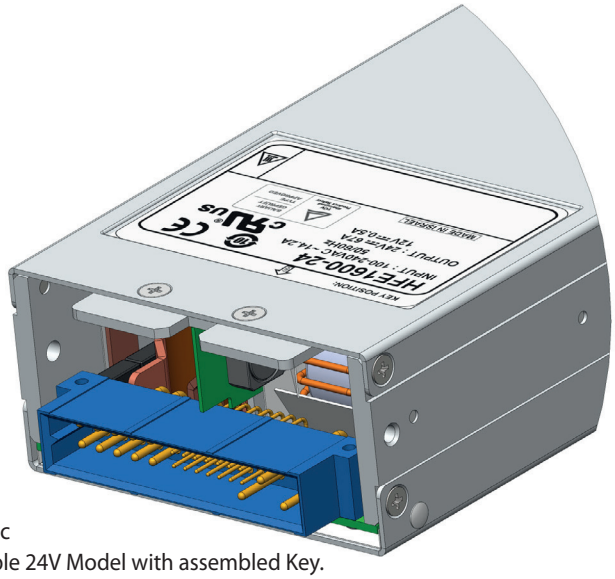

Fig 2.3c
Example 24V Model with assembled Key.

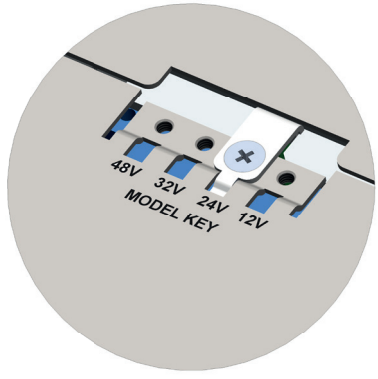

Fig 2.3d
Example Rack Key assembled for 24V power supplies

2.4 Blank Panel

In case all positions of the Rack are not filled with supplies, Blank Panel should be used to ensure proper Air Flow.
It is recommended to interleave supplies and Blank Panels wherever possible.

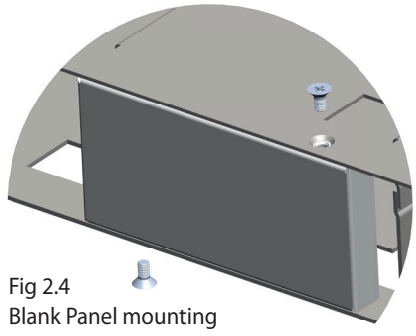

Fig 2.4
Blank Panel mounting

2.5 Rack's mounting options

Rack can be mounted into 19" Rack Cabinet which suits both USA and European Standards:

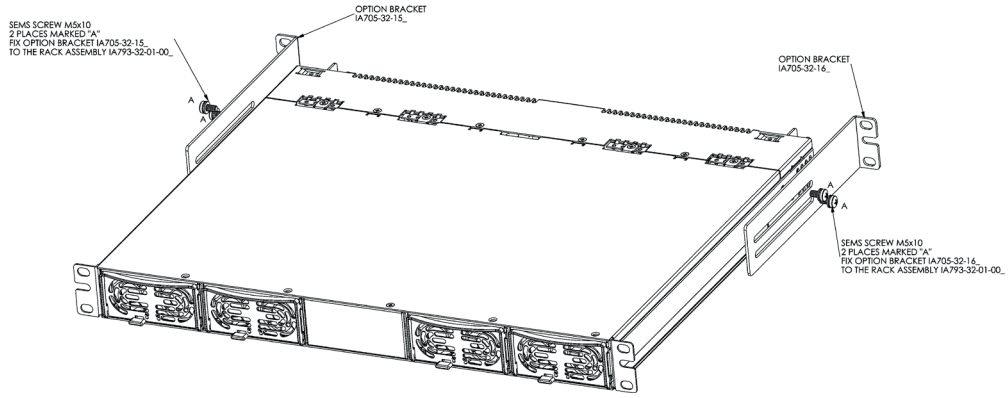

Fig 2.5 Mounting options, brackets and screws are included.

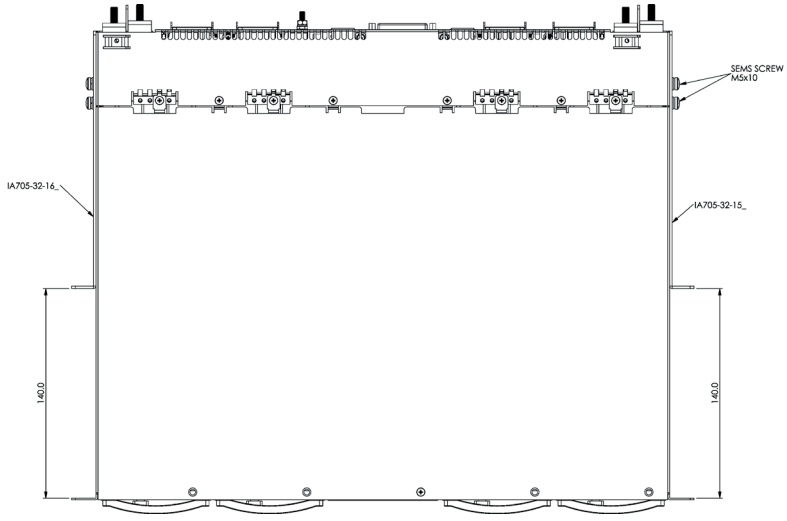

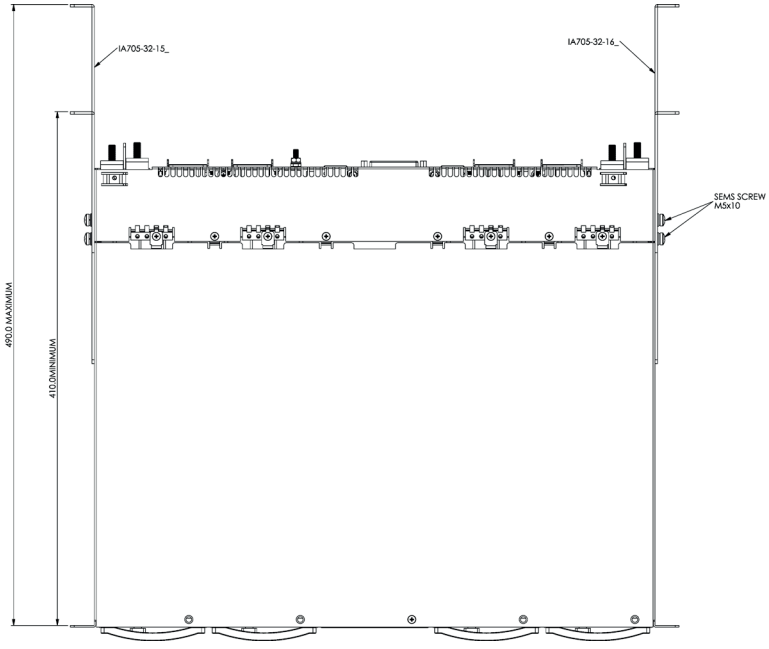

3. Typical applications

3.1 Basic connection (Position A shown)

For basic connection the supplied Control Plug should be inserted to J1-A.

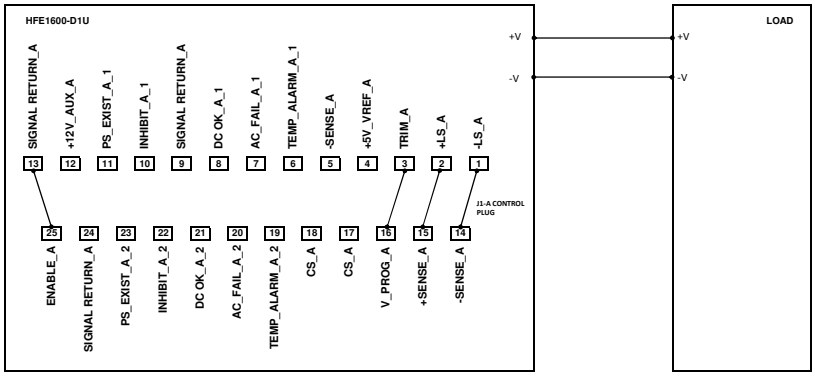

Fig 3.1 Basic connection diagram.

3.2 Remote sensing (Position A shown)

ATTENTION:

1. Maximum voltage drop on load wires: HFE1600-12: 0.25V/wire, HFE1600-24: 0.5V/wire, HFE1600-32: 0.75V/wire, HFE1600-48: 1V/wire.
2. Twisted wires should be used for Remote Sensing connection.
3. If Remote Sensing is used do not break Main Output connection.

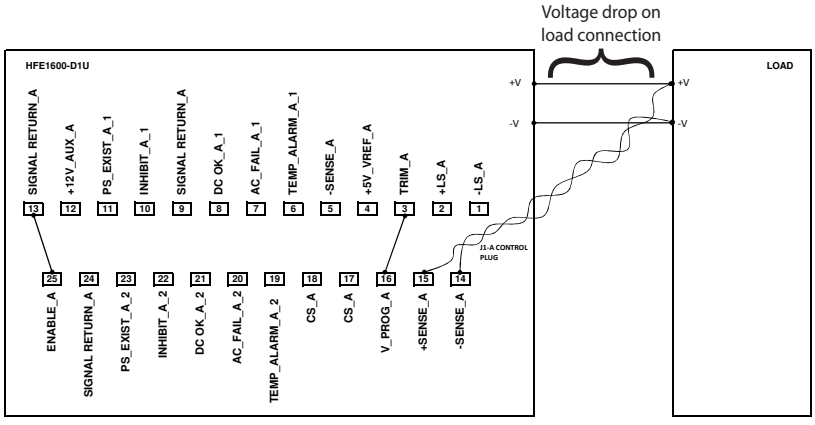

Fig 3.2 Remote Sensing connection diagram

3.3 On/Off control for the entire Rack (Position A shown)

Switch closed: Output ON
Switch open: Output OFF

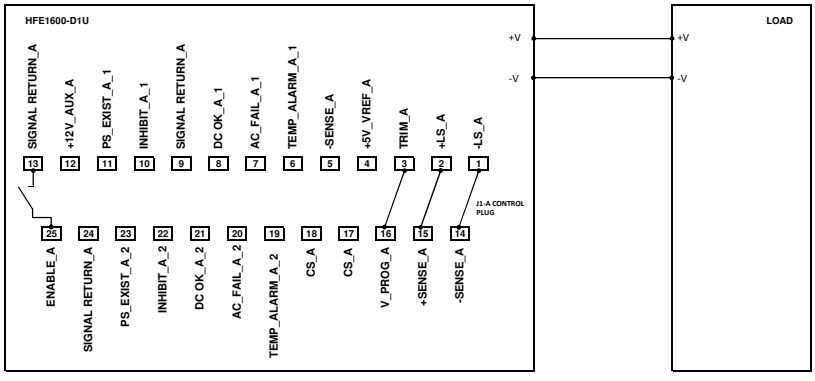

Fig 3.3 Entire rack On/Off control diagram.

3.4 Individual On/Off control for each PS (Position A shown)

Switch closed: Output OFF
Switch open: Output ON

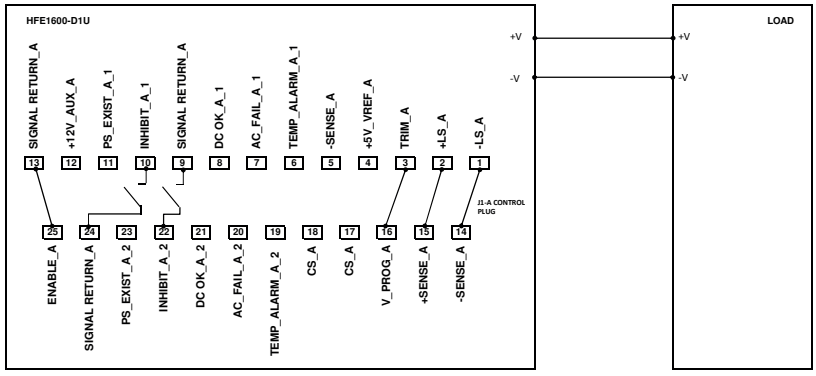

Fig 3.4 individual units On/Off diagram.

3.5 Supervisory signals (Position A shown)

Following signals are accessible from each power supply at J1:
DC OK
AC FAIL
PS EXIST
TEMP ALARM
These signals are Open Collector type (max 15V, max 10mA), isolated from Output and referenced to SIGNAL RETURN.

Fig 3.5 presents example of the typical connection for DC OK signal of power supply in position A2.
Instead of 12V AUX, external Supply of 15V max. can be used with recommended Pull-up resistors for 5mA max.

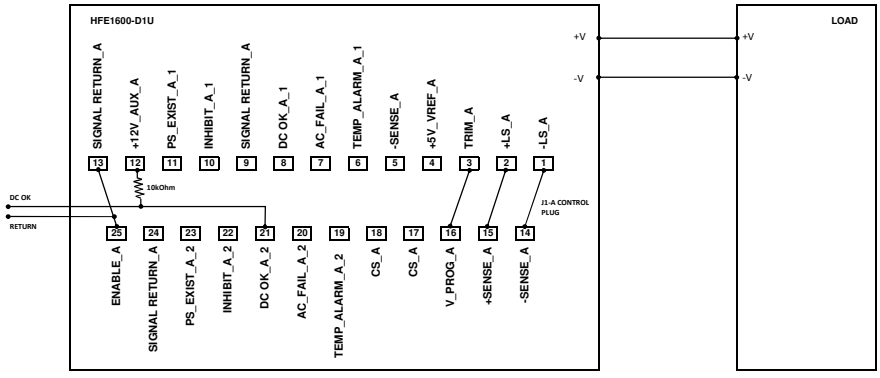

Fig 3.5 "DC OK" signal connection diagram for Power Supply in Position A2 .

3.6 Output Voltage programming by External Voltage (Position A shown)

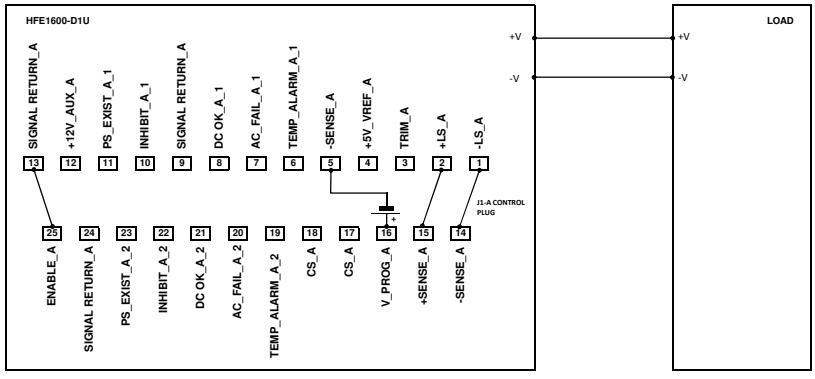

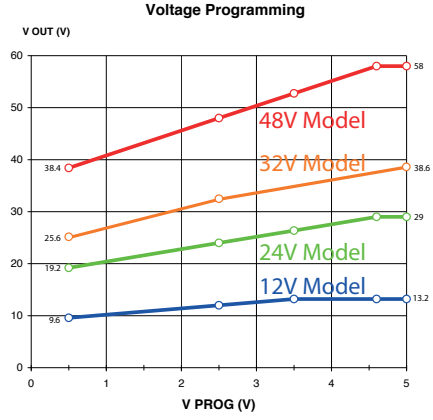

Fig 3.6 Output Voltage programming by External Voltage.

3.7 Output Voltage programming by PMBus (Position A shown)

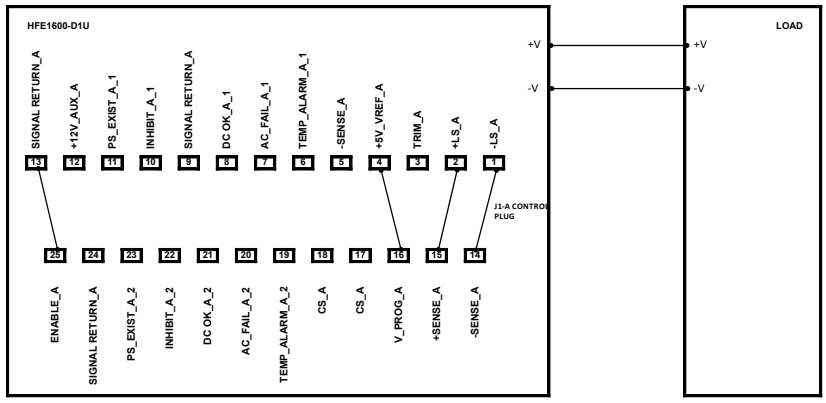

Fig 3.7 Output Voltage programming by PMBus

3.8 PMBus Host connection

To connect the rack to the Host computer connect communication cable (refer to table 3.8 for cable connection) between J2-A/J2-B and computer:

Table 3.8 PMBus Cable.

Signal Name	Pin J2-A/J2-B	Wire (AWG)	To Host	Note
SCL	5	22~24	-	Twisted pair
SIGNAL_RETURN	6	22~24	-	
SDA	7	22~24	-	Twisted pair
SMB_ALERT	8	22~24	-	

RJ45 Shielded Male Connector should be used.

Cable must be shielded; only connector shield is connected to cable shield.

3.9 Parallel connection of two Racks (Position A shown)

To connect two Racks in parallel for higher Output Current:

- Connect Main Outputs (Bus-Bars) in parallel. Make the connections as short as possible and with equal length.
- Connect Senses (twisted pairs) to Load point.
- Connect J2-A connectors of both Racks by Cable (cable construction see Table 3.9).
- Slave - Disconnect connection between VPROG and TRIM (J1.3 and J1.16).
- Slave - Switch SW1 to "OFF" position (applicable for HFE1600-xx /S PMBus option). For addressing refer to Table 1.5.A/B
- Output Voltage could be adjusted by the trimmer on Master Rack.

Table 3.9 Rack Interconnection Cable.

Signal Name	From pin	Wire (AWG)	To Pin	Note
-SENSE	4	22~24	4	Twisted pair
SCL	5	22~24	5	Twisted pair
SIGNAL_RETURN	6	22~24	6	
SDA	7	22~24	7	Twisted pair
SMB_ALERT	8	22~24	8	

RJ45 Shielded Male Connectors should be used.
Cable must be shielded; only connector shields are connected to cable shield.

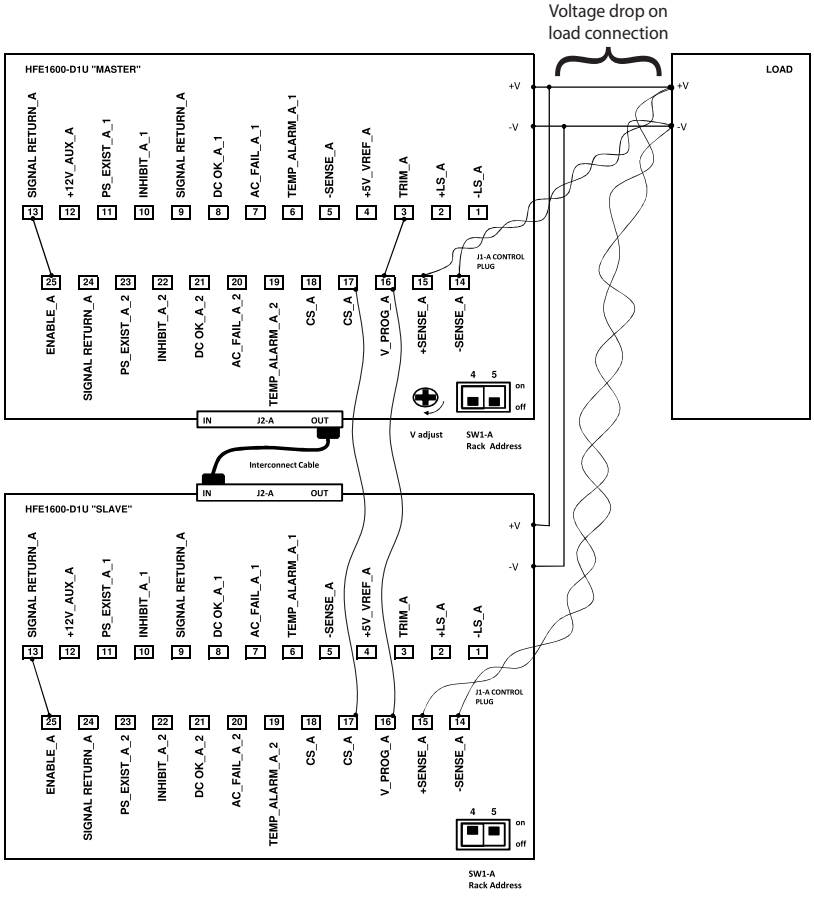

Fig 3.9 Racks parallel connection diagram.

NOTE

For PMBus OPTION in the master rack
1. Disconnect Pin 3&16
2. Connect Pin 4&16

3.10 Series Rack connection

Up to 2 racks with the same number of power supplies and rating (voltage and current) can be used to increase the output voltage.
To connect two Racks in series:

- Connect Main Outputs (bus bars) in series;
- Connect Senses (twisted) to Load point (as shown in fig-3.10), or Local Sensing using supplied Control Plugs.
- In case PMBus is used Connect J2 connectors of both Racks by Interconnect Cable for Serial connection (cable construction see Table 3.10);

CAUTION

Do not use Cable as of Table 3.9.

- On one Rack Switch SW1 up to OFF position (only for HFE1600-xx /S PMBus option), Addressing see Table 1.5;
- Output Voltage can be adjusted by potentiometers on both Racks.

Table 3.10 Rack Interconnection Cable for Serial connection.

Signal Name	From pin	Wire (AWG)	To Pin	Note
-SENSE	4	Open	4	Do not connect!
SCL	5	22~24	5	Twisted pair
SIGNAL_RETURN	6	22~24	6	
SDA	7	22~24	7	Twisted pair
SMB_ALERT	8	22~24	8	

RJ45 Shielded Male Connectors should be used. Cable must be shielded; only connector shields are connected to cable shield.
Diodes should be connected in parallel with each unit output to prevent reverse voltage. Each diode should be rated to at least the power supply rated output voltage and output current.

WARNING

Do not connect -SENSE and any signals referenced to -SENSE between two Racks. Only signals referenced to SIGNAL RETURN can be connected between Racks.

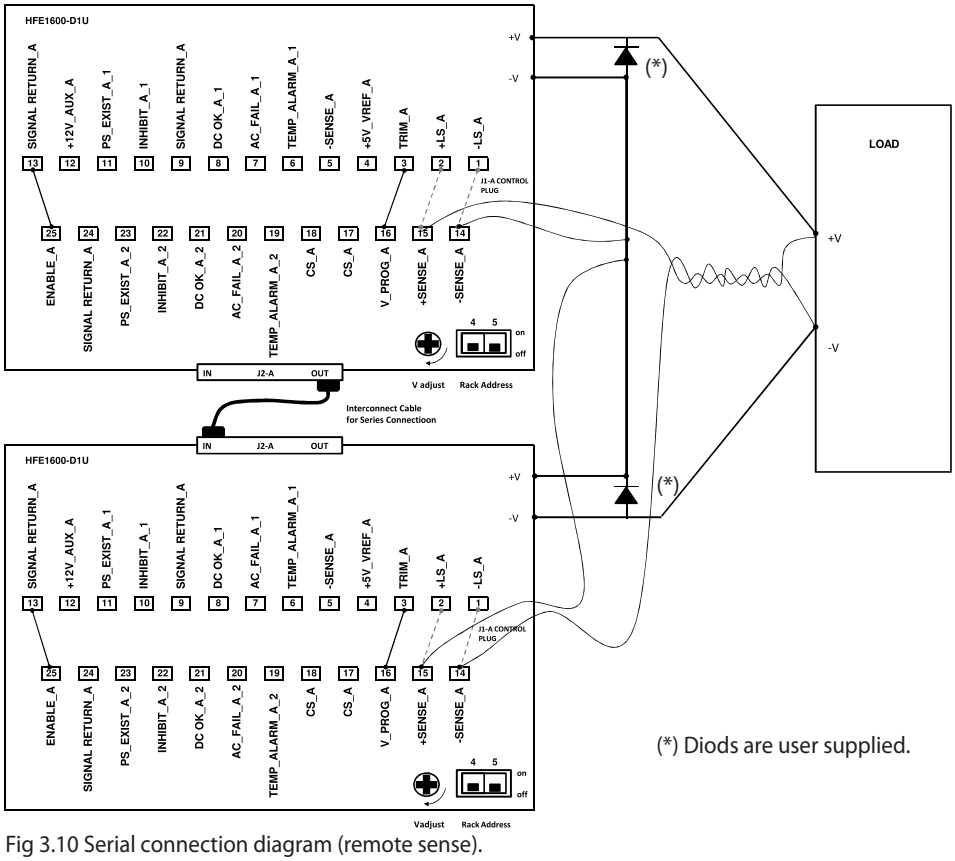

Fig 3.10 Serial connection diagram (remote sense).

HFE 1600 - D1U Outline Drawing

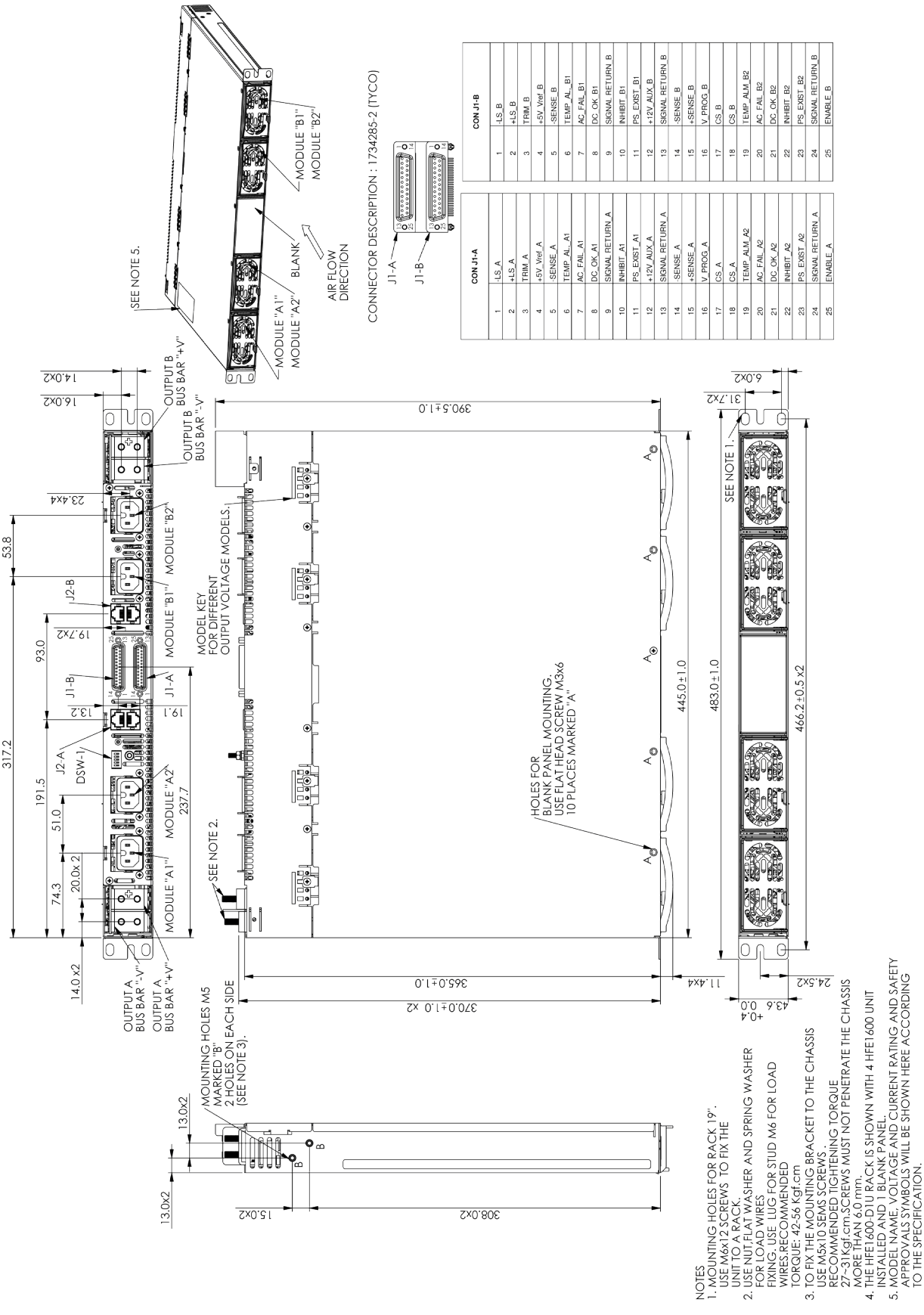

HFE 1600 - D1U-TB Outline Drawing

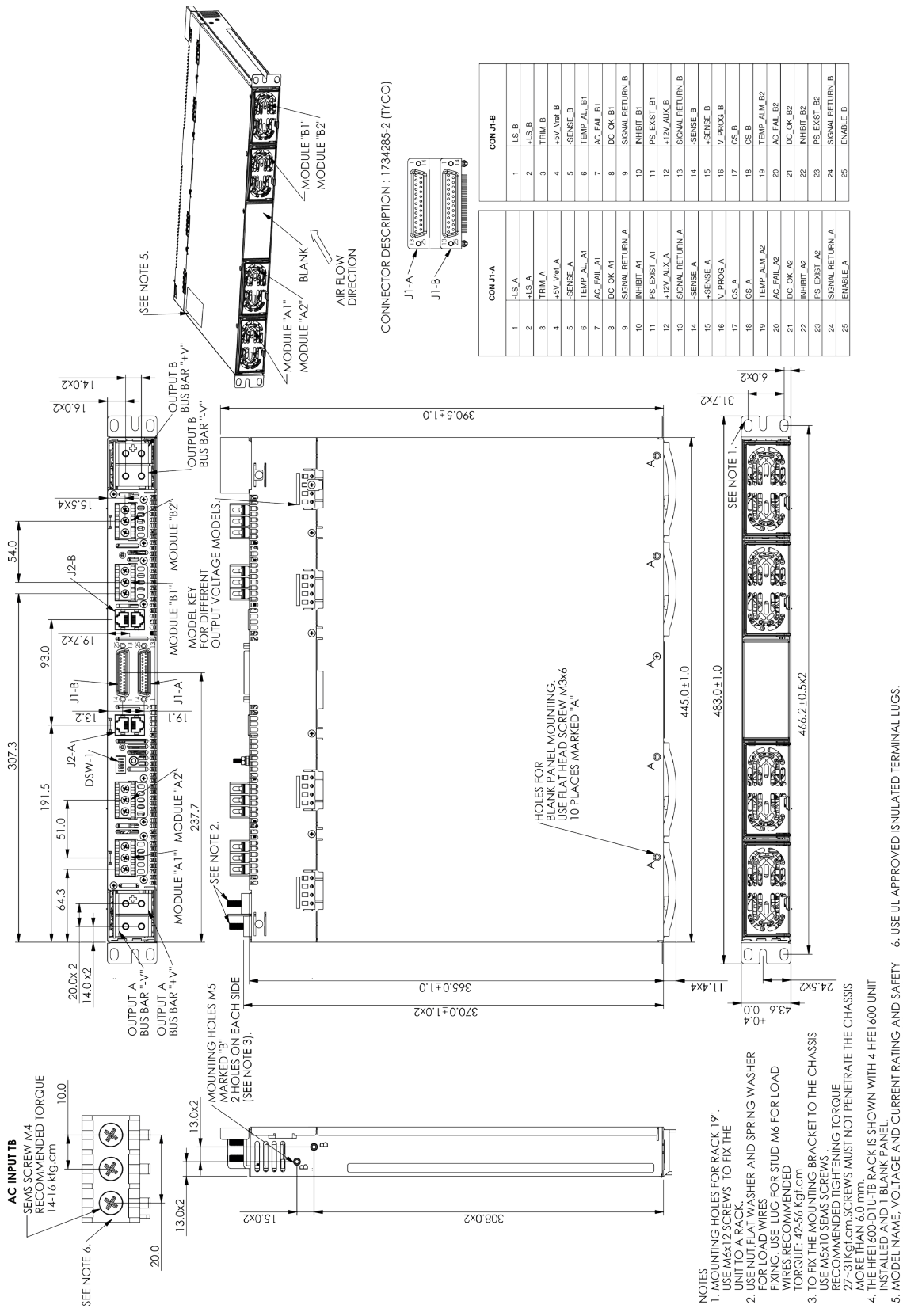

CON J1-A	
1	-LS_A
2	+LS_A
3	TRIM_A
4	+5V Vref_A
5	-SENSE_A
6	TEMP_AL_A1
7	AC_FAIL_A1
8	DC_OK_A1
9	SIGNAL RETURN_A
10	INHIBIT_A1
11	PS_EXIST_A1
12	+12V_AUX_A
13	SIGNAL RETURN_A
14	-SENSE_A
15	+SENSE_A
16	V PROG_A
17	CS_A
18	CS_A
19	TEMP_ALM_A2
20	AC_FAIL_A2
21	DC_OK_A2
22	INHIBIT_A2
23	PS_EXIST_A2
24	SIGNAL RETURN_A
25	ENABLE_A

CON J1-B	
1	-LS_B
2	+LS_B
3	TRIM_B
4	+5V Vref_B
5	-SENSE_B
6	TEMP_AL_B1
7	AC_FAIL_B1
8	DC_OK_B1
9	SIGNAL RETURN_B
10	INHIBIT_B1
11	PS_EXIST_B1
12	+12V_AUX_B
13	SIGNAL RETURN_B
14	-SENSE_B
15	+SENSE_B
16	V PROG_B
17	CS_B
18	CS_B
19	TEMP_ALM_B2
20	AC_FAIL_B2
21	DC_OK_B2
22	INHIBIT_B2
23	PS_EXIST_B2
24	SIGNAL RETURN_B
25	ENABLE_B

NOTES
1. MOUNTING HOLES FOR RACK 19". USE M6x12 SCREWS TO FIX THE UNIT TO A RACK.
2. USE NUT,FLAT WASHER AND SPRING WASHER FOR LOAD WIRES FIXING. USE LUG FOR STUD M6 FOR LOAD WIRES RECOMMENDED TORQUE: 42-56 Kgf.cm
3. TO FIX THE MOUNTING BRACKET TO THE CHASSIS USE M5x10 SEMS SCREWS , RECOMMENDED TIGHTENING TORQUE 27~31Kgf.cm.SCREWS MUST NOT PENETRATE THE CHASSIS MORE THAN 6.0 mm.
4. THE HFE1600-D1U-TB RACK IS SHOWN WITH 4 HFE1600 UNIT INSTALLED AND 1 BLANK PANEL.
5. MODEL NAME, VOLTAGE AND CURRENT RATING AND SAFETY APPROVALS SYMBOLS WILL BE SHOWN HERE ACCORDING TO THE SPECIFICATION.
6. USE UL APPROVED ISNULATED TERMINAL LUGS.