HDMS

Single phase dynamic motor starter

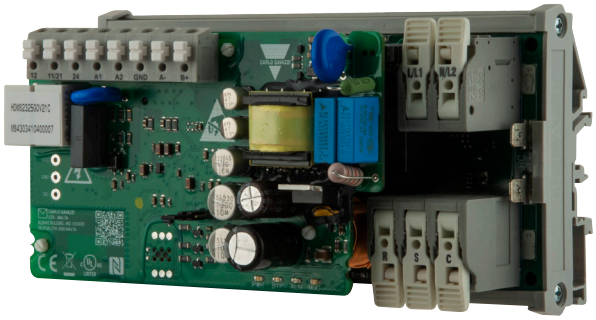

Description

HDMS is a dynamic motor starter for single phase scroll compressors and submersible pumps.

Through an innovative control strategy, Capacitor Start-Capacitor Run (CSCR), motors, can now be started without a start capacitor. In case of Permanent Split Capacitor (PSC) motors, the starting current is virtually eliminated.

All the **HDMS** PCBs have conformal coating for higher resistance to harsh environmental conditions.

The ramp-up time is limited to a maximum of 1 second making it an ideal solution for scroll compressors and submersible pumps.

Benefits

- **No start capacitor required*.** More reliability for your systems especially in weak grids.
- **Cost savings.** HDMS achieves an exceptional current reduction with respect to traditional soft starters. Lower starting current helps you save on utility contracts.
- **Less over-rating for generator driven loads.** The starting current is limited to < 1.8 HDMS nominal current. This lower start current reduces the starting VA required. In case of generators, lower power generators can be used.
- **No settings required.** Optimal starts in every condition without the need for user adjustments.
- **Adapts to load conditions.** The self-learning algorithm automatically adjusts the internal start parameters in case of unbalanced pressures.
- **Faster installation.** Tool-free terminals ensure a much faster and easier installation.
- **Motor overload protection (Class 10).** Built-in thermal model for Class 10 overload protection.
- **Integrated protection.** Diagnostic functions provide additional protection against abnormal operating conditions.
- **Complete monitoring.** The HDMS is equipped with a Modbus/RTU communication port by 2-wire RS485 connection for real time monitoring of critical parameters.
- **NFC history file download.** Through the NFC communication, users can download data of the very first 8 starts and the last 24 starts performed by HDMS. Download can be done via (Android based) smartphones and tablets or PC.
- **Faster troubleshooting.** HDMS stores the last 143 alarm events information to facilitate troubleshooting.

*load conditions apply

Applications

Scroll compressors, submersible pumps

Main features

- Limits the starting current for single phase scroll compressors and submersible pumps
- Reduces light flickering when motor starts
- Monitors supply and load conditions to protect your motors in case of abnormal operation
- SCR bypassed main relay for longer lifetime

Order code

HDMS 23 □ G0 V2 □ □

Enter the code entering the corresponding option instead of □.

Code	Option	Description	Comments
H	-	High Dynamic Motor Starter	
D	-		
M	-		
S	-	Single phase control	
23	-	110 – 230 VAC +10%, -15%	Operational voltage (Ue)
□	12	12 Arms	Rated operational current at 65ºC (40ºC for 25 Arms model)
	25	25 Arms	
	32	32 Arms	
	37	37 Arms	
G	-	110 – 230 VAC +10%, -15%	Control signal
0	-	Internally supplied (via L/L1 – N/L2)	
V	-	Versions	
2	-	2 relay outputs	
□	0	Panel mounting (on request)	
	1	DIN rail mounting	
□	-	No option	Only for 12 Arms models
	C	Modbus RTU	

Selection guide

Rated operational current (Ie)	Versions	Ordering code (Mounting: Panel)	Ordering Code (Mounting: DIN)
12 Arms	No Modbus	HDMS2312G0V20	HDMS2312G0V21
	Modbus	HDMS2312G0V20C	HDMS2312G0V21C
25 Arms	Modbus	HDMS2325G0V20C	HDMS2325G0V21C
32 Arms	Modbus	HDMS2332G0V20C	HDMS2332G0V21C
37 Arms	Modbus	HDMS2337G0V20C	HDMS2337G0V21C

Selection guide

Category	Type	Model selection
Pumps	Submersible	Choose HDMS model according to the current rating of the pump.
Compressors	Scroll	Model selection depends on the LRA to I_{MAX} ratio. See table below for more detailed information.

Category	Type	Locked rotor amps (LRA)	Maximum operating current (I_{MAX})	X/Y Ratio (LRA/ I_{MAX})	Model selection
Compressors	Scroll	X	Y	< 5	No over-rating Choose HDMS model according to the compressor rated current
				≥ 5 and < 7	Over-rate HDMS by 1 model size
				≥ 7	Over-rate HDMS by 2 model sizes

Note: For compressor models Copeland ZH13KVE and ZH38K4E an additional start capacitor (approx. 100 µF, 300 V) may be required if starts are not done at balanced pressures.

Example:

Selection guide

Manufacturer	Model	Locked rotor amps (LRA)	Maximum operating current (I_{MAX})	LRA/I_{MAX}	Item code
Copeland	ZH21K4E-PFJ	76.0	18.5	4.11	HDMS2325G0V2.C
	ZH13KVE-PFJ	160.0	30.0	5.33	HDMS2337G0V2.C
Mitsubishi Heavy Industries	AEH60VEXMT	121.0	15.3	7.91	HDMS2332G0V2.C

Note: The above selection guide is provided as a reference to help you with the correct model selection. In case of any doubt please contact your Carlo Gavazzi representative.

Further reading

Information	Where to find it	
HDMS Trouble-shooting guide	http://www.gavazziautomation.com/document/manual/mc_hdms_qsg.pdf	
Modbus commu-nication protocol	http://gavazziautomation.com/document/manual/mc_hdms_Modbus_manual.pdf	
NFC mobile phone application	https://play.google.com/store/apps/details?id=mt.com.carlogavazzi	
HDMS configura-tion software	http://gavazziautomation.com/images/pim/OTHERSTUFF/HDMS_CGS3_SETUP_FILE.zip	-
CAD drawings (HDMS..V20)	http://www.productselection.net/DXF/MC_HDMS_V20.zip	
CAD drawings (HDMS..V21)	http://www.productselection.net/DXF/MC_HDMS_V21.zip	

Carlo Gavazzi compatible components

Purpose	Component name/code	Notes
PCB standoffs	HDMS_SMA_ADAPTER_X50	50 pcs per box
DIN rail accessory	HDMS_DIN	1 pc per box
Booster kit	CF30A002240VAC	Electromechanical relay to disengage start capacitor (for booster kit option only)

Structure

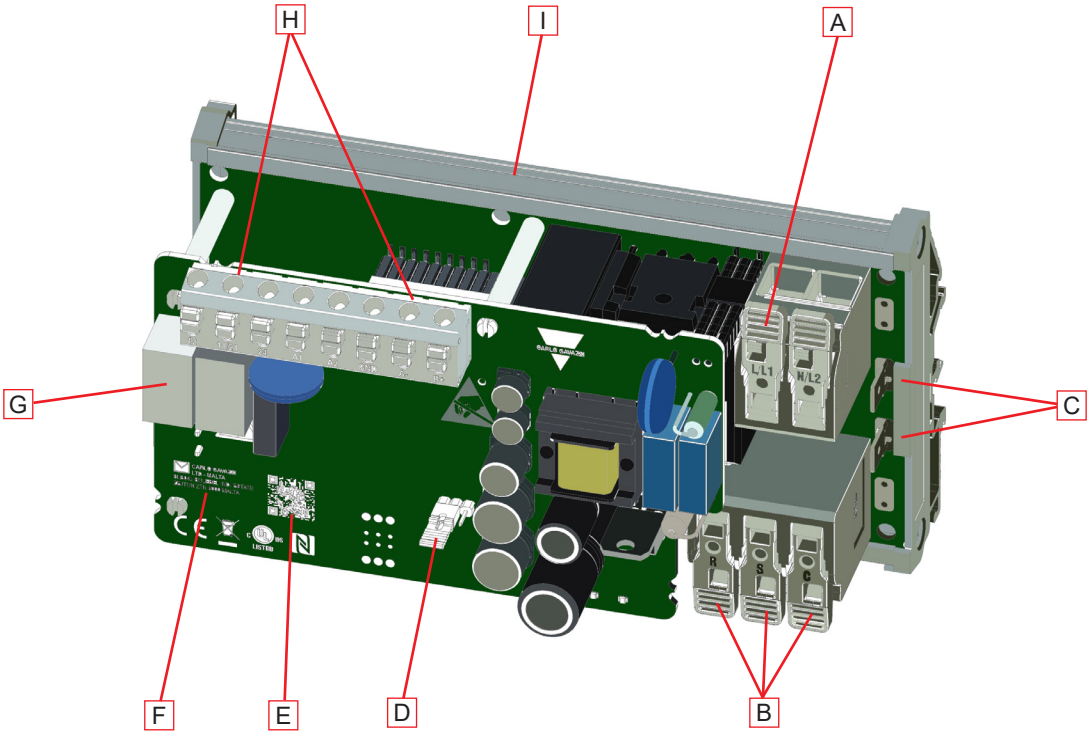

Element	Component	Function
A	Mains input terminals	Supply for the HDMS internal electronics. Single phase main input. L/L1 - Live wire N/L2 - Neutral (or L2 connection)
B	Load output terminals	Connection to motor. R - Main winding S - Start winding C - Common
C	Run capacitor connection	RC_1, RC_2 faston connection for run capacitor
D	Jumper	Depending on position, user can shift the Modbus slave address by 1
E	QR code	Scan to link to troubleshooting guide
F	NFC antenna	Contactless readout of internal memory from NFC enabled device
G	Auxiliary relays (programmable)	Normally open for top of ramp indication (21, 24) Normally closed relay for alarm indication (11, 12)
H	Auxiliary connections	Terminal block for control input (A1, A2), relay output (11, 12, 21, 24) and Modbus (GND, A-, B+)
I	DIN clip	Provides an easy connection to 35 mm DIN rail

Mode of operation

The HDMS series of soft starters is designed for single phase motors with a maximum start time of 1 second. It works on an innovative, self-learning algorithm (patent pending) so that no external user adjustments are required. Thanks to its advanced control strategy the HDMS does not require any start capacitor to control capacitor-start-capacitor-run (CSCR) motors. This results in fewer reliability problems within the voltage sensing relays and start capacitors (when hard-start kits are used) and less model variants when replacing traditional single phase soft starters.

The HDMS is shipped from Carlo Gavazzi with a set of default settings for current limit equivalent to 1.5 to 1.8 times the rated HDMS current. During every motor start, the HDMS makes a number of measurements and adjusts its internal parameters to reduce the starting current during the subsequent motor start. This self-learning routine is active at every start resulting in an optimal motor starting even when the load conditions change and also when the motor ages.

If the excess ramp-up time alarm (6 flashes) is triggered, the HDMS will store the value of the current limit at which this alarm was triggered (ISP_{AL}). As a result of this condition, the HDMS will set a minimum current limit setpoint (ISP_{MIN}) equivalent to 1.25 x ISP_{AL} for all subsequent starts. The next start attempt, following an excess ramp-up time alarm, will be done at 1.5 x Ie (rated HDMS current). The value of ISP_{MIN} can be reset via Modbus.

The ramp-up time is automatically limited to a maximum of 1 second making the HDMS ideal for scroll compressors and submersible pump applications.

A unique function within the HDMS is the high pressure (HP) function. The HP function is designed to detect a locked rotor condition during start. In this event, the HDMS will trigger the HP function and increase the “self-learnt” current limit to a maximum of 1.5 to 1.8 times the nominal current of the HDMS to try to start the motor within 1 second. Should this not be enough the HDMS will activate the end of ramp alarm to protect the bypass relay from switching a high load current.

The alarms follow an automatic recovery routine to re-start the motor in case the alarm condition is cleared. This feature further reduces the machine downtime and user intervention in case of recoverable alarms.

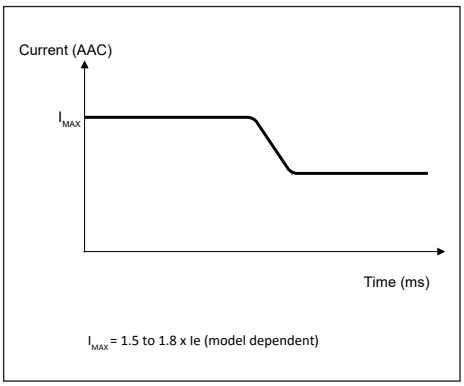

Start 1

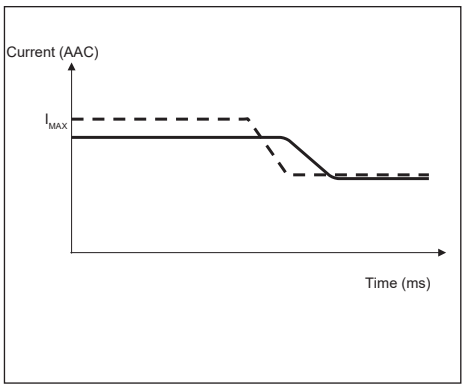

Start 2

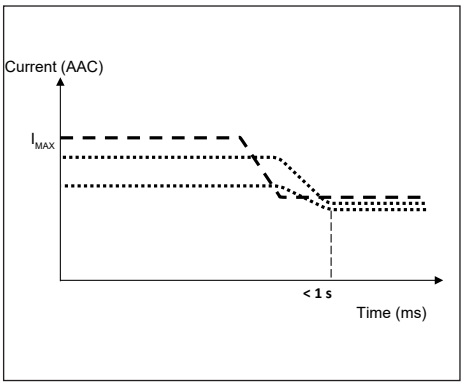

Start 3

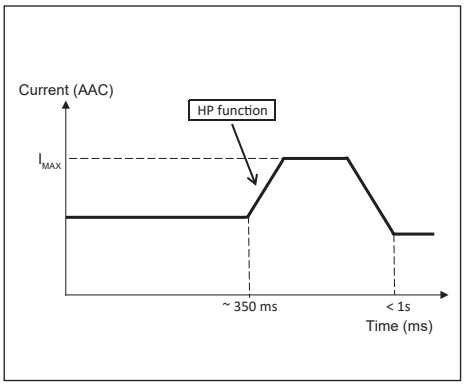

Start 4

Features

General

Assembly	DIN or Panel
Protection grade	IP00
Conformal coating	Yes
Cooling type	Natural convection
Weight	approx. 500 g
Overvoltage category	III

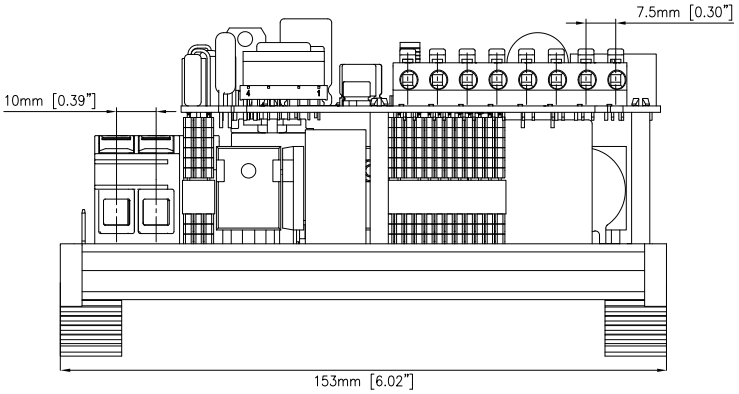

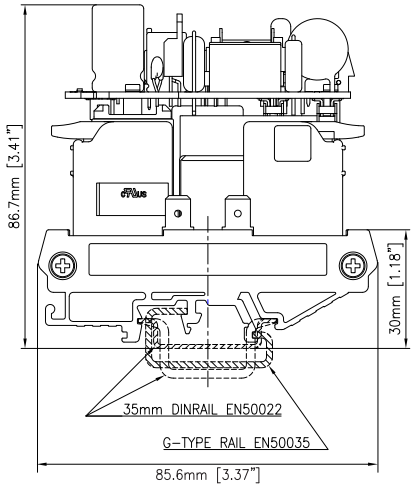

HDMS....V21. version

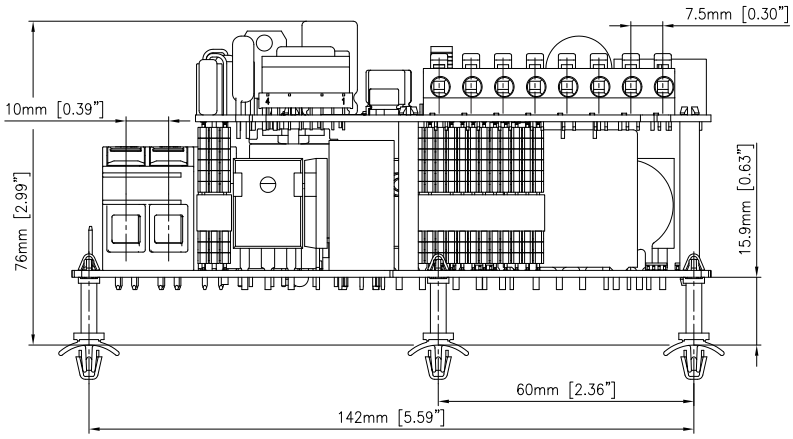

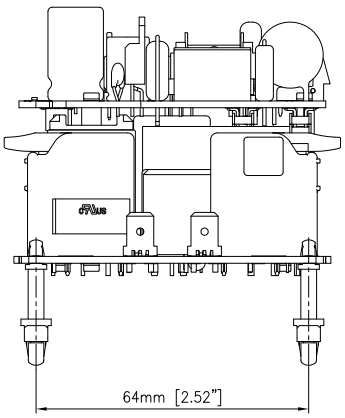

HDMS...V20. versions

Settings

Ramp-up time	1 sec (non-adjustable)
Ramp-down time	0 sec (non-adjustable)
Initial torque	Automatically determined by HDMS
FLC setting	Default: Ie (soft starter rated current) Can be changed via Modbus only
Modbus device address	Base address: 0 (default) Adjustable to Base address (+ 1) via jumper on PCB Additional addresses can be selected via Modbus

Power Supply

Operational voltage range	93.5 – 253 VACrms
Supply current at idle	< 30 mArms
Rated AC frequency	50/60 Hz (+/- 10%)
Rated insulation voltage	275 VAC
Dielectric withstand voltage: Supply to input	1.5 kVrms
Integrated varistor	Yes

Environmental

Working temperature	-20ºC to + 65ºC (-4ºF to + 149ºF)
Storage temperature	-40ºC to + 80ºC (-40ºF to +176ºF)
Relative humidity	< 95% non-condensing @ 40ºC
Pollution degree	2
Installation category	III
Installation altitude	1000 m (without derating)
Vibration	Acc. to IEC/EN 60068-2-6 Fc 10 Hz to 150 Hz at 0.5 g (5 m/s^2) constant acceleration
Shock	Acc. to IEC/EN 60068-2-27 15 g (150 m/s^2), 11 ms pulse duration 3 shocks per plane, half sine positive and negative

Compatibility and conformity

Conformance	EN/IEC 60947-4-2 UL 60947-4-2
Approvals	CE c UL us LISTED

Electromagnetic compatibility (EMC) - immunity	
Electrostatic discharge (ESD) Immunity	EN/IEC 61000-4-2 8 kV air discharge, 4 kV contacts
Radiated radio frequency Immunity	EN/IEC 61000-4-3 10 V/m from 80 MHz to 1 GHz (PC1) 10 V/m from 1 GHz to 2.7 GHz (PC1)
Electrical Fast Transient (Burst) Immunity	EN/IEC 61000-4-4 Output: 2 kV (5 kHz) (PC2) 4 kV (5 kHz) (PC2) AC input: 2 kV (5 kHz) (PC1) Signal and control: 2 kV (5 kHz) (PC1) Modbus: 2 kV (5 kHz) (PC1)
Conducted Radio Frequency	EN/IEC 61000-4-6 10 V/m from 0.15 to 80 MHz
Electrical Surge	EN/IEC 61000-4-5 Output, line to line: 1 kV (PC1) Output, line to earth: 2 kV (PC1) AC input, line to line: 1 kV (PC2) AC input, line to earth: 2 kV (PC2) Signal and control, line to earth: 1 kV (PC2) Modbus: Ground to earth: 2 kV (PC2) A and B to earth: 2 kV (PC2)
Voltage Dips	0% for 10 ms (PC1) 0% for 20 ms (PC1) 40% for 100 ms (PC1) 40% for 200 ms (PC1) 40% for 1000 ms (PC1) 70% for 10 ms (PC1) 70% for 500 ms (PC1) 80% for 5000 ms (PC2) 0% for 5000 ms (PC2)

Electromagnetic compatibility (EMC) - emissions	
Radio Interference field emission (Radiated)	EN/IEC 55011 Class B (residential): from 30 to 1000 MHz
Radio interference field emissions (conducted)	EN/IEC 55011 Class B (residential): from 0.15 to 30 MHz
Clicks*	EN/IEC 55014 Pass (exception 4)
Flicker*	12 Arms: IEC/EN 61000-3-11 Clause 4b where the service current capacity I ≥ 100 A 25, 32, 37 Arms: IEC/EN 61000-3-11 Clause 4a (Z_{MAX}) is 0.243 ohm [4 starts/hr]
Harmonics	12 Arms: IEC/EN 61000-3-2 25, 32, 37 Arms: IEC/EN 61000-3-12

* At rated starts per hour. Load conditions apply.

- Performance Criteria 1 (PC1): No degradation of performance or loss of function is allowed when the product is operated as intended.
- Performance Criteria 2 (PC2): During the test, degradation of performance or partial loss of function is allowed. However when the test is complete the product should return operating as intended by itself.

Inputs

Control voltage (Uc)	110 – 230 VAC +10%, -15%, 50/60 Hz
Control voltage range (Uc)	93.5 – 253 VAC
Maximum pick-up voltage	80 VAC
Minimum drop out voltage	18.5 VAC
Supply voltage range (Us)	(Internally supplied) via L/L1 – N/L2
AC frequency range	45 – 66 Hz
Rated insulation voltage (Ui)	275 VAC
Dielectric strength: **Dielectric withstand voltage** **Rated impulse withstand voltage**	 1.5 kVrms 1.5 kVrms
Control input current	5 mArms
Input to output response time	200 ms (if mains already present) 1.2 s (if control is applied together with mains)
Integrated varistor	Yes

Outputs

	HDMS..12	HDMS..25	HDMS..32	HDMS..37
Overload cycle @ 40ºC surrounding temperature (acc. to IEC/EN 60947-4-2)	AC53b: 1.5-1:359	AC53b: 1.5-0.6:360	AC53b: 1.7-0.7:360	AC53b:1.8-0.7:360
Maximum number of starts/hr @ rated overload cycle @ 40ºC surrounding temperature	10			
Rated operational current @ 40°C	12 Arms	25 Arms	32 Arms	37 Arms
Rated operational current @ 65°C	12 Arms	16 Arms	32 Arms	37 Arms
Minimum load current	1 Arms	1 Arms	5 Arms	5 Arms
Blocking voltage	1200 Vp			

Auxiliary relays

Number of output relays	2
Function of relays	Alarm, Bypassed (top of ramp) indication
Rated operational voltage	250 VAC / 30 VDC
Rated insulation voltage	250 VAC
Dielectric withstand voltage	2.5 kV
Overvoltage category	II
Type of control circuit	Electromechanical relay
Number of contacts	Alarm and bypassed: 1
Type of contacts	Alarm (normally closed, NC) Bypassed (normally open, NO) Note: relay logic may be changed via Modbus
Type of current	AC / DC
Rated operational current	3 Arms @ 250 VAC 3 Arms @ 30 VDC (resistive loads)

Modbus RTU

Type	Bi-directional (static and dynamic variables and parameters)
Functions	Configuration of device Start/Stop Modification of set-point parameters Monitoring of measured variables
Connection	2-wires Note: To reduce the noise use a shielded cable.
Address	Default : 1 Selectable via software: range 1 – 247 Note: Base address can be shifted by +1 by changing the jumper position (see Structure section)
Protocol	Modbus (RTU)
Factory defined data format	Data bits: 8 Parity: none Stop bit: 1 Selectable via software: parity: none (2 stop bits), odd (1 stop bit), even (1 stop bit)
Baud rate	Default: 9.6k bits/s Selectable via software: 9.6k, 19.2k, 38.4k, 57.6k bits/s

Note: The HDMS requires a two-wire electrical interface in accordance with EIA/TIA-485 standard. A third conductor is recommended to be connected to all the devices of the Bus, referred to as Common. Use shielded cables to avoid external noise interference. The shield should be connected to protective ground at one end of each cable. If a connector is used at this end, the shell of the connector shall be connected to the shield of the cable.

Performance

Current / power ratings: kW and HP @ 40°C

Model	IEC rated current	110 – 120 VAC	220 – 240 VAC
HDMS2312…	12 Arms	0.56 kW / 0.75 HP	1.5 kW / 2 HP
HDMS2325…	25 Arms	1.1 kW / 2 HP	3.7 kW / 3 HP
HDMS2332…	32 Arms	1.5 kW / 2 HP	4 kW / 5 HP
HDMS2337…	37 Arms	2.2 kW / 3 HP	5.5 kW / 5 HP

Ratings:
kW rating according to IEC/EN 60947-4-2
HP rating according to UL60947-4-2

Connection diagrams

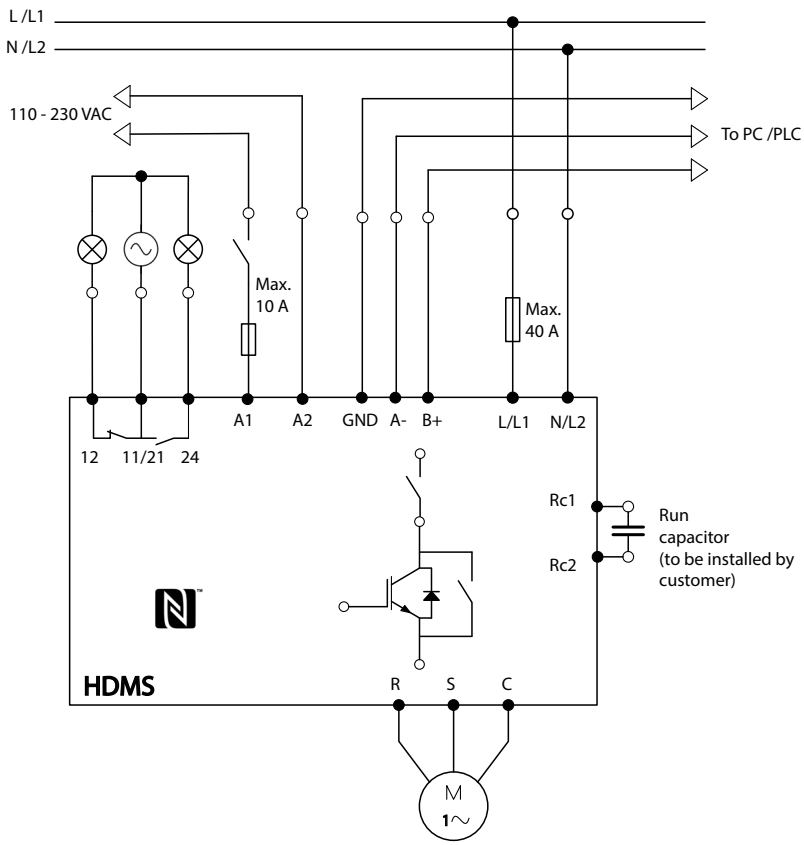

Terminal markings

Marking	
L/L1, N/L2	Line connections
R, S, C	Load connections R – Main winding , S – Start winding , C – Common
Rc1, Rc2	Run capacitor connection Note: If run capacitor is not used (or not accessible), short RC_1 and RC_2 with a cable of minimum 2.5 mm^2 thickness.
A1, A2	Control voltage
11, 12	Alarm indication
21, 24	Bypass indication
A -, B +, GND	Modbus connections

Connection diagrams (cont.)

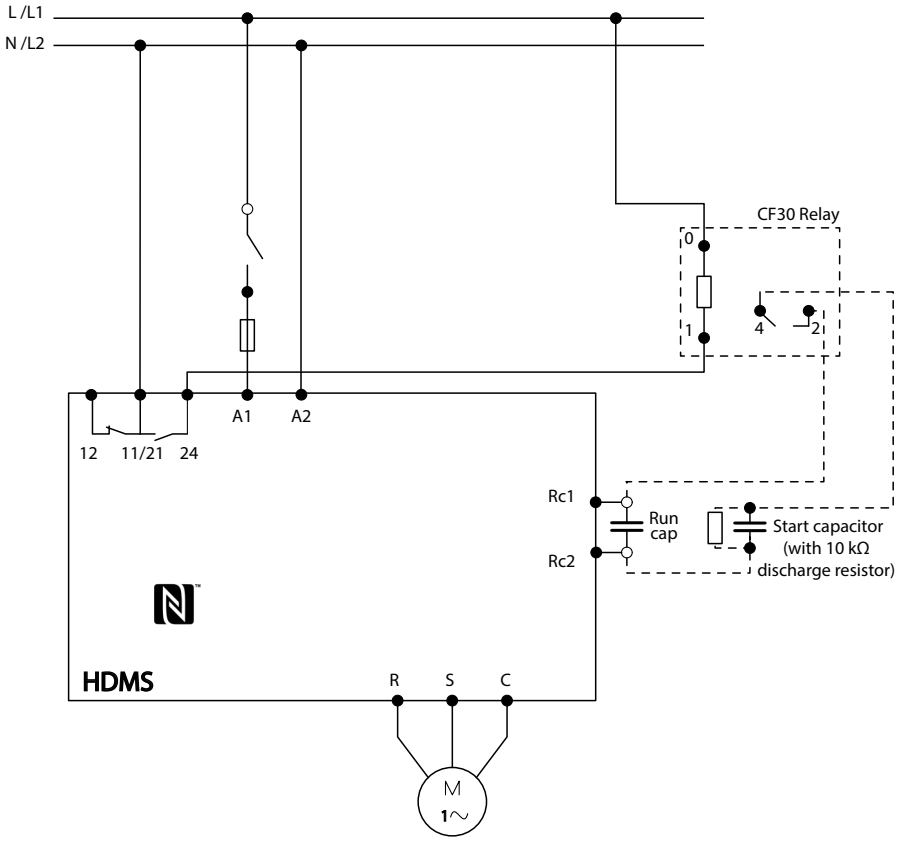

HDMS Booster kit connection

Note: When using booster kit relay logic for 21, 24 must be changed to normally closed (NC) logic. Refer to Modbus manual.

Terminal markings

Marking	
L/L1, N/L2	Line connections
R, S, C	Load connections R – Main winding , S – Start winding , C – Common
Rc1, Rc2	Run capacitor connection Note: If run capacitor is not used (or not accessible), short RC_1 and RC_2 with a cable of minimum 2.5 mm^2 thickness.
A1, A2	Control voltage
11, 12	Alarm indication
21, 24	Bypass indication
A -, B +, GND	Modbus connections

Connection specifications

Line conductors L / L1, N / L2, R, S, C (acc. to EN60947-1)	
Flexible	0.75 – 10 mm^2
Rigid (solid or stranded)	0.75 – 10 mm^2
Flexible with end sleeve (ferrule)	0.75 – 10 mm^2
Rigid (solid or stranded)	8 – 18 AWG
Terminal type	Lever type terminal
Maximum tightening torque	Not applicable
Stripping length	17 – 18 mm

Secondary conductors A1, A2, 11, 12, 21, 24, A-, B+, GND (acc. to EN60998)	
Flexible	0.5 – 2.5 mm^2
Rigid (solid or stranded)	0.5 – 2.5 mm^2
Flexible with end sleeve (ferrule)	0.5 – 2.5 mm^2
Rigid (solid or stranded)	12 – 20 AWG
Terminal type	Spring loaded terminal
Maximum tightening torque	Not applicable
Stripping length	10 – 11 mm

Use 75°C copper (Cu) conductors

Troubleshooting

LED status indication

State	Supply (green LED)	Ramp/Bypass (yellow LED)	Alarm (red LED)	Modbus (blue LED)
Idle	ON	OFF	OFF	OFF/Flashing
Ramping	ON	Flashing	OFF	OFF/Flashing
Bypass	ON	ON	OFF	OFF/Flashing
Alarm (Auto-recovery)	ON	OFF	Flashing	OFF/Flashing
Internal fault	ON	OFF	ON	OFF/Flashing
Modbus communication active	ON	ON/OFF	ON/OFF/Flashing	Flashing
Delay time between starts	Flashing	OFF	OFF	OFF/Flashing

Relay status indication

State	Alarm (11, 12)	Bypass (21, 24)
OFF	Closed	Open
Idle	Closed	Open
Ramping	Closed	Open
Bypass	Closed	Closed
Alarm (Auto-recovery)	Open	Open
Internal fault	Open	Open
Modbus communication active	-	-

Note: Relay logic can be modified via Modbus

Alarms

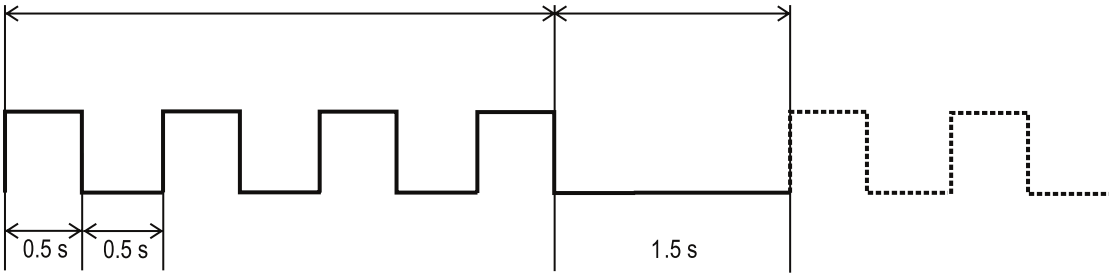

Number of flashes	2
Alarm	Reverse rotation
Alarm description	The HDMS will trigger this alarm when it detects that the motor is rotating in reverse. This condition may happen as a result of brief power interruptions.
Alarm recovery period	5 minutes
Consecutive alarms for hard reset	5
Action to recover alarm	The alarm will self-recover.
Troubleshooting	• Check for voltage interruptions on the mains input.

Number of flashes	3
Alarm	Line voltage out of range
Alarm description	At every power-up the HDMS automatically detects the supply voltage level and determines whether it is working on a 110 or 230 VAC supply. The under- or over- voltage alarm level is then set at a level of -20% and + 20% (from the measured supply voltage level) respectively. If the supply voltage level is out of these limits for more than 5 seconds, then the line voltage out of range alarm will be triggered.
Alarm recovery period	5 minutes
Consecutive alarms for hard reset	5
Action to recover alarm	The alarm will self-recover (in auto-recovery mode) after 5 minutes from when the supply voltage is within limits.
Troubleshooting	• Check supply voltage level across L1, N terminals. • Check for possible disturbances on the voltage network (such as unfiltered variable frequency drives).

Number of flashes	4
Alarm	Wiring fault
Alarm description	If the HDMS measures a current ≤ 750 mA for 2 mains cycles (40 ms approx.) when control is applied, the HDMS will trigger this alarm. This alarm may trigger in case there is a fault in the run capacitor, compressor start winding or if run capacitor is not connected to RC_1 and RC_2 terminals.
Alarm recovery period	5 minutes
Consecutive alarms for hard reset	5
Action to recover alarm	The alarm will self-recover after 5 minutes.
Troubleshooting	• Check that the leads of the run capacitor are properly connected to the HDMS faston terminals. • Check that the run capacitor is not faulty. In case it is faulty replace with a new one. • Check the resistance on the start winding. • Check the connection from the HDMS to the compressor start winding (S) + common (C). • If run capacitor is not used (or not accessible), short RC_1 and RC_2 with a cable of minimum 2.5 mm^2 thickness.

Number of flashes	5
Alarm	Locked rotor
Alarm description	This alarm is triggered when I_{RUN} ≥ 8 x FLC or I_{TOT} is ≥ 8 FLC for at least 5 mains cycles (100 ms approx.) I_{RUN} = current measured on main winding (R) I_{TOT} = current measured on L/L1 (current drawn from mains) Note: Unless the value of FLC is modified via Modbus, the default value of FLC = Ie.
Alarm recovery period	5 minutes
Consecutive alarms for hard reset	5
Action to recover alarm	The alarm will self-recover after 5 minutes.
Troubleshooting	• Check that the HDMS model is suitably rated for the motor. • Check motor windings resistance to check if motor is damaged.

Number of flashes	6
Alarm	Excess ramp-up time
Alarm description	The HDMS limits the maximum motor start time to a maximum of 1 second. If the motor does not reach full speed within this time, the HDMS will trigger this alarm.
Alarm recovery period	5 minutes
Consecutive alarms for hard reset	5
Action to recover alarm	The alarm will self-recover after 5 minutes.
Troubleshooting	• Check that the HDMS model is suitably rated for the motor. • Check motor windings resistance to check if motor is damaged. • Check for high pressure difference during start. In case of unbalance, allow enough delay time for pressures to balance. • Check the mains voltage level during motor start. In case the voltage is too low, the HDMS might not supply enough current to start the load. • Check that the run capacitor has the correct capacitance value according to manufacturer recommendations. • Check that main (R) winding is connected properly. • Install a booster kit to inverse starting torque.

Number of flashes	7
Alarm	Over-temperature
Alarm description	The HDMS is equipped with a NTC sensor. If the measured temperature ≥ 90ºC (and lower than -30ºC) for ≥ 0.5 s the HDMS will trigger this alarm.
Alarm recovery period	5 minutes (or longer depending on the cooling time required for the temperature to settle to within the permissible temperature limits)
Consecutive alarms for hard reset	5
Action to recover alarm	The alarm will self-recover.
Troubleshooting	• Check the HDMS surrounding temperature and ensure that there is enough ventilation around it. • Check for sources with high heat dissipation. • Make sure that the number of starts per hour specified is not exceeded.

Number of flashes	8
Alarm	Overload
Alarm description	The overload alarm can be triggered in case of the following conditions: Measured current > 1.05 x Ie during bypass. If load current > FLC, then trip time will vary according to Trip Class 10.
Alarm recovery period	Depends on the cooling period. The HDMS will only recover if the internal temperature is within safe limits.
Consecutive alarms for hard reset	5
Action to recover alarm	The alarm will recover automatically. The recovery time will vary according to the cooling time required by HDMS. In any case it will be 5 minutes or longer. Note: allow enough time for the motor to cool before attempting the next start.
Troubleshooting	• Make sure that the FLC setting is according to the current on the motor name plate. • Check for any blockages in the load.

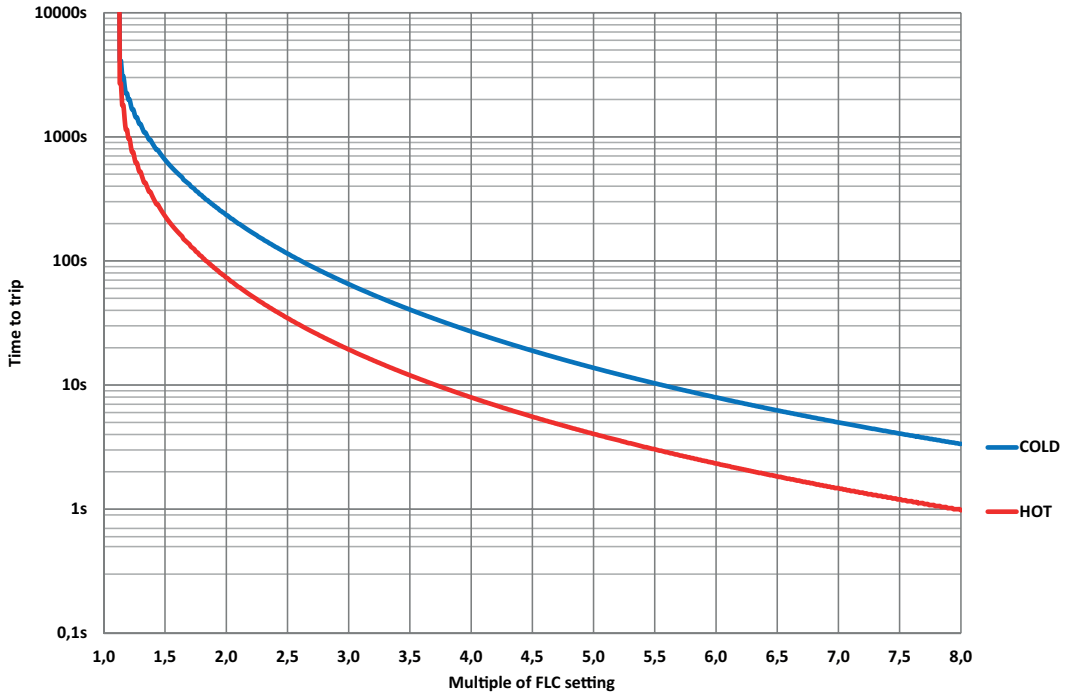

Number of flashes	9
Alarm	Microcontroller reset
Alarm description	In the case there is a microcontroller reset during power-up sequence (i.e. when user applies mains power), the HDMS will trigger this alarm.
Alarm recovery period	5 minutes
Consecutive alarms for hard reset	1
Action to recover alarm	The alarm will self-recover (in auto-recovery mode) after 5 minutes.
Troubleshooting	• Check for possible external noise sources such as large mechanical contactors installed in close proximity to the HDMS.

Number of flashes	10
Alarm	Shorted power unit
Alarm description	The HDMS will trigger this alarm when it detects a current flow during idle state or when voltage is present on main winding when main relay SCRs are energised.
Alarm recovery period	5 minutes
Consecutive alarms for hard reset	1
Action to recover alarm	The alarm does not self-recover.
Troubleshooting	• Check if problem is cleared by resetting the power. • If problem persists contact your Carlo Gavazzi representative.

Number of flashes	Fully ON
Alarm	Internal fault
Alarm description	In case there is an internal fault in the HDMS circuitry, the Red LED will remain continuously ON.
Alarm recovery period	-
Consecutive alarms for hard reset	1
Action to recover alarm	Note: this alarm is not resettable and it is suggested to replace the unit and contact a Carlo Gavazzi representative should this alarm occur.
Troubleshooting	• Check if problem is cleared by resetting the power through L1/L, L2/N. • If the alarm persists, replace the device.

Short circuit protection

Type 1 protection implies that after a short circuit, the device under test will no longer be in a functioning state. The product variants listed in the table hereunder are suitable for use on a circuit capable of delivering not more than 5,000 symmetrical Amperes, 240 Volts maximum when protected by fuses. Tests at 5,000 A were performed with Class RK5 fuses; please refer to the table below for maximum allowed Ampere rating of the fuse. Use fuses only.

Protection co-ordination Type 1 according to UL 60947-4-2

Item No.	Max. fuse size [A]	Current [kA]	Class	Max. voltage [VAC]	Max. cross-sectional area
HDMS2312…	40	5	RK5	240	10 mm² / AWG 8
HDMS2325…					
HDMS2332…					
HDMS2337…					

COPYRIGHT ©2020
Content subject to change. Download the PDF: www.productselection.net