HDL3000 HV Series

XP Power

3000W FAN COOLED

AC-DC POWER SUPPLIES

The HDL3000 HV series offers users both output voltage and output current programming (0 – 105%) via resistance, voltage or digital bus in a very high efficiency, high power density 3kW chassis mount package. Measuring just 6.69” x 2.52” x 11.02”, the HDL3000 HV also features active current sharing, built-in ORing diode, remote on/off and a power OK signal. The standby output is available whenever the mains supply is present and can be user selected as either 5V at 0.5A or 9V at 0.3A.

Features

- High efficiency up to 92%
- High power density
- DC outputs from 150-400VDC
- Programmable output voltage (0-105%)
- Programmable output current (0-105%)
- I²C, RS485 & RS232 interfaces
- Parallel operation
- Fully featured signals & controls
- 3 year warranty

Applications

Industrial Electronics

Lasers

LED Heating

Robotics

Dimensions

6.69” x 2.52” x 11.87”
(170.0 x 64.0 x 301.49mm) including connectors

Models & Ratings

Model Number	Output Power		Output Voltage	Output Current		Ripple & Noise	Efficiency[1]
	High Line	Low Line		High Line	Low Line		
HDL3000PS150	3000W	2000W	150VDC	20.0A	13.3A	1500mV	91%
HDL3000PS200	3000W	2000W	200VDC	15.0A	10.0A	2000mV	91%
HDL3000PS250	3000W	2000W	250VDC	12.0A	8.0A	2500mV	91%
HDL3000PS300	3000W	2000W	300VDC	10.0A	6.7A	3000mV	92%
HDL3000PS400	3000W	2000W	400VDC	7.50A	5.0A	4000mV	92%

Notes:

1. Measured with 230VAC input and full load.

Input

Characteristic	Minimum	Typical	Maximum	Units	Notes & Conditions
Input Voltage	90		264	VAC	See derating curve
Input Frequency	47		63	Hz	
Power Factor		0.98/0.95			115/230VAC full load
Input Current			19.7/14.5	A	115VAC at 2000W/230VAC at 3000W
Inrush Current			43/85		115/230VAC
Earth Leakage Current			1	mA	264VAC/60Hz

Output

Characteristic	Minimum	Typical	Maximum	Units	Notes & Conditions
Output Voltage	150		400	VDC	See Models and Ratings table
Output Trim		±5		%	By potentionmeter
Output Voltage Program	0		105	%	Of rated output. Tolerance ±2%
Output Current Program	0		105	%	Of rated output. Tolerance ±3%
Voltage Tolerance[1]			±2	%	Of rated output voltage[1]
Current Tolerance[1]			±3	%	Of rated output current[1]
Minimum Load	0			A	
Start Up Delay			1.1	s	
Start Up Rise Time			350	ms	At full load
Hold Up Time		10		ms	At 230VAC and full load
Line Regulation			±1	%	
Load Regulation			±1 (V1) /±3	%	V1 Standby. 0-100% load
Transient Response		<1		%	For a 25% step load change
Ripple & Noise	1500		4000	mV pk-pk	See models and ratings table. Measured with 20MHz bandwidth and using 12” twisted pair wire terminated with 0.1µF ceramic capacitor and 47µF electrolytic at 25°C ambient.
Overvoltage Protection	Tracks output voltage, see application notes. Recycle AC to reset. Tolerance 7%.				
Overtemperature Protection	Internally. Output shuts down, auto recovers.				
Overload Protection		105			Rated power, constant current.
Short Circuit Protection					Auto recovery.
Temperature Coefficient		±0.02		%/°C	0-50°C
Enable	Output must be enabled, see application notes, power supply is shipped with enable links fitted.				
Current Share	8 supplies can share within 5%. If total load is less than 5% of rated load only one unit will operate.				
Standby Output	5V at 0.5A, present whenever AC is applied (9 V at 0.3A, user selectable, by connecting ‘VSET’, Pin 6 of CN5 to GND of CN5).				

Notes:

1. Tolerance includes setup time tolerance, line regulation and load regulation.

Output Voltage Programming

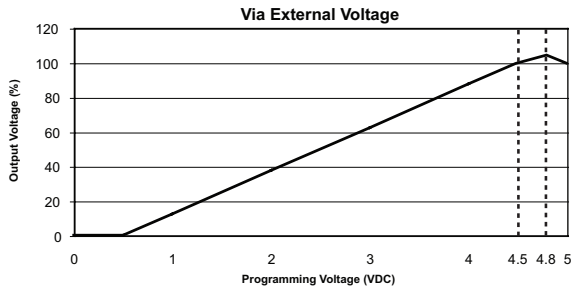

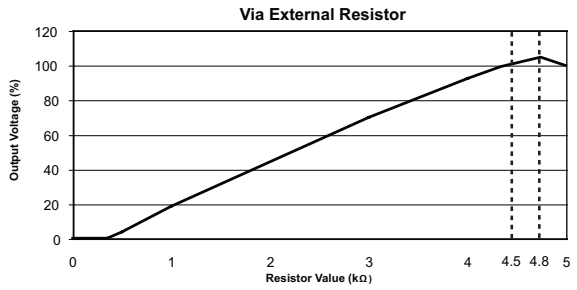

Output Current Programming

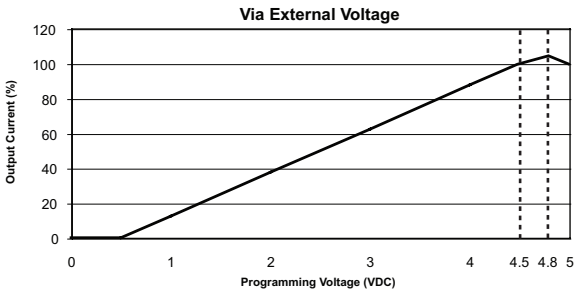

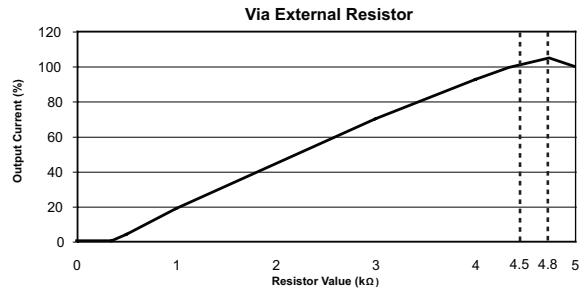

Output Voltage/Current Programming

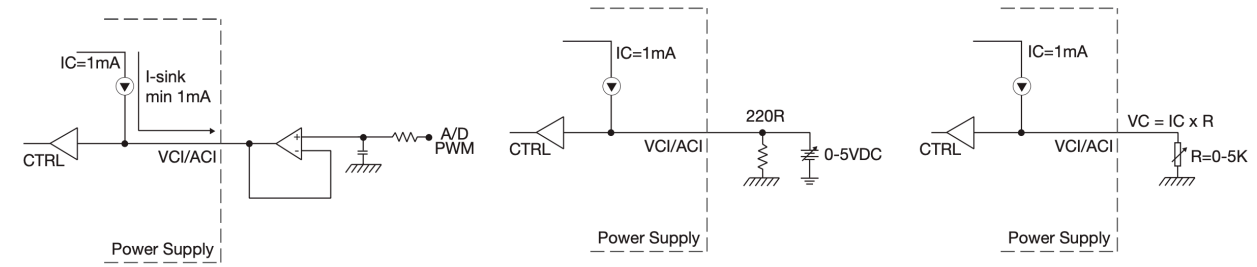

General

Characteristic	Minimum	Typical	Maximum	Units	Notes & Conditions
Efficiency		91		%	See Models and Ratings table.
Isolation: Input to Output	3000			VAC	
Input to Ground	1500			VAC	
Output to Ground	500			VAC	
Switching Frequency		70		kHz	PFC.
	55		95		PWM, variable.
	40		150		Standby, variable.
Power Density			14.4	W/in³	
Signals and Controls	Enable, Current Share, V Program, I Program, 5 V Standby, Power OK.				
Mean Time Between Failure		495		khrs	MIL-HDBK-217F, 25°C GB.
Weight		7.26 (3.3)		lb(g)	

Environmental

Characteristic	Minimum	Typical	Maximum	Units	Notes & Conditions
Operating Temperature	-20		60	°C	Derate linearly from 100% load at 50°C to 50% load at 60°C.
Storage Temperature	-40		+85	°C	10-95% RH, non condensing.
Cooling	Internal fan fitted, speed increases with load and internal temperature.				
Humidity	20		90	%RH	Non-condensing
Operating Altitude			3000	m	
Vibration			2	g	10-500Hz, 10 min/cycle, 60 min period for each axis, compliant to IEC60068-2-16, IEC 60068-2-64.

Derating Curve

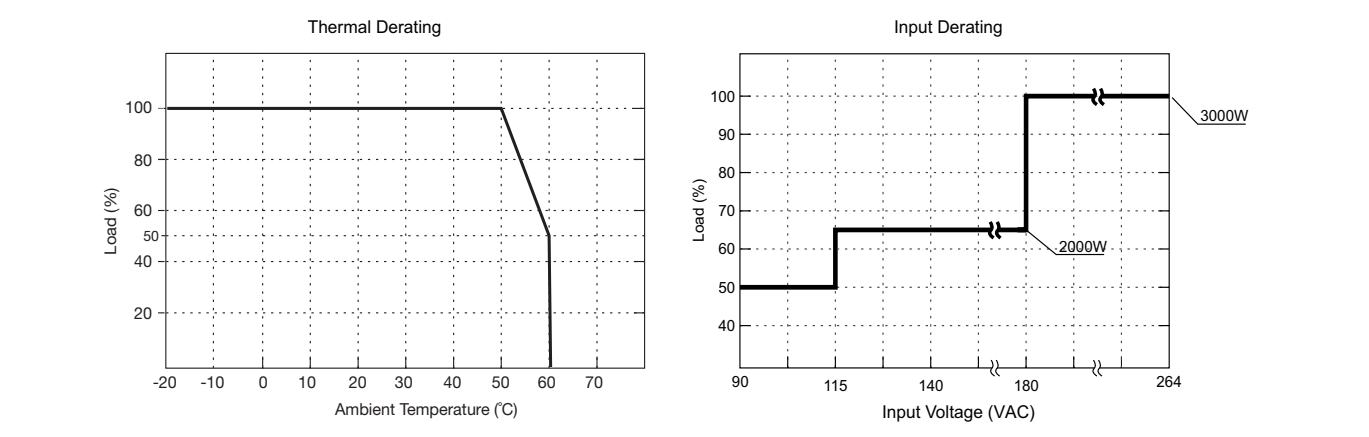

Signals & Controls

Characteristic	Output Status
Solid (Green)	DC Output OK
Solid (Orange)	DC Output OK in remote control mode
Slow Blink (Green)	Output Not Enabled
Slow Blink (Orange)	Output Not Enabled in remote control mode
Fast Blink (Red)	Over Voltage
Solid (Red)	Over Loaded
Slow Blink (Red)	Over Temperature
Intermittent Blink (Red)	Fan Fail
Short & Long Blink (Red)	AUX Standby Failure

Remote Enable

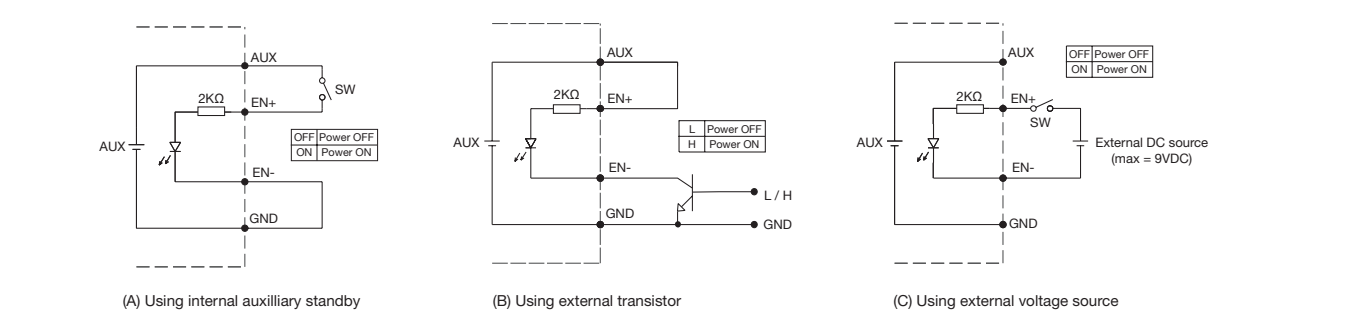

*GND shown in above diagram is referring to the GND of CN5, not the grounding from output power (NEG (-))

EMC: Emissions

Phenomenon	Standard	Test Level	Notes & Conditions
Conducted	EN55032	Class A	
Radiated	EN55032	Class A	
Harmonic Currents	EN61000-3-2	Class A	
Voltage Flicker	EN61000-3-3		

EMC: Immunity

Phenomenon	Standard	Test Level	Criteria	Notes & Conditions
ESD Immunity	EN61000-4-2	2 / 3	A	±4kV contact / ±8kV air discharge
Radiated Immunity	EN61000-4-3	3 V/m	A	
EFT	EN61000-4-4	±1kV	A	
Surge	EN61000-4-5	Installation class 3	A	
Conducted	EN61000-4-6	3Vrms	A	
Dips	EN55024	1A/m	A	
Interrupt		Int. >95% 10ms	A	
		Int. >95% 5000ms	B	

Safety Approvals

Safety Agency	Standard	Notes & Conditions
CB Report	IEC62368-1: 2014	Audio/Video, Information and Communication Technology Equipment
UL	UL62368-1, CAN/CSA C22.2 No.62368-1-14	
TUV	EN62368-1: 2014/A11: 2017	
CE	Meets all applicable directives	
UKCA	Meets all applicable legislation	

Application Notes

Power OK Signal

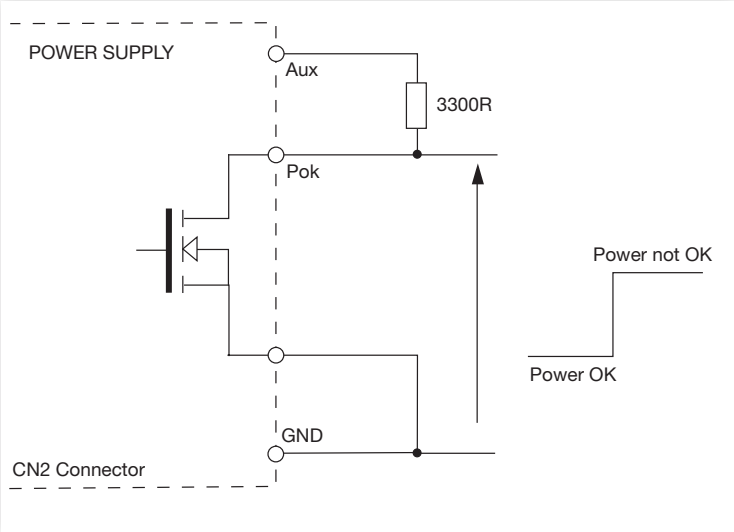

OVP Settings

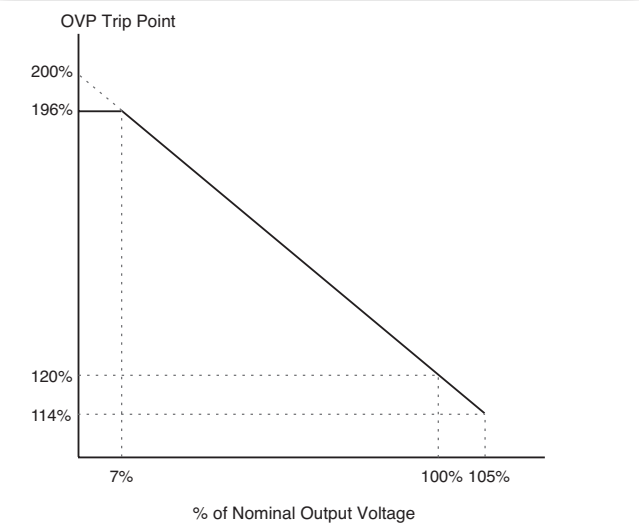

Open drain signal, low when PSU turns on.
Maximum sink current: 20mA Maximum drain voltage: 40V

Application Notes

RS232 Connection Diagram

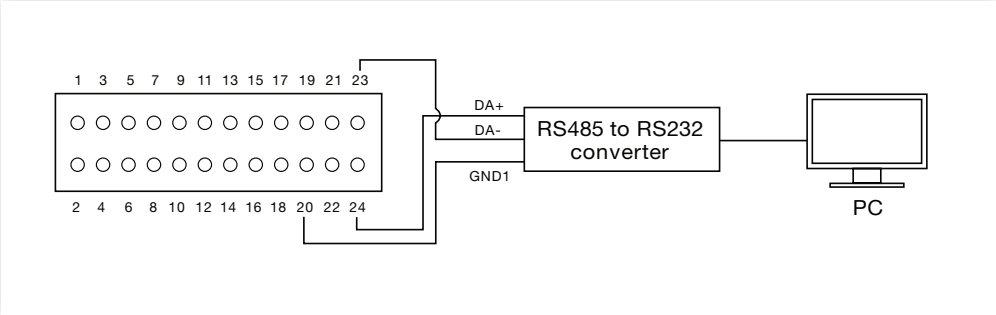

Current Sharing

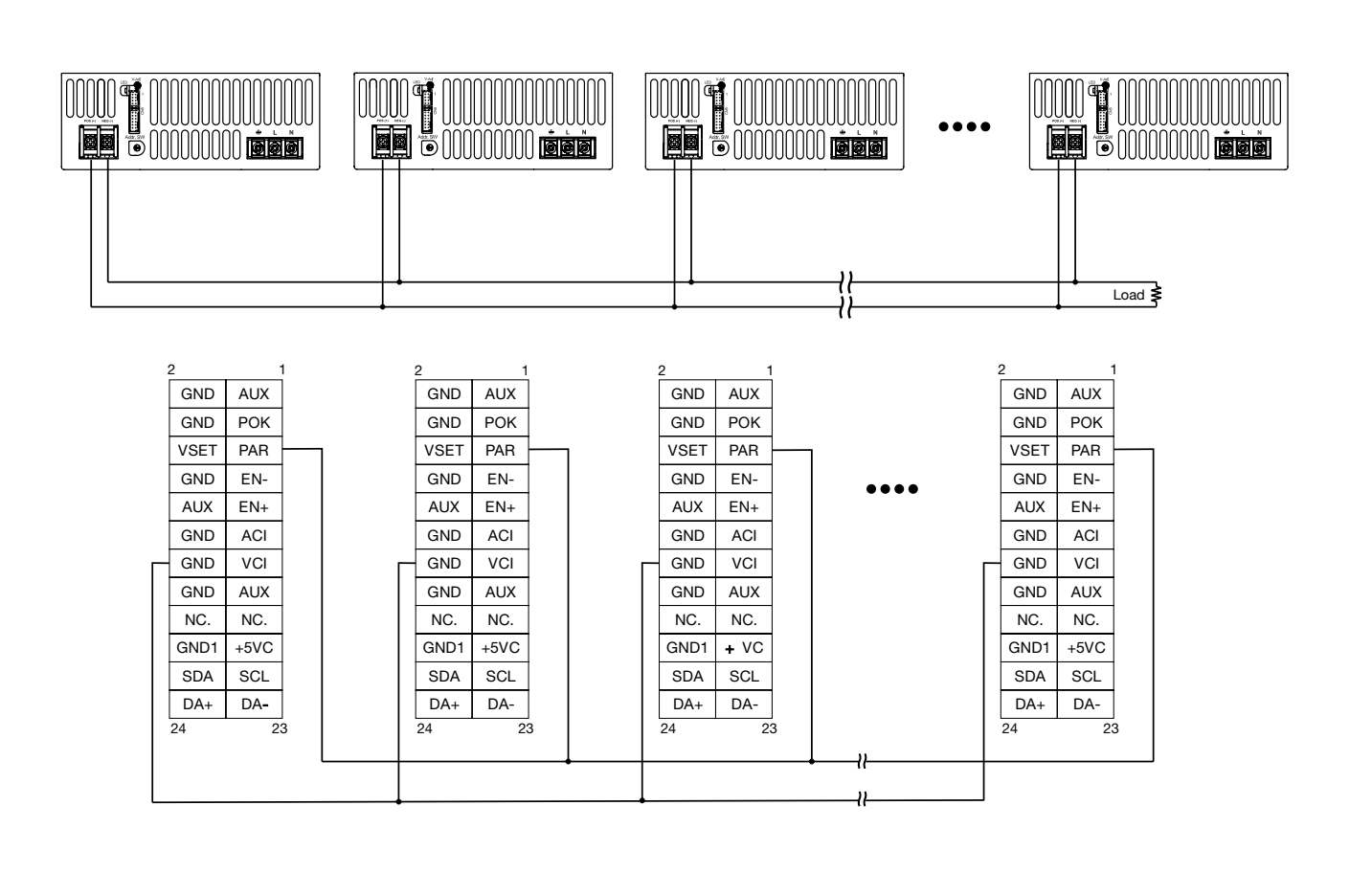

Notes:

1. In parallel operation, it is possible that only one unit will operate if the load is less than 5% of the combined rated output load.
2. Output voltage of each PSU among parallel unit 3 should be <0.2VDC difference.
3. Total output current must not exceed 90% of total rated current.

Mechanical Details

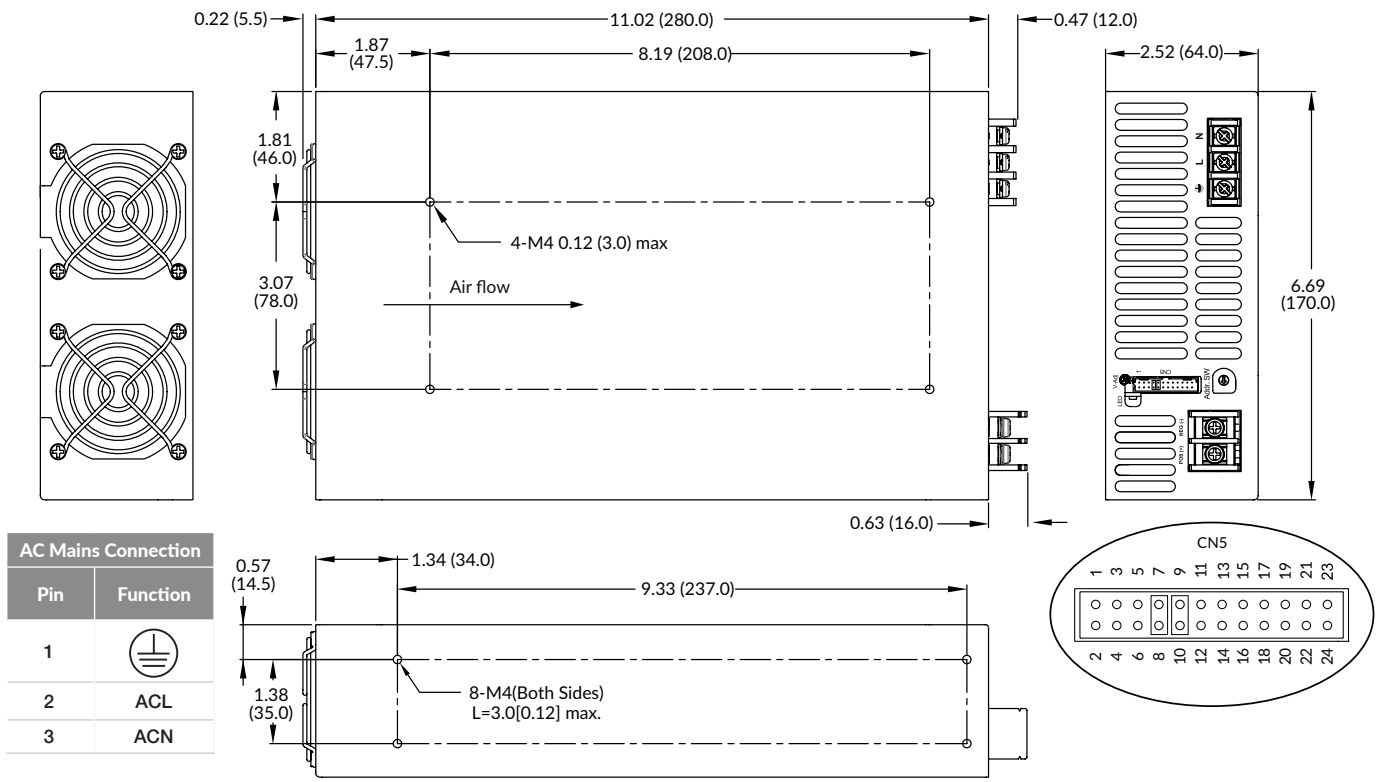

AC Mains Connection	
Pin	Function
1	⏚
2	ACL
3	ACN

CN5 Control Pin Connections								
Pin	Function	Description	Pin	Function	Description	Pin	Function	Description
1	AUX	+5V / 0.5A or +9V / 0.3A Auxiliary power	9	EN+	Inhibit ON/OFF (+)	17	N.C.	
2	GND	Ground	10	AUX	+5V / 0.5A or +9V / 0.3A Auxiliary power	18	N.C.	
3	POK	Power OK	11	ACI	I Program	19	+5VC	Use with GND1, isolated supply for I²C and RS485 interfaces
4	GND	Ground	12	GND	Ground	20	GND1	Use with +5VC, isolated supply for I²C and RS485 interfaces
5	PAR	Parallel operation current share	13	VCI	V Program	21	SCL	Serial Clock for I²C interface
6	VSET	Aux output setting	14	GND	Ground	22	SDA	Serial Data for I2² interface
7	EN-	Inhibit ON/OFF (-)	15	AUX	+5V / 0.5A or +9V	23	DA-	For RS485 Data- Interface
8	GND	Ground	16	GND	/ 0.3A Auxiliary power	24	DA+	For RS485 Data+ Interface

Notes:

1. Dimensions shown in inches (mm).
2. Weight: 7.26lb (3.3kg)
3. Mating Connector: CN5 JST PHDR-24VS Housing, SPHD-002T-P0.5 Contact
4. Torque of mounting M4 screw: 1.27Nm (13.0 kgf.cm)