# Amphenol® GT Series Reverse Bayonet Coupling Connectors

12-024-8

**Ruggedized Connector Series for Rail/Mass Transit and other Harsh Environments**

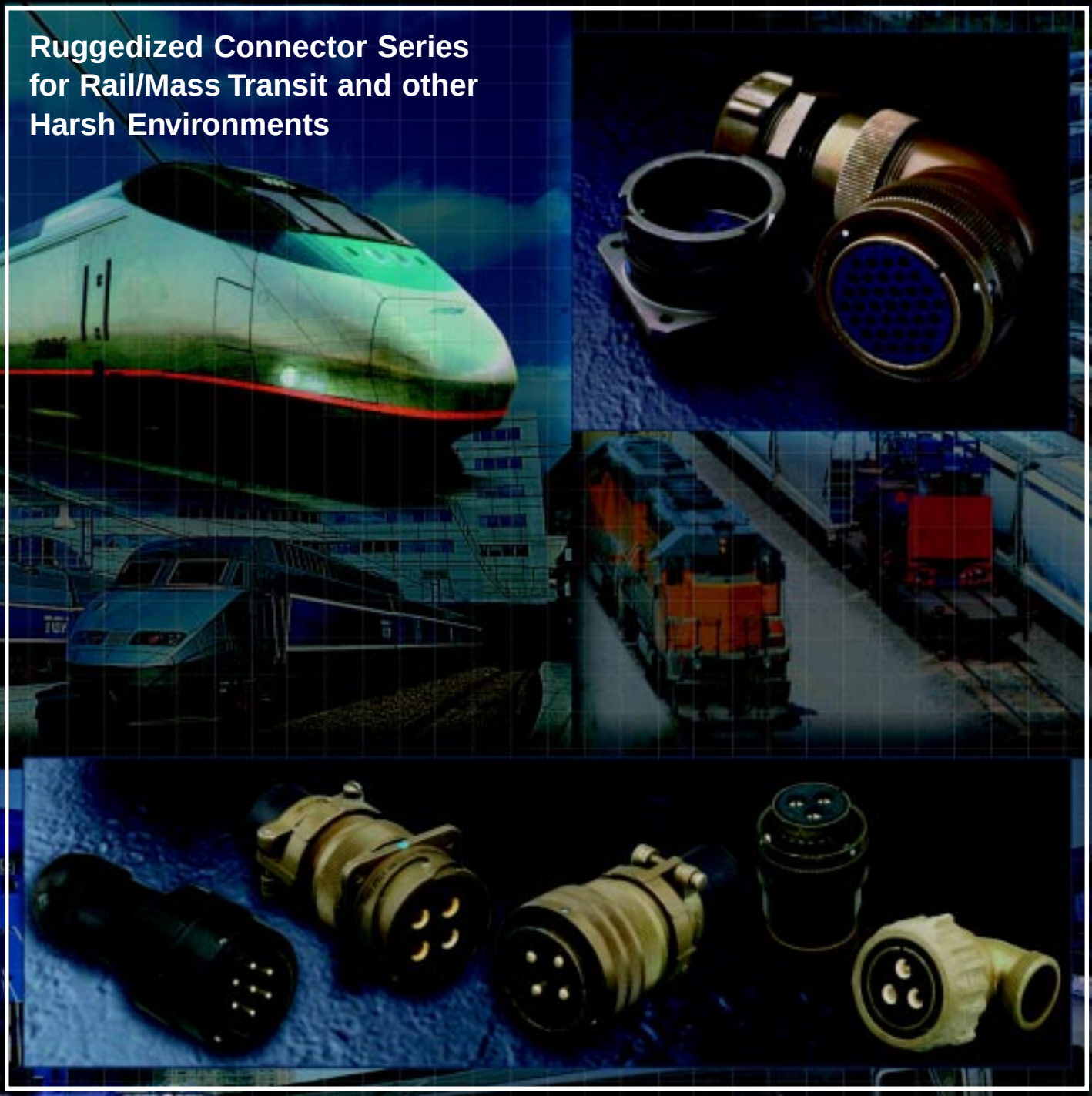

**Amphenol**

**Table of Contents** **Page No.**

Amphenol® GT Series Reversed Bayonet Coupling Connectors
General Description - - - 1
GT Series insert availability charts - - - 2-4
GT Series insert alternate positioning - - - 5
GT Series contact arrangements - - - 6-28
GT Connector Classes - - - 29
GT00A wall mount receptacle for front panel mounting - - - 30
GT00AF/00F wall mount receptacle for front panel mounting - - - 31
GT00CF/00CFZ wall mount receptacle for front panel mounting - - - 32
GT00G wall mount receptacle for front panel mounting - - - 33
GT00LCF/00LCFZ wall mount receptacle for front panel mounting - - - 34
GT00R wall mount receptacle for front panel mounting - - - 35
GT00RV wall mount receptacle for front panel mounting - - - 36
GT01A inline receptacle - - - 37
GT01AF/01F inline receptacle - - - 38
GT01G inline receptacle - - - 39
GT01LCF/01LCFZ inline receptacle - - - 40
GT01R inline receptacle - - - 41
GT01RV inline receptacle - - - 42
GT02R/02RFS box mount receptacle for front panel mounting - - - 43
GT020R/020RFSM box mount receptacle for front panel mounting - - - 44
GT030 square flange receptacle for rear panel mounting - - - 45
GT030A square flange receptacle for rear panel mounting - - - 46
GT030AF/030F square flange receptacle for rear panel mounting - - - 47
GT030G square flange receptacle for rear panel mounting - - - 48
GT030LCF/030LCFZ square flange receptacle for rear panel mounting - - - 49
GT030R square flange receptacle for rear panel mounting - - - 50
GT030RV square flange receptacle for rear panel mounting - - - 51
GT06A straight plug - - - 52
GT06AF/06F straight plug - - - 53
GT06CF straight plug - - - 54
GT06CFGG straight plug - - - 55
GT06G straight plug - - - 56
GT06G2 straight plug - - - 57
GT06LC straight plug - - - 58
GT06LCF/06LCFZ straight plug - - - 59
GT06LT straight plug - - - 60
GT06PFC straight plug - - - 61
GT06PG straight plug - - - 62
GT06PP/064PP panel plug - - - 63
GT06R straight plug - - - 64
GT06RV straight plug - - - 65
GT06SB straight plug - - - 66
GT06SBT straight plug - - - 67
GT065SL straight plug - - - 68
GT07R jam nut receptacle - - - 69
GT070 jam nut receptacle - - - 70
GT08A 90° angle plug - - - 71
GT08AF/08F 90° angle plug - - - 72
GT08CFGG 90° angle plug - - - 73
GT08LT 90° angle plug - - - 74
GT08PFC 90° angle plug - - - 75
GT08R 90° angle plug - - - 76
GT05 dummy receptacle - - - 77
GTTB thru-bulkhead receptacles - - - 78
Sealing gaskets - - - 79
Receptacle protection caps - - - 80
Plug protection caps - - - 81
MS3057-A cable clamp - - - 82
MS3420 bushing - - - 83
MS3057-C style (10-350349) cable clamp - - - 84
Rear mounting data - receptacles, sealing plugs, sealing ranges - - - 85
Crimp and solder contact information - - - 86, 87

HOW TO ORDER, connector intermateability - - - 88
GT Amphe-Power Connectors with RADSOK® Technology,
Amphe-Power™ Amphe-GTR, Power GT - - - 89
Special Application GT Connectors:
GTC-M Series with metal clips, GT-PC Connectors for high voltage power applications,
GT Connectors for the HMI Lighting industry - - - 90
Additional Amphenol Industrial Products for the Rail Industry - - - 91, 92
Sales office listing

Amphenol Aerospace operates quality systems that are certified to ISO9001: 2000 by third party registrars.

# Amphenol® GT Connectors
## with reverse bayonet coupling
## the preferred connector for mass transit

Designed originally for use by the military, the heavy duty GT connector has become widely used in commercial, geophysical, aerospace, ground support and shipboard applications. It is the preferred connector for mass transit.

Variety of Shell Styles are Available

**Wall Mount Receptacle**

**Inline Receptacle**

**Straight Plug**

**Plug With Rubber Covered Coupling Nut**

**Jam Nut Receptacle**

NOTE:
The connector products in this brochure were formerly known as Bendix® products. These products are now manufactured and sold under the Amphenol® brand name. The name "Amphenol" will replace the name "Bendix" on products and literature in the future.

**Amphenol® GT reverse bayonet coupling connectors with MIL-C-5015 insert patterns features:**

- Quick positive coupling
- Audible, tactile and visual indication of full coupling
- Waterproof – IP67 rated
- No lockwiring required
- High shock and vibration capabilities
- Inserts available in Neoprene and Viton* materials
- Low smoke/flame retardant inserts also available
- Operating temperature range:
  With Neoprene inserts: –55°C to +125°C
  With Viton** inserts: –50°C to +200°C
  With low smoke/flame retardant inserts: –55°C to +125°C
- Available in both crimp and solder terminations
- Contacts available in gold and silver plating
- Numerous military and commercial finishes available
- Zinc alloy plating (cadmium free) available
- Rugged construction; aluminum or stainless steel components
- Available with resilient cover coupling for added damage protection and increased gripping surface
- Intermateable with existing VG95234 connectors
- 2000 couplings minimum
- UL recognized
- Up to 50% more ampacity with the use of RADSOK® technology (see page 89)

Amphenol's special offerings of GT Series connectors (see end of catalog) include: GT Amphe-Power® Connectors with RADSOK® technology, the GTC-M Series with metal clip inserts and GT-PC Series for high voltage power applications. There is also information on other Amphenol Industrial Products for the Rail Industry at the end of this catalog.

For further information on your individual application requirements, contact:

Amphenol Corporation
Amphenol Industrial Operations
40-60 Delaware Avenue
Sidney, New York 13838-1395
Phone: 607-563-5011 Fax: 607-563-5351
www.amphenol-industrial.com

**For availability of Viton inserts consult Amphenol, Sidney, NY.
Viton is a registered trademark of Dupont/Dow Corning.

# GT Series
## insert availability

| Insert Arrangement | Service Rating | Total Contacts | Contact Size | | | | | | | | |
|---|---|---|---|---|---|---|---|---|---|---|---|
| | | | | | | | | Coax | | | |
| | | | 0 | 4 | 8 | 12 | 16 | 0 | 4 | 8 | 12 |
| 10SL-3 | A | 3 | | | | | 3 | | | | |
| 10SL-4† | A | 2 | | | | | 2 | | | | |
| 14S-2 | Inst. | 4 | | | | | 4 | | | | |
| 14S-4 | D | 1 | | | | | 1 | | | | |
| 14S-5 | Inst. | 5 | | | | | 5 | | | | |
| 14S-6 | Inst. | 6 | | | | | 6 | | | | |
| 14S-7 | A | 3 | | | | | 3 | | | | |
| 14S-9 | A | 2 | | | | | 2 | | | | |
| 14S-10 | Inst. | 4 | | | | | 4 | | | | |
| 14S-12 | A | 3 | | | | | 3 | | | | |
| 14S-A7 | A | 7 | | | | | 7 | | | | |
| 16S-1 | A | 7 | | | | | 7 | | | | |
| 16S-3 | B | 1 | | | | | 1 | | | | |
| 16S-4 | D | 2 | | | | | 2 | | | | |
| 16S-5 | A | 3 | | | | | 3 | | | | |
| 16S-6 | A | 3 | | | | | 3 | | | | |
| 16S-8 | A | 5 | | | | | 5 | | | | |
| 16-2 | E | 1 | | | | 1 | | | | | |
| 16-7 | A | 3 | | | 1 | | 2 | | | | |
| 16-9 | A | 4 | | | | 2 | 2 | | | | |
| 16-10 | A | 3 | | | | 3 | | | | | |
| 16-11 | A | 2 | | | | 2 | | | | | |
| 16-12 | A | 1 | | 1 | | | | | | | |
| 16-13 | A | 2 | | | | 2 | | | | | |
| 16-59 | A | 4 | | | | 4 | | | | | |
| 18-1 | A/Inst. | 10 | | | | | 10 | | | | |
| 18-3 | D | 2 | | | | 2 | | | | | |
| 18-4 | D | 4 | | | | | 4 | | | | |
| 18-5 | D | 3 | | | | 2 | 1 | | | | |
| 18-6 | D | 1 | | 1 | | | | | | | |
| 18-7 | B | 1 | | | 1 | | | | | | |
| 18-8 | A | 8 | | | | 1 | 7 | | | | |
| 18-9 | Inst. | 7 | | | | 2 | 5 | | | | |
| 18-10 | A | 4 | | | | 4 | | | | | |
| 18-11 | A | 5 | | | | 5 | | | | | |
| 18-12 | A | 6 | | | | | 6 | | | | |
| 18-13 | A | 4 | | | 1 | 3 | | | | | |
| 18-14 | A | 2 | | 1 | | | 1 | | | | |
| 18-15 | A | 4 | | | | 4 | | | | | |
| 18-16 | C | 1 | | | | 1 | | | | | |
| 18-17 | Inst. | 7 | | | | 2 | 5 | | | | |
| 18-19 | A | 10 | | | | | 10 | | | | |
| 18-20 | A | 5 | | | | | 5 | | | | |
| 18-22 | D | 3 | | | | | 3 | | | | |
| 18-24 | A/Inst. | 10 | | | | | 10 | | | | |
| 18-29 | A | 5 | | | | | 5 | | | | |
| 18-30 | A | 5 | | | | | 5 | | | | |
| 18-31 | A | 5 | | | | | 5 | | | | |

*Crimp contacts accommodate wire the same size as the contact as well as wire of the next smaller, even size. Arrangements identified with an asterisk (*) are exceptions. See insert arrangement drawings on pages 6-28 for application wire size.

| Insert Arrangement | Service Rating | Total Contacts | Contact Size | | | | | | | | |
|---|---|---|---|---|---|---|---|---|---|---|---|
| | | | | | | | | Coax | | | |
| | | | 0 | 4 | 8 | 12 | 16 | 0 | 4 | 8 | 12 |
| 20-2 | D | 1 | 1 | | | | | | | | |
| 20-3 | D | 3 | | | | 3 | | | | | |
| 20-4 | D | 4 | | | | 4 | | | | | |
| 20-6 | D | 3 | | | | | 3 | | | | |
| 20-7 | D/A | 8 | | | | | 8 | | | | |
| 20-8 | Inst. | 6 | | | 2 | | 4 | | | | |
| 20-9 | D/A | 8 | | | | 1 | 7 | | | | |
| 20-11 | Inst. | 13 | | | | | 13 | | | | |
| 20-12 | A | 2 | | 1 | | | 1 | | | | |
| 20-14 | A | 5 | | | 2 | 3 | | | | | |
| 20-15 | A | 7 | | | | 7 | | | | | |
| 20-16 | A | 9 | | | | 2 | 7 | | | | |
| 20-17 | A | 6 | | | | 5 | 1 | | | | |
| 20-18 | A | 9 | | | | 3 | 6 | | | | |
| 20-19 | A | 3 | | | 3 | | | | | | |
| 20-20 | A | 4 | | 1 | | 3 | | | | | |
| 20-21 | A | 9 | | | | 1 | 8 | | | | |
| 20-22 | A | 6 | | | 3 | | 3 | | | | |
| 20-23 | A | 2 | | | 2 | | | | | | |
| 20-24 | A | 4 | | | 2 | | 2 | | | | |
| 20-25 | Inst. | 13 | | | | | 13 | | | | |
| 20-26 | A | 19 | | | | | 19 | | | | |
| 20-27 | A | 14 | | | | | 14 | | | | |
| 20-29 | A | 17 | | | | | 17 | | | | |
| 20-30 | Inst. | 13 | | | | | 13 | | | | |
| 20-33 | A | 11 | | | | | 11 | | | | |
| 20-51 | A | 3 | | | 3 | | | | | | |
| 20-57 | A | 7 | | | | 7* | | | | | |
| 20-58 | A | 10 | | | | 5 | 5 | | | | |
| 20-59 | A | 3 | | | 3* | | | | | | |
| 20-66 | A | 6 | | | | 5* | 1 | | | | |
| 20-79 | A/D | 8 | | | | 1 | 7 | | | | |
| 22-1 | D | 2 | | | 2 | | | | | | |
| 22-2 | D | 3 | | | 3 | | | | | | |
| 22-4 | A | 4 | | | 2 | 2 | | | | | |
| 22-5 | D | 6 | | | | 2 | 4 | | | | |
| 22-6 | D | 3 | | | 2 | | 1 | | | | |
| 22-7 | E | 1 | 1 | | | | | | | | |
| 22-8 | E | 2 | | | | 2 | | | | | |
| 22-9 | E | 3 | | | | 3 | | | | | |
| 22-10 | E | 4 | | | | | 4 | | | | |
| 22-11 | B | 2 | | | | | 2 | | | | |
| 22-12 | D | 5 | | | 2 | | 3 | | | | |
| 22-13 | D/A | 5 | | | | 4 | 1 | | | | |
| 22-14 | A | 19 | | | | | 19 | | | | |
| 22-15 | E/A | 6 | | | | 5 | 1 | | | | |

†10SL-4 arrangement available only with pin contacts in receptacle and socket contacts in plug

**Coaxial cable data can be found on insert arrangement drawings, pages 6-28. For further information on coaxial contacts and cable see catalog 12-130.

# GT Series
## insert availability, cont.

| Insert Arrangement | Service Rating | Total Contacts | Contact Size | | | | | | | | |
|---|---|---|---|---|---|---|---|---|---|---|---|
| | | | 0 | 4 | 8 | 12 | 16 | Coax** | | | |
| | | | | | | | | 0 | 4 | 8 | 12 |
| 22-16 | A | 9 | | | | 3 | 6 | | | | |
| 22-17 | D/A | 9 | | | | 1 | 8 | | | | |
| 22-18 | D/A | 8 | | | | | 8 | | | | |
| 22-19 | A | 14 | | | | | 14 | | | | |
| 22-20 | A | 9 | | | | | 9 | | | | |
| 22-21 | A | 3 | 1 | | | | 2 | | | | |
| 22-22 | A | 4 | | | 4 | | | | | | |
| 22-23 | D/A | 8 | | | | 8 | | | | | |
| 22-24 | D/A | 6 | | | | 2 | 4 | | | | |
| 22-27 | D/A | 9 | | | 1 | | 8 | | | | |
| 22-28 | A | 7 | | | | 7 | | | | | |
| 22-33 | D/A | 7 | | | | | 7 | | | | |
| 22-34 | D | 5 | | | | 3 | 2 | | | | |
| 22-63 | A | 12 | | | | 4 | 8 | | | | |
| 22-65 | D/A | 8 | | | | 8* | | | | | |
| 22-70 | A | 13 | | | | 8 | 5 | | | | |
| 22-80 | A | 3 | | | 3* | | | | | | |
| 24-2 | D | 7 | | | | 7 | | | | | |
| 24-3 | D | 7 | | | | 2 | 5 | | | | |
| 24-5 | A | 16 | | | | | 16 | | | | |
| 24-6 | D/A | 8 | | | | 8 | | | | | |
| 24-7 | A | 16 | | | | 2 | 14 | | | | |
| 24-9 | A | 2 | | 2 | | | | | | | |
| 24-10 | A | 7 | | | 7 | | | | | | |
| 24-11 | A | 9 | | | 3 | 6 | | | | | |
| 24-12 | A | 5 | | 2 | | 3 | | | | | |
| 24-16 | D/A | 7 | | | 1 | 3 | 3 | | | | |
| 24-17 | D | 5 | | | | 2 | 3 | | | | |
| 24-19 | A | 12 | | | | | 12 | | | | |
| 24-20 | D | 11 | | | | 2 | 9 | | | | |
| 24-21 | D | 10 | | | 1 | | 9 | | | | |
| 24-22 | D | 4 | | | 4 | | | | | | |
| 24-27 | E | 7 | | | | | 7 | | | | |
| 24-28 | Inst. | 24 | | | | | 24 | | | | |
| 24-51 | A | 5 | | | 5 | | | | | | |
| 24-52 | Hi Volt. | 1 | | | | 1 | | | | | |
| 24-53 | A | 5 | | | 5 | | | | | | |
| 24-58 | A | 13 | | | 3 | 3 | 7 | | | | |
| 24-59 | A | 14 | | | | 7 | 7 | | | | |
| 24-60 | A | 7 | | | 7* | | | | | | |
| 24-65 | A | 15 | | | | 11 | 4 | | | | |
| 24-66 | D | 7 | | | | 7 | | | | | |
| 24-67 | Inst. | 19 | | | | 19 | | | | | |
| 24-71 | A | 7 | | | 7* | | | | | | |
| 24-75 | A | 7 | | | 7* | | | | | | |
| 24-79 | A | 5 | | | 5 | | | | | | |
| 24-80 | Inst. | 23 | | | | | 23 | | | | |

*Crimp contacts accommodate wire the same size as the contact as well as wire of the next smaller, even size. Arrangements identified with an asterisk (*) are exceptions. See insert arrangement drawings on pages 6-28 for application wire size.

| Insert Arrangement | Service Rating | Total Contacts | Contact Size | | | | | | | | |
|---|---|---|---|---|---|---|---|---|---|---|---|
| | | | 0 | 4 | 8 | 12 | 16 | Coax** | | | |
| | | | | | | | | 0 | 4 | 8 | 12 |
| 24-84 | A | 19 | | | | 1 | | | | | 18 |
| 24-96 | Inst. | 28 | | | | | 28 | | | | |
| 24-AJ | A | 25 | | | | | 25 | | | | |
| 28-1 | D/A | 9 | | | 3 | 6 | | | | | |
| 28-2 | D | 14 | | | | 2 | 12 | | | | |
| 28-3 | E | 3 | | | 3 | | | | | | |
| 28-4 | E/D | 9 | | | | 2 | 7 | | | | |
| 28-5 | D | 5 | | 2 | | 1 | 2 | | | | |
| 28-6 | D | 3 | | 3 | | | | | | | |
| 28-7 | D | 2 | | 2 | | | | | | | |
| 28-8 | E/D/A | 12 | | | | 2 | 10 | | | | |
| 28-9 | D | 12 | | | | 6 | 6 | | | | |
| 28-10 | D/A | 7 | | 2 | 2 | 3 | | | | | |
| 28-11 | A | 22 | | | | 4 | 18 | | | | |
| 28-12 | A | 26 | | | | | 26 | | | | |
| 28-13 | A | 26 | | | | | 26 | | | | |
| 28-15 | A | 35 | | | | | 35 | | | | |
| 28-16 | A | 20 | | | | | 20 | | | | |
| 28-17 | B/D/A | 15 | | | | | 15 | | | | |
| 28-18 | C/D/A/Inst. | 12 | | | | | 12 | | | | |
| 28-19 | B/D/A | 10 | | | | 4 | 6 | | | | |
| 28-20 | A | 14 | | | | 10 | 4 | | | | |
| 28-21 | A | 37 | | | | | 37 | | | | |
| 28-22 | D | 6 | | 3 | | | 3 | | | | |
| 28-51 | A | 12 | | | | 12 | | | | | |
| 28-59 | A | 17 | | | | 7 | 10 | | | | |
| 28-66 | A | 16 | | | 2 | 14 | | | | | |
| 28-72 | Coax | 3 | | | | | | | 3 | | |
| 28-74 | A | 16 | | | 7* | | 9 | | | | |
| 28-75 | A | 16 | | | 7* | | 9 | | | | |
| 28-79 | A | 16 | | | 7 | | 9 | | | | |
| 28-82 | D | 6 | | | 2 | 4 | | | | | |
| 28-84 | A | 9 | | | 9 | | | | | | |
| 28-AY | A | 9 | | 4 | | | 5 | | | | |
| 32-1 | E/D | 5 | 2 | | | 3 | | | | | |
| 32-2 | E | 5 | | 3 | | | 2 | | | | |
| 32-3 | D | 9 | 1 | 2 | | 2 | 4 | | | | |
| 32-4 | A/D | 14 | | | | 2 | 12 | | | | |
| 32-5 | D | 2 | 2 | | | | | | | | |
| 32-6 | A | 23 | | 2 | 3 | 2 | 16 | | | | |
| 32-7 | Inst./A | 35 | | | | 7 | 28 | | | | |
| 32-8 | A | 30 | | | | 6 | 24 | | | | |
| 32-9 | D | 14 | | 2 | | | 12 | | | | |
| 32-10 | E/B/D/A | 7 | | 2 | 2 | | 3 | | | | |
| 32-12 | A/D | 15 | | | | 5 | 10 | | | | |
| 32-13 | D | 23 | | | | 5 | 18 | | | | |
| 32-15 | D | 8 | 2 | | | 6 | | | | | |
| 32-16 | A | 23 | | 2 | 3 | 2 | 16 | | | | |

**Coaxial cable data can be found on insert arrangement drawings, pages 6-28. For further information on coaxial contacts and cable see catalog 12-130.

# GT Series
## insert availability, cont.

| Insert Arrange-ment | Service Rating | Total Con-tacts | Contact Size | | | | | | | | |
|---|---|---|---|---|---|---|---|---|---|---|---|
| | | | | | | | | Coax** | | | |
| | | | 0 | 4 | 8 | 12 | 16 | 0 | 4 | 8 | 12 |
| 32-17 | D | 4 | | 4 | | | | | | | |
| 32-22 | A | 54 | | | | | 54 | | | | |
| 32-25 | A | 25 | | | | 25 | | | | | |
| 32-31 | A | 31 | | | | | 31 | | | | |
| 32-48 | Inst. | 48 | | | | | 48 | | | | |
| 32-52 | D | 8 | 2 | | | 6 | | | | | |
| 32-53 | E/Inst. | 42 | | | | 5 | 37 | | | | |
| 32-56 | A | 30 | | | | 6* | 24 | | | | |
| 32-57 | Coax | 8 | | | | 6 | | 2 | | | |
| 32-58 | Coax | 4 | | | | | | | 4 | | |
| 32-59 | A | 42 | | | | | 40 | | | 2 | |
| 32-60 | A | 23 | | | | | 15 | | | 8 | |
| 32-62 | Coax | 23 | | 2 | 1 | 2 | 16 | | | 2 | |
| 32-64 | Inst. | 54 | | | | | 54 | | | | |
| 32-68 | A | 16 | | | | | 12 | | 4 | | |
| 32-73 | A | 46 | | | | | 46 | | | | |
| 32-75 | Coax | 9 | | | | 2 | | | | 7 | |
| 32-76 | A | 19 | | | | 19 | | | | | |
| 32-79 | D | 5 | | 4 | 1 | | | | | | |
| 32-82 | A | 16 | | 4 | | | 12 | | | | |
| 32-AF | A | 55 | | | | | 55 | | | | |
| 32-AM | A | 1 | 1 size 4/0 | | | | | | | | |
| 36-1 | D | 22 | | | | 4 | 18 | | | | |
| 36-3 | D | 6 | 3 | | | 3 | | | | | |
| 36-4 | D/A | 3 | 3 | | | | | | | | |
| 36-5 | A | 4 | 4 | | | | | | | | |
| 36-6 | A | 6 | 2 | 4 | | | | | | | |
| 36-7 | A | 47 | | | | 7 | 40 | | | | |
| 36-8 | A | 47 | | | | 1 | 46 | | | | |
| 36-9 | A | 31 | | 1 | 2 | 14 | 14 | | | | |
| 36-10 | A | 48 | | | | | 48 | | | | |
| 36-11 | A | 48 | | | | | 48 | | | | |
| 36-12 | A | 48 | | | | | 48 | | | | |
| 36-13 | E/A | 17 | | | | 2 | 15 | | | | |
| 36-14 | D | 16 | | | 5 | 5 | 6 | | | | |
| 36-15 | D/A | 35 | | | | | 35 | | | | |
| 36-16 | A | 47 | | | | 7 | 40 | | | | |
| 36-17 | A | 47 | | | | 7 | 40 | | | | |
| 36-18 | A | 31 | | 1 | 2 | 14 | 14 | | | | |
| 36-20 | A | 34 | | | 2 | 2 | 30 | | | | |
| 36-22 | D | 22 | | | | 22 | | | | | |
| 36-51 | D | 4 | 2 | 2 | | | | | | | |
| 36-52 | A | 52 | | | | | 52 | | | | |
| 36-54 | A | 39 | | | 8 | | 31 | | | | |
| 36-55 | A | 39 | | | 8* | | 31 | | | | |
| 36-59 | A | 53 | | | | 3* | 50 | | | | |
| 36-60 | A | 47 | | | | 7* | 40 | | | | |
| 36-64 | Coax | 4 | | | | | | 4 | | | |
| 36-65 | Coax | 4 | | | | | | 4 | | | |

*Crimp contacts accommodate wire the same size as the contact as well as wire of the next smaller, even size. Arrangements identified with an asterisk (*) are exceptions. See insert arrangement drawings on pages 6-28 for application wire size.

| Insert Arrange-ment | Service Rating | Total Con-tacts | Contact Size | | | | | | | | |
|---|---|---|---|---|---|---|---|---|---|---|---|
| | | | | | | | | Coax** | | | |
| | | | 0 | 4 | 8 | 12 | 16 | 0 | 4 | 8 | 12 |
| 36-71 | A | 53 | | | | 3 | 50 | | | | |
| 36-73 | Coax | 7 | | | | | | | 7 | | |
| 36-74 | A | 44 | | | | | 43 | | | 1 | |
| 36-75 | A | 48 | | | | | 48* | | | | |
| 36-76 | A | 47 | | | | | 47 | | | | |
| 36-77 | D | 7 | | 7 | | | | | | | |
| 36-78 | A | 14 | | | 12 | | 2 | | | | |
| 36-79 | A | 20 | | | | 20 | | | | | |
| 36-80 | A | 20 | | | | 20* | | | | | |
| 36-83 | Coax | 7 | | | | | | | 7 | | |
| 36-85 | A/D | 35 | | | | | 35* | | | | |
| 36-97 | C | 1 | 1 size 4/0 | | | | | | | | |
| 36-99 | D | 12 | | 3 | 3 | 3 | 3 | | | | |
| 36-AF | A | 48 | | | | | 48 | | | | |
| 40-1 | D | 30 | | | | 6 | 24 | | | | |
| 40-5 | A | 5 | 5 | | | | | | | | |
| 40-9 | A | 47 | | | 1 | 22 | 24 | | | | |
| 40-10 | A | 29 | | 4 | 9 | | 16 | | | | |
| 40-30 | A | 30 | | 1 | | 29 | | | | | |
| 40-35 | D | 35 | | | | 35 | | | | | |
| 40-53 | A | 60 | | | | | 60 | | | | |
| 40-56 | A | 85 | | | | | 85 | | | | |
| 40-57 | E | 4 | 4 | | | | | | | | |
| 40-61 | A | 59 | | | 1 | 3 | 55 | | | | |
| 40-62 | A | 60 | | | | | 60 | | | | |
| 40-63 | A | 61 | | | | | 61* | | | | |
| 40-64 | Coax | 36 | | | | 3 | 20 | | | 13 | |
| 40-66 | Coax | 4 | | | | | | 4 | | | |
| 40-67 | A | 11 | | | | | 1 | | 10 | | |
| 40-68 | A | 21 | | | 21 | | | | | | |
| 40-70 | A | 61 | | | | | 61 | | | | |
| 40-72 | A | 11 | | | | | 1 | | 10 | | |
| 40-73 | A | 61 | | | | | 61 | | | | |
| 40-74 | A | 6 | | | | 1 | | 4 | 1 | | |
| 40-75 | E | 5 | 4 | | | 1 | | | | | |
| 40-80 | A | 11 | | 10 | | | 1 | | | | |
| 40-81 | A | 62 | | | | | 62* | | | | |
| 40-82 | A | 62 | | | | | 62 | | | | |
| 40-85 | A | 60 | | | | | 60* | | | | |
| 40-86 | Coax | 4 | | | | | | 4 | | | |
| 40-87 | D | 7 | | 7 | | | | | | | |
| 40-AD | A | 8 | 4 | | 4 | | | | | | |
| 40-AG | A | 38 | | | | 38 | | | | | |
| 40-AP | E | 2 | 2 size 4/0 | | | | | | | | |
| 40-AR | Inst. | 13 | 3 | 3 | | 7 | | | | | |
| 40-AS | A | 40 | | | | 25 | 15 | | | | |
| 40-AT | A | 43 | | | 1 | 24 | 18 | | | | |
| 40-AU | A | 14 | | 3 | 10 | | 1 | | | | |
| 40-AV | D | 3 | 3 size 2/0 | | | | | | | | |

**Coaxial cable data can be found on insert arrangement drawings, pages 6-28. For further information on coaxial contacts and cable see catalog 12-130.

# GT Series
## insert alternate positioning

To avoid cross-plugging problems in applications requiring the use of more than one connector of the same size and arrangement, alternate rotations are available as indicated in the accompanying charts.

As shown in the diagram below, the front face of the pin insert is rotated within the shell in a clockwise direction from the normal shell key. The socket insert would be rotated counter-clockwise the same number of degrees in respect to the normal shell key.

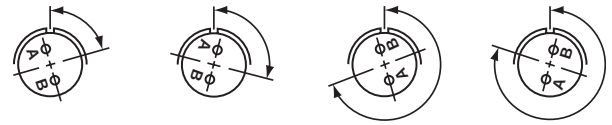


**View looking into front face of pin insert or rear of socket insert.**

The following insert arrangements have the same alternate insert rotations for W, X, Y and Z, which are:

| Degrees | | | |
|---|---|---|---|
| W | X | Y | Z |
| 80 | 110 | 250 | 280 |

| | | | | | | |
|---|---|---|---|---|---|---|
| 16-7 | 20-16 | 22-18 | 24-4 | 24-28 | 28-16 | 32-10 |
| 18-5 | 20-20 | 22-19 | 24-5 | 24-AJ | 28-17 | 32-12 |
| 18-9 | 20-22 | 22-21 | 24-6 | 28-1 | 28-19 | 32-13 |
| 18-13 | 22-3 | 22-24 | 24-7 | 28-4 | 28-20 | 32-22 |
| 18-14 | 22-6 | 22-25 | 24-12 | 28-8 | 28-21 | 32-AF |
| 20-7 | 22-12 | 22-29 | 24-14 | 28-9 | 32-1 | 36-1 |
| 20-8 | 22-14 | 22-33 | 24-16 | 28-10 | 32-3 | 36-7 |
| 20-9 | 22-15 | 22-34 | 24-17 | 28-11 | 32-4 | 36-8 |
| 20-12 | 22-16 | 24-1 | 24-20 | 28-14 | 32-6 | 36-13 |
| 20-14 | 22-17 | 24-3 | 24-21 | 28-15 | 32-9 | 40-53 |

| Insert Arrangement | Degrees | | | |
|---|---|---|---|---|
| | W | X | Y | Z |
| 10SL-4 | 63 | – | – | – |
| 14S-2 | – | 120 | 240 | – |
| 14S-5 | – | 110 | – | – |
| 14S-7 | 90 | 180 | 270 | – |
| 14S-9 | 70 | 145 | 215 | 290 |
| 16-9 | 35 | 110 | 250 | 325 |
| 16-10 | 90 | 180 | 270 | – |
| 16-11 | 35 | 110 | 250 | 325 |
| 16-13 | 35 | 110 | 250 | 325 |
| 16S-1 | 80 | – | – | 280 |
| 16S-4 | 35 | 110 | 250 | 325 |
| 16S-5 | 70 | 145 | 215 | 290 |
| 16S-6 | 90 | 180 | 270 | – |
| 16S-8 | – | 170 | 265 | – |
| 18-1 | 70 | 145 | 215 | 290 |
| 18-3 | 35 | 110 | 250 | 325 |
| 18-4 | 35 | 110 | 250 | 325 |
| 18-8 | 70 | – | – | 290 |
| 18-10 | – | 120 | 240 | – |
| 18-11 | – | 170 | 265 | – |
| 18-12 | 80 | – | – | 280 |
| 18-15 | – | 120 | 240 | – |
| 18-20 | 90 | 180 | 270 | – |
| 18-22 | 70 | 145 | 215 | 290 |
| 18-29 | 90 | 180 | 270 | – |
| 20-3 | 70 | 145 | 215 | 290 |
| 20-4 | 45 | 110 | 250 | – |
| 20-5 | 35 | 110 | 250 | 325 |
| 20-6 | 70 | 145 | 215 | 290 |
| 20-15 | 80 | – | – | 280 |
| 20-17 | 90 | 180 | 270 | – |
| 20-18 | 35 | 110 | 250 | 325 |

| Insert Arrangement | Degrees | | | |
|---|---|---|---|---|
| | W | X | Y | Z |
| 20-19 | 90 | 180 | 270 | – |
| 20-21 | 35 | 110 | 250 | 325 |
| 20-23 | 35 | 110 | 250 | 325 |
| 20-24 | 35 | 110 | 250 | 325 |
| 20-27 | 35 | 110 | 250 | 325 |
| 20-29 | 80 | – | – | 280 |
| 20-33 | – | – | – | 280 |
| 22-1 | 35 | 110 | 250 | 325 |
| 22-2 | 70 | 145 | 215 | 290 |
| 22-4 | 35 | 110 | 250 | 325 |
| 22-5 | 35 | 110 | 250 | 325 |
| 22-8 | 35 | 110 | 250 | 325 |
| 22-9 | 70 | 145 | 215 | 290 |
| 22-10 | 35 | 110 | 250 | 325 |
| 22-11 | 35 | 110 | 250 | 325 |
| 22-13 | 35 | 110 | 250 | 325 |
| 22-20 | 35 | 110 | 250 | 325 |
| 22-22 | – | 110 | 250 | – |
| 22-23 | 35 | – | 250 | – |
| 22-27 | 80 | – | 250 | 280 |
| 22-28 | 80 | – | – | 280 |
| 24-2 | 80 | – | – | 280 |
| 24-9 | 35 | 110 | 250 | 325 |
| 24-10 | 80 | – | – | 280 |
| 24-11 | 35 | 110 | 250 | 325 |
| 24-22 | 45 | 110 | 250 | – |
| 24-27 | 80 | – | – | 280 |
| 24-96 | 65 | – | – | – |
| 28-2 | 35 | 110 | 250 | 325 |
| 28-3 | 70 | 145 | 215 | 290 |
| 28-5 | 35 | 110 | 250 | 325 |
| 28-6 | 70 | 145 | 215 | 290 |

| Insert Arrangement | Degrees | | | |
|---|---|---|---|---|
| | W | X | Y | Z |
| 28-7 | 35 | 110 | 250 | 325 |
| 28-12 | 90 | 180 | 270 | – |
| 28-18 | 70 | 145 | 215 | 290 |
| 28-22 | 70 | 145 | 215 | 290 |
| 28-AY | 45 | 110 | 250 | – |
| 32-2 | 70 | 145 | 215 | 290 |
| 32-5 | 35 | 110 | 250 | 325 |
| 32-7 | 80 | 125 | 235 | 280 |
| 32-8 | 80 | 125 | 235 | 280 |
| 32-15 | 35 | 110 | 250 | 280 |
| 32-17 | 45 | 110 | 250 | – |
| 32-25 | 60 | 120 | – | – |
| 32-64* | 80 | 100 | 110 | 250 |
| 32-68 | 30 | – | – | – |
| 32-82 | 30 | – | – | – |
| 36-3 | 70 | 145 | 215 | 290 |
| 36-4 | 70 | 145 | 215 | 290 |
| 36-5 | – | 120 | 240 | – |
| 36-6 | 35 | 110 | 250 | 325 |
| 36-9 | 80 | 125 | 235 | 280 |
| 36-10 | 80 | 125 | 235 | 280 |
| 36-14 | 90 | 180 | 270 | – |
| 36-15 | 60 | 125 | 245 | 305 |
| 36-AF | 65 | – | – | – |
| 40-1 | 65 | 130 | 235 | 300 |
| 40-5 | 33 | – | – | 270 |
| 40-9 | 65 | 125 | 225 | 310 |
| 40-10 | 65 | 125 | 225 | 310 |
| 40-35 | 70 | 130 | 230 | 290 |
| 40-56 | 72 | 144 | 216 | 288 |
| 40-AG | 37 | 74 | 285 | 322 |

*Additional rotations available; consult Amphenol for information.

# GT Series
## contact arrangements

**front face of pin insert or rear face of socket insert illustrated**

| | | | | | |
|---|---|---|---|---|---|
| | Front of Socket Insert | Front of Socket Insert | | | |
| **Insert Arrangement** | **10SL-3** | **10SL-4** | **14S-2** | **14S-4** | **14S-5** |
| **Service Rating** | **A** | **A** | **Inst.** | **D** | **Inst.** |
| **Number of Contacts** | **3** | **2** | **4** | **1** | **5** |
| **Contact Size** | **16** | **16** | **16** | **16** | **16** |

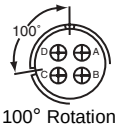

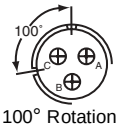


| | | | | | |
|---|---|---|---|---|---|
| | | | | 100° Rotation of 14S-2 | 100° Rotation of 14S-7 |
| **Insert Arrangement** | **14S-6** | **14S-7** | **14S-9** | **14S-10** | **14S-12** |
| **Service Rating** | **Inst.** | **A** | **A** | **Inst.** | **A** |
| **Number of Contacts** | **6** | **3** | **2** | **4** | **3** |
| **Contact Size** | **16** | **16** | **16** | **16** | **16** |

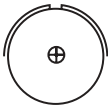
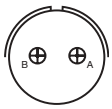
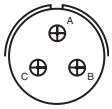

| | | | | | |
|---|---|---|---|---|---|
| **Insert Arrangement** | **14S-A7** | **16S-1** | **16S-3** | **16S-4** | **16S-5** |
| **Service Rating** | **A** | **A** | **B** | **D** | **A** |
| **Number of Contacts** | **7** | **7** | **1** | **2** | **3** |
| **Contact Size** | **16** | **16** | **16** | **16** | **16** |

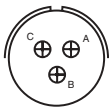
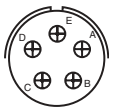

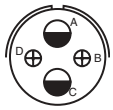

| | | | | | |
|---|---|---|---|---|---|
| **Insert Arrangement** | **16S-6** | **16S-8** | **16-2** | **16-7** | **16-9** |
| **Service Rating** | **A** | **A** | **E** | **A** | **A** |
| **Number of Contacts** | **3** | **5** | **1** | **1 2** | **2 2** |
| **Contact Size** | **16** | **16** | **12** | **8 16** | **12 16** |

| | | | | | |
|---|---|---|---|---|---|
| **CONTACT LEGEND** | **16** | **12** | **8** | **4** | **0** |

# GT Series
## contact arrangements

**front face of pin insert or rear face of socket insert illustrated**

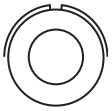

| | | | | | |
|---|---|---|---|---|---|
| **Insert Arrangement** | **16-10** | **16-11** | **16-12** | **16-13** | **16-59** |
| **Service Rating** | **A** | **A** | **A** | **A** | **A** |
| **Number of Contacts** | **3** | **2** | **1** | **2*** | **4** |
| **Contact Size** | **12** | **12** | **4** | **12** | **12** |

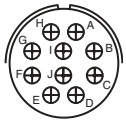

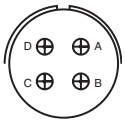

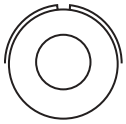

| | | | | | | |
|---|---|---|---|---|---|---|
| **Insert Arrangement** | **18-1** | **18-3** | **18-4** | **18-5** | **18-6** | **18-7** |
| **Service Rating** | **B, C, F, G = A; Bal. = Inst.** | **D** | **D** | **D** | **D** | **B** |
| **Number of Contacts** | **10** | **2** | **4** | **2 1** | **1** | **1** |
| **Contact Size** | **16** | **12** | **16** | **12 16** | **4** | **8** |

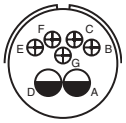


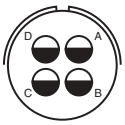

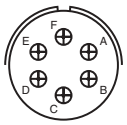

| | | | | | | |
|---|---|---|---|---|---|---|
| **Insert Arrangement** | **18-8** | **18-9** | **18-10** | **18-11** | **18-12** | **18-13** |
| **Service Rating** | **A** | **Inst.** | **A** | **A** | **A** | **A** |
| **Number of Contacts** | **1 7** | **2 5** | **4** | **5** | **6** | **1 3** |
| **Contact Size** | **12 16** | **12 16** | **12** | **12** | **16** | **8 12** |

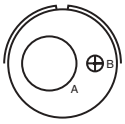


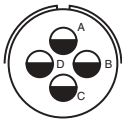

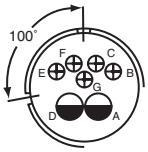


100° Rotation of 18-9

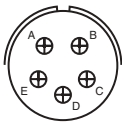


| | | | | | | |
|---|---|---|---|---|---|---|
| **Insert Arrangement** | **18-14** | **18-15** | **18-16** | **18-17** | **18-19** | **18-20** |
| **Service Rating** | **A** | **A** | **C** | **Inst.** | **A** | **A** |
| **Number of Contacts** | **1 1** | **4**** | **1** | **2 5** | **10** | **5** |
| **Contact Size** | **4 16** | **12** | **12** | **12 16** | **16** | **16** |

| | | | | | |
|---|---|---|---|---|---|
| **CONTACT LEGEND** | **16** | **12** | **8** | **4** | **0** |

* A = Iron; B = Constantan
**A, C = Iron; B, D = Constantan

# GT Series
## contact arrangements

**front face of pin insert or rear face of socket insert illustrated**

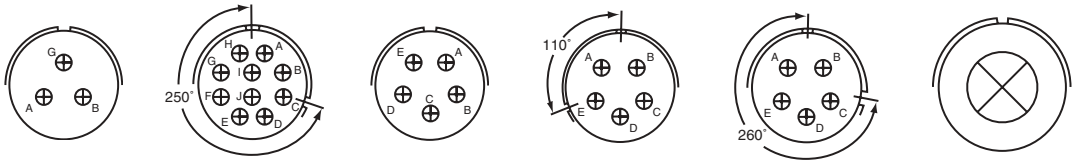


250° Rotation of 18-1 | 110° Rotation of 18-20 | 260° Rotation of 18-20

| | | | | | | |
|---|---|---|---|---|---|---|
| **Insert Arrangement** | **18-22** | **18-24** | **18-29** | **18-30** | **18-31** | **20-2** |
| **Service Rating** | **D** | **B, C, F, G = A; Bal. = Inst.** | **A** | **A** | **A** | **D** |
| **Number of Contacts** | **3** | **10** | **5** | **5** | **5** | **1** |
| **Contact Size** | **16** | **16** | **16** | **16** | **16** | **0** |

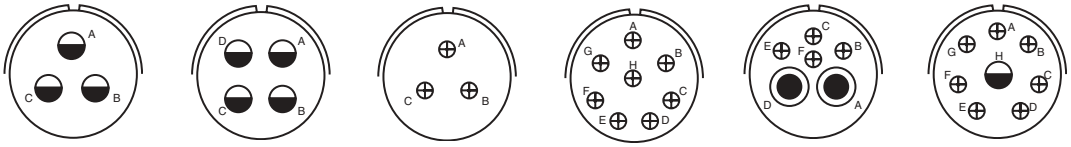

| | | | | | | |
|---|---|---|---|---|---|---|
| **Insert Arrangement** | **20-3** | **20-4** | **20-6** | **20-7** | **20-8** | **20-9** |
| **Service Rating** | **D** | **D** | **D** | **A, B, H, G = D; C, D, E, F = A** | **Inst.** | **H = D; Bal. = A** |
| **Number of Contacts** | **3** | **4** | **3** | **8** | **2 4** | **1 7** |
| **Contact Size** | **12** | **12** | **16** | **16** | **8 16** | **12 16** |

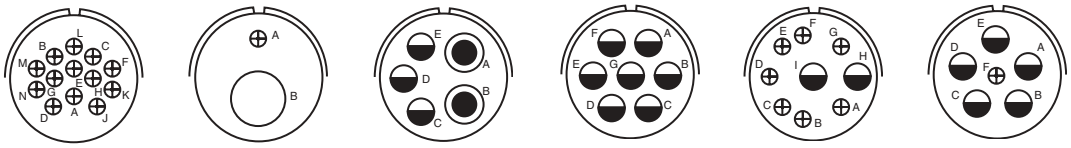

| | | | | | | |
|---|---|---|---|---|---|---|
| **Insert Arrangement** | **20-11** | **20-12** | **20-14** | **20-15** | **20-16** | **20-17** |
| **Service Rating** | **Inst.** | **A** | **A** | **A** | **A** | **A** |
| **Number of Contacts** | **13** | **1 1** | **2 3** | **7** | **2 7** | **5 1** |
| **Contact Size** | **16** | **4 16** | **8 12** | **12** | **12 16** | **12 16** |

| | | | | | |
|---|---|---|---|---|---|
| **CONTACT LEGEND** | **16** | **12** | **8** | **4** | **0** |

# GT Series
## contact arrangements

**front face of pin insert or rear face of socket insert illustrated**

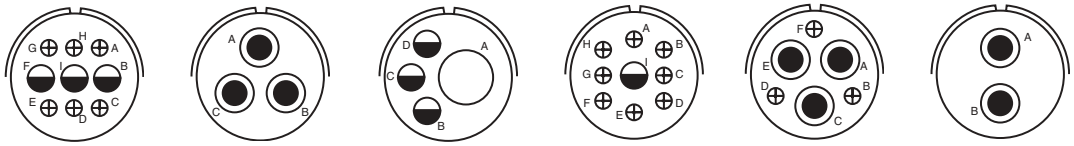

| Insert Arrangement | 20-18 | 20-19 | 20-20 | 20-21 | 20-22 | 20-23 |
|---|---|---|---|---|---|---|
| Service Rating | A | A | A | A | A | A |
| Number of Contacts | 3 6 | 3 | 1 3 | 1 8 | 3 3 | 2 |
| Contact Size | 12 16 | 8 | 4 12 | 12 16 | 8 16 | 8 |

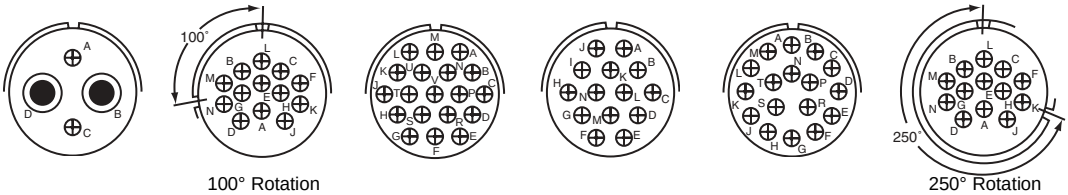


100° Rotation of 20-11

250° Rotation of 20-11

| Insert Arrangement | 20-24 | 20-25 | 20-26 | 20-27 | 20-29 | 20-30 |
|---|---|---|---|---|---|---|
| Service Rating | A | Inst. | A | A | A | Inst. |
| Number of Contacts | 2 2 | 13 | 19 | 14 | 17 | 13 |
| Contact Size | 8 16 | 16 | 16 | 16 | 16 | 16 |

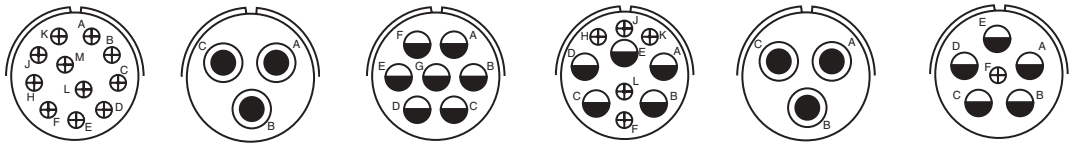

| Insert Arrangement | 20-33 | 20-51 | 20-57 | 20-58 | 20-59 | 20-66 |
|---|---|---|---|---|---|---|
| Service Rating | A | A | A | A | A | A |
| Number of Contacts | 11 | 3* | 7* | 5 5 | 3* | 1 5 |
| Contact Size | 16 | 8 | 12 for #14 or 16 wire | 12 16 | 8 for #10 or 12 wire | 16 12 for #10 wire |

**CONTACT LEGEND** 16 12 8 4 0

* Solderless

# GT Series
## contact arrangements

**front face of pin insert or rear face of socket insert illustrated**

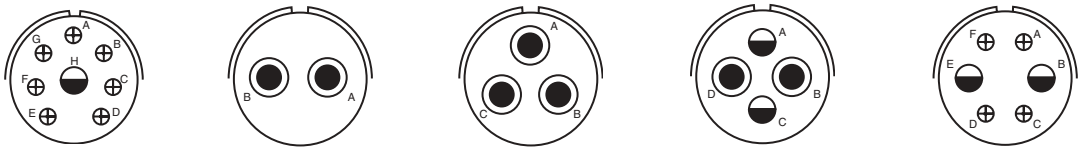


| | | | | | |
|---|---|---|---|---|---|
| **Insert Arrangement** | **20-79** | **22-1** | **22-2** | **22-4** | **22-5** |
| **Service Rating** | **H=D; Bal. = A** | **D** | **D** | **A** | **D** |
| **Number of Contacts** | **7* 1*** | **2** | **3** | **2 2** | **2 4** |
| **Contact Size** | **16 12 for #16 wire** | **8** | **8** | **8 12** | **12 16** |

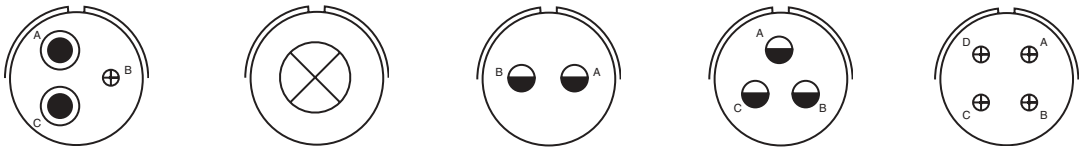


| | | | | | |
|---|---|---|---|---|---|
| **Insert Arrangement** | **22-6** | **22-7** | **22-8** | **22-9** | **22-10** |
| **Service Rating** | **D** | **E** | **E** | **E** | **E** |
| **Number of Contacts** | **2 1** | **1** | **2** | **3** | **4** |
| **Contact Size** | **8 16** | **0** | **12** | **12** | **16** |

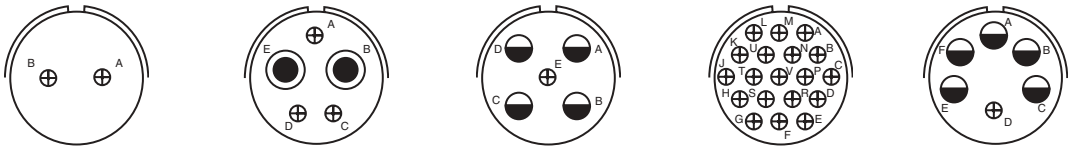


| | | | | | |
|---|---|---|---|---|---|
| **Insert Arrangement** | **22-11** | **22-12** | **22-13** | **22-14** | **22-15** |
| **Service Rating** | **B** | **D** | **E = D; A, B, C, D = A** | **A** | **D = E; A, B, C, E, F = A** |
| **Number of Contacts** | **2** | **2 3** | **4 1** | **19** | **5 1** |
| **Contact Size** | **16** | **8 16** | **12 16** | **16** | **12 16** |

**CONTACT LEGEND** **16 12 8 4 0**

* Solderless

# GT Series
## contact arrangements

**front face of pin insert or rear face of socket insert illustrated**

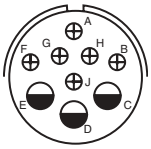
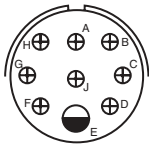
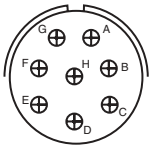
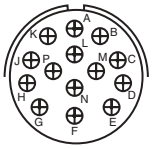
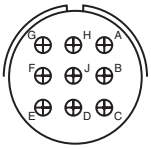

| | | | | | |
|---|---|---|---|---|---|
| **Insert Arrangement** | **22-16** | **22-17** | **22-18** | **22-19** | **22-20** |
| **Service Rating** | **A** | **A = D; Bal. = A** | **A, B, F, G, H = D; C, D, E = A** | **A** | **A** |
| **Number of Contacts** | **3 6** | **1 8** | **8** | **14** | **9** |
| **Contact Size** | **12 16** | **12 16** | **16** | **16** | **16** |

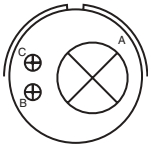
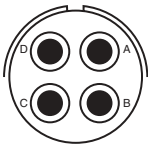
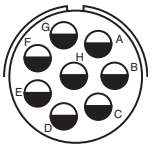
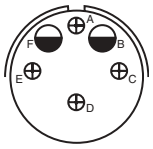
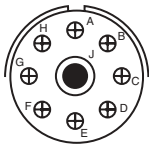

| | | | | | |
|---|---|---|---|---|---|
| **Insert Arrangement** | **22-21** | **22-22** | **22-23** | **22-24** | **22-27** |
| **Service Rating** | **A** | **A** | **H = D; Bal. = A** | **C, D, E = D; A, B, F = A** | **J = D; Bal. = A** |
| **Number of Contacts** | **1 2** | **4** | **8** | **2 4** | **1 8** |
| **Contact Size** | **0 16** | **8** | **12** | **12 16** | **8 16** |

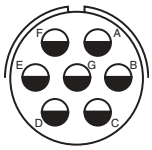
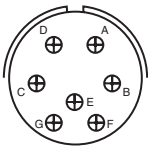
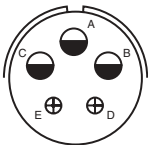
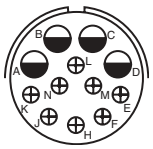
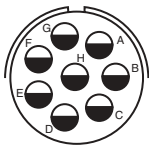

| | | | | | |
|---|---|---|---|---|---|
| **Insert Arrangement** | **22-28** | **22-33** | **22-34** | **22-63** | **22-65** |
| **Service Rating** | **A** | **A, B, C, D = D; E. F. G = A** | **D** | **A** | **H = D; Bal. = A** |
| **Number of Contacts** | **7** | **7** | **3 2** | **4 8** | **8*** |
| **Contact Size** | **12** | **16** | **12 16** | **12 16** | **12 for #14 or 16 wire** |

**CONTACT LEGEND** **16 12 8 4 0**

* Solderless

# GT Series
## contact arrangements

**front face of pin insert or rear face of socket insert illustrated**

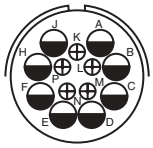
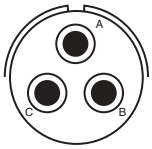
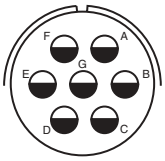
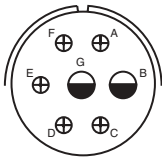
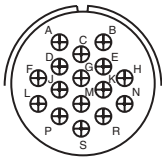

| | | | | | |
|---|---|---|---|---|---|
| **Insert Arrangement** | **22-70** | **22-80** | **24-2** | **24-3** | **24-5** |
| **Service Rating** | **A** | **A** | **D** | **D** | **A** |
| **Number of Contacts** | **8 5** | **3*** | **7** | **2 5** | **16** |
| **Contact Size** | **12 16** | **8 for #10 or 12 wire** | **12** | **12 16** | **16** |

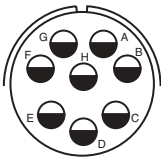
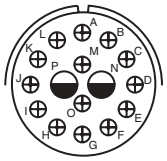
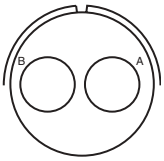
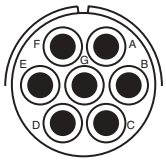
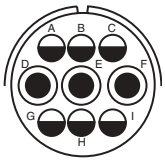

| | | | | | |
|---|---|---|---|---|---|
| **Insert Arrangement** | **24-6** | **24-7** | **24-9** | **24-10** | **24-11** |
| **Service Rating** | **A, G, H = D; Bal. = A** | **A** | **A** | **A** | **A** |
| **Number of Contacts** | **8** | **2 14** | **2** | **7** | **3 6** |
| **Contact Size** | **12** | **12 16** | **4** | **8** | **8 12** |

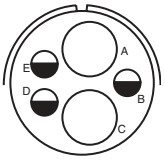
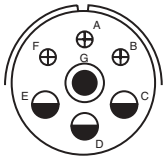
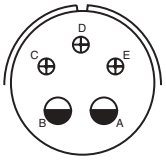
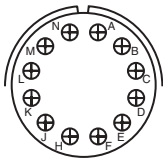
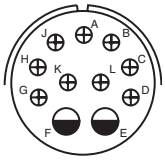

| | | | | | |
|---|---|---|---|---|---|
| **Insert Arrangement** | **24-12** | **24-16** | **24-17** | **24-19** | **24-20** |
| **Service Rating** | **A** | **A, B, F, G = D; C, D, E = A** | **D** | **A** | **D** |
| **Number of Contacts** | **2 3** | **1 3 3** | **2 3** | **12** | **2 9** |
| **Contact Size** | **4 12** | **8 12 16** | **12 16** | **16** | **12 16** |

* Solderless

**CONTACT LEGEND** **16 12 8 4 0**

# GT Series
## contact arrangements

**front face of pin insert or rear face of socket insert illustrated**

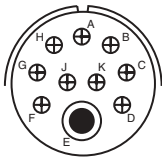
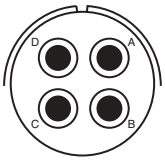
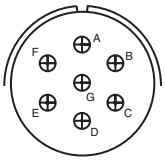
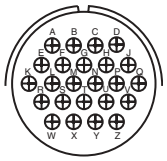
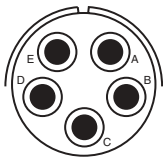

| | | | | | |
|---|---|---|---|---|---|
| **Insert Arrangement** | **24-21** | **24-22** | **24-27** | **24-28** | **24-51** |
| **Service Rating** | **D** | **D** | **E** | **Inst.** | **A** |
| **Number of Contacts** | **1 9** | **4** | **7** | **24** | **5*** |
| **Contact Size** | **8 16** | **8** | **16** | **16** | **B, E for AN #10 or 12 wire<br>A, C, D for AN #8 wire** |

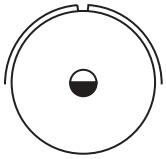
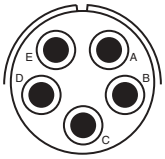

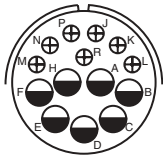
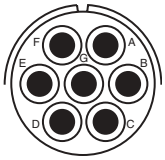

| | | | | | |
|---|---|---|---|---|---|
| **Insert Arrangement** | **24-52** | **24-53** | **24-58** | **24-59** | **24-60** |
| **Service Rating** | **Hi-Volt** | **A** | **A** | **A** | **A** |
| **Number of Contacts** | **1** | **5*** | **3 3 7** | **7 7** | **7*** |
| **Contact Size** | **12** | **8** | **8 12 16** | **12 16** | **8 for #10 or 12 wire** |

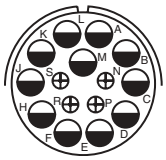
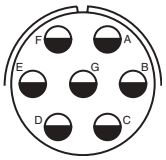
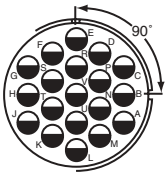
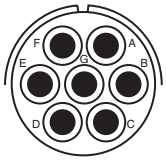
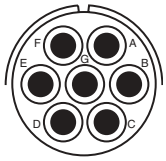

| | | | | | |
|---|---|---|---|---|---|
| **Insert Arrangement** | **24-65** | **24-66** | **24-67** | **24-71** | **24-75** |
| **Service Rating** | **A** | **D** | **Inst.** | **A** | **A** |
| **Number of Contacts** | **11 4** | **7** | **19** | **2* 5*** | **5 2** |
| **Contact Size** | **12 16** | **12** | **12** | **8 8 for #10 or 12 wire** | **8 8 for #16 wire** |

**CONTACT LEGEND** **16 12 8 4 0**

* Solderless

# GT Series
## contact arrangements

**front face of pin insert or rear face of socket insert illustrated**

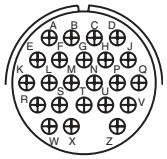
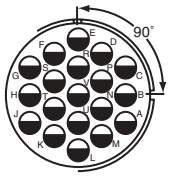

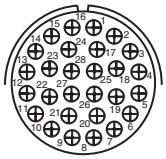

| | | | | | |
|---|---|---|---|---|---|
| **Insert Arrangement** | **24-79** | **24-80** | **24-84** | **24-96** | **24-AJ** |
| **Service Rating** | **A** | **Inst.** | **A** | **Inst.** | **A** |
| **Number of Contacts** | **5** | **23** | **1 18** | **28** | **25** |
| **Contact Size** | **8** | **16** | **12 12 (Coax) RG-188/U or RG-174/U** | **16** | **16** |

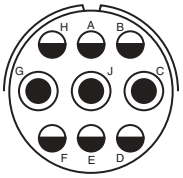
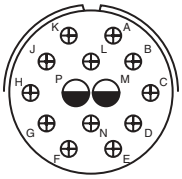
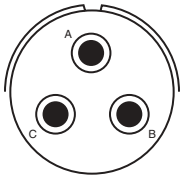
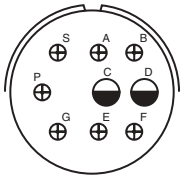

| | | | | |
|---|---|---|---|---|
| **Insert Arrangement** | **28-1** | **28-2** | **28-3** | **28-4** |
| **Service Rating** | **A, J, E = D; Bal. = A** | **D** | **E** | **G, P, S = E; Bal. = D** |
| **Number of Contacts** | **3 6** | **2 12** | **3** | **2 7** |
| **Contact Size** | **8 12** | **12 16** | **8** | **12 16** |

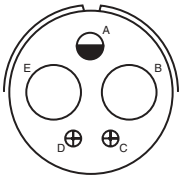
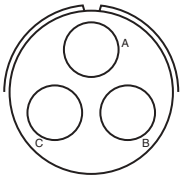
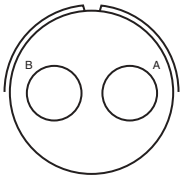
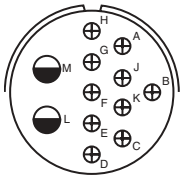

| | | | | |
|---|---|---|---|---|
| **Insert Arrangement** | **28-5** | **28-6** | **28-7** | **28-8** |
| **Service Rating** | **D** | **D** | **D** | **L, M = E; B = D; Bal. = A** |
| **Number of Contacts** | **2 1 2** | **3** | **2** | **2 10** |
| **Contact Size** | **4 12 16** | **4** | **4** | **12 16** |

| | | | | | |
|---|---|---|---|---|---|
| **CONTACT LEGEND** | **16** | **12** | **8** | **4** | **0** |

# GT Series
## contact arrangements

**front face of pin insert or rear face of socket insert illustrated**

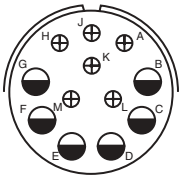

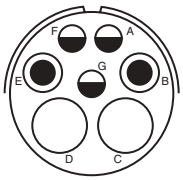

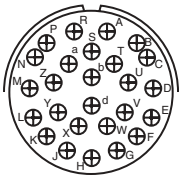

| | | | | |
|---|---|---|---|---|
| **Insert Arrangement** | **28-9** | **28-10** | **28-11** | **28-12** |
| **Service Rating** | **D** | **G = D; Bal. = A** | **A** | **A** |
| **Number of Contacts** | **6 6** | **2 2 3** | **4 18** | **26** |
| **Contact Size** | **12 16** | **4 8 12** | **12 16** | **16** |

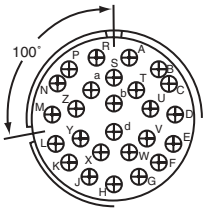


100° Rotation
of 32-6

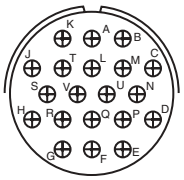

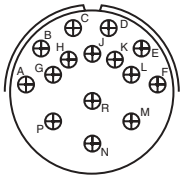

| | | | | |
|---|---|---|---|---|
| **Insert Arrangement** | **28-13** | **28-15** | **28-16** | **28-17** |
| **Service Rating** | **A** | **A** | **A** | **R = B; M, N, P = D; A to L = A** |
| **Number of Contacts** | **26** | **35** | **20** | **15** |
| **Contact Size** | **16** | **16** | **16** | **16** |

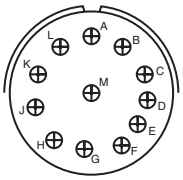

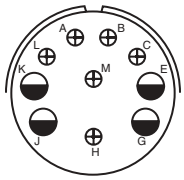

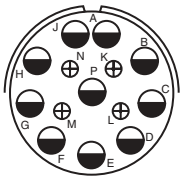

| | | | |
|---|---|---|---|
| **Insert Arrangement** | **28-18** | **28-19** | **28-20** |
| **Service Rating** | **M = C; G, H, J, K,L = D; A, B = A; Bal. = Inst.** | **H, M = B; A, B, = D; Bal. = A** | **A** |
| **Number of Contacts** | **12** | **4 6** | **10 4** |
| **Contact Size** | **16** | **12 16** | **12 16** |

* Solderless

**CONTACT LEGEND** **16** **12** **8** **4** **0**

# GT Series
## contact arrangements

**front face of pin insert or rear face of socket insert illustrated**

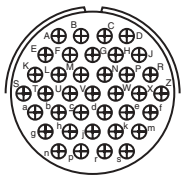
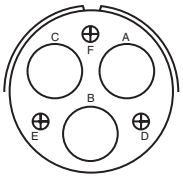
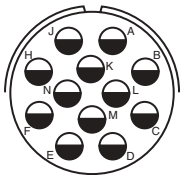
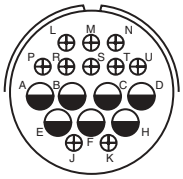

| | | | | |
|---|---|---|---|---|
| **Insert Arrangement** | **28-21** | **28-22** | **28-51** | **28-59** |
| **Service Rating** | **A** | **D** | **A** | **A** |
| **Number of Contacts** | **37** | **3 3** | **12** | **7 10** |
| **Contact Size** | **16** | **4 16** | **12** | **12 16** |

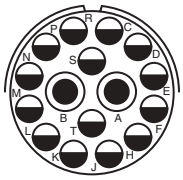
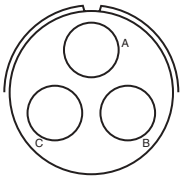
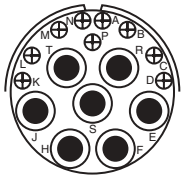
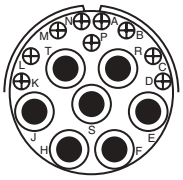

| | | | | |
|---|---|---|---|---|
| **Insert Arrangement** | **28-66** | **28-72** | **28-74** | **28-75** |
| **Service Rating** | **A** | **–** | **A** | **A** |
| **Number of Contacts** | **2 14** | **3** | **9* 4* 3*** | **9* 7*** |
| **Contact Size** | **8 12** | **4 (Coax) RG-59A/U or RG-62A/U** | **16 8 8 for #10 wire (S, T, R)** | **16 8 for #10 wire** |

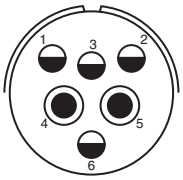
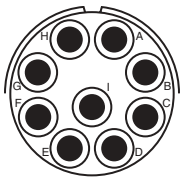
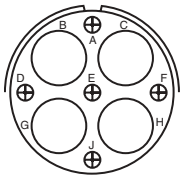

| | | | | |
|---|---|---|---|---|
| **Insert Arrangement** | **28-79** | **28-82** | **28-84** | **28-AY** |
| **Service Rating** | **A** | **D** | **A** | **A** |
| **Number of Contacts** | **7 9** | **2 4** | **9** | **4 5** |
| **Contact Size** | **8 16** | **8 12** | **8** | **4 16** |

* Solderless

**CONTACT LEGEND** **16** **12** **8** **4** **0**

# GT Series
## contact arrangements

**front face of pin insert or rear face of socket insert illustrated**

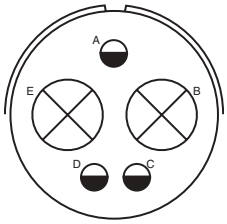


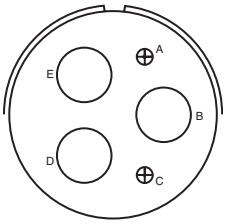


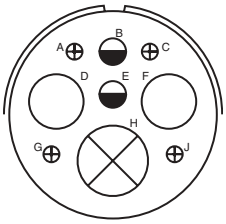


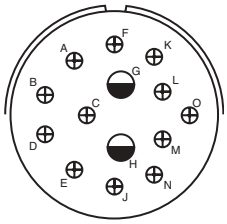


| | | | | |
|---|---|---|---|---|
| **Insert Arrangement** | **32-1** | **32-2** | **32-3** | **32-4** |
| **Service Rating** | **A = E; B, C, D, E = D** | **E** | **D** | **F, J, K, N = A:, Bal. = D** |
| **Number of Contacts** | **2 3** | **3 2** | **1 2 2 4** | **2 12** |
| **Contact Size** | **0 12** | **4 16** | **0 4 12 16** | **12 16** |

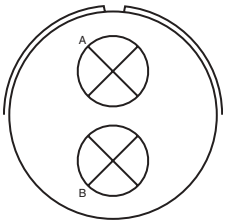


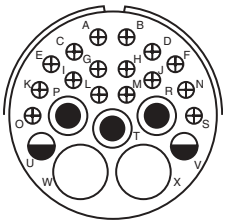


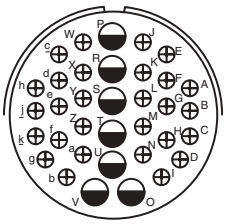


| | | | |
|---|---|---|---|
| **Insert Arrangement** | **32-5** | **32-6** | **32-7** |
| **Service Rating** | **D** | **A** | **A, B, h, j = Inst.; Bal. = A** |
| **Number of Contacts** | **2** | **2 3 2 16** | **7 28** |
| **Contact Size** | **0** | **4 8 12 16** | **12 16** |

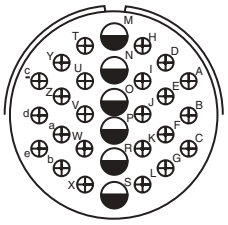


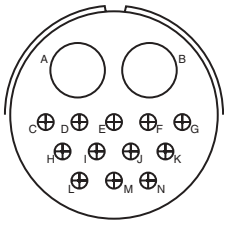


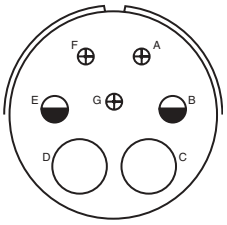


| | | | |
|---|---|---|---|
| **Insert Arrangement** | **32-8** | **32-9** | **32-10** |
| **Service Rating** | **A** | **D** | **A, F = E; G = B; B, E = D; C, D = A** |
| **Number of Contacts** | **6 24** | **2 12** | **2 2 3** |
| **Contact Size** | **12 16** | **4 16** | **4 8 16** |

**CONTACT LEGEND** **16 12 8 4 0**

# GT Series
## contact arrangements

**front face of pin insert or rear face of socket insert illustrated**

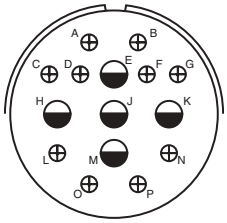

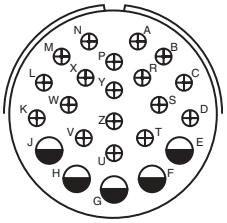

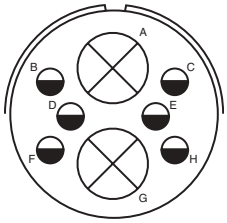

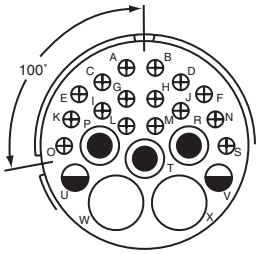


100° Rotation of 32-6

| | | | | |
|---|---|---|---|---|
| **Insert Arrangement** | **32-12** | **32-13** | **32-15** | **32-16** |
| **Service Rating** | **C, D, E, F, G = A; Bal. = D** | **D** | **D** | **A** |
| **Number of Contacts** | **5 10** | **5 18** | **2 6** | **2 3 2 16** |
| **Contact Size** | **12 16** | **12 16** | **0 12** | **4 8 12 16** |

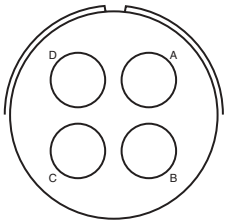

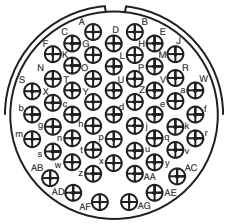

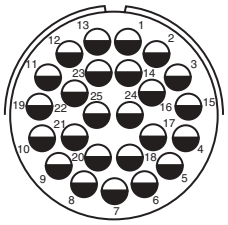

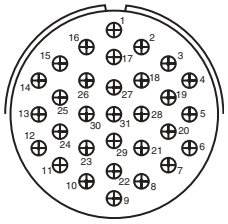

| | | | | |
|---|---|---|---|---|
| **Insert Arrangement** | **32-17** | **32-22** | **32-25** | **32-31** |
| **Service Rating** | **D** | **A** | **A** | **A** |
| **Number of Contacts** | **4** | **54** | **25** | **31** |
| **Contact Size** | **4** | **16** | **12** | **16** |

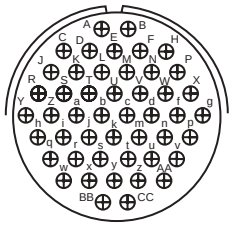

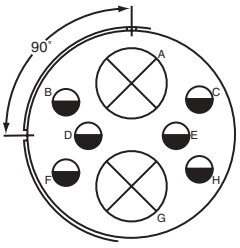


90° CW Rotation of 32-15

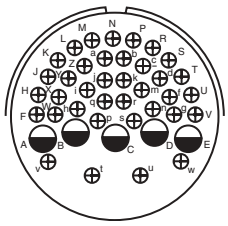

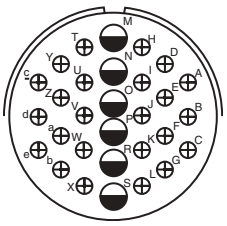

| | | | | |
|---|---|---|---|---|
| **Insert Arrangement** | **32-48** | **32-52** | **32-53** | **32-56** |
| **Service Rating** | **Inst.** | **D** | **t, u = E; Bal. = Inst.** | **A** |
| **Number of Contacts** | **48** | **2 6** | **5 37** | **24 6** |
| **Contact Size** | **16** | **0 12** | **12 16** | **16 12 for #10 wire** |

| | | | | | |
|---|---|---|---|---|---|
| **CONTACT LEGEND** | **16** | **12** | **8** | **4** | **0** |

# GT Series
## contact arrangements

**front face of pin insert or rear face of socket insert illustrated**

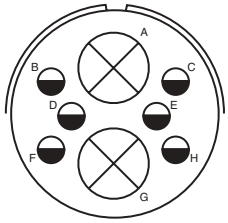


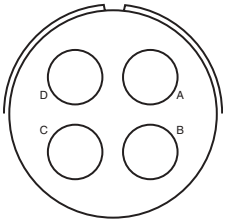


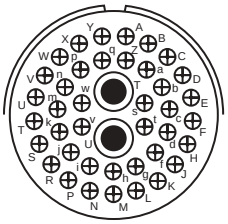

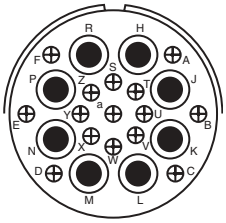

| | | | | | | | | |
|---|---|---|---|---|---|---|---|---|
| **Insert Arrangement** | **32-57** | | **32-58** | **32-59** | | **32-60** | | |
| **Service Rating** | ** | | – | A | | A | | |
| **Number of Contacts** | 6 | 2 | 4 | 40 | 2 | 15 | 8 | |
| **Contact Size** | 12 | 0 (Coax) RG-71/U | 4 (Coax) RG-161/U or RG-179/U | 16 | 8 (Coax) RG-161/U | 16 | 8 (Coax) RG-124/U | |

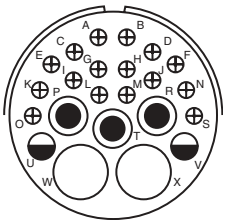

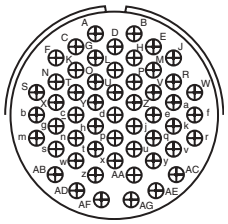

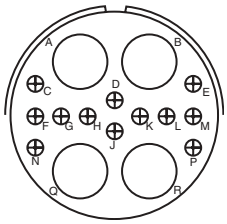

| | | | | | | | | |
|---|---|---|---|---|---|---|---|---|
| **Insert Arrangement** | **32-62** | | | | | **32-64** | **32-68** | |
| **Service Rating** | ** | | | | | Inst. | A | |
| **Number of Contacts** | 2 | 1 | 2 | 16 | 2 | 54 | 12 | 4 |
| **Contact Size** | 4 | 8 | 12 | 16 | 8 (Coax) RG-124/U | 16 | 16 | 4 (Coax) RG-58C/U |

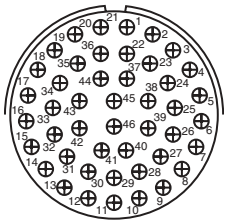

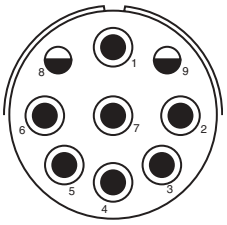

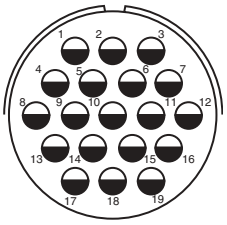

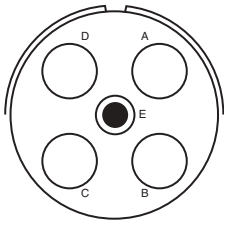


| | | | | | | | |
|---|---|---|---|---|---|---|---|
| **Insert Arrangement** | **32-73** | | **32-75** | **32-76** | | **32-79** | |
| **Service Rating** | A | | 8, 9 = D | A | | D | |
| **Number of Contacts** | 46 | | 2 7 | 19 | | 4 | 1 |
| **Contact Size** | 16 | | 12 8 (Coax) RG-180B/U | 12 | | 4 | 8 |

| | | | | | |
|---|---|---|---|---|---|
| **CONTACT LEGEND** | **16** | **12** | **8** | **4** | **0** |

** Consult Amphenol, Sidney, NY for service rating of power contacts.

# GT Series
## contact arrangements

**front face of pin insert or rear face of socket insert illustrated**

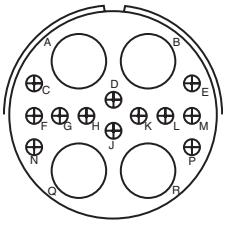
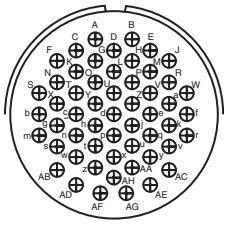
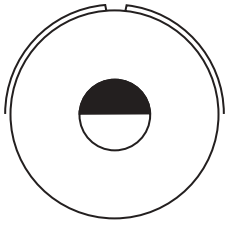
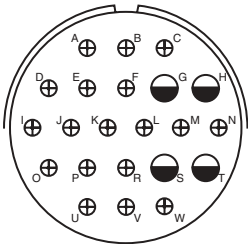

| | | | | |
|---|---|---|---|---|
| **Insert Arrangement** | **32-82** | **32-AF** | **32-AM** | **36-1** |
| **Service Rating** | **A** | **A** | **A** | **D** |
| **Number of Contacts** | **4 12** | **55** | **1** | **4 18** |
| **Contact Size** | **4 16** | **16** | **4/0** | **12 16** |

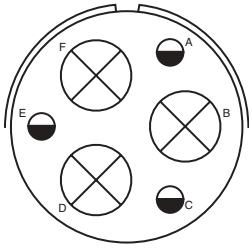
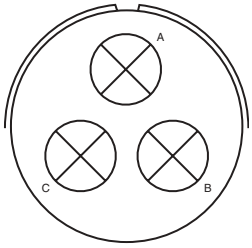
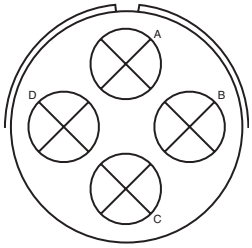

| | | | |
|---|---|---|---|
| **Insert Arrangement** | **36-3** | **36-4** | **36-5** |
| **Service Rating** | **D** | **A = D; B, C = A** | **A** |
| **Number of Contacts** | **3 3** | **3** | **4** |
| **Contact Size** | **0 12** | **0** | **0** |

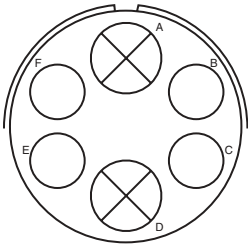
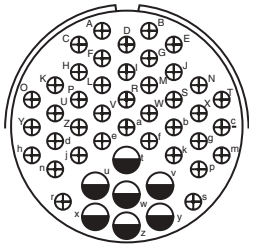
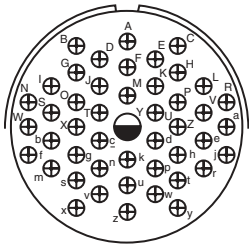

| | | | |
|---|---|---|---|
| **Insert Arrangement** | **36-6** | **36-7** | **36-8** |
| **Service Rating** | **A** | **A** | **A** |
| **Number of Contacts** | **2 4** | **7 40** | **1 46** |
| **Contact Size** | **0 4** | **12 16** | **12 16** |

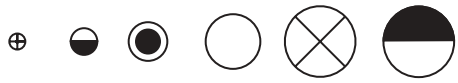

**CONTACT LEGEND** **16 12 8 4 0 4/0**

.

# GT Series
## contact arrangements

**front face of pin insert or rear face of socket insert illustrated**

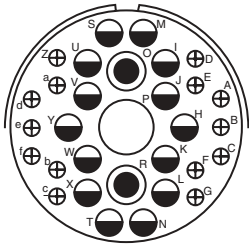

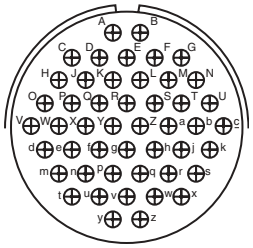

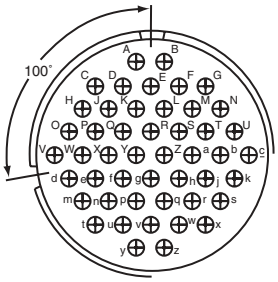


100° Rotation
of 36-10

| | | | |
|---|---|---|---|
| **Insert Arrangement** | **36-9** | **36-10** | **36-11** |
| **Service Rating** | **A** | **A** | **A** |
| **Number of Contacts** | **1 2 14 14** | **48** | **48** |
| **Contact Size** | **4 8 12 16** | **16** | **16** |

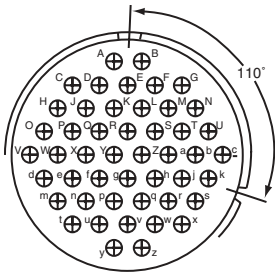


110° Rotation
of 36-10

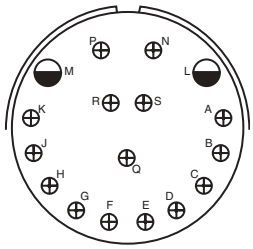

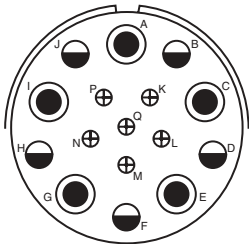

| | | | |
|---|---|---|---|
| **Insert Arrangement** | **36-12** | **36-13** | **36-14** |
| **Service Rating** | **A** | **N, P, Q = E; Bal. = A** | **D** |
| **Number of Contacts** | **48** | **2 15** | **5 5 6** |
| **Contact Size** | **16** | **12 16** | **8 12 16** |

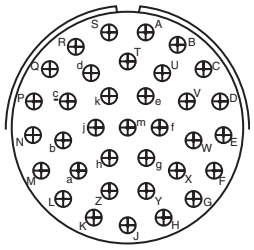

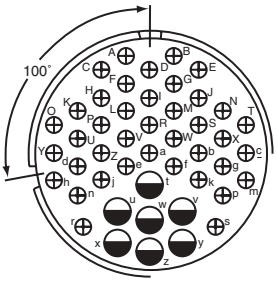


100° Rotation
of 36-7

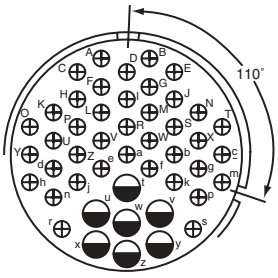


110° Rotation
of 36-7

| | | | |
|---|---|---|---|
| **Insert Arrangement** | **36-15** | **36-16** | **36-17** |
| **Service Rating** | **M = D; Bal. = A** | **A** | **A** |
| **Number of Contacts** | **35** | **7 40** | **7 40** |
| **Contact Size** | **16** | **12 16** | **12 16** |

| | | | | | |
|---|---|---|---|---|---|
| **CONTACT LEGEND** | **16** | **12** | **8** | **4** | **0** |

# GT Series
## contact arrangements

**front face of pin insert or rear face of socket insert illustrated**

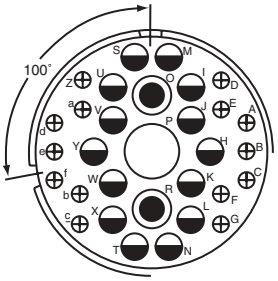


100° Rotation
of 36-9

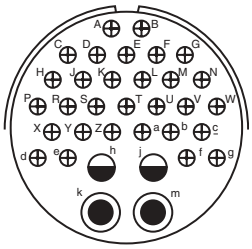

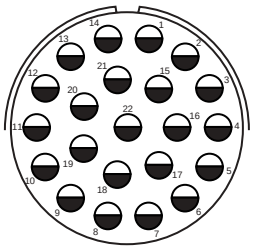

| | | | | | | | | | |
|---|---|---|---|---|---|---|---|---|---|
| **Insert Arrangement** | **36-18** | | | | **36-20** | | | **36-22** | |
| **Service Rating** | **A** | | | | **A** | | | **D** | |
| **Number of Contacts** | **1** | **2** | **14** | **14** | **2** | **2** | **30** | **22** | |
| **Contact Size** | **4** | **8** | **12** | **16** | **8** | **12** | **16** | **12** | |

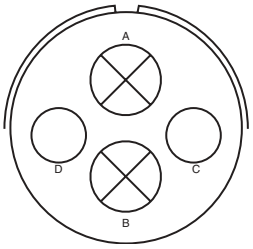

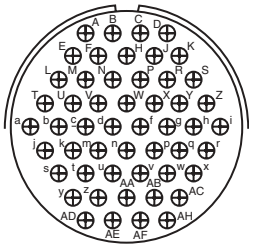

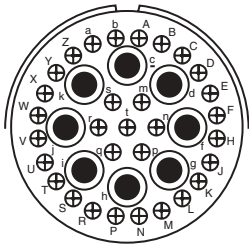

| | | | | | | | | |
|---|---|---|---|---|---|---|---|---|
| **Insert Arrangement** | **36-51** | | **36-52** | | **36-54** | | | |
| **Service Rating** | **D** | | **A** | | **A** | | | |
| **Number of Contacts** | **2** | **2** | **52** | | **8** | **31** | | |
| **Contact Size** | **0** | **4** | **16** | | **8** | **16** | | |

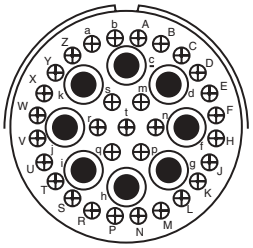

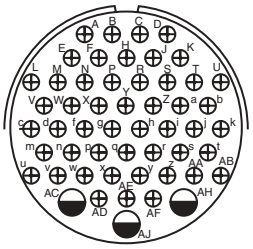

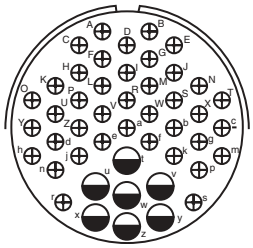

| | | | | | | | | |
|---|---|---|---|---|---|---|---|---|
| **Insert Arrangement** | **36-55** | | **36-59** | | **36-60** | | | |
| **Service Rating** | **A** | | **A** | | **A** | | | |
| **Number of Contacts** | **31** | **8** | **50** | **3** | **40** | **7** | | |
| **Contact Size** | **16** | **8 for #6 wire** | **16** | **12 for #10 wire** | **16** | **12 for #10 wire** | | |

**CONTACT LEGEND** **16** **12** **8** **4** **0**

# GT Series
## contact arrangements

**front face of pin insert or rear face of socket insert illustrated**

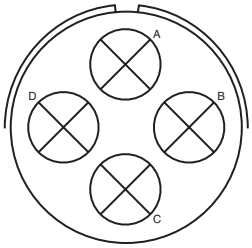


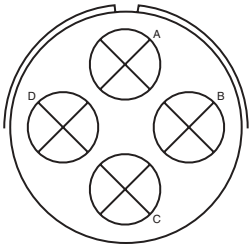


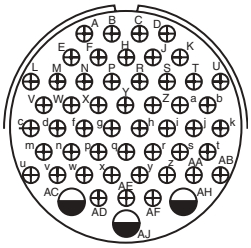

| | | | |
|---|---|---|---|
| **Insert Arrangement** | **36-64** | **36-65** | **36-71** |
| **Service Rating** | **–** | **–** | **A** |
| **Number of Contacts** | **4** | **4** | **3 50** |
| **Contact Size** | **0 (Coax) RG-11/U RG-12/U, or RG-13/U** | **0 (Coax) RG-59/U, RG-62/U or RG-71/U** | **12 16** |

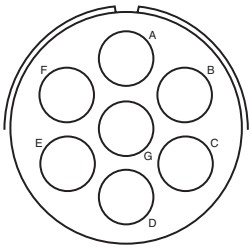


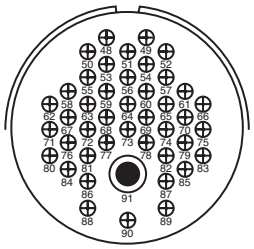

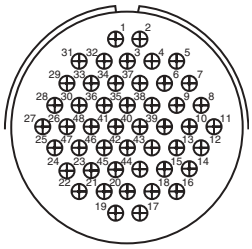

| | | | |
|---|---|---|---|
| **Insert Arrangement** | **36-73** | **36-74** | **36-75** |
| **Service Rating** | **–** | **A** | **A** |
| **Number of Contacts** | **7** | **43 1** | **48** |
| **Contact Size** | **4 (Coax) RG-62B/U** | **16 8 (Coax) RG-187/B** | **16 for #14 wire** |

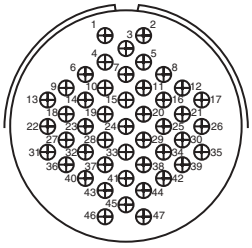

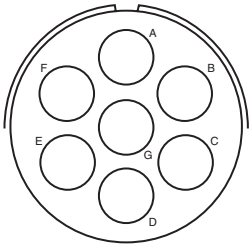


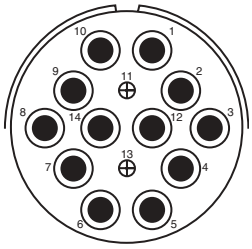

| | | | |
|---|---|---|---|
| **Insert Arrangement** | **36-76** | **36-77** | **36-78** |
| **Service Rating** | **A** | **D** | **A** |
| **Number of Contacts** | **47** | **7** | **2 12** |
| **Contact Size** | **16** | **4** | **16 8** |

**CONTACT LEGEND** **16** **12** **8** **4** **0**

# GT Series
## contact arrangements

**front face of pin insert or rear face of socket insert illustrated**

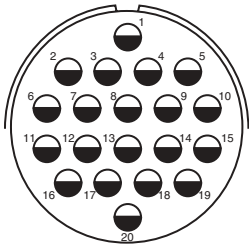

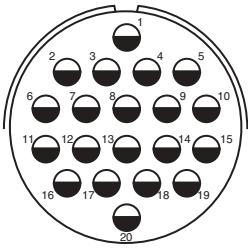

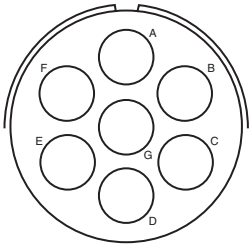

| | | | |
|---|---|---|---|
| **Insert Arrangement** | **36-79** | **36-80** | **36-83** |
| **Service Rating** | **A** | **A** | **–** |
| **Number of Contacts** | **20** | **20** | **7** |
| **Contact Size** | **12** | **12 for #10 wire** | **4 (Coax) RG-58/U** |

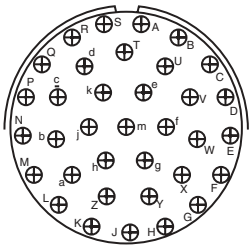

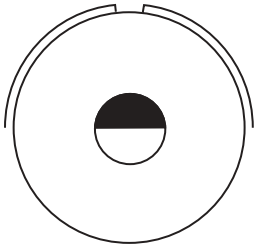

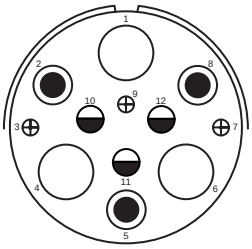

| | | | |
|---|---|---|---|
| **Insert Arrangement** | **36-85** | **36-97** | **36-99** |
| **Service Rating** | **M = D; Bal. = A** | **C** | **D** |
| **Number of Contacts** | **35** | **1** | **3 3 3 3** |
| **Contact Size** | **16 for #12 wire** | **4/0** | **4 8 12 16** |

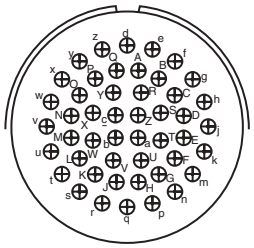

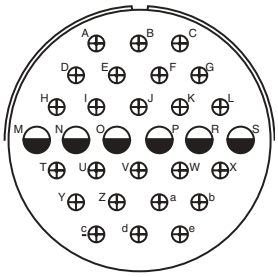

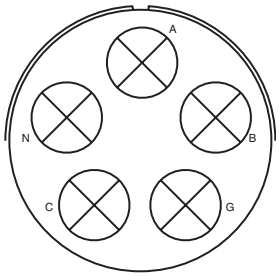

| | | | |
|---|---|---|---|
| **Insert Arrangement** | **36-AF** | **40-1** | **40-5** |
| **Service Rating** | **A** | **D** | **A** |
| **Number of Contacts** | **48** | **6 24** | **5** |
| **Contact Size** | **16** | **12 16** | **0** |

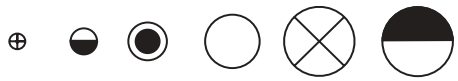

**CONTACT LEGEND** **16** **12** **8** **4** **0** **4/0**

# GT Series
## contact arrangements

**front face of pin insert or rear face of socket insert illustrated**

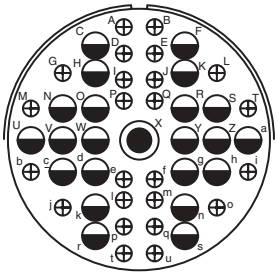

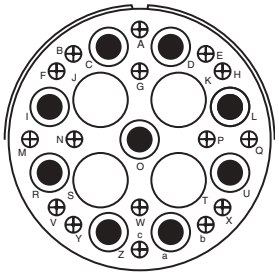

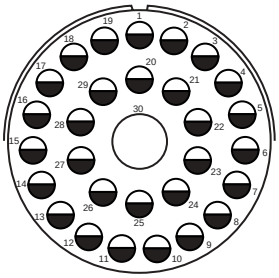

| | | | |
|---|---|---|---|
| **Insert Arrangement** | **40-9** | **40-10** | **40-30** |
| **Service Rating** | **A** | **A** | **A** |
| **Number of Contacts** | **1 22 24** | **4 9 16** | **29 1** |
| **Contact Size** | **8 12 16** | **4 8 16** | **12 4** |

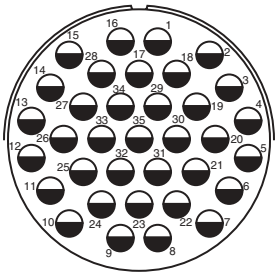

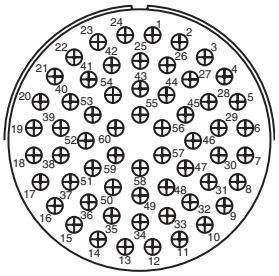

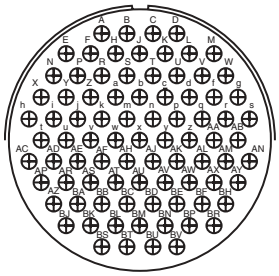

| | | | |
|---|---|---|---|
| **Insert Arrangement** | **40-35** | **40-53** | **40-56** |
| **Service Rating** | **D** | **A** | **A** |
| **Number of Contacts** | **35** | **60** | **85** |
| **Contact Size** | **12** | **16** | **16** |

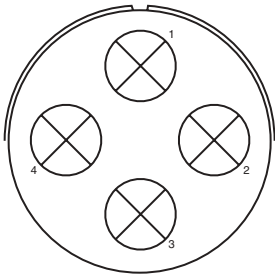

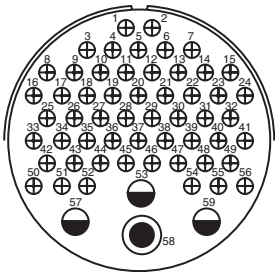

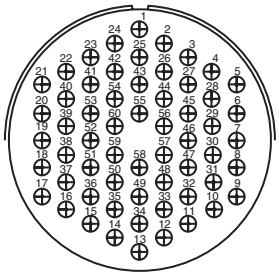

| | | | |
|---|---|---|---|
| **Insert Arrangement** | **40-57** | **40-61** | **40-62** |
| **Service Rating** | **E** | **A** | **A** |
| **Number of Contacts** | **4** | **1 3 55** | **60** |
| **Contact Size** | **0** | **8 12 16** | **16** |

**CONTACT LEGEND** **16 12 8 4 0**

# GT Series
## contact arrangements

**front face of pin insert or rear face of socket insert illustrated**

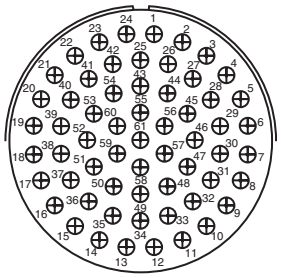

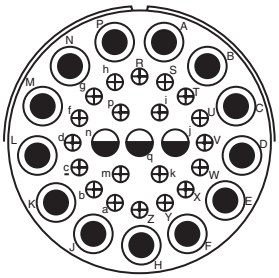

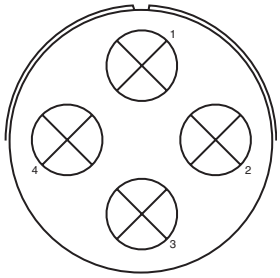

| | | | |
|---|---|---|---|
| **Insert Arrangement** | **40-63** | **40-64** | **40-66** |
| **Service Rating** | **A** | **–** | **–** |
| **Number of Contacts** | **61** | **3 20 13** | **4** |
| **Contact Size** | **16 for #14 wire** | **12 16 8 (Coax) RG-124/U** | **0 (Coax) RG-63 B/U** |

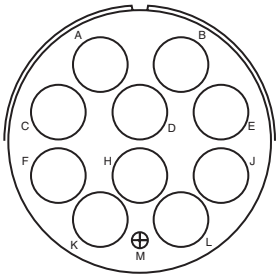

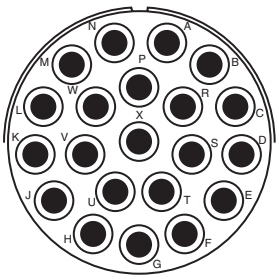

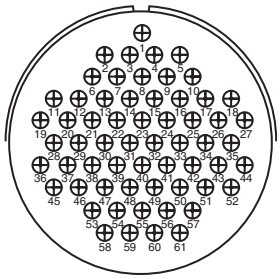

| | | | |
|---|---|---|---|
| **Insert Arrangement** | **40-67** | **40-68** | **40-70** |
| **Service Rating** | **A** | **A** | **A** |
| **Number of Contacts** | **1 10** | **21** | **61** |
| **Contact Size** | **16 4 (Coax) RG-59/U** | **8** | **16** |

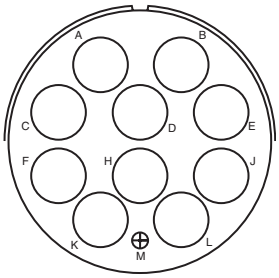

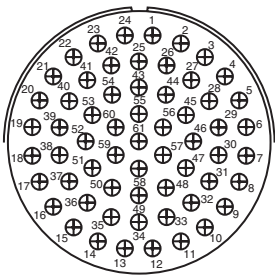

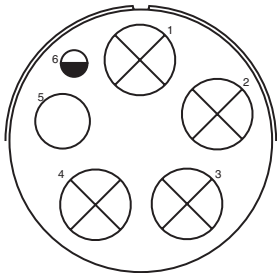

| | | | |
|---|---|---|---|
| **Insert Arrangement** | **40-72** | **40-73** | **40-74** |
| **Service Rating** | **A** | **A** | **A** |
| **Number of Contacts** | **1 10** | **61** | **1 1 4** |
| **Contact Size** | **16 4 (Coax) RG-9B/U** | **16** | **12 4 (Coax) RG-62/U 0 (Coax) RG-9B/U or RG-214/U** |

**CONTACT LEGEND** 16 12 8 4 0

# GT Series
## contact arrangements

**front face of pin insert or rear face of socket insert illustrated**

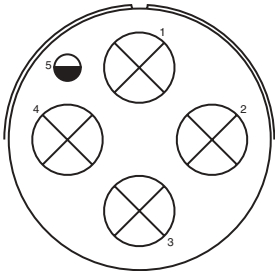


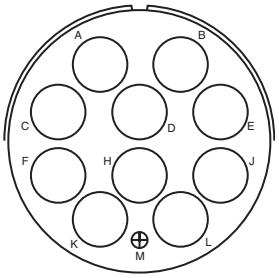


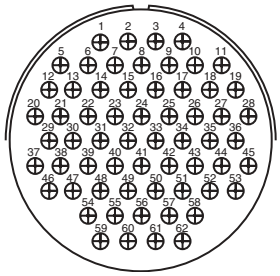

| | | | |
|---|---|---|---|
| **Insert Arrangement** | **40-75** | **40-80** | **40-81** |
| **Service Rating** | **E** | **A** | **A** |
| **Number of Contacts** | **4 1** | **10 1** | **62** |
| **Contact Size** | **0 12** | **4 16** | **16 for #14 wire** |

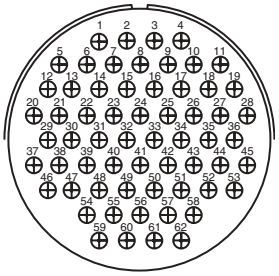

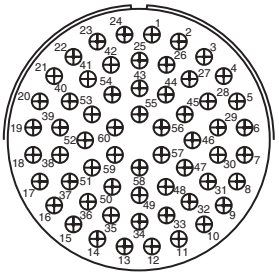

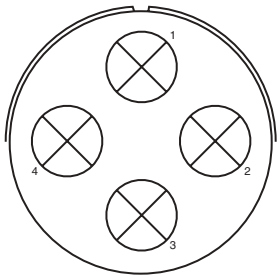


| | | | |
|---|---|---|---|
| **Insert Arrangement** | **40-82** | **40-85** | **40-86** |
| **Service Rating** | **A** | **A** | **–** |
| **Number of Contacts** | **62** | **60** | **4** |
| **Contact Size** | **16** | **16 for #14 wire** | **0 (Coax) RG-115A/U** |

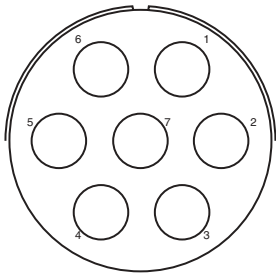


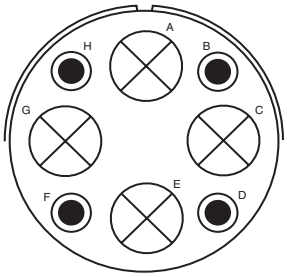


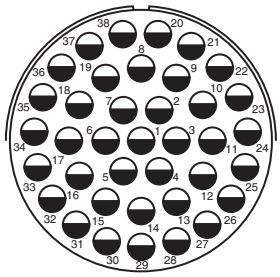

| | | | |
|---|---|---|---|
| **Insert Arrangement** | **40-87** | **40-AD** | **40-AG** |
| **Service Rating** | **D** | **A** | **A** |
| **Number of Contacts** | **7** | **4 4** | **38** |
| **Contact Size** | **4** | **0 8** | **12** |

**CONTACT LEGEND** **16** **12** **8** **4** **0**

# GT Series
## contact arrangements

**front face of pin insert or rear face of socket insert illustrated**

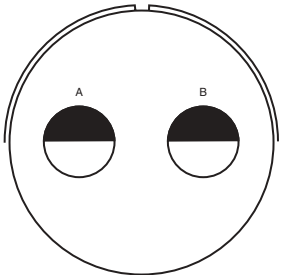


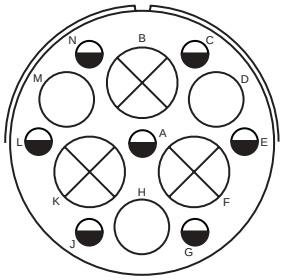


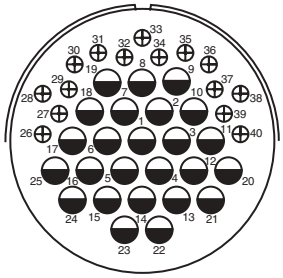

| | | | |
|---|---|---|---|
| **Insert Arrangement** | **40-AP** | **40-AR** | **40-AS** |
| **Service Rating** | **E** | **Inst.** | **A** |
| **Number of Contacts** | **2** | **3 3 7** | **25 15** |
| **Contact Size** | **4/0** | **0 4 12** | **12 16** |

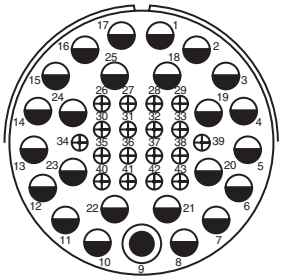

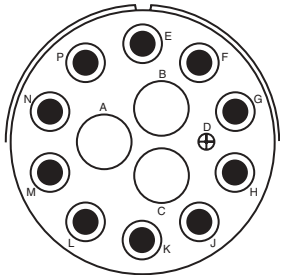


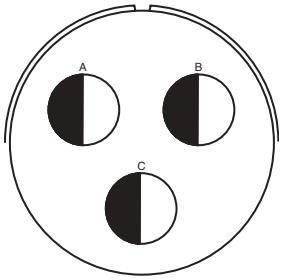


| | | | |
|---|---|---|---|
| **Insert Arrangement** | **40-AT** | **40-AU** | **40-AV** |
| **Service Rating** | **A** | **A** | **D** |
| **Number of Contacts** | **1 24 18** | **3 10 1** | **3** |
| **Contact Size** | **8 12 16** | **4 8 16** | **2/0** |

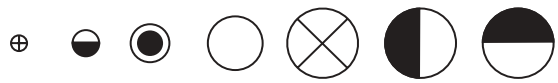

**CONTACT LEGEND** **16 12 8 4 0 2/0 4/0**

# GT Connector Classes

# GT00A
## wall mount receptacle for front panel mounting

- **Four through mounting holes or optional threaded holes**
- **Includes backshell for accessory attachment**
- **Without grommet and cable clamp**
- **Non-environment proof**

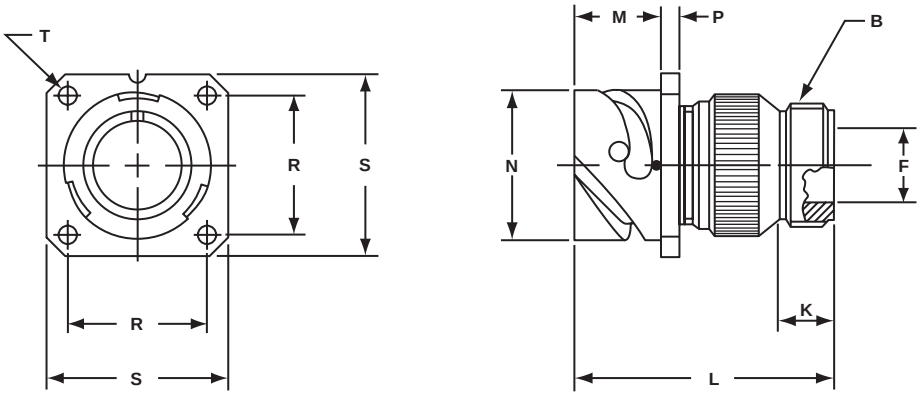


**Inches**

| Shell Size | B Thread Class 2A | F Min. | K Min. | L Max. | M + .016 – .000 | N + .000 – .006 | P ± .008 | R ± .004 | S ± .012 | T + .004 – .000 |
|---|---|---|---|---|---|---|---|---|---|---|
| 10SL | .6250-24 UNEF | .409 | .374 | 1.969 | .717 | .717 | .110 | .717 | 1.000 | .126 |
| 14S | .7500-20 UNEF | .520 | .374 | 1.969 | .717 | .969 | .126 | .906 | 1.181 | .126 |
| 16S | .8750-20 UNEF | .638 | .374 | 1.969 | .717 | 1.079 | .126 | .969 | 1.280 | .126 |
| 16 | .8750-20 UNEF | .638 | .374 | 2.362 | .846 | 1.079 | .126 | .969 | 1.280 | .126 |
| 18 | 1.0000-20 UNEF | .756 | .374 | 2.362 | .907 | 1.213 | .157 | 1.063 | 1.378 | .126 |
| 20 | 1.1875-18 UNEF | .867 | .374 | 2.362 | .907 | 1.346 | .157 | 1.157 | 1.496 | .126 |
| 22 | 1.1875-18 UNEF | .965 | .374 | 2.362 | .907 | 1.472 | .157 | 1.252 | 1.614 | .126 |
| 24 | 1.4375-18 UNEF | 1.094 | .374 | 2.560 | .907 | 1.610 | .157 | 1.374 | 1.752 | .146 |
| 28 | 1.4375-18 UNEF | 1.228 | .374 | 2.560 | .947 | 1.839 | .157 | 1.563 | 2.000 | .146 |
| 32 | 1.7500-18 UNS | 1.488 | .433 | 2.560 | .947 | 2.102 | .157 | 1.752 | 2.244 | .169 |
| 36 | 2.0000-18 UNS | 1.780 | .465 | 3.150 | .947 | 2.346 | .157 | 1.937 | 2.500 | .169 |
| 40 | 2.2500-16 UN | 2.016 | .465 | 3.150 | .947 | 2.579 | .157 | 2.185 | 2.752 | .169 |

**Millimeters**

| Shell Size | F Min. | K Min. | L Max. | M + 0.4 – 0.0 | N + 0.00 – 0.15 | P ± 0.2 | R ± 0.1 | S ± 0.3 | T + 0.1 – 0.0 |
|---|---|---|---|---|---|---|---|---|---|
| 10SL | 10.4 | 9.5 | 50 | 18.2 | 18.2 | 2.8 | 18.2 | 25.4 | 3.2 |
| 14S | 13.2 | 9.5 | 50 | 18.2 | 24.6 | 3.2 | 23.0 | 30.0 | 3.2 |
| 16S | 16.2 | 9.5 | 50 | 18.2 | 27.4 | 3.2 | 24.6 | 32.5 | 3.2 |
| 16 | 16.2 | 9.5 | 60 | 21.5 | 27.4 | 3.2 | 24.6 | 32.5 | 3.2 |
| 18 | 19.2 | 9.5 | 60 | 23.0 | 30.8 | 4.0 | 27.0 | 35.0 | 3.2 |
| 20 | 22.0 | 9.5 | 60 | 23.0 | 34.2 | 4.0 | 29.4 | 38.0 | 3.2 |
| 22 | 24.5 | 9.5 | 60 | 23.0 | 37.4 | 4.0 | 31.8 | 41.0 | 3.2 |
| 24 | 27.8 | 9.5 | 65 | 23.0 | 40.9 | 4.0 | 34.9 | 44.5 | 3.7 |
| 28 | 31.2 | 9.5 | 65 | 24.1 | 46.7 | 4.0 | 39.7 | 50.8 | 3.7 |
| 32 | 37.8 | 11.0 | 65 | 24.1 | 53.4 | 4.0 | 44.5 | 57.0 | 4.3 |
| 36 | 45.2 | 11.8 | 80 | 24.1 | 59.6 | 4.0 | 49.2 | 63.5 | 4.3 |
| 40 | 51.2 | 11.8 | 80 | 24.1 | 65.5 | 4.0 | 55.5 | 69.9 | 4.3 |

All dimensions for reference only.

# GT00AF/00F
## wall mount receptacle for front panel mounting

**GT00AF**
- **Without grommet**
- **Cable clamp included**
- **Non-environment proof**
- **Four through mounting holes or optional threaded holes**

**GT00F**
- **With wire sealing grommet and cable clamp**
- **For use with individual wires**
- **Environment proof**
- **Four through mounting holes or optional threaded holes**

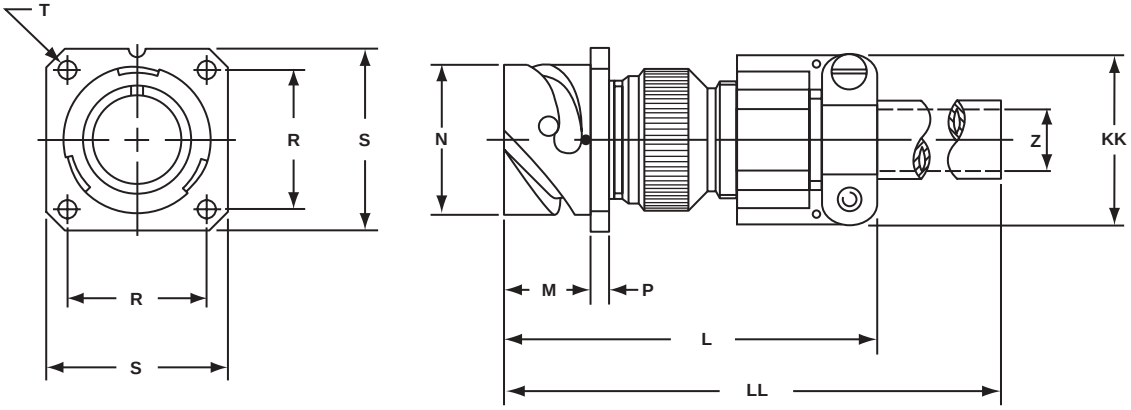


**Inches**

| Shell Size | L Max. | M + .016 – .000 | N + .000 – .006 | P ± .008 | R ± .004 | S ± .012 | T + .004 – .000 | Z Max. | KK Max. | LL Max. |
|---|---|---|---|---|---|---|---|---|---|---|
| 10SL | 2.362 | .717 | .717 | .110 | .717 | 1.000 | .126 | .220 | .894 | 4.720 |
| 14S | 2.440 | .717 | .969 | .126 | .906 | 1.181 | .126 | .312 | 1.083 | 4.720 |
| 16S | 2.756 | .717 | 1.079 | .126 | .969 | 1.280 | .126 | .437 | 1.181 | 4.720 |
| 16 | 2.756 | .846 | 1.079 | .126 | .969 | 1.280 | .126 | .437 | 1.181 | 4.921 |
| 18 | 3.031 | .907 | 1.213 | .157 | 1.063 | 1.378 | .126 | .562 | 1.300 | 4.921 |
| 20 | 3.031 | .907 | 1.346 | .157 | 1.157 | 1.496 | .126 | .625 | 1.476 | 4.921 |
| 22 | 3.031 | .907 | 1.472 | .157 | 1.252 | 1.614 | .126 | .625 | 1.476 | 4.921 |
| 24 | 3.346 | .907 | 1.610 | .157 | 1.374 | 1.752 | .146 | .750 | 1.705 | 4.921 |
| 28 | 3.346 | .947 | 1.839 | .157 | 1.563 | 2.000 | .146 | .750 | 1.705 | 4.921 |
| 32 | 3.346 | .947 | 2.102 | .157 | 1.752 | 2.244 | .169 | .937 | 2.035 | 4.921 |
| 36 | 4.134 | .947 | 2.346 | .157 | 1.937 | 2.500 | .169 | 1.250 | 2.283 | 5.315 |
| 40 | 5.118 | .947 | 2.579 | .157 | 2.185 | 2.752 | .169 | 1.375 | 2.579 | 5.709 |

**Millimeters**

| Shell Size | L Max. | M + 0.4 – 0.0 | N + 0.00 – 0.15 | P ± 0.2 | R ± 0.1 | S ± 0.3 | T + 0.1 – 0.0 | Z Max. | KK Max. | LL Max. |
|---|---|---|---|---|---|---|---|---|---|---|
| 10SL | 60 | 18.2 | 18.2 | 2.8 | 18.2 | 25.4 | 3.2 | 5.58 | 22.7 | 120 |
| 14S | 62 | 18.2 | 24.6 | 3.2 | 23.0 | 30.0 | 3.2 | 7.92 | 27.5 | 120 |
| 16S | 70 | 18.2 | 27.4 | 3.2 | 24.6 | 32.5 | 3.2 | 11.09 | 30.0 | 120 |
| 16 | 70 | 21.5 | 27.4 | 3.2 | 24.6 | 32.5 | 3.2 | 11.09 | 30.0 | 125 |
| 18 | 77 | 23.0 | 30.8 | 4.0 | 27.0 | 35.0 | 3.2 | 14.27 | 33.0 | 125 |
| 20 | 77 | 23.0 | 34.2 | 4.0 | 29.4 | 38.0 | 3.2 | 15.87 | 37.5 | 125 |
| 22 | 77 | 23.0 | 37.4 | 4.0 | 31.8 | 41.0 | 3.2 | 15.87 | 37.5 | 125 |
| 24 | 85 | 23.0 | 40.9 | 4.0 | 34.9 | 44.5 | 3.7 | 19.05 | 43.3 | 125 |
| 28 | 85 | 24.1 | 46.7 | 4.0 | 39.7 | 50.8 | 3.7 | 19.05 | 43.3 | 125 |
| 32 | 85 | 24.1 | 53.4 | 4.0 | 44.5 | 57.0 | 4.3 | 23.79 | 51.7 | 125 |
| 36 | 105 | 24.1 | 59.6 | 4.0 | 49.2 | 63.5 | 4.3 | 31.75 | 58.0 | 135 |
| 40 | 130 | 24.1 | 65.5 | 4.0 | 55.5 | 69.9 | 4.3 | 34.92 | 65.5 | 145 |

All dimensions for reference only.

# GT00CF/00CFZ
## wall mount receptacle for front panel mounting

**GT00CF**
- **Without individual wire sealing grommet**
- **Environment proof**
- **Four through mounting holes or optional threaded holes**
- **Includes clamp to grip and seal jacketed cable**

**GT00CFZ**
- **Same as GT00CF except: individual wire sealing grommet included for added moisture protection**
- **Environment proof**
- **Four through mounting holes or optional threaded holes**
- **Includes clamp to grip and seal jacketed cable**

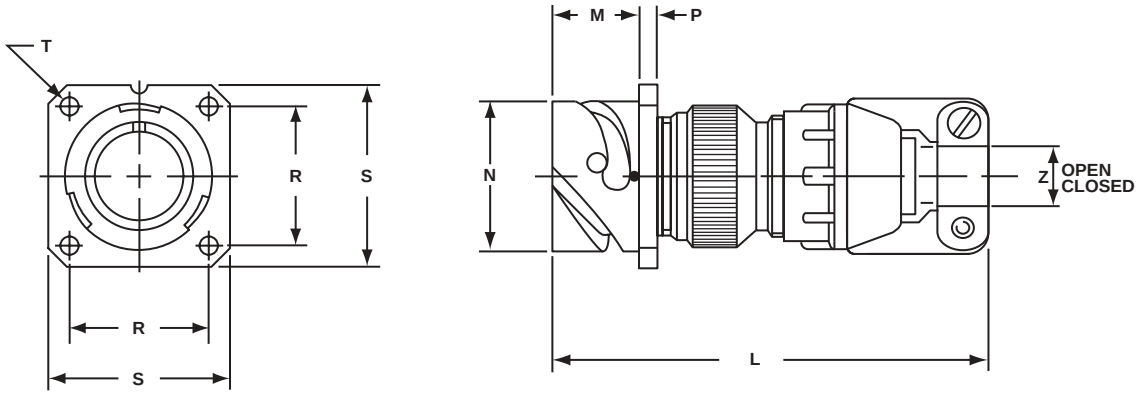


**Inches**

| Shell Size | L Approx. | M + .016 – .000 | N + .000 – .006 | P ± .008 | R ± .004 | S ± .012 | T + .004 – .000 | Z Open | Z Closed |
|---|---|---|---|---|---|---|---|---|---|
| 10SL | 2.740 | .717 | .717 | .110 | .717 | 1.000 | .126 | .312 | .094 |
| 14S | 2.898 | .717 | .969 | .126 | .906 | 1.181 | .126 | .438 | .230 |
| 16S | 2.898 | .717 | 1.079 | .126 | .969 | 1.280 | .126 | .531 | .315 |
| 16 | 3.217 | .846 | 1.079 | .126 | .969 | 1.280 | .126 | .531 | .315 |
| 18 | 3.307 | .907 | 1.213 | .157 | 1.063 | 1.378 | .126 | .625 | .378 |
| 20 | 3.311 | .907 | 1.346 | .157 | 1.157 | 1.496 | .126 | .748 | .445 |
| 22 | 3.350 | .907 | 1.472 | .157 | 1.252 | 1.614 | .126 | .748 | .445 |
| 24 | 3.484 | .907 | 1.610 | .157 | 1.374 | 1.752 | .146 | .937 | .610 |
| 28 | 3.736 | .947 | 1.839 | .157 | 1.563 | 2.000 | .146 | .937 | .610 |
| 32 | 4.142 | .947 | 2.102 | .157 | 1.752 | 2.244 | .169 | 1.250 | .921 |
| 36 | 4.390 | .947 | 2.346 | .157 | 1.937 | 2.500 | .169 | 1.378 | .921 |
| 40 | 4.988 | .947 | 2.579 | .157 | 2.185 | 2.752 | .169 | 1.624 | 1.177 |

**Millimeters**

| Shell Size | L Approx. | M + 0.4 – 0.0 | N + 0.00 – 0.15 | P ± 0.2 | R ± 0.1 | S ± 0.3 | T + 0.1 – 0.0 | Z Open | Z Closed |
|---|---|---|---|---|---|---|---|---|---|
| 10SL | 69.6 | 18.2 | 18.2 | 2.8 | 18.2 | 25.4 | 3.2 | 7.93 | 2.38 |
| 14S | 73.6 | 18.2 | 24.6 | 3.2 | 23.0 | 30.0 | 3.2 | 11.12 | 5.84 |
| 16S | 73.6 | 18.2 | 27.4 | 3.2 | 24.6 | 32.5 | 3.2 | 13.48 | 8.00 |
| 16 | 81.7 | 21.5 | 27.4 | 3.2 | 24.6 | 32.5 | 3.2 | 13.48 | 8.00 |
| 18 | 84.0 | 23.0 | 30.8 | 4.0 | 27.0 | 35.0 | 3.2 | 15.87 | 9.60 |
| 20 | 84.1 | 23.0 | 34.2 | 4.0 | 29.4 | 38.0 | 3.2 | 19.00 | 11.30 |
| 22 | 85.1 | 23.0 | 37.4 | 4.0 | 31.8 | 41.0 | 3.2 | 19.00 | 11.30 |
| 24 | 88.5 | 23.0 | 40.9 | 4.0 | 34.9 | 44.5 | 3.7 | 23.80 | 15.50 |
| 28 | 94.9 | 24.1 | 46.7 | 4.0 | 39.7 | 50.8 | 3.7 | 23.80 | 15.50 |
| 32 | 105.9 | 24.1 | 53.4 | 4.0 | 44.5 | 57.0 | 4.3 | 31.75 | 23.40 |
| 36 | 111.5 | 24.1 | 59.6 | 4.0 | 49.2 | 63.5 | 4.3 | 35.00 | 23.40 |
| 40 | 126.7 | 24.1 | 65.5 | 4.0 | 55.5 | 69.9 | 4.3 | 41.25 | 29.90 |

All dimensions for reference only.

# GT00G
## wall mount receptacle for front panel mounting

- **Four through mounting holes or optional threaded holes**
- **Includes backshell with individual wire sealing grommet**
- **For use with heat-shrink tubing**
- **Environment proof**

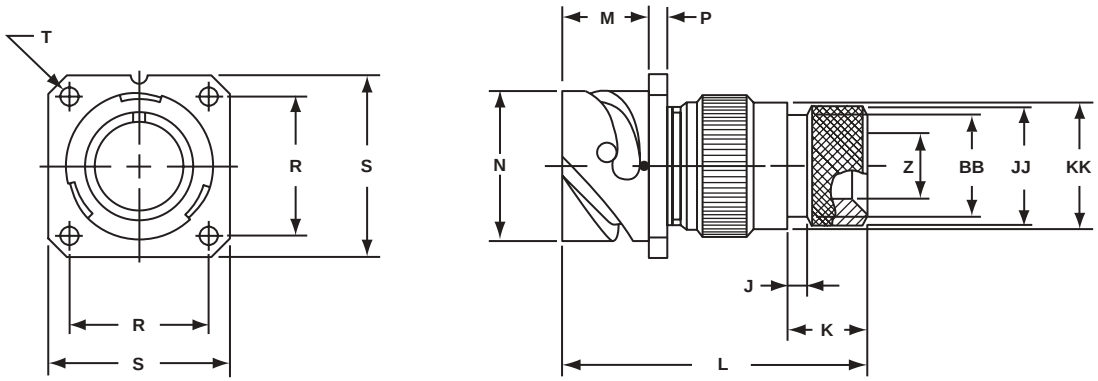


**Inches**

| Shell Size | J ± .008 | K ± .020 | L Max. | M + .016 − .000 | N + .000 − .006 | P ± .008 | R ± .004 | S ± .012 | T + .004 − .000 | Z Min. | BB Max. | JJ ± .008 | KK ± .008 |
|---|---|---|---|---|---|---|---|---|---|---|---|---|---|
| 10SL | .138 | .461 | 1.969 | .717 | .717 | .110 | .717 | 1.000 | .126 | .303 | .524 | .610 | .669 |
| 14S | .138 | .461 | 1.969 | .717 | .969 | .126 | .906 | 1.181 | .126 | .417 | .669 | .752 | .791 |
| 16S | .138 | .461 | 1.969 | .717 | 1.079 | .126 | .969 | 1.280 | .126 | .531 | .862 | .941 | .925 |
| 16 | .138 | .453 | 2.362 | .846 | 1.079 | .126 | .969 | 1.280 | .126 | .531 | .862 | .941 | .925 |
| 18 | .138 | .453 | 2.362 | .907 | 1.213 | .157 | 1.063 | 1.378 | .126 | .575 | .862 | .941 | 1.043 |
| 20 | .138 | .500 | 2.559 | .907 | 1.346 | .157 | 1.157 | 1.496 | .126 | .736 | 1.031 | 1.165 | 1.189 |
| 22 | .138 | .500 | 2.559 | .907 | 1.472 | .157 | 1.252 | 1.614 | .126 | .819 | 1.031 | 1.165 | 1.323 |
| 24 | .138 | .500 | 2.559 | .907 | 1.610 | .157 | 1.374 | 1.752 | .146 | .969 | 1.358 | 1.488 | 1.421 |
| 28 | .138 | .500 | 2.559 | .947 | 1.839 | .157 | 1.563 | 2.000 | .146 | 1.062 | 1.358 | 1.488 | 1.630 |
| 32 | .138 | .598 | 2.756 | .947 | 2.102 | .157 | 1.752 | 2.244 | .169 | 1.311 | 1.717 | 1.882 | 1.913 |
| 36 | .138 | .598 | 3.150 | .947 | 2.346 | .157 | 1.937 | 2.500 | .169 | 1.516 | 1.717 | 1.882 | 2.157 |
| 40 | .138 | .610 | 3.150 | .947 | 2.579 | .157 | 2.185 | 2.752 | .169 | 1.898 | 2.071 | 2.276 | 2.402 |

**Millimeters**

| Shell Size | J ± 0.2 | K ± 0.5 | L Max. | M + 0.4 − 0.0 | N + 0.00 − 0.15 | P ± 0.2 | R ± 0.1 | S ± 0.3 | T + 0.1 − 0.0 | Z Min. | BB Max. | JJ ± 0.2 | KK ± 0.2 |
|---|---|---|---|---|---|---|---|---|---|---|---|---|---|
| 10SL | 3.5 | 11.7 | 50 | 18.2 | 18.2 | 2.8 | 18.2 | 25.4 | 3.2 | 7.7 | 13.3 | 15.5 | 17.0 |
| 14S | 3.5 | 11.7 | 50 | 18.2 | 24.6 | 3.2 | 23.0 | 30.0 | 3.2 | 10.6 | 17.0 | 19.1 | 20.1 |
| 16S | 3.5 | 11.7 | 50 | 18.2 | 27.4 | 3.2 | 24.6 | 32.5 | 3.2 | 13.5 | 21.9 | 23.9 | 23.5 |
| 16 | 3.5 | 11.5 | 60 | 21.5 | 27.4 | 3.2 | 24.6 | 32.5 | 3.2 | 13.5 | 21.9 | 23.9 | 23.5 |
| 18 | 3.5 | 11.5 | 60 | 23.0 | 30.8 | 4.0 | 27.0 | 35.0 | 3.2 | 14.6 | 21.9 | 23.9 | 26.5 |
| 20 | 3.5 | 12.7 | 65 | 23.0 | 34.2 | 4.0 | 29.4 | 38.0 | 3.2 | 18.7 | 26.2 | 29.6 | 30.2 |
| 22 | 3.5 | 12.7 | 65 | 23.0 | 37.4 | 4.0 | 31.8 | 41.0 | 3.2 | 20.8 | 26.2 | 29.6 | 33.6 |
| 24 | 3.5 | 12.7 | 65 | 23.0 | 40.9 | 4.0 | 34.9 | 44.5 | 3.7 | 24.6 | 34.5 | 37.8 | 36.1 |
| 28 | 3.5 | 12.7 | 65 | 24.1 | 46.7 | 4.0 | 39.7 | 50.8 | 3.7 | 27.0 | 34.5 | 37.8 | 41.4 |
| 32 | 3.5 | 15.2 | 70 | 24.1 | 53.4 | 4.0 | 44.5 | 57.0 | 4.3 | 33.3 | 43.6 | 47.8 | 48.6 |
| 36 | 3.5 | 15.2 | 80 | 24.1 | 59.6 | 4.0 | 49.2 | 63.5 | 4.3 | 38.5 | 43.6 | 47.8 | 54.8 |
| 40 | 3.5 | 15.5 | 80 | 24.1 | 65.5 | 4.0 | 55.5 | 69.9 | 4.3 | 48.2 | 52.6 | 57.8 | 61.0 |

All dimensions for reference only.

# GT00LCF/00LCFZ

## wall mount receptacle for front panel mounting

**GT00LCF**

- **Includes a backshell with extended length to provide more working room for stripped jacketed cable**
- **Environment proof**
- **Four through mounting holes or optional threaded holes**
- **Includes clamp to grip and seal jacketed cable**

**GT00LCFZ**

- **Same as GT00LCF except: individual wire sealing grommet included for added moisture protection**
- **Environment proof**
- **Four through mounting holes or optional threaded holes**
- **Includes clamp to grip and seal jacketed cable**

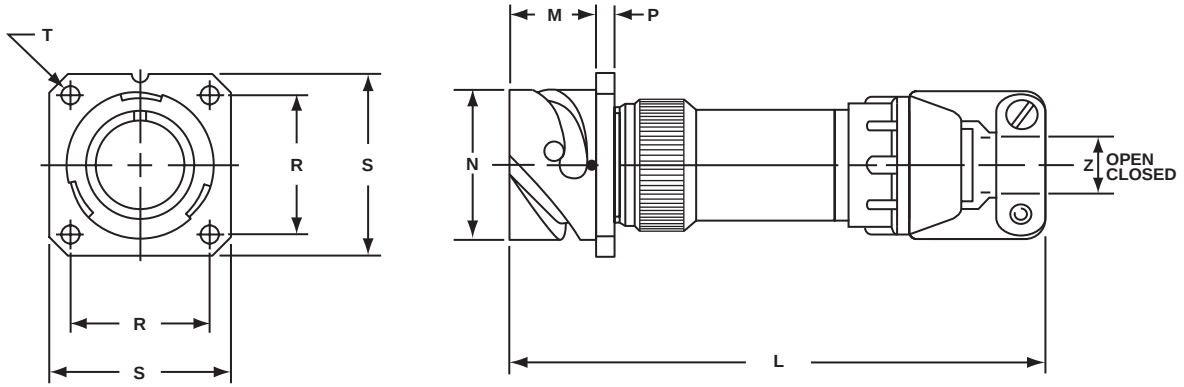


**Inches**

| Shell Size | L Approx. | M + .016 – .000 | N + .000 – .006 | P ± .008 | R ± .004 | S ± .012 | T + .004 – .000 | Z Open | Z Closed |
|---|---|---|---|---|---|---|---|---|---|
| 10SL | 3.811 | .717 | .717 | .110 | .717 | 1.000 | .126 | .312 | .094 |
| 14S | 3.843 | .717 | .969 | .126 | .906 | 1.181 | .126 | .438 | .230 |
| 16S | 3.843 | .717 | 1.079 | .126 | .969 | 1.280 | .126 | .531 | .315 |
| 16 | 4.217 | .846 | 1.079 | .126 | .969 | 1.280 | .126 | .531 | .315 |
| 18 | 4.409 | .907 | 1.213 | .157 | 1.063 | 1.378 | .126 | .625 | .378 |
| 20 | 4.409 | .907 | 1.346 | .157 | 1.157 | 1.496 | .126 | .748 | .445 |
| 22 | 4.413 | .907 | 1.472 | .157 | 1.252 | 1.614 | .126 | .748 | .445 |
| 24 | 4.535 | .907 | 1.610 | .157 | 1.374 | 1.752 | .146 | .937 | .610 |
| 28 | 4.744 | .947 | 1.839 | .157 | 1.563 | 2.000 | .146 | .937 | .610 |
| 32 | 5.079 | .947 | 2.102 | .157 | 1.752 | 2.244 | .169 | 1.250 | .921 |
| 36 | 5.327 | .947 | 2.346 | .157 | 1.937 | 2.500 | .169 | 1.378 | .921 |
| 40 | 5.327 | .947 | 2.579 | .157 | 2.185 | 2.752 | .169 | 1.624 | 1.177 |

**Millimeters**

| Shell Size | L Approx. | M + 0.4 – 0.0 | N + 0.00 – 0.15 | P ± 0.2 | R ± 0.1 | S ± 0.3 | T + 0.1 – 0.0 | Z Open | Z Closed |
|---|---|---|---|---|---|---|---|---|---|
| 10SL | 96.8 | 18.2 | 18.2 | 2.8 | 18.2 | 25.4 | 3.2 | 7.93 | 2.38 |
| 14S | 97.6 | 18.2 | 24.6 | 3.2 | 23.0 | 30.0 | 3.2 | 11.12 | 5.84 |
| 16S | 97.6 | 18.2 | 27.4 | 3.2 | 24.6 | 32.5 | 3.2 | 13.48 | 8.00 |
| 16 | 107.1 | 21.5 | 27.4 | 3.2 | 24.6 | 32.5 | 3.2 | 13.48 | 8.00 |
| 18 | 112.0 | 23.0 | 30.8 | 4.0 | 27.0 | 35.0 | 3.2 | 15.87 | 9.60 |
| 20 | 112.0 | 23.0 | 34.2 | 4.0 | 29.4 | 38.0 | 3.2 | 19.00 | 11.30 |
| 22 | 112.1 | 23.0 | 37.4 | 4.0 | 31.8 | 41.0 | 3.2 | 19.00 | 11.30 |
| 24 | 115.2 | 23.0 | 40.9 | 4.0 | 34.9 | 44.5 | 3.7 | 23.80 | 15.50 |
| 28 | 120.5 | 24.1 | 46.7 | 4.0 | 39.7 | 50.8 | 3.7 | 23.80 | 15.50 |
| 32 | 129.0 | 24.1 | 53.4 | 4.0 | 44.5 | 57.0 | 4.3 | 31.75 | 23.40 |
| 36 | 135.3 | 24.1 | 59.6 | 4.0 | 49.2 | 63.5 | 4.3 | 35.00 | 23.40 |
| 40 | 135.3 | 24.1 | 65.5 | 4.0 | 55.5 | 69.9 | 4.3 | 41.25 | 29.90 |

All dimensions for reference only.

# GT00R
## wall mount receptacle for front panel mounting

- **Four through mounting holes or optional threaded holes**
- **With individual wire sealing grommet**
- **Includes backshell for conduit termination**
- **Environment proof**

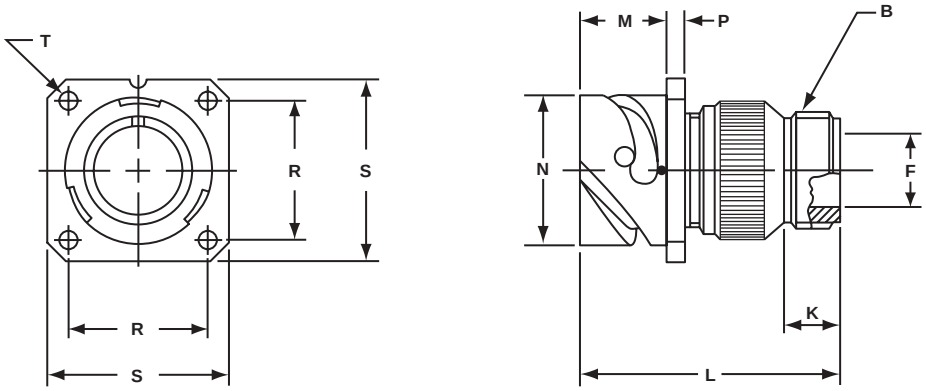


**Inches**

| Shell Size | B Thread Class 2A | F Min. | K Min. | L Max. | M + .016 – .000 | N + .000 – .006 | P ± .008 | R ± .004 | S ± .012 | T + .004 – .000 |
|---|---|---|---|---|---|---|---|---|---|---|
| 10SL | .6250-24 UNEF | .409 | .374 | 1.969 | .717 | .717 | .110 | .717 | 1.000 | .126 |
| 14S | .7500-20 UNEF | .520 | .374 | 1.969 | .717 | .969 | .126 | .906 | 1.181 | .126 |
| 16S | .8750-20 UNEF | .638 | .374 | 1.969 | .717 | 1.079 | .126 | .969 | 1.280 | .126 |
| 16 | .8750-20 UNEF | .638 | .374 | 2.362 | .846 | 1.079 | .126 | .969 | 1.280 | .126 |
| 18 | 1.0000-20 UNEF | .756 | .374 | 2.362 | .907 | 1.213 | .157 | 1.063 | 1.378 | .126 |
| 20 | 1.1875-18 UNEF | .866 | .374 | 2.362 | .907 | 1.346 | .157 | 1.157 | 1.496 | .126 |
| 22 | 1.1875-18 UNEF | .965 | .374 | 2.362 | .907 | 1.472 | .157 | 1.252 | 1.614 | .126 |
| 24 | 1.4375-18 UNEF | 1.094 | .374 | 2.560 | .907 | 1.610 | .157 | 1.374 | 1.752 | .146 |
| 28 | 1.4375-18 UNEF | 1.228 | .374 | 2.560 | .947 | 1.839 | .157 | 1.563 | 2.000 | .146 |
| 32 | 1.7500-18 UNS | 1.488 | .433 | 2.560 | .947 | 2.102 | .157 | 1.752 | 2.244 | .169 |
| 36 | 2.0000-18 UNS | 1.780 | .465 | 3.150 | .947 | 2.346 | .157 | 1.937 | 2.500 | .169 |
| 40 | 2.2500-16 UN | 2.016 | .465 | 3.150 | .947 | 2.579 | .157 | 2.185 | 2.752 | .169 |

**Millimeters**

| Shell Size | F Min. | K Min. | L Max. | M + 0.4 – 0.0 | N + 0.00 – 0.15 | P ± 0.2 | R ± 0.1 | S ± 0.3 | T + 0.1 – 0.0 |
|---|---|---|---|---|---|---|---|---|---|
| 10SL | 10.4 | 9.5 | 50 | 18.2 | 18.2 | 2.8 | 18.2 | 25.4 | 3.2 |
| 14S | 13.2 | 9.5 | 50 | 18.2 | 24.6 | 3.2 | 23.0 | 30.0 | 3.2 |
| 16S | 16.2 | 9.5 | 50 | 18.2 | 27.4 | 3.2 | 24.6 | 32.5 | 3.2 |
| 16 | 16.2 | 9.5 | 60 | 21.5 | 27.4 | 3.2 | 24.6 | 32.5 | 3.2 |
| 18 | 19.2 | 9.5 | 60 | 23.0 | 30.8 | 4.0 | 27.0 | 35.0 | 3.2 |
| 20 | 22.0 | 9.5 | 60 | 23.0 | 34.2 | 4.0 | 29.4 | 38.0 | 3.2 |
| 22 | 24.5 | 9.5 | 60 | 23.0 | 37.4 | 4.0 | 31.8 | 41.0 | 3.2 |
| 24 | 27.8 | 9.5 | 65 | 23.0 | 40.9 | 4.0 | 34.9 | 44.5 | 3.7 |
| 28 | 31.2 | 9.5 | 65 | 24.1 | 46.7 | 4.0 | 39.7 | 50.8 | 3.7 |
| 32 | 37.8 | 11.0 | 65 | 24.1 | 53.4 | 4.0 | 44.5 | 57.0 | 4.3 |
| 36 | 45.2 | 11.8 | 80 | 24.1 | 59.6 | 4.0 | 49.2 | 63.5 | 4.3 |
| 40 | 51.2 | 11.8 | 80 | 24.1 | 65.5 | 4.0 | 55.5 | 69.9 | 4.3 |

All dimensions for reference only.

# GT00RV

## wall mount receptacle for front panel mounting

- **Four through mounting holes or optional threaded holes**
- **Includes wire sealing grommet**
- **For use with individual wires**
- **Environment proof**

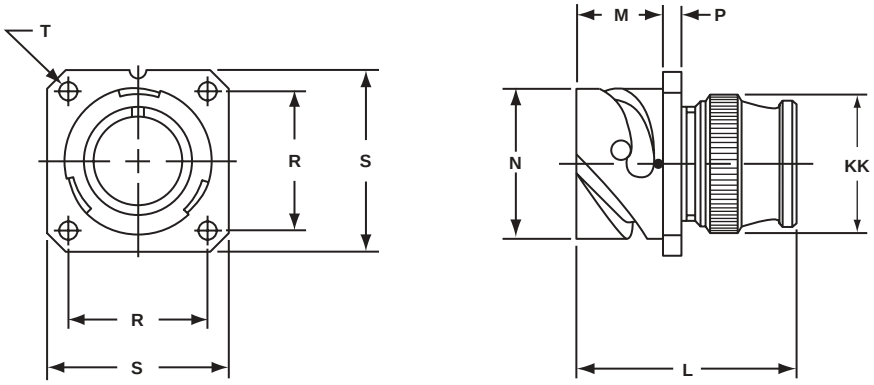


**Inches**

| Shell Size | L Max. | M + .016 – .000 | N + .000 – .006 | P ± .008 | R ± .004 | S ± .012 | T + .004 – .000 | KK Max. |
|---|---|---|---|---|---|---|---|---|
| 10SL | 1.890 | .717 | .717 | .110 | .717 | 1.000 | .126 | .787 |
| 14S | 1.890 | .717 | .969 | .126 | .906 | 1.181 | .126 | .945 |
| 16S | 1.890 | .717 | 1.079 | .126 | .969 | 1.280 | .126 | 1.024 |
| 16 | 2.205 | .846 | 1.079 | .126 | .969 | 1.280 | .126 | 1.024 |
| 18 | 2.244 | .907 | 1.213 | .157 | 1.063 | 1.378 | .126 | 1.161 |
| 20 | 2.244 | .907 | 1.346 | .157 | 1.157 | 1.496 | .126 | 1.299 |
| 22 | 2.244 | .907 | 1.472 | .157 | 1.252 | 1.614 | .126 | 1.417 |
| 24 | 2.244 | .907 | 1.610 | .157 | 1.374 | 1.752 | .146 | 1.575 |
| 28 | 2.244 | .947 | 1.839 | .157 | 1.563 | 2.000 | .146 | 1.811 |
| 32 | 2.362 | .947 | 2.102 | .157 | 1.752 | 2.244 | .169 | 2.028 |
| 36 | 2.362 | .947 | 2.346 | .157 | 1.937 | 2.500 | .169 | 2.283 |
| 40 | 2.362 | .947 | 2.579 | .157 | 2.185 | 2.752 | .169 | 2.539 |

**Millimeters**

| Shell Size | L Max. | M + 0.4 – 0.0 | N + 0.00 – 0.15 | P ± 0.2 | R ± 0.1 | S ± 0.3 | T + 0.1 – 0.0 | KK Max. |
|---|---|---|---|---|---|---|---|---|
| 10SL | 48.0 | 18.2 | 18.2 | 2.8 | 18.2 | 25.4 | 3.2 | 20.0 |
| 14S | 48.0 | 18.2 | 24.6 | 3.2 | 23.0 | 30.0 | 3.2 | 24.0 |
| 16S | 48.0 | 18.2 | 27.4 | 3.2 | 24.6 | 32.5 | 3.2 | 26.0 |
| 16 | 56.0 | 21.5 | 27.4 | 3.2 | 24.6 | 32.5 | 3.2 | 26.0 |
| 18 | 57.0 | 23.0 | 30.8 | 4.0 | 27.0 | 35.0 | 3.2 | 29.5 |
| 20 | 57.0 | 23.0 | 34.2 | 4.0 | 29.4 | 38.0 | 3.2 | 33.0 |
| 22 | 57.0 | 23.0 | 37.4 | 4.0 | 31.8 | 41.0 | 3.2 | 36.0 |
| 24 | 57.0 | 23.0 | 40.9 | 4.0 | 34.9 | 44.5 | 3.7 | 40.0 |
| 28 | 57.0 | 24.1 | 46.7 | 4.0 | 39.7 | 50.8 | 3.7 | 46.0 |
| 32 | 60.0 | 24.1 | 53.4 | 4.0 | 44.5 | 57.0 | 4.3 | 51.5 |
| 36 | 60.0 | 24.1 | 59.6 | 4.0 | 49.2 | 63.5 | 4.3 | 58.0 |
| 40 | 60.0 | 24.1 | 65.5 | 4.0 | 55.5 | 69.9 | 4.3 | 64.5 |

All dimensions for reference only.

# GT01A
## inline receptacle

- **Includes backshell for accessory attachment**
- **Without wire sealing grommet and cable clamp**
- **Non-environment proof**

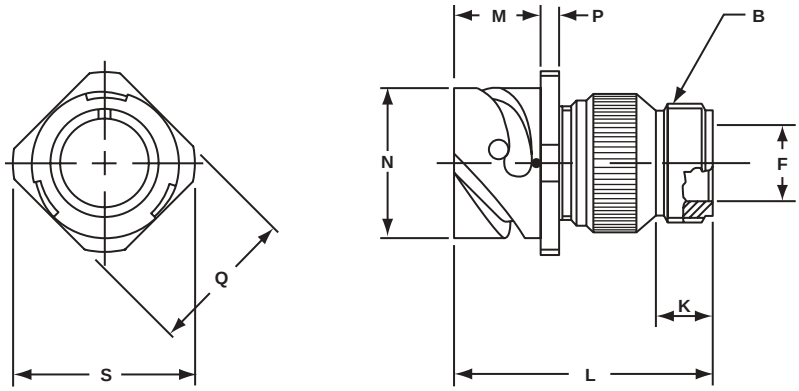


**Inches**

| Shell Size | B Thread Class 2A | F Min. | K Min. | L Max. | M + .016 – .000 | N + .000 – .006 | P ± .008 | Q ± .008 | S Max. |
|---|---|---|---|---|---|---|---|---|---|
| 10SL | .6250-24 UNEF | .409 | .374 | 1.969 | .717 | .717 | .110 | .811 | .992 |
| 14S | .7500-20 UNEF | .520 | .374 | 1.969 | .717 | .969 | .126 | 1.000 | 1.173 |
| 16S | .8750-20 UNEF | .638 | .374 | 1.969 | .717 | 1.079 | .126 | 1.126 | 1.272 |
| 16 | .8750-20 UNEF | .638 | .374 | 2.362 | .846 | 1.079 | .126 | 1.126 | 1.272 |
| 18 | 1.0000-20 UNEF | .756 | .374 | 2.362 | .907 | 1.213 | .157 | 1.248 | 1.370 |
| 20 | 1.1875-18 UNEF | .867 | .374 | 2.362 | .907 | 1.346 | .157 | 1.374 | 1.488 |
| 22 | 1.1875-18 UNEF | .965 | .374 | 2.362 | .907 | 1.472 | .157 | 1.500 | 1.618 |
| 24 | 1.4375-18 UNEF | 1.094 | .374 | 2.560 | .907 | 1.610 | .157 | 1.626 | 1.756 |
| 28 | 1.4375-18 UNEF | 1.228 | .374 | 2.560 | .947 | 1.839 | .157 | 1.874 | 2.004 |
| 32 | 1.7500-18 UNS | 1.488 | .433 | 2.560 | .947 | 2.102 | .157 | 2.126 | 2.248 |
| 36 | 2.0000-18 UNS | 1.780 | .465 | 3.150 | .947 | 2.346 | .157 | 2.386 | 2.504 |
| 40 | 2.2500-16 UN | 2.016 | .465 | 3.150 | .947 | 2.579 | .157 | 2.618 | 2.756 |

**Millimeters**

| Shell Size | F Min. | K Min. | L Max. | M + 0.4 – 0.0 | N + 0.00 – 0.15 | P ± 0.2 | Q ± 0.2 | S Max. |
|---|---|---|---|---|---|---|---|---|
| 10SL | 10.4 | 9.5 | 50 | 18.2 | 18.2 | 2.8 | 20.6 | 25.2 |
| 14S | 13.2 | 9.5 | 50 | 18.2 | 24.6 | 3.2 | 25.4 | 29.8 |
| 16S | 16.2 | 9.5 | 50 | 18.2 | 27.4 | 3.2 | 28.6 | 32.3 |
| 16 | 16.2 | 9.5 | 60 | 21.5 | 27.4 | 3.2 | 28.6 | 32.3 |
| 18 | 19.2 | 9.5 | 60 | 23.0 | 30.8 | 4.0 | 31.7 | 34.8 |
| 20 | 22.0 | 9.5 | 60 | 23.0 | 34.2 | 4.0 | 34.9 | 37.8 |
| 22 | 24.5 | 9.5 | 60 | 23.0 | 37.4 | 4.0 | 38.1 | 41.1 |
| 24 | 27.8 | 9.5 | 65 | 23.0 | 40.9 | 4.0 | 41.3 | 44.6 |
| 28 | 31.2 | 9.5 | 65 | 24.1 | 46.7 | 4.0 | 47.6 | 50.9 |
| 32 | 37.8 | 11.0 | 65 | 24.1 | 53.4 | 4.0 | 54.0 | 57.1 |
| 36 | 45.2 | 11.8 | 80 | 24.1 | 59.6 | 4.0 | 60.6 | 63.6 |
| 40 | 51.2 | 11.8 | 80 | 24.1 | 65.5 | 4.0 | 66.5 | 70.0 |

All dimensions for reference only.

# GT01AF/01F
## inline receptacle

**GT01AF**
- **With cable clamp**
- **Wire sealing grommet not included**
- **Non-environment proof**

**GT01F**
- **With wire sealing grommet and cable clamp**
- **For use with individual wires**
- **Environment proof**

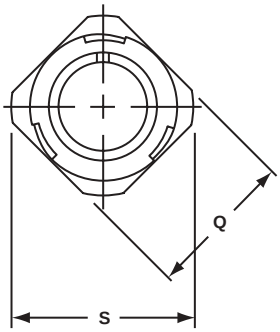


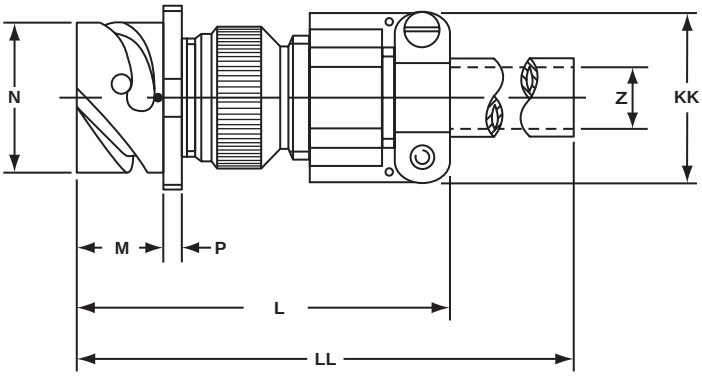


**Inches**

| Shell Size | L Max. | M + .016 – .000 | N + .000 – .006 | P ± .008 | Q ± .008 | S Max. | Z Nominal | KK Max. | LL Max. |
|---|---|---|---|---|---|---|---|---|---|
| 10SL | 2.362 | .717 | .717 | .110 | .811 | .992 | .220 | .894 | 4.720 |
| 14S | 2.440 | .717 | .969 | .126 | 1.000 | 1.173 | .312 | 1.083 | 4.720 |
| 16S | 2.756 | .717 | 1.079 | .126 | 1.126 | 1.272 | .437 | 1.181 | 4.720 |
| 16 | 2.756 | .846 | 1.079 | .126 | 1.126 | 1.272 | .437 | 1.181 | 4.921 |
| 18 | 3.031 | .907 | 1.213 | .157 | 1.248 | 1.370 | .562 | 1.300 | 4.921 |
| 20 | 3.031 | .907 | 1.346 | .157 | 1.374 | 1.488 | .625 | 1.476 | 4.921 |
| 22 | 3.031 | .907 | 1.472 | .157 | 1.500 | 1.618 | .625 | 1.476 | 4.921 |
| 24 | 3.346 | .907 | 1.610 | .157 | 1.626 | 1.756 | .750 | 1.705 | 4.921 |
| 28 | 3.346 | .947 | 1.839 | .157 | 1.874 | 2.004 | .750 | 1.705 | 4.921 |
| 32 | 3.346 | .947 | 2.102 | .157 | 2.126 | 2.248 | .937 | 2.035 | 4.921 |
| 36 | 4.134 | .947 | 2.346 | .157 | 2.386 | 2.504 | 1.250 | 2.283 | 5.315 |
| 40 | 5.118 | .947 | 2.579 | .157 | 2.618 | 2.756 | 1.375 | 2.579 | 5.709 |

**Millimeters**

| Shell Size | L Max. | M + 0.4 – 0.0 | N + 0.00 – 0.15 | P ± 0.2 | Q ± 0.2 | S Max. | Z Nominal | KK Max. | LL Max. |
|---|---|---|---|---|---|---|---|---|---|
| 10SL | 60 | 18.2 | 18.2 | 2.8 | 20.6 | 25.2 | 5.58 | 22.7 | 120 |
| 14S | 62 | 18.2 | 24.6 | 3.2 | 25.4 | 29.8 | 7.92 | 27.5 | 120 |
| 16S | 70 | 18.2 | 27.4 | 3.2 | 28.6 | 32.3 | 11.09 | 30.0 | 120 |
| 16 | 70 | 21.5 | 27.4 | 3.2 | 28.6 | 32.3 | 11.09 | 30.0 | 125 |
| 18 | 77 | 23.0 | 30.8 | 4.0 | 31.7 | 34.8 | 14.27 | 33.0 | 125 |
| 20 | 77 | 23.0 | 34.2 | 4.0 | 34.9 | 37.8 | 15.87 | 37.5 | 125 |
| 22 | 77 | 23.0 | 37.4 | 4.0 | 38.1 | 41.1 | 15.87 | 37.5 | 125 |
| 24 | 85 | 23.0 | 40.9 | 4.0 | 41.3 | 44.6 | 19.05 | 43.3 | 125 |
| 28 | 85 | 24.1 | 46.7 | 4.0 | 47.6 | 50.9 | 19.05 | 43.3 | 125 |
| 32 | 85 | 24.1 | 53.4 | 4.0 | 54.0 | 57.1 | 23.79 | 51.7 | 125 |
| 36 | 105 | 24.1 | 59.6 | 4.0 | 60.6 | 63.6 | 31.75 | 58.0 | 135 |
| 40 | 130 | 24.1 | 65.5 | 4.0 | 66.5 | 70.0 | 34.92 | 65.5 | 145 |

All dimensions for reference only.

# GT01G
## inline receptacle

- **Includes wire sealing grommet**
- **For use with heat-shrink tubing**
- **Environment proof**

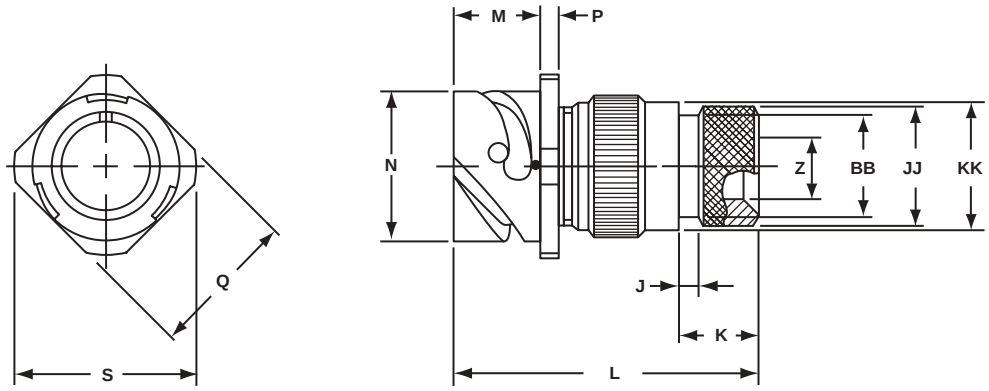


**Inches**

| Shell Size | J ± .008 | K ± .020 | L Max. | M + .016 – .000 | N + .000 – .006 | P ± .008 | Q ± .008 | S Max. | Z Min. | BB Max. | JJ ± .008 | KK ± .008 |
|---|---|---|---|---|---|---|---|---|---|---|---|---|
| 10SL | .138 | .461 | 1.969 | .717 | .717 | .110 | .811 | .992 | .303 | .524 | .610 | .669 |
| 14S | .138 | .461 | 1.969 | .717 | .969 | .126 | 1.000 | 1.173 | .417 | .669 | .752 | .791 |
| 16S | .138 | .461 | 1.969 | .717 | 1.079 | .126 | 1.126 | 1.272 | .531 | .862 | .941 | .925 |
| 16 | .138 | .453 | 2.362 | .846 | 1.079 | .126 | 1.126 | 1.272 | .531 | .862 | .941 | .925 |
| 18 | .138 | .453 | 2.362 | .907 | 1.213 | .157 | 1.248 | 1.370 | .575 | .862 | .941 | 1.043 |
| 20 | .138 | .500 | 2.559 | .907 | 1.346 | .157 | 1.374 | 1.488 | .736 | 1.031 | 1.165 | 1.189 |
| 22 | .138 | .500 | 2.559 | .907 | 1.472 | .157 | 1.500 | 1.618 | .819 | 1.031 | 1.165 | 1.323 |
| 24 | .138 | .500 | 2.559 | .907 | 1.610 | .157 | 1.626 | 1.756 | .969 | 1.358 | 1.488 | 1.421 |
| 28 | .138 | .500 | 2.559 | .947 | 1.839 | .157 | 1.874 | 2.004 | 1.063 | 1.358 | 1.488 | 1.630 |
| 32 | .138 | .598 | 2.756 | .947 | 2.102 | .157 | 2.126 | 2.248 | 1.311 | 1.717 | 1.882 | 1.913 |
| 36 | .138 | .598 | 3.150 | .947 | 2.346 | .157 | 2.386 | 2.504 | 1.516 | 1.717 | 1.882 | 2.157 |
| 40 | .138 | .610 | 3.150 | .947 | 2.579 | 1.57 | 2.618 | 2.756 | 1.898 | 2.071 | 2.276 | 2.402 |

**Millimeters**

| Shell Size | J ± 0.2 | K ± 0.5 | L Max. | M + 0.4 – 0.0 | N + 0.00 – 0.15 | P ± 0.2 | Q ± 0.2 | S Max. | Z Min. | B Max. | JJ ± 0.2 | KK ± 0.2 |
|---|---|---|---|---|---|---|---|---|---|---|---|---|
| 10SL | 3.5 | 11.7 | 50 | 18.2 | 18.2 | 2.8 | 20.6 | 25.2 | 7.7 | 13.3 | 15.5 | 17.0 |
| 14S | 3.5 | 11.7 | 50 | 18.2 | 24.6 | 3.2 | 25.4 | 29.8 | 10.6 | 17.0 | 19.1 | 20.1 |
| 16S | 3.5 | 11.7 | 50 | 18.2 | 27.4 | 3.2 | 28.6 | 32.3 | 13.5 | 21.9 | 23.9 | 23.5 |
| 16 | 3.5 | 11.5 | 60 | 21.5 | 27.4 | 3.2 | 28.6 | 32.3 | 13.5 | 21.9 | 23.9 | 23.5 |
| 18 | 3.5 | 11.5 | 60 | 23.0 | 30.8 | 4.0 | 31.7 | 34.8 | 14.6 | 21.9 | 23.9 | 26.5 |
| 20 | 3.5 | 12.7 | 65 | 23.0 | 34.2 | 4.0 | 34.9 | 37.8 | 18.7 | 26.2 | 29.6 | 30.2 |
| 22 | 3.5 | 12.7 | 65 | 23.0 | 37.4 | 4.0 | 38.1 | 41.1 | 20.8 | 26.2 | 29.6 | 33.6 |
| 24 | 3.5 | 12.7 | 65 | 23.0 | 40.9 | 4.0 | 41.3 | 44.6 | 24.6 | 34.5 | 37.8 | 36.1 |
| 28 | 3.5 | 12.7 | 65 | 24.1 | 46.7 | 4.0 | 47.6 | 50.9 | 27.0 | 34.5 | 37.8 | 41.4 |
| 32 | 3.5 | 15.2 | 70 | 24.1 | 53.4 | 4.0 | 54.0 | 57.1 | 33.3 | 43.6 | 47.8 | 48.6 |
| 36 | 3.5 | 15.2 | 80 | 24.1 | 59.6 | 4.0 | 60.6 | 63.6 | 38.5 | 43.6 | 47.8 | 54.8 |
| 40 | 3.5 | 15.5 | 80 | 24.1 | 65.5 | 4.0 | 66.5 | 70.0 | 48.2 | 52.6 | 57.8 | 61.0 |

All dimensions for reference only.

# GT01LCF/01LCFZ
## inline receptacle

**GT01LCF**
- **Long backshell provides more working room for stripped jacketed cable**
- **Includes cable clamp to grip and seal jacketed cable**
- **Environment proof**

**GT01LCFZ**
- **Same as GT01LCF except: individual wire sealing grommet included for added moisture protection**
- **Environment proof**

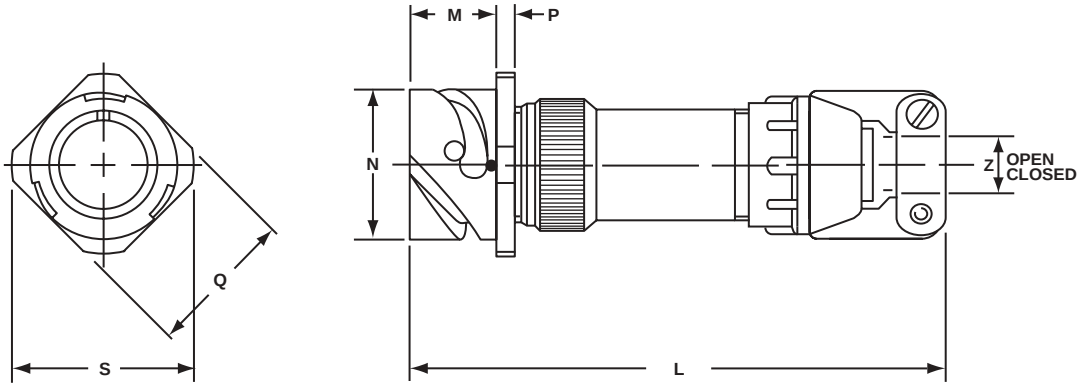


**Inches**

| Shell Size | L Approx. | M + .016 – .000 | N + .000 – .006 | P ± .008 | Q ± .008 | S Max. | Z Open | Z Closed |
|---|---|---|---|---|---|---|---|---|
| 10SL | 3.811 | .717 | .717 | .110 | .811 | .992 | .312 | .094 |
| 14S | 3.843 | .717 | .969 | .126 | 1.000 | 1.173 | .438 | .230 |
| 16S | 3.843 | .717 | 1.079 | .126 | 1.126 | 1.272 | .531 | .315 |
| 16 | 4.217 | .846 | 1.079 | .126 | 1.126 | 1.272 | .531 | .315 |
| 18 | 4.409 | .907 | 1.213 | .157 | 1.248 | 1.370 | .625 | .378 |
| 20 | 4.409 | .907 | 1.346 | .157 | 1.374 | 1.488 | .748 | .445 |
| 22 | 4.413 | .907 | 1.472 | .157 | 1.500 | 1.618 | .748 | .445 |
| 24 | 4.535 | .907 | 1.610 | .157 | 1.626 | 1.756 | .937 | .610 |
| 28 | 4.744 | .947 | 1.839 | .157 | 1.874 | 2.004 | .937 | .610 |
| 32 | 5.079 | .947 | 2.102 | .157 | 2.126 | 2.248 | 1.250 | .921 |
| 36 | 5.327 | .947 | 2.346 | .157 | 2.386 | 2.504 | 1.378 | .921 |
| 40 | 5.327 | .947 | 2.579 | .157 | 2.618 | 2.756 | 1.624 | 1.177 |

**Millimeters**

| Shell Size | L Approx. | M + 0.4 – 0.0 | N + 0.00 – 0.15 | P ± 0.2 | Q ± 0.2 | S Max. | Z Open | Z Closed |
|---|---|---|---|---|---|---|---|---|
| 10SL | 96.8 | 18.2 | 18.2 | 2.8 | 20.6 | 25.2 | 7.93 | 2.38 |
| 14S | 97.6 | 18.2 | 24.6 | 3.2 | 25.4 | 29.8 | 11.12 | 5.84 |
| 16S | 97.6 | 18.2 | 27.4 | 3.2 | 28.6 | 32.3 | 13.48 | 8.00 |
| 16 | 107.1 | 21.5 | 27.4 | 3.2 | 28.6 | 32.3 | 13.48 | 8.00 |
| 18 | 112.0 | 23.0 | 30.8 | 4.0 | 31.7 | 34.8 | 15.87 | 9.60 |
| 20 | 112.0 | 23.0 | 34.2 | 4.0 | 34.9 | 37.8 | 19.00 | 11.30 |
| 22 | 112.1 | 23.0 | 37.4 | 4.0 | 38.1 | 41.1 | 19.00 | 11.30 |
| 24 | 115.2 | 23.0 | 40.9 | 4.0 | 41.3 | 44.6 | 23.80 | 15.50 |
| 28 | 120.5 | 24.1 | 46.7 | 4.0 | 47.6 | 50.9 | 23.80 | 15.50 |
| 32 | 129.0 | 24.1 | 53.4 | 4.0 | 54.0 | 57.1 | 31.75 | 23.40 |
| 36 | 135.3 | 24.1 | 59.6 | 4.0 | 60.6 | 63.6 | 35.00 | 23.40 |
| 40 | 135.3 | 24.1 | 65.5 | 4.0 | 66.5 | 70.0 | 41.25 | 29.90 |

All dimensions for reference only.

# GT01R
## inline receptacle

- **With individual wire sealing grommet**
- **Includes backshell for conduit termination**
- **Environment proof**

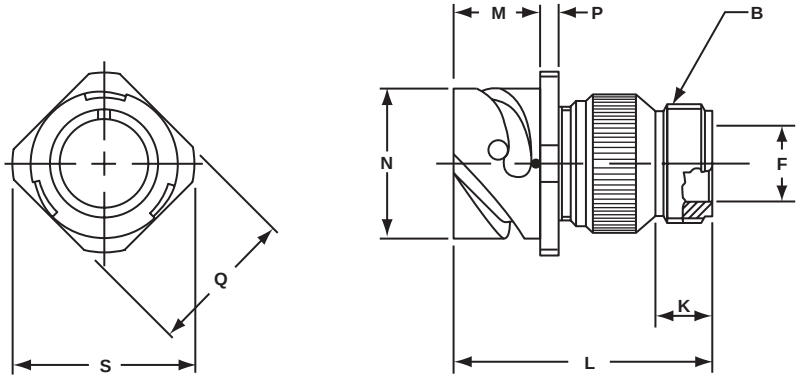


**Inches**

| Shell Size | B Thread Class 2A | F Min. | K Min. | L Max. | M + .016 – .000 | N + .000 – .006 | P ± .008 | Q ± .008 | S Max. |
|---|---|---|---|---|---|---|---|---|---|
| 10SL | .6250-24 UNEF | .409 | .374 | 1.969 | .717 | .717 | .110 | .811 | .992 |
| 14S | .7500-20 UNEF | .520 | .374 | 1.969 | .717 | .969 | .126 | 1.000 | 1.173 |
| 16S | .8750-20 UNEF | .638 | .374 | 1.969 | .717 | 1.079 | .126 | 1.126 | 1.272 |
| 16 | .8750-20 UNEF | .638 | .374 | 2.362 | .846 | 1.079 | .126 | 1.126 | 1.272 |
| 18 | 1.0000-20 UNEF | .756 | .374 | 2.362 | .907 | 1.213 | .157 | 1.248 | 1.370 |
| 20 | 1.1875-18 UNEF | .867 | .374 | 2.362 | .907 | 1.346 | .157 | 1.374 | 1.488 |
| 22 | 1.1875-18 UNEF | .965 | .374 | 2.362 | .907 | 1.472 | .157 | 1.500 | 1.618 |
| 24 | 1.4375-18 UNEF | 1.094 | .374 | 2.560 | .907 | 1.610 | .157 | 1.626 | 1.756 |
| 28 | 1.4375-18 UNEF | 1.228 | .374 | 2.560 | .947 | 1.839 | .157 | 1.874 | 2.004 |
| 32 | 1.7500-18 UNS | 1.488 | .433 | 2.560 | .947 | 2.102 | .157 | 2.126 | 2.248 |
| 36 | 2.0000-18 UNS | 1.780 | .465 | 3.150 | .947 | 2.346 | .157 | 2.386 | 2.504 |
| 40 | 2.2500-16 UN | 2.016 | .465 | 3.150 | .947 | 2.579 | .157 | 2.618 | 2.756 |

**Millimeters**

| Shell Size | F Min. | K Min. | L Max. | M + 0.4 – 0.0 | N + 0.00 – 0.15 | P ± 0.2 | Q ± 0.2 | S Max. |
|---|---|---|---|---|---|---|---|---|
| 10SL | 10.4 | 9.5 | 50 | 18.2 | 18.2 | 2.8 | 20.6 | 25.2 |
| 14S | 13.2 | 9.5 | 50 | 18.2 | 24.6 | 3.2 | 25.4 | 29.8 |
| 16S | 16.2 | 9.5 | 50 | 18.2 | 27.4 | 3.2 | 28.6 | 32.3 |
| 16 | 16.2 | 9.5 | 60 | 21.5 | 27.4 | 3.2 | 28.6 | 32.3 |
| 18 | 19.2 | 9.5 | 60 | 23.0 | 30.8 | 4.0 | 31.7 | 34.8 |
| 20 | 22.0 | 9.5 | 60 | 23.0 | 34.2 | 4.0 | 34.9 | 37.8 |
| 22 | 24.5 | 9.5 | 60 | 23.0 | 37.4 | 4.0 | 38.1 | 41.1 |
| 24 | 27.8 | 9.5 | 65 | 23.0 | 40.9 | 4.0 | 41.3 | 44.6 |
| 28 | 31.2 | 9.5 | 65 | 24.1 | 46.7 | 4.0 | 47.6 | 50.9 |
| 32 | 37.8 | 11.0 | 65 | 24.1 | 53.4 | 4.0 | 54.0 | 57.1 |
| 36 | 45.2 | 11.8 | 80 | 24.1 | 59.6 | 4.0 | 60.6 | 63.6 |
| 40 | 51.2 | 11.8 | 80 | 24.1 | 65.5 | 4.0 | 66.5 | 70.0 |

All dimensions for reference only.

# GT01RV
## inline receptacle

- **Includes wire sealing grommet**
- **For use with individual wires**
- **Environment proof**

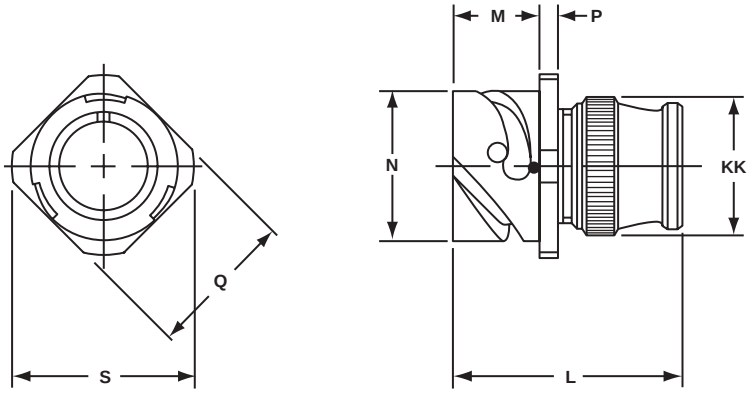


**Inches**

| Shell Size | L Max. | M + .016 – .000 | N + .000 – .006 | P ± .008 | Q ± .008 | S Max. | KK Max. |
|---|---|---|---|---|---|---|---|
| 10SL | 1.890 | .717 | .717 | .110 | .811 | .992 | .787 |
| 14S | 1.890 | .717 | .969 | .126 | 1.000 | 1.173 | .945 |
| 16S | 1.890 | .717 | 1.079 | .126 | 1.126 | 1.272 | 1.024 |
| 16 | 2.205 | .846 | 1.079 | .126 | 1.126 | 1.272 | 1.024 |
| 18 | 2.244 | .907 | 1.213 | .157 | 1.248 | 1.370 | 1.161 |
| 20 | 2.244 | .907 | 1.346 | .157 | 1.374 | 1.488 | 1.299 |
| 22 | 2.244 | .907 | 1.472 | .157 | 1.500 | 1.618 | 1.417 |
| 24 | 2.244 | .907 | 1.610 | .157 | 1.626 | 1.756 | 1.575 |
| 28 | 2.244 | .947 | 1.839 | .157 | 1.874 | 2.004 | 1.811 |
| 32 | 2.362 | .947 | 2.102 | .157 | 2.126 | 2.248 | 2.028 |
| 36 | 2.362 | .947 | 2.346 | .157 | 2.386 | 2.504 | 2.283 |
| 40 | 2.362 | .947 | 2.579 | .157 | 2.618 | 2.756 | 2.539 |

**Millimeters**

| Shell Size | L Max. | M + 0.4 – 0.0 | N + 0.00 – 0.15 | P ± 0.2 | Q ± 0.2 | S Max. | KK Max. |
|---|---|---|---|---|---|---|---|
| 10SL | 48.0 | 18.2 | 18.2 | 2.8 | 20.6 | 25.2 | 20.0 |
| 14S | 48.0 | 18.2 | 24.6 | 3.2 | 25.4 | 29.8 | 24.0 |
| 16S | 48.0 | 18.2 | 27.4 | 3.2 | 28.6 | 32.3 | 26.0 |
| 16 | 56.0 | 21.5 | 27.4 | 3.2 | 28.6 | 32.3 | 26.0 |
| 18 | 57.0 | 23.0 | 30.8 | 4.0 | 31.7 | 34.8 | 29.5 |
| 20 | 57.0 | 23.0 | 34.2 | 4.0 | 34.9 | 37.8 | 33.0 |
| 22 | 57.0 | 23.0 | 37.4 | 4.0 | 38.1 | 41.1 | 36.0 |
| 24 | 57.0 | 23.0 | 40.9 | 4.0 | 41.3 | 44.6 | 40.0 |
| 28 | 57.0 | 24.1 | 46.7 | 4.0 | 47.6 | 50.9 | 46.0 |
| 32 | 60.0 | 24.1 | 53.4 | 4.0 | 54.0 | 57.1 | 51.5 |
| 36 | 60.0 | 24.1 | 59.6 | 4.0 | 60.6 | 63.6 | 58.0 |
| 40 | 60.0 | 24.1 | 65.5 | 4.0 | 66.5 | 70.0 | 64.5 |

All dimensions for reference only.

# GT02R/02RFS
## box mount receptacle for front panel mounting

**GT02R**
- **Environment proof when mounted with proper panel sealing gasket (see page 79)**
- **For rear mounting information see page 85**

**GT02RFS**
- **Same as GT02R except mounting holes are countersunk to allow mating of plugs with rubber covered coupling nuts**

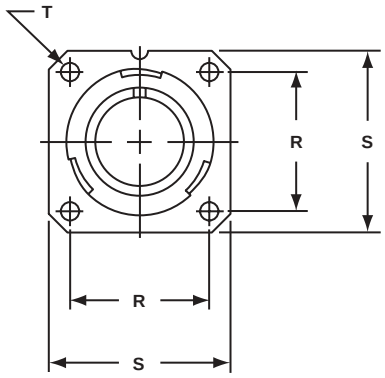


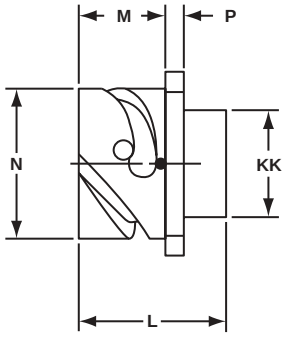


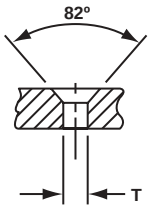


**GT02RFS**
**Countersunk holes required when mating with GT06CFGG, page 55 and GT08CFGG, page 73**

**Inches**

| Shell Size | L ± .012 | M + .016 − .000 | N + .000 − .006 | P ± .008 | R ± .004 | S ± .012 | T + .004 − .000 | KK Max. |
|---|---|---|---|---|---|---|---|---|
| 10SL | 1.087 | .717 | .717 | .110 | .717 | 1.000 | .126 | .626 |
| 14S | 1.087 | .717 | .969 | .126 | .906 | 1.181 | .126 | .756 |
| 16S | 1.087 | .717 | 1.079 | .126 | .969 | 1.280 | .126 | .882 |
| 16 | 1.331 | .846 | 1.079 | .126 | .969 | 1.280 | .126 | .882 |
| 18 | 1.331 | .907 | 1.213 | .157 | 1.063 | 1.378 | .126 | 1.008 |
| 20 | 1.331 | .907 | 1.346 | .157 | 1.157 | 1.496 | .126 | 1.142 |
| 22 | 1.331 | .907 | 1.472 | .157 | 1.252 | 1.614 | .126 | 1.268 |
| 24 | 1.331 | .907 | 1.610 | .157 | 1.374 | 1.752 | .146 | 1.390 |
| 28 | 1.406 | .947 | 1.839 | .157 | 1.563 | 2.000 | .146 | 1.630 |
| 32 | 1.469 | .947 | 2.102 | .157 | 1.752 | 2.244 | .169 | 1.882 |
| 36 | 1.469 | .947 | 2.346 | .157 | 1.937 | 2.500 | .169 | 2.063 |
| 40 | 1.469 | .947 | 2.579 | .157 | 2.185 | 2.752 | .169 | 2.323 |

| Shell Size | L ± 0.3 | M + 0.4 − 0.0 | N + 0.00 − 0.15 | P ± 0.2 | R ± 0.1 | S ± 0.3 | T + 0.1 − 0.0 | KK Max. |
|---|---|---|---|---|---|---|---|---|
| 10SL | 27.6 | 18.2 | 18.2 | 2.8 | 18.2 | 25.4 | 3.2 | 15.9 |
| 14S | 27.6 | 18.2 | 24.6 | 3.2 | 23.0 | 30.0 | 3.2 | 19.2 |
| 16S | 27.6 | 18.2 | 27.4 | 3.2 | 24.6 | 32.5 | 3.2 | 22.4 |
| 16 | 33.8 | 21.5 | 27.4 | 3.2 | 24.6 | 32.5 | 3.2 | 22.4 |
| 18 | 33.8 | 23.0 | 30.8 | 4.0 | 27.0 | 35.0 | 3.2 | 25.6 |
| 20 | 33.8 | 23.0 | 34.2 | 4.0 | 29.4 | 38.0 | 3.2 | 29.0 |
| 22 | 33.8 | 23.0 | 37.4 | 4.0 | 31.8 | 41.0 | 3.2 | 32.2 |
| 24 | 33.8 | 23.0 | 40.9 | 4.0 | 34.9 | 44.5 | 3.7 | 35.3 |
| 28 | 35.7 | 24.1 | 46.7 | 4.0 | 39.7 | 50.8 | 3.7 | 41.4 |
| 32 | 37.3 | 24.1 | 53.4 | 4.0 | 44.5 | 57.0 | 4.3 | 47.8 |
| 36 | 37.3 | 24.1 | 59.6 | 4.0 | 49.2 | 63.5 | 4.3 | 52.4 |
| 40 | 37.3 | 24.1 | 65.5 | 4.0 | 55.5 | 69.9 | 4.3 | 59.0 |

All dimensions for reference only.

# GT020R/020RFSM
## box mount receptacle for front panel mounting

**GT020R**
- **Threaded rear to accept accessory hardware**
- **Environment proof when mounted with proper panel sealing gasket (see page 79)**
- **For rear mounting information see page 85**

**GT020RFSM**
- **Same as GT020R except mounting holes are countersunk to allow mating of plugs with rubber covered coupling nuts**

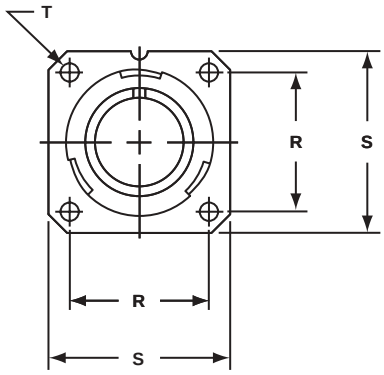


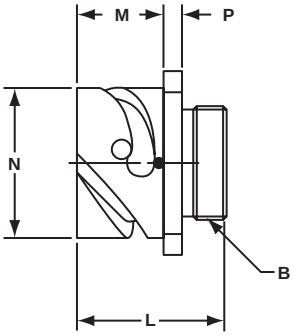


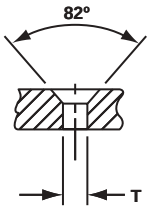


**GT020RFSM**
**Countersunk holes required when mating with GT06CFGG, page 55 and GT08CFGG, page 73**

**Inches**

| Shell Size | B Thread Class 2A | L ± .012 | M + .016 – .000 | N + .000 – .006 | P ± .008 | R ± .004 | S ± .012 | T + .004 – .000 |
|---|---|---|---|---|---|---|---|---|
| 10SL | .6250-24UNEF | 1.087 | .717 | .717 | .110 | .717 | 1.000 | .126 |
| 14S | .7500-20UNEF | 1.087 | .717 | .969 | .126 | .906 | 1.181 | .126 |
| 16S | .8750-20UNEF | 1.087 | .717 | 1.079 | .126 | .969 | 1.280 | .126 |
| 16 | .8750-20UNEF | 1.331 | .846 | 1.079 | .126 | .969 | 1.280 | .126 |
| 18 | 1.0000-20UNEF | 1.331 | .907 | 1.213 | .157 | 1.063 | 1.378 | .126 |
| 20 | 1.1250-18UNEF | 1.331 | .907 | 1.346 | .157 | 1.157 | 1.496 | .126 |
| 22 | 1.2500-18UNEF | 1.331 | .907 | 1.472 | .157 | 1.252 | 1.614 | .126 |
| 24 | 1.3750-18UNEF | 1.331 | .907 | 1.610 | .157 | 1.374 | 1.752 | .146 |
| 28 | 1.6250-18UNEF | 1.406 | .947 | 1.839 | .157 | 1.563 | 2.000 | .146 |
| 32 | 1.8750-16UN | 1.469 | .947 | 2.102 | .157 | 1.752 | 2.244 | .169 |
| 36 | 2.0625-16UN | 1.469 | .947 | 2.346 | .157 | 1.937 | 2.500 | .169 |
| 40 | 2.3125-16UN | 1.469 | .947 | 2.579 | .157 | 2.185 | 2.752 | .169 |

**Millimeters**

| Shell Size | L ± 0.3 | M + 0.4 – 0.0 | N + 0.00 – 0.15 | P ± 0.2 | R ± 0.1 | S ± 0.3 | T + 0.1 – 0.0 |
|---|---|---|---|---|---|---|---|
| 10SL | 27.6 | 18.2 | 18.2 | 2.8 | 18.2 | 25.4 | 3.2 |
| 14S | 27.6 | 18.2 | 24.6 | 3.2 | 23.0 | 30.0 | 3.2 |
| 16S | 27.6 | 18.2 | 27.4 | 3.2 | 24.6 | 32.5 | 3.2 |
| 16 | 33.8 | 21.5 | 27.4 | 3.2 | 24.6 | 32.5 | 3.2 |
| 18 | 33.8 | 23.0 | 30.8 | 4.0 | 27.0 | 35.0 | 3.2 |
| 20 | 33.8 | 23.0 | 34.2 | 4.0 | 29.4 | 38.0 | 3.2 |
| 22 | 33.8 | 23.0 | 37.4 | 4.0 | 31.8 | 41.0 | 3.2 |
| 24 | 33.8 | 23.0 | 40.9 | 4.0 | 34.9 | 44.5 | 3.7 |
| 28 | 35.7 | 24.1 | 46.7 | 4.0 | 39.7 | 50.8 | 3.7 |
| 32 | 37.3 | 24.1 | 53.4 | 4.0 | 44.5 | 57.0 | 4.3 |
| 36 | 37.3 | 24.1 | 59.6 | 4.0 | 49.2 | 63.5 | 4.3 |
| 40 | 37.3 | 24.1 | 65.5 | 4.0 | 55.5 | 69.9 | 4.3 |

All dimensions for reference only.

# GT030
## square flange receptacle for rear panel mounting

- **Four through mounting holes or optional threaded holes**
- **Threaded rear to accept accessory attachment**
- **Environment proof when mounted with a proper sealing gasket (see page 79)**

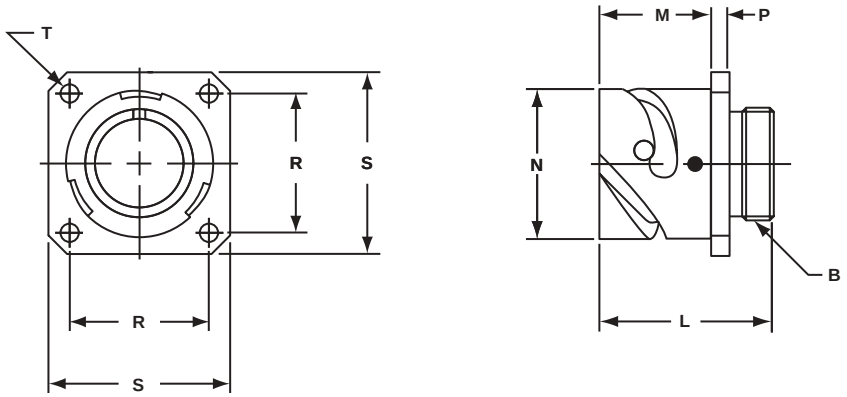


**Inches**

| Shell Size | B Thread Class 2A | L ± .012 | M + .016 − .000 | N + .000 − .006 | P ± .008 | R ± .004 | S ± .012 | T + .004 − .000 |
|---|---|---|---|---|---|---|---|---|
| 10SL | .6250-24UNEF | 1.087 | .717 | .717 | .110 | .717 | 1.000 | .126 |
| 14S | .7500-20UNEF | 1.087 | .717 | .969 | .126 | .906 | 1.181 | .126 |
| 16S | .8750-20UNEF | 1.087 | .717 | 1.079 | .126 | .969 | 1.280 | .126 |
| 16 | .8750-20UNEF | 1.331 | .846 | 1.079 | .126 | .969 | 1.280 | .126 |
| 18 | 1.0000-20UNEF | 1.331 | .907 | 1.213 | .157 | 1.063 | 1.378 | .126 |
| 20 | 1.1250-18UNEF | 1.331 | .907 | 1.346 | .157 | 1.157 | 1.496 | .126 |
| 22 | 1.2500-18UNEF | 1.331 | .907 | 1.472 | .157 | 1.252 | 1.614 | .126 |
| 24 | 1.3750-18UNEF | 1.331 | .907 | 1.610 | .157 | 1.374 | 1.752 | .146 |
| 28 | 1.6250-18UNEF | 1.406 | .947 | 1.839 | .157 | 1.563 | 2.000 | .146 |
| 32 | 1.8750-16UN | 1.469 | .947 | 2.102 | .157 | 1.752 | 2.244 | .169 |
| 36 | 2.0625-16UN | 1.469 | .947 | 2.346 | .157 | 1.937 | 2.500 | .169 |
| 40 | 2.3125-16UN | 1.469 | .947 | 2.579 | .157 | 2.185 | 2.752 | .169 |

**Millimeters**

| Shell Size | L ± 0.3 | M + 0.4 − 0.0 | N + 0.00 − 0.15 | P ± 0.2 | R ± 0.1 | S ± 0.3 | T + 0.1 − 0.0 |
|---|---|---|---|---|---|---|---|
| 10SL | 27.6 | 18.2 | 18.2 | 2.8 | 18.2 | 25.4 | 3.2 |
| 14S | 27.6 | 18.2 | 24.6 | 3.2 | 23.0 | 30.0 | 3.2 |
| 16S | 27.6 | 18.2 | 27.4 | 3.2 | 24.6 | 32.5 | 3.2 |
| 16 | 33.8 | 21.5 | 27.4 | 3.2 | 24.6 | 32.5 | 3.2 |
| 18 | 33.8 | 23.05 | 30.8 | 4.0 | 27.0 | 35.0 | 3.2 |
| 20 | 33.8 | 23.05 | 34.2 | 4.0 | 29.4 | 38.0 | 3.2 |
| 22 | 33.8 | 23.05 | 37.4 | 4.0 | 31.8 | 41.0 | 3.2 |
| 24 | 33.8 | 23.05 | 40.9 | 4.0 | 34.9 | 44.5 | 3.7 |
| 28 | 35.7 | 24.05 | 46.7 | 4.0 | 39.7 | 50.8 | 3.7 |
| 32 | 37.3 | 24.05 | 53.4 | 4.0 | 44.5 | 57.0 | 4.3 |
| 36 | 37.3 | 24.05 | 59.6 | 4.0 | 49.2 | 63.5 | 4.3 |
| 40 | 37.3 | 24.05 | 65.5 | 4.0 | 55.5 | 69.9 | 4.3 |

All dimensions for reference only.

# GT030A

## square flange receptacle for rear panel mounting

- **Four through mounting holes or optional threaded holes**
- **Backshell included for accessory attachment**
- **Without a wire sealing grommet and cable clamp**
- **Non-environment proof**

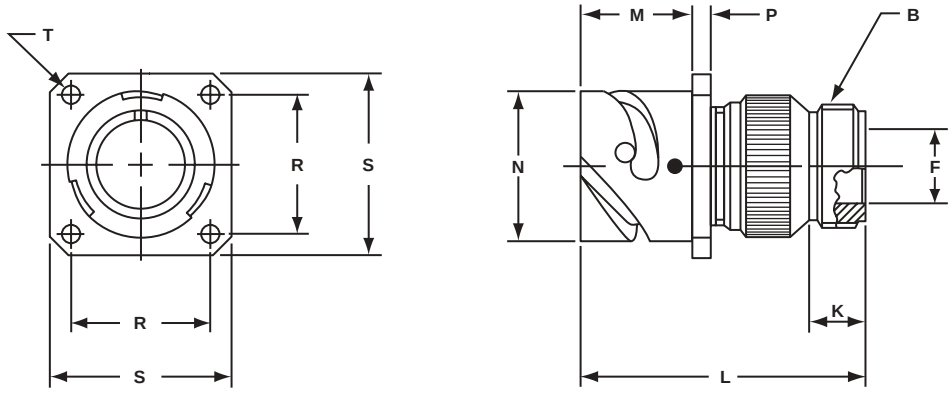


**Inches**

| Shell Size | B Thread Class 2A | F Min. | K Min. | L Max. | M + .016 – .000 | N + .000 – .006 | P ± .008 | R ± .004 | S ± .012 | T + .004 – .000 |
|---|---|---|---|---|---|---|---|---|---|---|
| 10SL | .6250-24 UNEF | .409 | .374 | 1.969 | .717 | .717 | .110 | .717 | 1.000 | .126 |
| 14S | .7500-20 UNEF | .520 | .374 | 1.969 | .717 | .969 | .126 | .906 | 1.181 | .126 |
| 16S | .8750-20 UNEF | .638 | .374 | 1.969 | .717 | 1.079 | .126 | .969 | 1.280 | .126 |
| 16 | .8750-20 UNEF | .638 | .374 | 2.362 | .846 | 1.079 | .126 | .969 | 1.280 | .126 |
| 18 | 1.0000-20 UNEF | .756 | .374 | 2.362 | .907 | 1.213 | .157 | 1.063 | 1.378 | .126 |
| 20 | 1.1875-18 UNEF | .867 | .374 | 2.362 | .907 | 1.346 | .157 | 1.157 | 1.496 | .126 |
| 22 | 1.1875-18 UNEF | .965 | .374 | 2.362 | .907 | 1.472 | .157 | 1.252 | 1.614 | .126 |
| 24 | 1.4375-18 UNEF | 1.094 | .374 | 2.560 | .907 | 1.610 | .157 | 1.374 | 1.752 | .146 |
| 28 | 1.4375-18 UNEF | 1.228 | .374 | 2.560 | .947 | 1.839 | .157 | 1.563 | 2.000 | .146 |
| 32 | 1.7500-18 UNS | 1.488 | .433 | 2.560 | .947 | 2.102 | .157 | 1.752 | 2.244 | .169 |
| 36 | 2.0000-18 UNS | 1.780 | .465 | 3.150 | .947 | 2.346 | .157 | 1.937 | 2.500 | .169 |
| 40 | 2.2500-16 UN | 2.016 | .465 | 3.150 | .947 | 2.579 | .157 | 2.185 | 2.752 | .169 |

**Millimeters**

| Shell Size | F Min. | K Min. | L Max. | M + 0.4 – 0.0 | N + 0.00 – 0.15 | P ± 0.2 | R ± 0.1 | S ± 0.3 | T + 0.1 – 0.0 |
|---|---|---|---|---|---|---|---|---|---|
| 10SL | 10.4 | 9.5 | 50 | 18.20 | 18.2 | 2.8 | 18.2 | 25.4 | 3.2 |
| 14S | 13.2 | 9.5 | 50 | 18.20 | 24.6 | 3.2 | 23.0 | 30.0 | 3.2 |
| 16S | 16.2 | 9.5 | 50 | 18.20 | 27.4 | 3.2 | 24.6 | 32.5 | 3.2 |
| 16 | 16.2 | 9.5 | 60 | 21.50 | 27.4 | 3.2 | 24.6 | 32.5 | 3.2 |
| 18 | 19.2 | 9.5 | 60 | 23.05 | 30.8 | 4.0 | 27.0 | 35.0 | 3.2 |
| 20 | 22.0 | 9.5 | 60 | 23.05 | 34.2 | 4.0 | 29.4 | 38.0 | 3.2 |
| 22 | 24.5 | 9.5 | 60 | 23.05 | 37.4 | 4.0 | 31.8 | 41.0 | 3.2 |
| 24 | 27.8 | 9.5 | 65 | 23.05 | 40.9 | 4.0 | 34.9 | 44.5 | 3.7 |
| 28 | 31.2 | 9.5 | 65 | 24.05 | 46.7 | 4.0 | 39.7 | 50.8 | 3.7 |
| 32 | 37.8 | 11.0 | 65 | 24.05 | 53.4 | 4.0 | 44.5 | 57.0 | 4.3 |
| 36 | 45.2 | 11.8 | 80 | 24.05 | 59.6 | 4.0 | 49.2 | 63.5 | 4.3 |
| 40 | 51.2 | 11.8 | 80 | 24.05 | 65.5 | 4.0 | 55.5 | 69.9 | 4.3 |

All dimensions for reference only.

# GT030AF/030F

## square flange receptacle for rear panel mounting

**GT030AF**
- **Includes a cable clamp**
- **Wire sealing grommet not included**
- **Non-environment proof**
- **Four through mounting holes or optional threaded holes**

**GT030F**
- **Includes a wire sealing grommet and cable clamp**
- **For use with individual wires**
- **Environment proof**
- **Four through mounting holes or optional threaded holes**

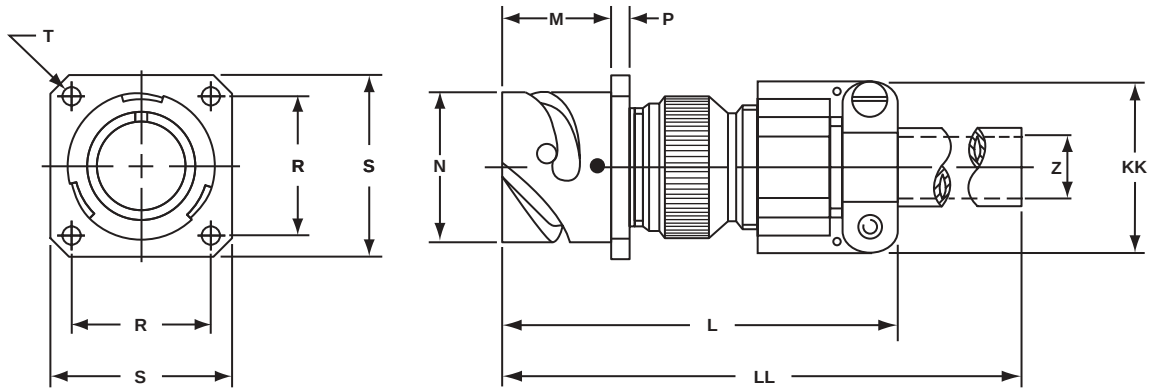


**Inches**

| Shell Size | L Max. | M + .016 – .000 | N + .000 – .006 | P ± .008 | R ± .004 | S ± .012 | T + .004 – .000 | Z Nominal | KK Max. | LL Max. |
|---|---|---|---|---|---|---|---|---|---|---|
| 10SL | 2.362 | .717 | .717 | .110 | .717 | 1.000 | .126 | .220 | .894 | 4.720 |
| 14S | 2.440 | .717 | .969 | .126 | .906 | 1.181 | .126 | .312 | 1.083 | 4.720 |
| 16S | 2.756 | .717 | 1.079 | .126 | .969 | 1.280 | .126 | .437 | 1.181 | 4.720 |
| 16 | 2.756 | .846 | 1.079 | .126 | .969 | 1.280 | .126 | .437 | 1.181 | 4.921 |
| 18 | 3.031 | .907 | 1.213 | .157 | 1.063 | 1.378 | .126 | .562 | 1.300 | 4.921 |
| 20 | 3.031 | .907 | 1.346 | .157 | 1.157 | 1.496 | .126 | .625 | 1.476 | 4.921 |
| 22 | 3.031 | .907 | 1.472 | .157 | 1.252 | 1.614 | .126 | .625 | 1.476 | 4.921 |
| 24 | 3.346 | .907 | 1.610 | .157 | 1.374 | 1.752 | .146 | .750 | 1.705 | 4.921 |
| 28 | 3.346 | .947 | 1.839 | .157 | 1.563 | 2.000 | .146 | .750 | 1.705 | 4.921 |
| 32 | 3.346 | .947 | 2.102 | .157 | 1.752 | 2.244 | .169 | .937 | 2.035 | 4.921 |
| 36 | 4.134 | .947 | 2.346 | .157 | 1.937 | 2.500 | .169 | 1.250 | 2.283 | 5.315 |
| 40 | 5.118 | .947 | 2.579 | .157 | 2.185 | 2.752 | .169 | 1.375 | 2.579 | 5.709 |

**Millimeters**

| Shell Size | L Max. | M + 0.4 – 0.0 | N + 0.00 – 0.15 | P ± 0.2 | R ± 0.1 | S ± 0.3 | T + 0.1 – 0.0 | Z Nominal | KK Max. | LL Max. |
|---|---|---|---|---|---|---|---|---|---|---|
| 10SL | 60 | 18.20 | 18.2 | 2.8 | 18.2 | 25.4 | 3.2 | 5.58 | 22.7 | 120 |
| 14S | 62 | 18.20 | 24.6 | 3.2 | 23.0 | 30.0 | 3.2 | 7.92 | 27.5 | 120 |
| 16S | 70 | 18.20 | 27.4 | 3.2 | 24.6 | 32.5 | 3.2 | 11.09 | 30.0 | 120 |
| 16 | 70 | 21.50 | 27.4 | 3.2 | 24.6 | 32.5 | 3.2 | 11.09 | 30.0 | 125 |
| 18 | 77 | 23.05 | 30.8 | 4.0 | 27.0 | 35.0 | 3.2 | 14.27 | 33.0 | 125 |
| 20 | 77 | 23.05 | 34.2 | 4.0 | 29.4 | 38.0 | 3.2 | 15.87 | 37.5 | 125 |
| 22 | 77 | 23.05 | 37.4 | 4.0 | 31.8 | 41.0 | 3.2 | 15.87 | 37.5 | 125 |
| 24 | 85 | 23.05 | 40.9 | 4.0 | 34.9 | 44.5 | 3.7 | 19.05 | 43.3 | 125 |
| 28 | 85 | 24.05 | 46.7 | 4.0 | 39.7 | 50.8 | 3.7 | 19.05 | 43.3 | 125 |
| 32 | 85 | 24.05 | 53.4 | 4.0 | 44.5 | 57.0 | 4.3 | 23.79 | 51.7 | 125 |
| 36 | 105 | 24.05 | 59.6 | 4.0 | 49.2 | 63.5 | 4.3 | 31.75 | 58.0 | 135 |
| 40 | 130 | 24.05 | 65.5 | 4.0 | 55.5 | 69.9 | 4.3 | 34.92 | 65.5 | 145 |

All dimensions for reference only.

# GT030G

## square flange receptacle for rear panel mounting

- **Four through mounting holes or optional threaded holes**
- **With wire sealing grommet for individual wires**
- **Includes backshell for use with heat-shrink tubing**
- **Environment proof**

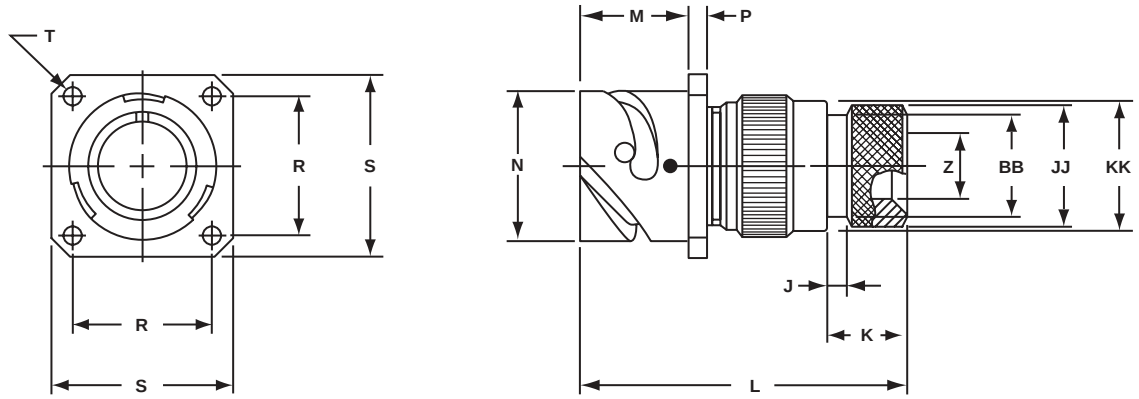


**Inches**

| Shell Size | J ± .008 | K ± .020 | L Max. | M + .016 – .000 | N + .000 – .006 | P ± .008 | R ± .004 | S ± .012 | T + .004 – .000 | Z Min. | BB Max. | JJ ± .008 | KK ± .008 |
|---|---|---|---|---|---|---|---|---|---|---|---|---|---|
| 10SL | .138 | .461 | 1.969 | .717 | .717 | .110 | .717 | 1.000 | .126 | .303 | .524 | .610 | .669 |
| 14S | .138 | .461 | 1.969 | .717 | .969 | .126 | .906 | 1.181 | .126 | .417 | .669 | .752 | .791 |
| 16S | .138 | .461 | 1.969 | .717 | 1.079 | .126 | .969 | 1.280 | .126 | .531 | .862 | .941 | .925 |
| 16 | .138 | .453 | 2.362 | .846 | 1.079 | .126 | .969 | 1.280 | .126 | .531 | .862 | .941 | .925 |
| 18 | .138 | .453 | 2.362 | .907 | 1.213 | .157 | 1.063 | 1.378 | .126 | .575 | .862 | .941 | 1.043 |
| 20 | .138 | .500 | 2.559 | .907 | 1.346 | .157 | 1.157 | 1.496 | .126 | .736 | 1.031 | 1.165 | 1.189 |
| 22 | .138 | .500 | 2.559 | .907 | 1.472 | .157 | 1.252 | 1.614 | .126 | .819 | 1.031 | 1.165 | 1.323 |
| 24 | .138 | .500 | 2.559 | .907 | 1.610 | .157 | 1.374 | 1.752 | .146 | .969 | 1.358 | 1.488 | 1.421 |
| 28 | .138 | .500 | 2.559 | .947 | 1.839 | .157 | 1.563 | 2.000 | .146 | 1.063 | 1.358 | 1.488 | 1.630 |
| 32 | .138 | .598 | 2.756 | .947 | 2.102 | .157 | 1.752 | 2.244 | .169 | 1.311 | 1.717 | 1.882 | 1.913 |
| 36 | .138 | .598 | 3.150 | .947 | 2.346 | .157 | 1.937 | 2.500 | .169 | 1.516 | 1.717 | 1.882 | 2.157 |
| 40 | .138 | .610 | 3.150 | .947 | 2.579 | 1.57 | 2.185 | 2.752 | .169 | 1.898 | 2.071 | 2.276 | 2.402 |

**Millimeters**

| Shell Size | J ± 0.2 | K ± 0.5 | L Max. | M + 0.4 – 0.0 | N + 0.00 – 0.15 | P ± 0.2 | R ± 0.1 | S ± 0.3 | T + 0.1 – 0.0 | Z Min. | B Max. | JJ ± 0.2 | KK ± 0.2 |
|---|---|---|---|---|---|---|---|---|---|---|---|---|---|
| 10SL | 3.5 | 11.7 | 50 | 18.20 | 18.2 | 2.8 | 18.2 | 25.4 | 3.2 | 7.7 | 13.3 | 15.5 | 17.0 |
| 14S | 3.5 | 11.7 | 50 | 18.20 | 24.6 | 3.2 | 23.0 | 30.0 | 3.2 | 10.6 | 17.0 | 19.1 | 20.1 |
| 16S | 3.5 | 11.7 | 50 | 18.20 | 27.4 | 3.2 | 24.6 | 32.5 | 3.2 | 13.5 | 21.9 | 23.9 | 23.5 |
| 16 | 3.5 | 11.5 | 60 | 21.50 | 27.4 | 3.2 | 24.6 | 32.5 | 3.2 | 13.5 | 21.9 | 23.9 | 23.5 |
| 18 | 3.5 | 11.5 | 60 | 23.05 | 30.8 | 4.0 | 27.0 | 35.0 | 3.2 | 14.6 | 21.9 | 23.9 | 26.5 |
| 20 | 3.5 | 12.7 | 65 | 23.05 | 34.2 | 4.0 | 29.4 | 38.0 | 3.2 | 18.7 | 26.2 | 29.6 | 30.2 |
| 22 | 3.5 | 12.7 | 65 | 23.05 | 37.4 | 4.0 | 31.8 | 41.0 | 3.2 | 20.8 | 26.2 | 29.6 | 33.6 |
| 24 | 3.5 | 12.7 | 65 | 23.05 | 40.9 | 4.0 | 34.9 | 44.5 | 3.7 | 24.6 | 34.5 | 37.8 | 36.1 |
| 28 | 3.5 | 12.7 | 65 | 24.05 | 46.7 | 4.0 | 39.7 | 50.8 | 3.7 | 27.0 | 34.5 | 37.8 | 41.4 |
| 32 | 3.5 | 15.2 | 70 | 24.05 | 53.4 | 4.0 | 44.5 | 57.0 | 4.3 | 33.3 | 43.6 | 47.8 | 48.6 |
| 36 | 3.5 | 15.2 | 80 | 24.05 | 59.6 | 4.0 | 49.2 | 63.5 | 4.3 | 38.5 | 43.6 | 47.8 | 54.8 |
| 40 | 3.5 | 15.5 | 80 | 24.05 | 65.5 | 4.0 | 55.5 | 69.9 | 4.3 | 48.2 | 52.6 | 57.8 | 61.0 |

All dimensions for reference only.

# GT030LCF/030LCFZ

## square flange receptacle for rear panel mounting

**GT030LCF**
- **Four through mounting holes or optional threaded holes**
- **With cable clamp and seal**
- **Long backshell provides more working room for jacketed cable**
- **Environment proof**

**GT030LCFZ**
- **Same as GT030LCF except: Individual wire sealing grommet for added moisture protection**
- **Environment proof**

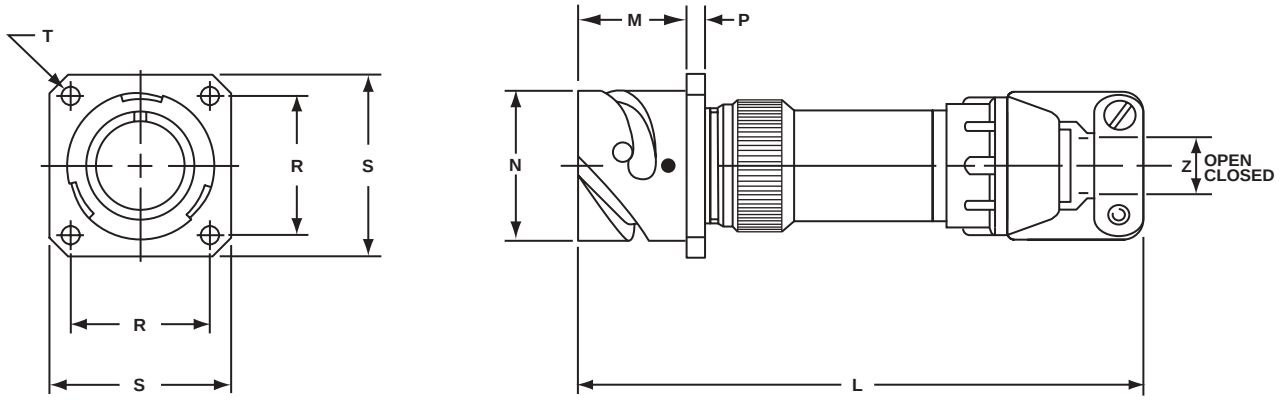


**Inches**

| Shell Size | L Approx. | M +.016 –.000 | N +.000 –.006 | P ±.008 | R ±.004 | S ±.012 | T +.004 –.000 | Z Open | Z Closed |
|---|---|---|---|---|---|---|---|---|---|
| 10SL | 3.811 | .717 | .717 | .110 | .717 | 1.000 | .126 | .312 | .094 |
| 14S | 3.843 | .717 | .969 | .126 | .906 | 1.181 | .126 | .438 | .230 |
| 16S | 3.843 | .717 | 1.079 | .126 | .969 | 1.280 | .126 | .531 | .315 |
| 16 | 4.217 | .846 | 1.079 | .126 | .969 | 1.280 | .126 | .531 | .315 |
| 18 | 4.409 | .907 | 1.213 | .157 | 1.063 | 1.378 | .126 | .625 | .378 |
| 20 | 4.409 | .907 | 1.346 | .157 | 1.157 | 1.496 | .126 | .748 | .445 |
| 22 | 4.413 | .907 | 1.472 | .157 | 1.252 | 1.614 | .126 | .748 | .445 |
| 24 | 4.535 | .907 | 1.610 | .157 | 1.374 | 1.752 | .146 | .937 | .610 |
| 28 | 4.744 | .947 | 1.839 | .157 | 1.563 | 2.000 | .146 | .937 | .610 |
| 32 | 5.079 | .947 | 2.102 | .157 | 1.752 | 2.244 | .169 | 1.250 | .921 |
| 36 | 5.327 | .947 | 2.346 | .157 | 1.937 | 2.500 | .169 | 1.378 | .921 |
| 40 | 5.327 | .947 | 2.579 | 1.57 | 2.185 | 2.752 | .169 | 1.624 | 1.177 |

**Millimeters**

| Shell Size | L Approx. | M + 0.4 – 0.0 | N + 0.00 – 0.15 | P ± 0.2 | R ± 0.1 | S ± 0.3 | T + 0.1 – 0.0 | Z Open | Z Closed |
|---|---|---|---|---|---|---|---|---|---|
| 10SL | 96.8 | 18.20 | 18.2 | 2.8 | 18.2 | 25.4 | 3.2 | 7.93 | 2.38 |
| 14S | 97.6 | 18.20 | 24.6 | 3.2 | 23.0 | 30.0 | 3.2 | 11.12 | 5.84 |
| 16S | 97.6 | 18.20 | 27.4 | 3.2 | 24.6 | 32.5 | 3.2 | 13.48 | 8.00 |
| 16 | 107.1 | 21.50 | 27.4 | 3.2 | 24.6 | 32.5 | 3.2 | 13.48 | 8.00 |
| 18 | 112.0 | 23.05 | 30.8 | 4.0 | 27.0 | 35.0 | 3.2 | 15.87 | 9.60 |
| 20 | 112.0 | 23.05 | 34.2 | 4.0 | 29.4 | 38.0 | 3.2 | 19.00 | 11.30 |
| 22 | 112.1 | 23.05 | 37.4 | 4.0 | 31.8 | 41.0 | 3.2 | 19.00 | 11.30 |
| 24 | 115.2 | 23.05 | 40.9 | 4.0 | 34.9 | 44.5 | 3.7 | 23.80 | 15.50 |
| 28 | 120.5 | 24.05 | 46.7 | 4.0 | 39.7 | 50.8 | 3.7 | 23.80 | 15.50 |
| 32 | 129.0 | 24.05 | 53.4 | 4.0 | 44.5 | 57.0 | 4.3 | 31.75 | 23.40 |
| 36 | 135.3 | 24.05 | 59.6 | 4.0 | 49.2 | 63.5 | 4.3 | 35.00 | 23.40 |
| 40 | 135.3 | 24.05 | 65.5 | 4.0 | 55.5 | 69.9 | 4.3 | 41.25 | 29.90 |

All dimensions for reference only.

# GT030R

## square flange receptacle for rear panel mounting

- **Four through mounting holes or optional threaded holes**
- **With a wire sealing grommet for individual wires**
- **Includes backshell for conduit termination**
- **Environment proof**

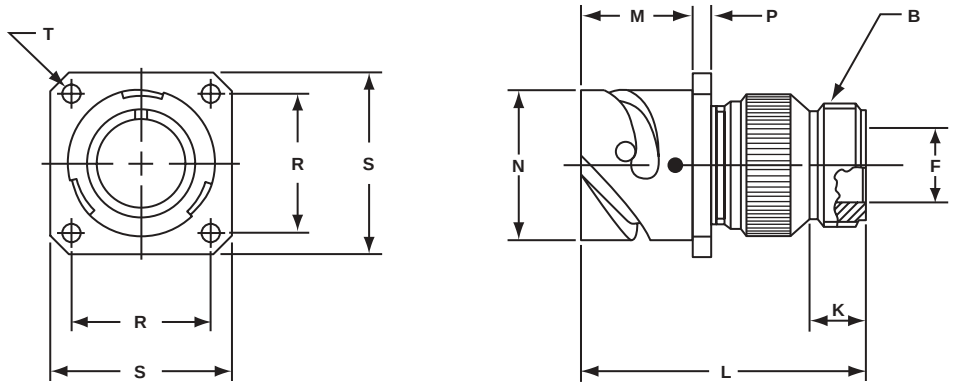


**Inches**

| Shell Size | B Thread Class 2A | F Min. | K Min. | L Max. | M + .016 – .000 | N + .000 – .006 | P ± .008 | R ± .004 | S ± .012 | T + .004 – .000 |
|---|---|---|---|---|---|---|---|---|---|---|
| 10SL | .6250-24 UNEF | .409 | .374 | 1.969 | .717 | .717 | .110 | .717 | 1.000 | .126 |
| 14S | .7500-20 UNEF | .520 | .374 | 1.969 | .717 | .969 | .126 | .906 | 1.181 | .126 |
| 16S | .8750-20 UNEF | .638 | .374 | 1.969 | .717 | 1.079 | .126 | .969 | 1.280 | .126 |
| 16 | .8750-20 UNEF | .638 | .374 | 2.362 | .846 | 1.079 | .126 | .969 | 1.280 | .126 |
| 18 | 1.0000-20 UNEF | .756 | .374 | 2.362 | .907 | 1.213 | .157 | 1.063 | 1.378 | .126 |
| 20 | 1.1875-18 UNEF | .867 | .374 | 2.362 | .907 | 1.346 | .157 | 1.157 | 1.496 | .126 |
| 22 | 1.1875-18 UNEF | .965 | .374 | 2.362 | .907 | 1.472 | .157 | 1.252 | 1.614 | .126 |
| 24 | 1.4375-18 UNEF | 1.094 | .374 | 2.560 | .907 | 1.610 | .157 | 1.374 | 1.752 | .146 |
| 28 | 1.4375-18 UNEF | 1.228 | .374 | 2.560 | .947 | 1.839 | .157 | 1.563 | 2.000 | .146 |
| 32 | 1.7500-18 UNS | 1.488 | .433 | 2.560 | .947 | 2.102 | .157 | 1.752 | 2.244 | .169 |
| 36 | 2.0000-18 UNS | 1.780 | .465 | 3.150 | .947 | 2.346 | .157 | 1.937 | 2.500 | .169 |
| 40 | 2.2500-16 UN | 2.016 | .465 | 3.150 | .947 | 2.579 | .157 | 2.185 | 2.752 | .169 |

**Millimeters**

| Shell Size | F Min. | K Min. | L Max. | M + 0.4 – 0.0 | N + 0.00 – 0.15 | P ± 0.2 | R ± 0.1 | S ± 0.3 | T + 0.1 – 0.0 |
|---|---|---|---|---|---|---|---|---|---|
| 10SL | 10.4 | 9.5 | 50 | 18.20 | 18.2 | 2.8 | 18.2 | 25.4 | 3.2 |
| 14S | 13.2 | 9.5 | 50 | 18.20 | 24.6 | 3.2 | 23.0 | 30.0 | 3.2 |
| 16S | 16.2 | 9.5 | 50 | 18.20 | 27.4 | 3.2 | 24.6 | 32.5 | 3.2 |
| 16 | 16.2 | 9.5 | 60 | 21.50 | 27.4 | 3.2 | 24.6 | 32.5 | 3.2 |
| 18 | 19.2 | 9.5 | 60 | 23.05 | 30.8 | 4.0 | 27.0 | 35.0 | 3.2 |
| 20 | 22.0 | 9.5 | 60 | 23.05 | 34.2 | 4.0 | 29.4 | 38.0 | 3.2 |
| 22 | 24.5 | 9.5 | 60 | 23.05 | 37.4 | 4.0 | 31.8 | 41.0 | 3.2 |
| 24 | 27.8 | 9.5 | 65 | 23.05 | 40.9 | 4.0 | 34.9 | 44.5 | 3.7 |
| 28 | 31.2 | 9.5 | 65 | 24.05 | 46.7 | 4.0 | 39.7 | 50.8 | 3.7 |
| 32 | 37.8 | 11.0 | 65 | 24.05 | 53.4 | 4.0 | 44.5 | 57.0 | 4.3 |
| 36 | 45.2 | 11.8 | 80 | 24.05 | 59.6 | 4.0 | 49.2 | 63.5 | 4.3 |
| 40 | 51.2 | 11.8 | 80 | 24.05 | 65.5 | 4.0 | 55.5 | 69.9 | 4.3 |

All dimensions for reference only.

# GT030RV

## square flange receptacle for rear panel mounting

- **Four through mounting holes or optional threaded holes**
- **With wire sealing grommet for individual wires**
- **Environment proof**

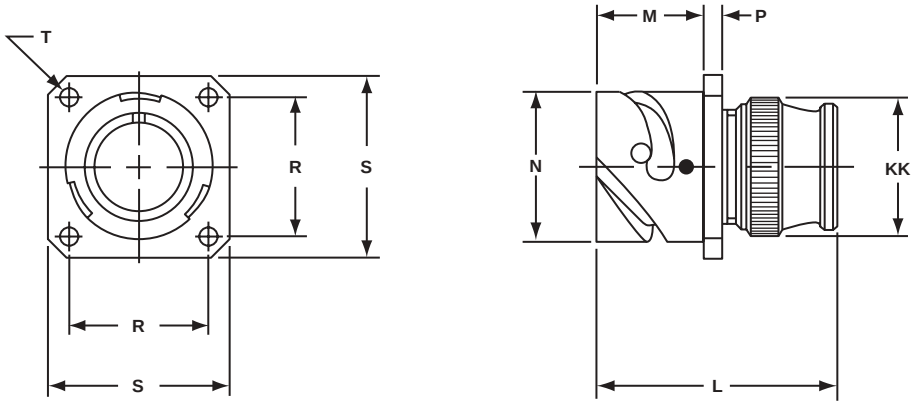


**Inches**

| Shell Size | L Max. | M + .016 – .000 | N + .000 – .006 | P ± .008 | R ± .004 | S ± .012 | T + .004 – .000 | KK Max. |
|---|---|---|---|---|---|---|---|---|
| 10SL | 1.890 | .717 | .717 | .110 | .717 | 1.000 | .126 | .787 |
| 14S | 1.890 | .717 | .969 | .126 | .906 | 1.181 | .126 | .945 |
| 16S | 1.890 | .717 | 1.079 | .126 | .969 | 1.280 | .126 | 1.024 |
| 16 | 2.205 | .846 | 1.079 | .126 | .969 | 1.280 | .126 | 1.024 |
| 18 | 2.244 | .907 | 1.213 | .157 | 1.063 | 1.378 | .126 | 1.161 |
| 20 | 2.244 | .907 | 1.346 | .157 | 1.157 | 1.496 | .126 | 1.299 |
| 22 | 2.244 | .907 | 1.472 | .157 | 1.252 | 1.614 | .126 | 1.417 |
| 24 | 2.244 | .907 | 1.610 | .157 | 1.374 | 1.752 | .146 | 1.575 |
| 28 | 2.244 | .947 | 1.839 | .157 | 1.563 | 2.000 | .146 | 1.811 |
| 32 | 2.362 | .947 | 2.102 | .157 | 1.752 | 2.244 | .169 | 2.028 |
| 36 | 2.362 | .947 | 2.346 | .157 | 1.937 | 2.500 | .169 | 2.283 |
| 40 | 2.362 | .947 | 2.579 | .157 | 2.185 | 2.752 | .169 | 2.539 |

**Millimeters**

| Shell Size | L Max. | M + 0.4 – 0.0 | N + 0.00 – 0.15 | P ± 0.2 | R ± 0.1 | S ± 0.3 | T + 0.1 – 0.0 | KK Max. |
|---|---|---|---|---|---|---|---|---|
| 10SL | 48.0 | 18.20 | 18.2 | 2.8 | 18.2 | 25.4 | 3.2 | 20.0 |
| 14S | 48.0 | 18.20 | 24.6 | 3.2 | 23.0 | 30.0 | 3.2 | 24.0 |
| 16S | 48.0 | 18.20 | 27.4 | 3.2 | 24.6 | 32.5 | 3.2 | 26.0 |
| 16 | 56.0 | 21.50 | 27.4 | 3.2 | 24.6 | 32.5 | 3.2 | 26.0 |
| 18 | 57.0 | 23.05 | 30.8 | 4.0 | 27.0 | 35.0 | 3.2 | 29.5 |
| 20 | 57.0 | 23.05 | 34.2 | 4.0 | 29.4 | 38.0 | 3.2 | 33.0 |
| 22 | 57.0 | 23.05 | 37.4 | 4.0 | 31.8 | 41.0 | 3.2 | 36.0 |
| 24 | 57.0 | 23.05 | 40.9 | 4.0 | 34.9 | 44.5 | 3.7 | 40.0 |
| 28 | 57.0 | 24.05 | 46.7 | 4.0 | 39.7 | 50.8 | 3.7 | 46.0 |
| 32 | 60.0 | 24.05 | 53.4 | 4.0 | 44.5 | 57.0 | 4.3 | 51.5 |
| 36 | 60.0 | 24.05 | 59.6 | 4.0 | 49.2 | 63.5 | 4.3 | 58.0 |
| 40 | 60.0 | 24.05 | 65.5 | 4.0 | 55.5 | 69.9 | 4.3 | 64.5 |

All dimensions for reference only.

# GT06A
## straight plug

- **Without grommet and cable clamp**
- **If a cable clamp is required, see pages 82 and 84**
- **Non-environment proof**

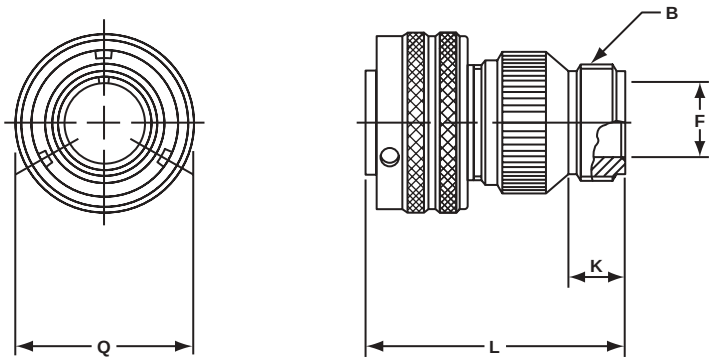


**Inches**

| Shell Size | B Thread Class 2A | F Min. | K Min. | L Max. | Q Max. |
|---|---|---|---|---|---|
| 10SL | .6250-24UNEF | .409 | .374 | 1.969 | .898 |
| 14S | .7500-20UNEF | .520 | .374 | 1.969 | 1.150 |
| 16S | .8750-20UNEF | .638 | .374 | 1.969 | 1.260 |
| 16 | .8750-20UNEF | .638 | .374 | 2.362 | 1.260 |
| 18 | 1.0000-20UNEF | .756 | .374 | 2.362 | 1.437 |
| 20 | 1.1875-18UNEF | .867 | .374 | 2.362 | 1.571 |
| 22 | 1.1875-18UNEF | .965 | .374 | 2.362 | 1.697 |
| 24 | 1.4375-18UNEF | 1.094 | .374 | 2.560 | 1.835 |
| 28 | 1.4375-18UNEF | 1.228 | .374 | 2.560 | 2.102 |
| 32 | 1.7500-18UNS | 1.488 | .433 | 2.560 | 2.366 |
| 36 | 2.0000-18UNS | 1.780 | .465 | 3.150 | 2.610 |
| 40 | 2.2500-16UN | 2.016 | .465 | 3.150 | 2.850 |

**Millimeters**

| Shell Size | F Min. | K Min. | L Max. | Q Max. |
|---|---|---|---|---|
| 10SL | 10.4 | 9.5 | 50 | 22.8 |
| 14S | 13.2 | 9.5 | 50 | 29.2 |
| 16S | 16.2 | 9.5 | 50 | 32.0 |
| 16 | 16.2 | 9.5 | 60 | 32.0 |
| 18 | 19.2 | 9.5 | 60 | 36.5 |
| 20 | 22.0 | 9.5 | 60 | 39.9 |
| 22 | 24.5 | 9.5 | 60 | 43.1 |
| 24 | 27.8 | 9.5 | 65 | 46.6 |
| 28 | 31.2 | 9.5 | 65 | 53.4 |
| 32 | 37.8 | 11.0 | 65 | 60.1 |
| 36 | 45.2 | 11.8 | 80 | 66.3 |
| 40 | 51.2 | 11.8 | 80 | 72.4 |

All dimensions for reference only.

# GT06AF/06F
## straight plug

**GT06AF**
- **With a cable clamp**
- **Wire sealing grommet not supplied**
- **Non-environment proof**

**GT06F**
- **With a wire sealing grommet and cable clamp**
- **For use with individual wires**
- **Environment proof**

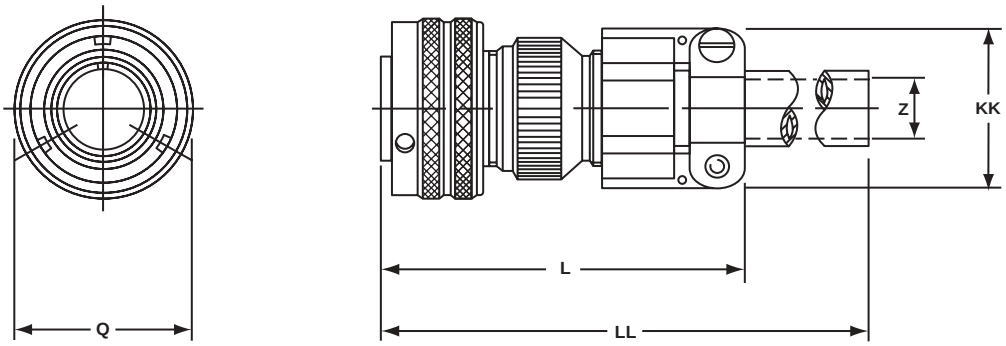


**Inches**

| Shell Size | L Max. | Q Max. | Z Nominal | KK Max. | LL Max. |
|---|---|---|---|---|---|
| 10SL | 2.165 | .898 | .220 | .894 | 4.724 |
| 14S | 2.362 | 1.150 | .312 | 1.083 | 4.724 |
| 16S | 2.756 | 1.260 | .437 | 1.181 | 4.724 |
| 16 | 2.756 | 1.260 | .437 | 1.181 | 4.921 |
| 18 | 2.953 | 1.437 | .562 | 1.299 | 4.921 |
| 20 | 2.953 | 1.571 | .625 | 1.476 | 4.921 |
| 22 | 2.953 | 1.697 | .625 | 1.476 | 4.921 |
| 24 | 3.543 | 1.835 | .750 | 1.705 | 4.921 |
| 28 | 3.543 | 2.102 | .750 | 1.705 | 4.921 |
| 32 | 3.543 | 2.366 | .937 | 2.035 | 4.921 |
| 36 | 3.937 | 2.610 | 1.250 | 2.283 | 5.315 |
| 40 | 4.921 | 2.850 | 1.375 | 2.579 | 5.709 |

**Millimeters**

| Shell Size | L Max. | Q Max. | Z Nominal | KK Max. | LL Max. |
|---|---|---|---|---|---|
| 10SL | 55 | 22.8 | 5.58 | 22.7 | 120 |
| 14S | 60 | 29.2 | 7.92 | 27.5 | 120 |
| 16S | 70 | 32.0 | 11.09 | 30.0 | 120 |
| 16 | 70 | 32.0 | 11.09 | 30.0 | 125 |
| 18 | 75 | 36.5 | 14.27 | 33.0 | 125 |
| 20 | 75 | 39.9 | 15.87 | 37.5 | 125 |
| 22 | 75 | 43.1 | 15.87 | 37.5 | 125 |
| 24 | 90 | 46.6 | 19.05 | 43.3 | 125 |
| 28 | 90 | 53.4 | 19.05 | 43.3 | 125 |
| 32 | 90 | 60.1 | 23.79 | 51.7 | 125 |
| 36 | 100 | 66.3 | 31.75 | 58.0 | 135 |
| 40 | 125 | 72.4 | 34.92 | 65.5 | 145 |

All dimensions for reference only.

# GT06CF
## straight plug

- **With a cable clamp and seal**
- **For use with jacketed cable**
- **Environment proof**

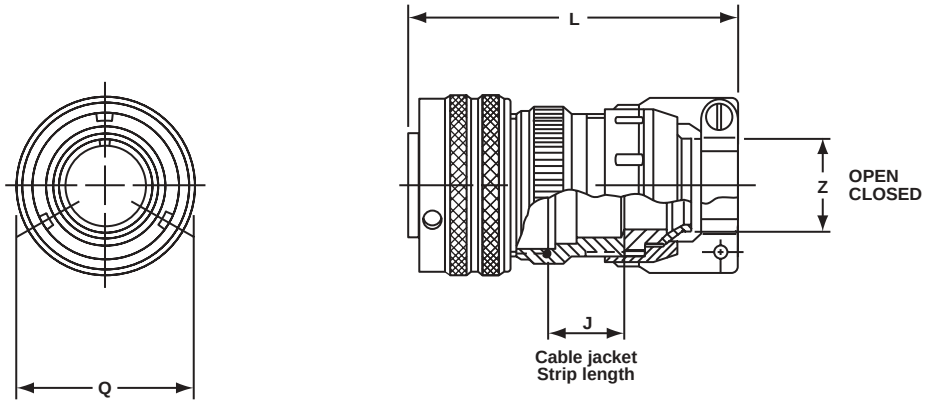


**Inches**

| Shell Size | J Approx. | L Approx. | Q Max. | Z | |
|---|---|---|---|---|---|
| | | | | Open | Closed |
| 10SL | .551 | 2.752 | .898 | .312 | .094 |
| 14S | .732 | 2.898 | 1.150 | .438 | .230 |
| 16S | .732 | 2.898 | 1.260 | .531 | .315 |
| 16 | .653 | 3.216 | 1.260 | .531 | .315 |
| 18 | .705 | 3.307 | 1.437 | .625 | .378 |
| 20 | .705 | 3.311 | 1.571 | .748 | .445 |
| 22 | .744 | 3.350 | 1.697 | .748 | .445 |
| 24 | .689 | 3.484 | 1.835 | .937 | .610 |
| 28 | .921 | 3.736 | 2.102 | .937 | .610 |
| 32 | 1.016 | 4.142 | 2.366 | 1.250 | .921 |
| 36 | 1.031 | 4.390 | 2.610 | 1.378 | .921 |
| 40 | 1.614 | 4.640 | 2.854 | 1.624 | 1.177 |

**Millimeters**

| Shell Size | J Approx. | L Approx. | Q Max. | Z | |
|---|---|---|---|---|---|
| | | | | Open | Closed |
| 10SL | 14.0 | 69.6 | 22.8 | 7.93 | 2.38 |
| 14S | 18.6 | 73.6 | 29.2 | 11.12 | 5.84 |
| 16S | 18.6 | 73.6 | 32.0 | 13.48 | 8.00 |
| 16 | 16.6 | 81.7 | 32.0 | 13.48 | 8.00 |
| 18 | 17.9 | 84.0 | 36.5 | 15.87 | 9.60 |
| 20 | 17.9 | 84.1 | 39.9 | 19.00 | 11.30 |
| 22 | 18.9 | 85.1 | 43.1 | 19.00 | 11.30 |
| 24 | 17.5 | 88.5 | 46.6 | 23.80 | 15.50 |
| 28 | 23.4 | 94.9 | 53.4 | 23.80 | 15.50 |
| 32 | 25.8 | 105.2 | 60.1 | 31.75 | 23.40 |
| 36 | 26.2 | 111.5 | 66.3 | 35.00 | 23.40 |
| 40 | 41.0 | 111.5 | 72.5 | 41.25 | 29.90 |

All dimensions for reference only.

# GT06CFGG
## straight plug

- **With rubber covered coupling nut for extreme shock applications**
- **The shrouded coupling nut protects the plug from damage**
- **Provides a superior gripping surface**
- **Seals the bayonet ramps**
- **Includes a backshell**
- **Mates with GT020RFSM (see page 44)**
- **Environment proof**

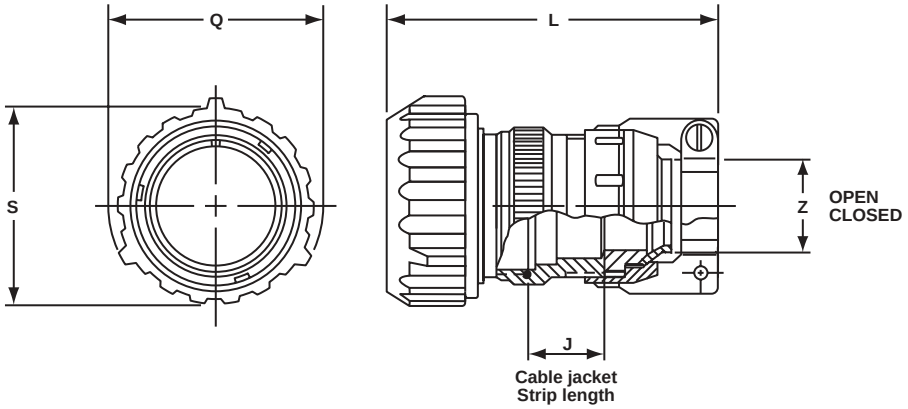


**Inches**

| Shell Size | J Approx. | L Approx. | Q Max. | S Dia. | Z | |
|---|---|---|---|---|---|---|
| | | | | | Open | Closed |
| 10SL | .551 | 3.150 | 1.319 | 1.122 | .312 | .094 |
| 18 | .701 | 3.346 | 1.929 | 1.713 | .625 | .378 |
| 20 | .705 | 3.937 | 2.028 | 1.811 | .748 | .445 |
| 22 | .705 | 3.937 | 2.224 | 1.988 | .748 | .445 |
| 24 | .689 | 4.016 | 2.362 | 2.126 | .937 | .610 |
| 28 | .921 | 4.291 | 2.638 | 2.402 | .937 | .610 |
| 32 | 1.016 | 5.315 | 2.992 | 2.661 | 1.250 | .921 |
| 36 | 1.031 | 5.039 | 3.240 | 2.925 | 1.378 | .921 |
| 40 | 1.614 | 5.315 | 3.465 | 3.150 | 1.624 | 1.177 |

**Millimeters**

| Shell Size | J Approx. | L Approx. | Q Max. | S Dia. | Z | |
|---|---|---|---|---|---|---|
| | | | | | Open | Closed |
| 10SL | 14.0 | 80 | 33.5 | 28.5 | 7.93 | 2.38 |
| 18 | 17.8 | 85 | 49.0 | 43.5 | 15.87 | 9.60 |
| 20 | 17.9 | 100 | 51.5 | 46.0 | 19.00 | 11.30 |
| 22 | 17.9 | 100 | 56.5 | 50.5 | 19.00 | 11.30 |
| 24 | 17.5 | 102 | 60.0 | 54.0 | 23.80 | 15.50 |
| 28 | 23.4 | 109 | 67.0 | 61.0 | 23.80 | 15.50 |
| 32 | 25.6 | 135 | 76.0 | 67.6 | 31.75 | 23.40 |
| 36 | 26.2 | 128 | 82.3 | 74.3 | 35.00 | 23.40 |
| 40 | 41.0 | 135 | 88.0 | 80.0 | 41.25 | 29.90 |

All dimensions for reference only.

# GT06G
## straight plug

- **With a wire sealing grommet**
- **For use with individual wires**
- **Includes a backshell for use with heat-shrink tubing**
- **Environment proof**

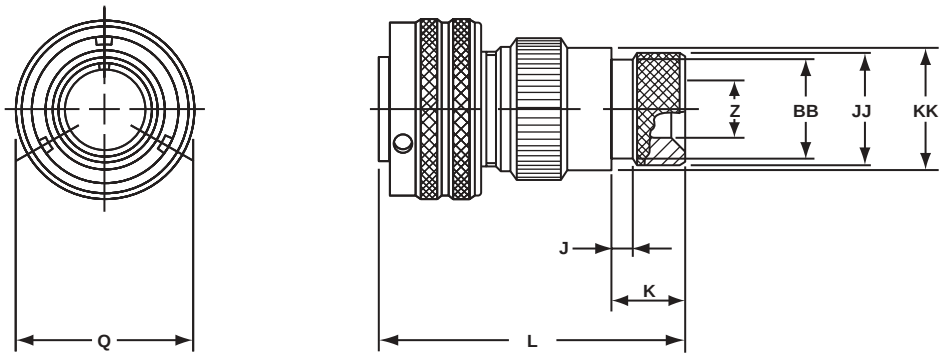


**Inches**

| Shell Size | J ± .008 | K ± .020 | L Max. | Q Max. | Z Min. | BB Max. | JJ ± .008 | KK ± .008 |
|---|---|---|---|---|---|---|---|---|
| 10SL | .138 | .461 | 1.969 | .898 | .303 | .524 | .610 | .669 |
| 14S | .138 | .461 | 1.969 | 1.150 | .417 | .669 | .752 | .791 |
| 16S | .138 | .461 | 1.969 | 1.260 | .531 | .862 | .941 | .925 |
| 16 | .138 | .453 | 2.362 | 1.260 | .531 | .862 | .941 | .925 |
| 18 | .138 | .453 | 2.362 | 1.437 | .575 | .862 | .941 | 1.043 |
| 20 | .138 | .500 | 2.559 | 1.571 | .736 | 1.031 | 1.165 | 1.189 |
| 22 | .138 | .500 | 2.559 | 1.697 | .819 | 1.031 | 1.165 | 1.323 |
| 24 | .138 | .500 | 2.559 | 1.835 | .969 | 1.358 | 1.488 | 1.421 |
| 28 | .138 | .500 | 2.559 | 2.102 | 1.063 | 1.358 | 1.488 | 1.630 |
| 32 | .138 | .598 | 2.756 | 2.366 | 1.311 | 1.717 | 1.882 | 1.913 |
| 36 | .138 | .598 | 3.150 | 2.610 | 1.516 | 1.717 | 1.882 | 2.157 |
| 40 | .138 | .610 | 3.150 | 2.854 | 1.898 | 2.071 | 2.276 | 2.402 |

**Millimeters**

| Shell Size | J ± 0.2 | K ± 0.5 | L Max. | Q Max. | Z Min. | BB Max. | JJ ± 0.2 | KK ± 0.2 |
|---|---|---|---|---|---|---|---|---|
| 10SL | 3.5 | 11.7 | 50 | 22.8 | 7.7 | 13.3 | 15.5 | 17.0 |
| 14S | 3.5 | 11.7 | 50 | 29.2 | 10.6 | 17.0 | 19.1 | 20.1 |
| 16S | 3.5 | 11.7 | 50 | 32.0 | 13.5 | 21.9 | 23.9 | 23.5 |
| 16 | 3.5 | 11.5 | 60 | 32.0 | 13.5 | 21.9 | 23.9 | 23.5 |
| 18 | 3.5 | 11.5 | 60 | 36.5 | 14.6 | 21.9 | 23.9 | 26.5 |
| 20 | 3.5 | 12.7 | 65 | 39.9 | 18.7 | 26.2 | 29.6 | 30.2 |
| 22 | 3.5 | 12.7 | 65 | 43.1 | 20.8 | 26.2 | 29.6 | 33.6 |
| 24 | 3.5 | 12.7 | 65 | 46.6 | 24.6 | 34.5 | 37.8 | 36.1 |
| 28 | 3.5 | 12.7 | 65 | 53.4 | 27.0 | 34.5 | 37.8 | 41.4 |
| 32 | 3.5 | 15.2 | 70 | 60.1 | 33.3 | 43.6 | 47.8 | 48.6 |
| 36 | 3.5 | 15.2 | 80 | 66.3 | 38.5 | 43.6 | 47.8 | 54.8 |
| 40 | 3.5 | 15.2 | 80 | 72.5 | 48.2 | 52.6 | 57.8 | 61.0 |

All dimensions for reference only.

# GT06G2
## straight plug

- **For use with individual wires and termination of heat shrink tubing**
- **With individual wire sealing grommet**
- **Backshell includes free spinning adapter**
- **Environment proof**

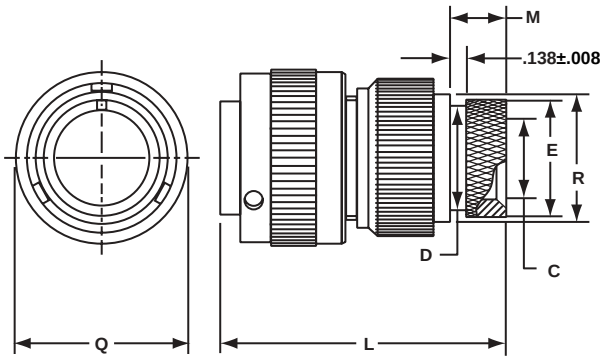


**Inches**

| Shell Size | C Min. | D Max. | E ±.008 | L Max. | M ±.020 | Q Max. | R ±.007 |
|---|---|---|---|---|---|---|---|
| 10SL | .303 | .524 | .610 | 1.969 | .461 | .898 | .669 |
| 14S | .417 | .669 | .752 | 1.969 | .461 | 1.150 | .791 |
| 16S | .531 | .862 | .941 | 1.969 | .461 | 1.299 | .925 |
| 16 | .531 | .862 | .941 | 2.362 | .453 | 1.299 | .925 |
| 18 | .637 | .862 | .941 | 2.362 | .453 | 1.437 | 1.043 |
| 20 | .736 | 1.031 | 1.165 | 2.559 | .500 | 1.571 | 1.189 |
| 22 | .877 | 1.031 | 1.165 | 2.559 | .500 | 1.697 | 1.323 |
| 24 | .969 | 1.358 | 1.488 | 2.559 | .500 | 1.835 | 1.421 |
| 28 | 1.094 | 1.358 | 1.488 | 2.559 | .500 | 2.102 | 1.630 |
| 32 | 1.392 | 1.717 | 1.882 | 2.756 | .598 | 2.366 | 1.913 |
| 36 | 1.539 | 1.717 | 1.882 | 3.150 | .598 | 2.610 | 2.157 |
| 40 | 1.898 | 2.071 | 2.276 | 3.150 | .610 | 2.850 | 2.402 |

**Millimeters**

| Shell Size | C Min. | D Max. | E ±.008 | L Max. | M ±.020 | Q Max. | R ±.007 |
|---|---|---|---|---|---|---|---|
| 10SL | 7.7 | 13.3 | 15.5 | 50.0 | 11.7 | 22.8 | 17.0 |
| 14S | 10.6 | 17.0 | 19.1 | 50.0 | 11.7 | 29.2 | 20.1 |
| 16S | 13.5 | 21.9 | 23.9 | 50.0 | 11.7 | 32.0 | 23.5 |
| 16 | 13.5 | 21.9 | 23.9 | 60.0 | 11.5 | 32.0 | 23.5 |
| 18 | 16.2 | 21.9 | 23.9 | 60.0 | 11.5 | 36.5 | 26.5 |
| 20 | 18.7 | 26.2 | 29.6 | 65.0 | 12.7 | 39.9 | 30.2 |
| 22 | 22.3 | 26.2 | 29.6 | 65.0 | 12.7 | 43.1 | 33.6 |
| 24 | 24.6 | 34.5 | 37.8 | 65.0 | 12.7 | 46.6 | 36.0 |
| 28 | 27.8 | 34.5 | 37.8 | 65.0 | 12.7 | 53.4 | 41.4 |
| 32 | 35.4 | 43.6 | 47.8 | 70.0 | 15.2 | 60.1 | 48.6 |
| 36 | 39.1 | 43.6 | 47.8 | 80.0 | 15.2 | 66.3 | 54.8 |
| 40 | 48.2 | 52.6 | 57.8 | 80.0 | 15.5 | 72.5 | 61.0 |

All dimensions for reference only.

# GT06LC
straight plug

- **Includes a backshell with a basket weave strain relief cord grip**
- **Environment proof**

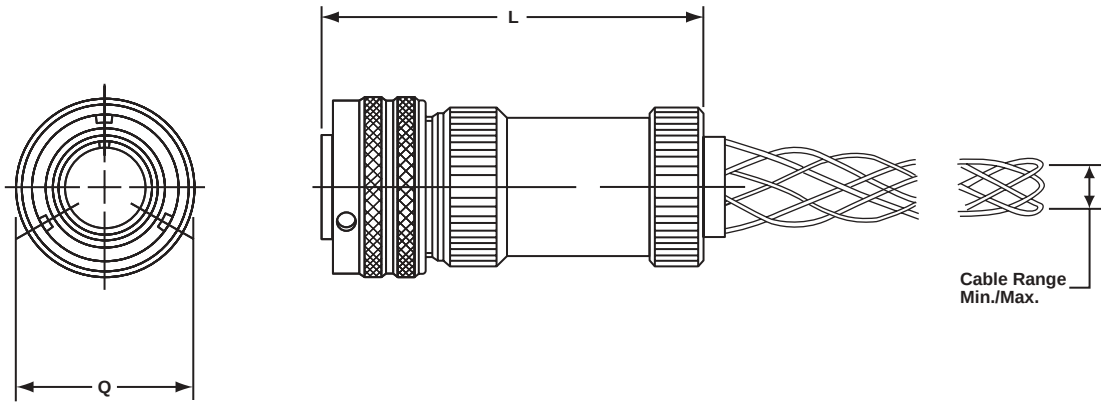


**Inches**

| Shell Size | L Ref. | Q Max. |
|---|---|---|
| 10SL | 3.000 | .898 |
| 14S | 3.000 | 1.150 |
| 16S | 3.000 | 1.260 |
| 16 | 3.250 | 1.260 |
| 18 | 3.250 | 1.437 |
| 20 | 3.250 | 1.571 |
| 22 | 3.250 | 1.697 |
| 24 | 3.250 | 1.835 |
| 28 | 3.600 | 2.102 |
| 32 | 3.600 | 2.366 |
| 36 | 3.600 | 2.610 |
| 40 | 3.600 | 2.854 |

| Cable Range | | |
|---|---|---|
| AXX Part No. Suffix* | Min. | Max. |
| A16 | .250 | .375 |
| A54 | .375 | .500 |
| A10 | .500 | .625 |
| A12 | .625 | .750 |
| A42 | .750 | .875 |
| A11 | .875 | 1.000 |
| A55 | 1.000 | 1.125 |
| A14 | 1.125 | 1.250 |
| A56 | 1.250 | 1.375 |
| A74 | 1.375 | 1.500 |
| A57 | 1.500 | 1.625 |
| A58 | 1.625 | 1.750 |

**Millimeters**

| Shell Size | L Ref. | Q Max. |
|---|---|---|
| 10SL | 76.2 | 22.8 |
| 14S | 76.2 | 29.2 |
| 16S | 76.2 | 32.0 |
| 16 | 82.5 | 32.0 |
| 18 | 82.5 | 36.4 |
| 20 | 82.5 | 39.9 |
| 22 | 82.5 | 43.1 |
| 24 | 82.5 | 46.6 |
| 28 | 91.4 | 53.3 |
| 32 | 91.4 | 60.0 |
| 36 | 91.4 | 66.2 |
| 40 | 91.4 | 72.4 |

| Cable Range | | |
|---|---|---|
| AXX Part No. Suffix* | Min. | Max. |
| A16 | 6.3 | 9.5 |
| A54 | 9.5 | 12.7 |
| A10 | 12.7 | 15.8 |
| A12 | 15.8 | 19.0 |
| A42 | 19.0 | 22.2 |
| A11 | 22.2 | 25.4 |
| A55 | 25.4 | 28.5 |
| A14 | 28.5 | 31.7 |
| A56 | 31.7 | 34.9 |
| A74 | 34.9 | 38.1 |
| A57 | 38.1 | 41.2 |
| A58 | 41.2 | 44.4 |

All dimensions for reference only.

* For example, typical part number would be: GTC06LC28-8PA59

# GT06LCF/06LCFZ
## straight plug

**GT06LCF**
- **With cable clamp and seal**
- **Long backshell provides more working room for jacketed cable**
- **Environment proof**

**GT06LCFZ**
- **Same as GT06LCF except: Individual wire sealing grommet for added moisture protection**
- **Environment proof**

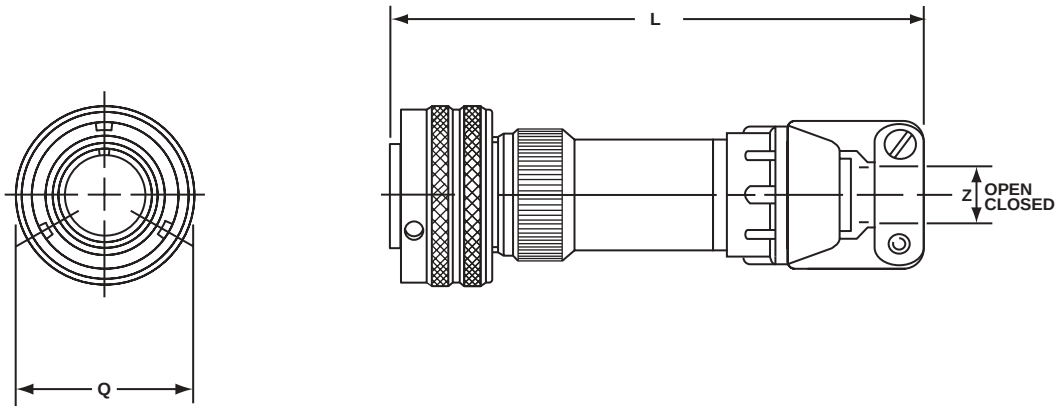


**Inches**

| Shell Size | L Approx. | Q Max. | Z | |
|---|---|---|---|---|
| | | | Open | Closed |
| 10SL | 3.811 | .898 | .312 | .094 |
| 14S | 3.843 | 1.150 | .438 | .230 |
| 16S | 3.843 | 1.260 | .531 | .315 |
| 16 | 4.217 | 1.260 | .531 | .315 |
| 18 | 4.409 | 1.437 | .625 | .378 |
| 20 | 4.409 | 1.571 | .748 | .445 |
| 22 | 4.413 | 1.697 | .748 | .445 |
| 24 | 4.535 | 1.835 | .937 | .610 |
| 28 | 4.756 | 2.102 | .937 | .610 |
| 32 | 5.079 | 2.366 | 1.250 | .921 |
| 36 | 5.327 | 2.610 | 1.378 | .921 |
| 40 | 5.327 | 2.854 | 1.624 | 1.177 |

**Millimeters**

| Shell Size | L Approx. | Q Max. | Z | |
|---|---|---|---|---|
| | | | Open | Closed |
| 10SL | 96.8 | 22.8 | 7.93 | 2.38 |
| 14S | 97.6 | 29.2 | 11.12 | 5.84 |
| 16S | 97.6 | 32.0 | 13.48 | 8.00 |
| 16 | 107.1 | 32.0 | 13.48 | 8.00 |
| 18 | 112.0 | 36.5 | 15.87 | 9.60 |
| 20 | 112.0 | 39.9 | 19.00 | 11.30 |
| 22 | 112.1 | 43.1 | 19.00 | 11.30 |
| 24 | 115.2 | 46.6 | 23.80 | 15.50 |
| 28 | 120.8 | 53.4 | 23.80 | 15.50 |
| 32 | 129.0 | 60.1 | 31.75 | 23.40 |
| 36 | 135.3 | 66.3 | 35.00 | 23.40 |
| 40 | 135.3 | 72.5 | 41.25 | 29.90 |

All dimensions for reference only.

# GT06LT
## straight plug

- **For termination of metallic core conduit**
- **With individual wire sealing grommet**
- **Environment proof**

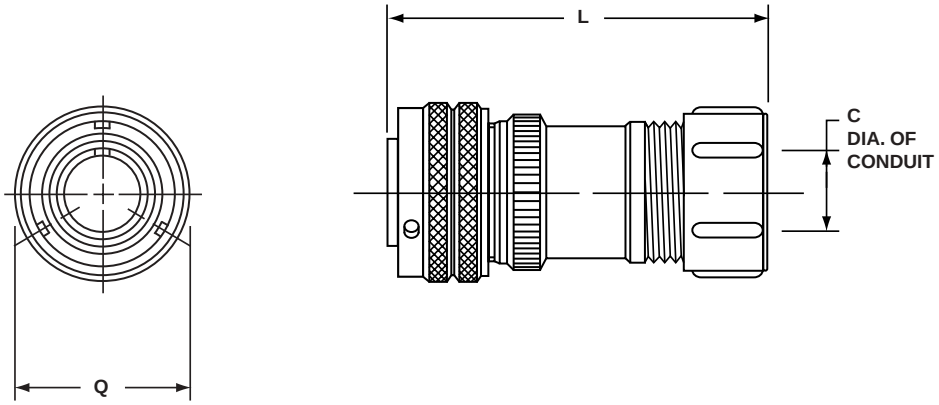


**Inches**

| Shell Size | L Max. | Q Max. |
|---|---|---|
| 10SL | Dependent on Conduit and Shell Combination<br><br>Consult Amphenol, Sidney, NY for further information | .898 |
| 14S | | 1.150 |
| 16S | | 1.299 |
| 16 | | 1.299 |
| 18 | | 1.437 |
| 20 | | 1.571 |
| 22 | | 1.697 |
| 24 | | 1.835 |
| 28 | | 2.102 |
| 32 | | 2.366 |
| 36 | | 2.610 |
| 40 | | 2.850 |

**Inches**

| C Conduit Size |
|---|
| 3/8 |
| 1/2 |
| 3/4 |
| 1 |
| 1-1/4 |
| 1-1/2 |
| 2 |

**Millimeters**

| Shell Size | L Max. | Q Max. |
|---|---|---|
| 10SL | Dependent on Conduit and Shell Combination<br><br>Consult Amphenol, Sidney, NY for further information | 22.81 |
| 14S | | 29.21 |
| 16S | | 32.99 |
| 16 | | 32.99 |
| 18 | | 36.50 |
| 20 | | 39.90 |
| 22 | | 43.10 |
| 24 | | 46.61 |
| 28 | | 53.39 |
| 32 | | 60.10 |
| 36 | | 66.29 |
| 40 | | 72.39 |

All dimensions for reference only.

# GT06PFC
## straight plug

- **For termination of plastic flexible corrugated conduit**
- **With individual wire sealing grommet**
- **Environment proof**

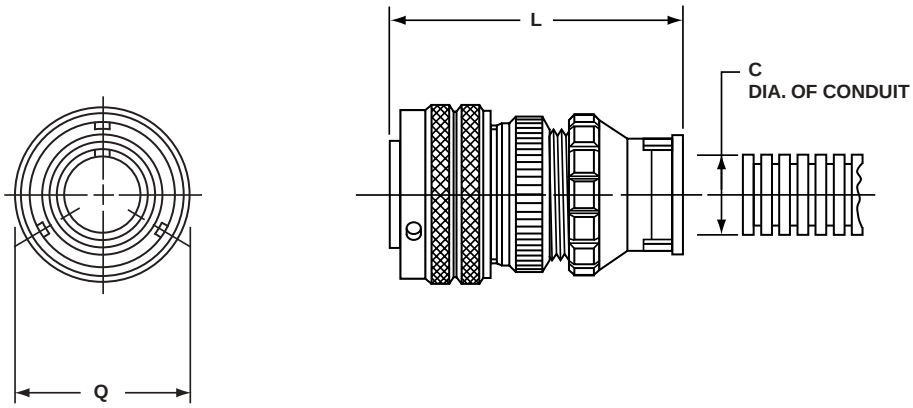


**Inches**

| Shell Size | C Conduit Size | L Max. | Q Max. |
|---|---|---|---|
| 10SL | Wide Variety of Sizes<br><br>Consult Amphenol, Sidney, NY for further information | Dependent on Conduit and Shell Combination<br><br>Consult Amphenol, Sidney, NY for further information | .898 |
| 14S | | | 1.150 |
| 16S | | | 1.299 |
| 16 | | | 1.299 |
| 18 | | | 1.437 |
| 20 | | | 1.571 |
| 22 | | | 1.697 |
| 24 | | | 1.835 |
| 28 | | | 2.102 |
| 32 | | | 2.366 |
| 36 | | | 2.610 |
| 40 | | | 2.850 |

**Millimeters**

| Shell Size | C Conduit Size | L Max. | Q Max. |
|---|---|---|---|
| 10SL | Wide Variety of Sizes<br><br>Consult Amphenol, Sidney, NY for further information | Dependent on Conduit and Shell Combination<br><br>Consult Amphenol, Sidney, NY for further information | 22.81 |
| 14S | | | 29.21 |
| 16S | | | 32.99 |
| 16 | | | 32.99 |
| 18 | | | 36.50 |
| 20 | | | 39.90 |
| 22 | | | 43.10 |
| 24 | | | 46.61 |
| 28 | | | 53.39 |
| 32 | | | 60.10 |
| 36 | | | 66.29 |
| 40 | | | 72.39 |

All dimensions for reference only.

# GT06PG
straight plug

- **Long adapter with internal PG thread**
- **With wire sealing grommet**
- **Environment proof**

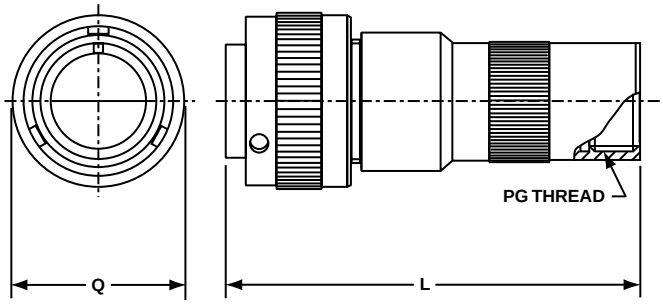


**Inches**

| Shell Size | PG* Thread | L Ref. | Q Max. |
|---|---|---|---|
| 10SL | 7 | 2.873 | .898 |
| 14S | 9 | 2.904 | 1.150 |
| 16S | 11 | 2.904 | 1.299 |
| 16 | 11 | 3.291 | 1.299 |
| 18 | 13.5 | 3.406 | 1.437 |
| 20 | 16 | 3.391 | 1.571 |
| 22 | 21 | 3.395 | 1.697 |
| 24 | 21 | 3.470 | 1.835 |
| 28 | 29 | 3.604 | 2.102 |
| 32 | 36 | 3.751 | 2.366 |
| 36 | 42 | 3.795 | 2.610 |
| 40 | 48 | 3.795 | 2.850 |

**Millimeters**

| Shell Size | PG* Thread | L Ref. | Q Max. |
|---|---|---|---|
| 10SL | 7 | 73.0 | 22.8 |
| 14S | 9 | 73.8 | 29.2 |
| 16S | 11 | 73.8 | 32.0 |
| 16 | 11 | 83.6 | 32.0 |
| 18 | 13.5 | 86.5 | 36.5 |
| 20 | 16 | 86.1 | 39.9 |
| 22 | 21 | 86.2 | 43.1 |
| 24 | 21 | 88.1 | 46.6 |
| 28 | 29 | 91.5 | 53.4 |
| 32 | 36 | 95.3 | 60.1 |
| 36 | 42 | 96.4 | 66.3 |
| 40 | 48 | 96.4 | 72.5 |

All dimensions for reference only.
Additional shell size/PG thread combinations available

# GT06PP/064PP
panel plug

**GT06PP**
- **Square flange mounting with four through holes**
- **Environment proof with proper panel sealing gasket (see page 79)**

**GT064PP**
- **Square flange mounting with four through holes**
- **Environment proof with proper panel sealing gasket (see page 79)**
- **Includes a heavy duty coupling nut**

**GT06PP**

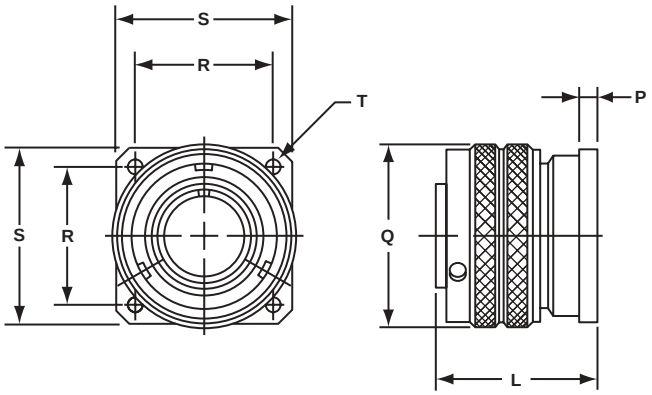


**GT064PP**

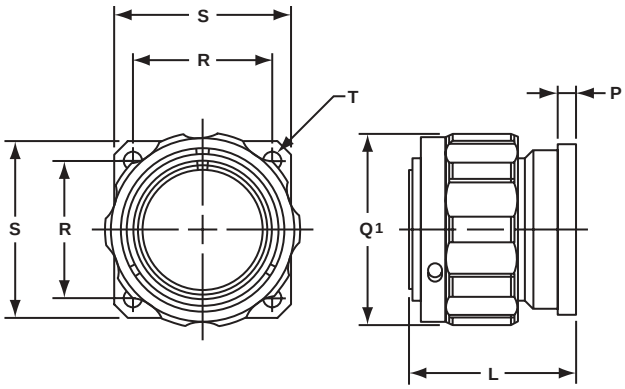


**Inches**

| Shell Size | L Approx. | Q Max. | Q[1] Max. | P ± .008 | R ± .004 | S ± .012 | T + .004 – .000 |
|---|---|---|---|---|---|---|---|
| 10SL | 1.087 | .898 | .953 | .110 | .717 | 1.000 | .126 |
| 14S | 1.091 | 1.150 | 1.208 | .126 | .906 | 1.181 | .126 |
| 16S | 1.091 | 1.260 | 1.319 | .126 | .969 | 1.280 | .126 |
| 16 | 1.469 | 1.260 | 1.319 | .126 | .969 | 1.280 | .126 |
| 18 | 1.500 | 1.437 | 1.510 | .157 | 1.063 | 1.378 | .126 |
| 20 | 1.500 | 1.571 | 1.660 | .157 | 1.157 | 1.496 | .126 |
| 22 | 1.500 | 1.697 | 1.770 | .157 | 1.252 | 1.614 | .126 |
| 24 | 1.598 | 1.835 | 1.910 | .157 | 1.374 | 1.752 | .146 |
| 28 | 1.626 | 2.102 | 2.085 | .157 | 1.563 | 2.000 | .146 |
| 32 | 1.764 | 2.366 | 2.440 | .157 | 1.752 | 2.244 | .169 |
| 36 | 1.764 | 2.610 | 2.660 | .157 | 1.937 | 2.500 | .169 |
| 40 | 1.764 | 2.850 | 2.910 | .157 | 2.185 | 2.752 | .169 |

| Shell Size | L Approx. | Q Max. | Q[1] Max. | P ± 0.2 | R ± 0.1 | S ± 0.3 | T + 0.1 – 0.0 |
|---|---|---|---|---|---|---|---|
| 10SL | 27.6 | 22.8 | 24.2 | 2.8 | 18.2 | 25.4 | 3.2 |
| 14S | 27.7 | 29.2 | 30.6 | 3.2 | 23.0 | 30.0 | 3.2 |
| 16S | 27.7 | 32.0 | 33.5 | 3.2 | 24.6 | 32.5 | 3.2 |
| 16 | 37.3 | 32.0 | 33.5 | 3.2 | 24.6 | 32.5 | 3.2 |
| 18 | 38.1 | 36.5 | 38.3 | 4.0 | 27.0 | 35.0 | 3.2 |
| 20 | 38.1 | 39.9 | 42.1 | 4.0 | 29.4 | 38.0 | 3.2 |
| 22 | 38.1 | 43.1 | 44.9 | 4.0 | 31.8 | 41.0 | 3.2 |
| 24 | 40.6 | 46.6 | 48.5 | 4.0 | 34.9 | 44.5 | 3.7 |
| 28 | 41.3 | 53.4 | 52.9 | 4.0 | 39.7 | 50.8 | 3.7 |
| 32 | 44.8 | 60.1 | 61.9 | 4.0 | 44.5 | 57.0 | 4.3 |
| 36 | 44.8 | 66.3 | 67.5 | 4.0 | 49.2 | 63.5 | 4.3 |
| 40 | 44.8 | 72.4 | 73.9 | 4.0 | 55.5 | 69.9 | 4.3 |

All dimensions for reference only.

# GT06R
## straight plug

- **With a wire sealing grommet**
- **Includes a backshell for conduit termination**
- **Environment proof**

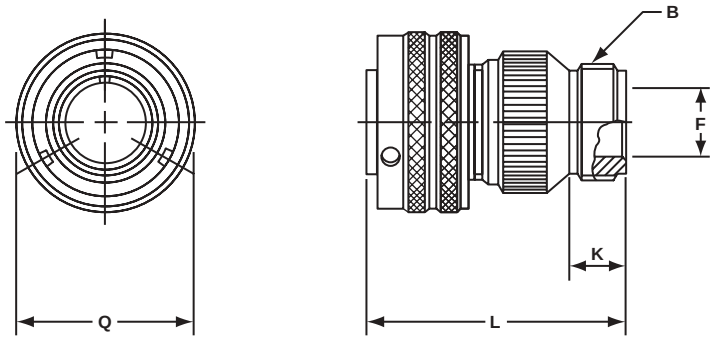


**Inches**

| Shell Size | B Thread Class 2A | F Min. | K Min. | L Max. | Q Max. |
|---|---|---|---|---|---|
| 10SL | .6250-24UNEF | .409 | .374 | 1.969 | .898 |
| 14S | .7500-20UNEF | .520 | .374 | 1.969 | 1.150 |
| 16S | .8750-20UNEF | .638 | .374 | 1.969 | 1.260 |
| 16 | .8750-20UNEF | .638 | .374 | 2.362 | 1.260 |
| 18 | 1.0000-20UNEF | .756 | .374 | 2.362 | 1.437 |
| 20 | 1.1875-18UNEF | .867 | .374 | 2.362 | 1.571 |
| 22 | 1.1875-18UNEF | .965 | .374 | 2.362 | 1.697 |
| 24 | 1.4375-18UNEF | 1.094 | .374 | 2.560 | 1.835 |
| 28 | 1.4375-18UNEF | 1.228 | .374 | 2.560 | 2.102 |
| 32 | 1.7500-18UNS | 1.488 | .433 | 2.560 | 2.366 |
| 36 | 2.0000-18UNS | 1.780 | .465 | 3.150 | 2.610 |
| 40 | 2.2500-16UN | 2.016 | .465 | 3.150 | 2.850 |

**Millimeters**

| Shell Size | F Min. | K Min. | L Max. | Q Max. |
|---|---|---|---|---|
| 10SL | 10.4 | 9.5 | 50 | 22.8 |
| 14S | 13.2 | 9.5 | 50 | 29.2 |
| 16S | 16.2 | 9.5 | 50 | 32.0 |
| 16 | 16.2 | 9.5 | 60 | 32.0 |
| 18 | 19.2 | 9.5 | 60 | 36.5 |
| 20 | 22.0 | 9.5 | 60 | 39.9 |
| 22 | 24.5 | 9.5 | 60 | 43.1 |
| 24 | 27.8 | 9.5 | 65 | 46.6 |
| 28 | 31.2 | 9.5 | 65 | 53.4 |
| 32 | 37.8 | 11.0 | 65 | 60.1 |
| 36 | 45.2 | 11.8 | 80 | 66.3 |
| 40 | 51.2 | 11.8 | 80 | 72.4 |

All dimensions for reference only.

# GT06RV
## straight plug

- **With a wire sealing grommet**
- **For use with individual wires**
- **Environment proof**

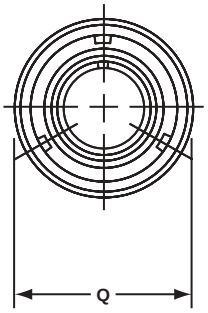


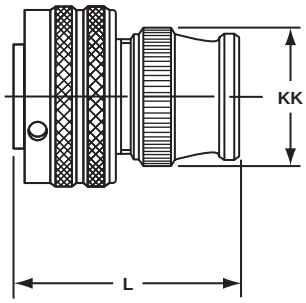


**Inches**

| Shell Size | L Max. | Q Max. | KK Max. |
|---|---|---|---|
| 10SL | 1.417 | .898 | .787 |
| 14S | 1.437 | 1.150 | .945 |
| 16S | 1.437 | 1.260 | 1.024 |
| 16 | 1.929 | 1.260 | 1.024 |
| 18 | 1.929 | 1.437 | 1.161 |
| 20 | 1.969 | 1.571 | 1.299 |
| 22 | 1.969 | 1.697 | 1.417 |
| 24 | 2.008 | 1.835 | 1.543 |
| 28 | 2.008 | 2.102 | 1.811 |
| 32 | 2.087 | 2.366 | 2.028 |
| 36 | 2.106 | 2.610 | 2.283 |
| 40 | 2.126 | 2.850 | 2.539 |

**Millimeters**

| Shell Size | L Max. | Q Max. | KK Max. |
|---|---|---|---|
| 10SL | 36.0 | 22.8 | 20.0 |
| 14S | 36.5 | 29.2 | 24.0 |
| 16S | 36.5 | 32.0 | 26.0 |
| 16 | 49.0 | 32.0 | 26.0 |
| 18 | 49.0 | 36.5 | 29.5 |
| 20 | 50.0 | 39.9 | 33.0 |
| 22 | 50.0 | 43.1 | 36.0 |
| 24 | 51.0 | 46.6 | 40.0 |
| 28 | 51.0 | 53.4 | 46.0 |
| 32 | 53.0 | 60.1 | 51.5 |
| 36 | 53.5 | 66.3 | 58.0 |
| 40 | 54.0 | 72.4 | 64.5 |

All dimensions for reference only.

# GT06SB
## straight plug

- **For termination of shielded braid and heatshrink tube or boot.**
- **With individual wire sealing grommet**
- **Environment proof**

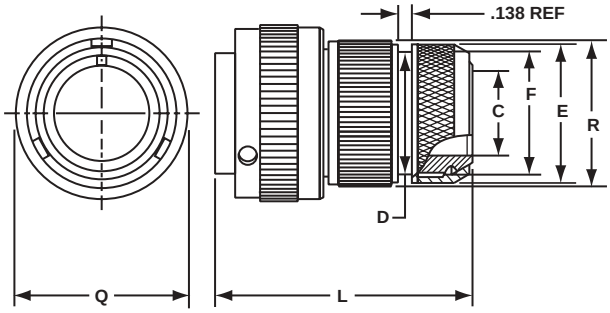


**Inches**

| Shell Size | C Min. | D Max. | E Max. | F Ref. | L Ref. | Q Max. | R Max. |
|---|---|---|---|---|---|---|---|
| 10SL | .303 | .641 | .775 | .625 | 2.034 | .898 | .786 |
| 14S | .417 | .786 | .873 | .750 | 2.049 | 1.150 | .944 |
| 16S | .531 | .905 | 1.025 | .875 | 2.049 | 1.299 | 1.023 |
| 16 | .531 | .905 | 1.025 | .875 | 2.505 | 1.299 | 1.023 |
| 18 | .637 | .965 | 1.147 | 1.000 | 2.552 | 1.437 | 1.160 |
| 20 | .736 | 1.122 | 1.305 | 1.125 | 2.552 | 1.571 | 1.296 |
| 22 | .819 | 1.196 | 1.373 | 1.250 | 2.418 | 1.697 | 1.416 |
| 24 | .981 | 1.364 | 1.521 | 1.375 | 2.632 | 1.835 | 1.562 |
| 28 | 1.067 | 1.476 | 1.657 | 1.500 | 2.566 | 2.102 | 1.806 |
| 32 | 1.311 | 1.732 | 1.927 | 1.750 | 2.628 | 2.366 | 2.027 |
| 36 | 1.631 | 2.007 | 2.207 | 2.062 | 2.676 | 2.610 | 2.281 |
| 40 | 1.882 | 2.283 | 2.486 | 2.312 | 2.628 | 2.850 | 2.538 |

**Millimeters**

| Shell Size | C Min. | D Max. | E Max. | F Ref. | L Ref. | Q Max. | R Max. |
|---|---|---|---|---|---|---|---|
| 10SL | 7.7 | 16.3 | 19.7 | 15.9 | 51.7 | 22.8 | 20.0 |
| 14S | 10.6 | 20.0 | 22.2 | 19.1 | 52.0 | 29.2 | 24.0 |
| 16S | 13.5 | 23.0 | 26.0 | 22.2 | 52.0 | 32.0 | 26.0 |
| 16 | 13.5 | 23.0 | 26.0 | 22.2 | 63.6 | 32.0 | 26.0 |
| 18 | 16.2 | 24.5 | 29.1 | 25.4 | 64.8 | 36.5 | 29.5 |
| 20 | 18.7 | 28.5 | 33.1 | 28.6 | 64.8 | 39.9 | 32.9 |
| 22 | 20.8 | 30.4 | 34.9 | 31.8 | 61.4 | 43.1 | 36.0 |
| 24 | 24.9 | 34.6 | 38.6 | 34.9 | 66.8 | 46.6 | 39.7 |
| 28 | 27.1 | 37.5 | 42.5 | 38.1 | 65.2 | 53.4 | 45.9 |
| 32 | 33.3 | 44.0 | 48.9 | 44.5 | 66.8 | 60.1 | 51.5 |
| 36 | 41.4 | 51.0 | 56.1 | 52.4 | 68.0 | 66.3 | 57.9 |
| 40 | 47.8 | 58.0 | 63.1 | 58.7 | 66.8 | 72.5 | 64.5 |

All dimensions for reference only.

# GT06SBT
## straight plug

- **For termination of shielded braid and heatshrink tube or boot**
- **With wire sealing grommet**
- **Environment proof**

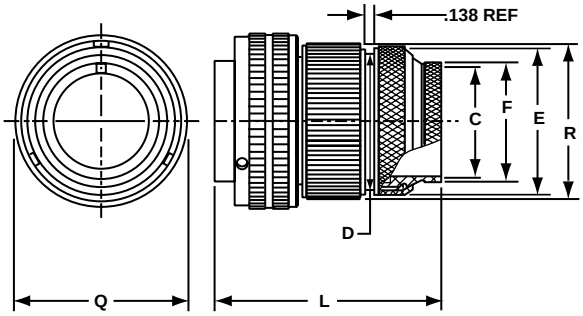


**Inches**

| Shell Size | C Min. | D Max. | E Max. | F Ref. | L Ref. | Q Max. | R Max. |
|---|---|---|---|---|---|---|---|
| 10SL | .303 | .641 | .775 | .437 | 2.401 | .898 | .786 |
| 14S | .417 | .768 | .873 | .563 | 2.520 | 1.150 | .944 |
| 16S | .531 | .905 | 1.025 | .626 | 2.756 | 1.299 | 1.023 |
| 16 | .531 | .905 | 1.025 | .626 | 3.150 | 1.299 | 1.023 |
| 18 | .637 | .965 | 1.147 | .752 | 3.150 | 1.437 | 1.160 |
| 20 | .736 | 1.122 | 1.305 | .878 | 3.150 | 1.571 | 1.296 |
| 22 | .819 | 1.196 | 1.373 | 1.000 | 3.150 | 1.697 | 1.416 |
| 24 | .981 | 1.364 | 1.521 | 1.126 | 3.150 | 1.835 | 1.562 |
| 28 | 1.067 | 1.476 | 1.657 | 1.252 | 3.150 | 2.102 | 1.806 |
| 32 | 1.311 | 1.732 | 1.927 | 1.252 | 3.150 | 2.366 | 2.027 |
| 36 | 1.631 | 2.007 | 2.207 | 1.752 | 3.350 | 2.610 | 2.281 |
| 40 | 1.882 | 2.283 | 2.486 | 2.000 | 3.350 | 2.850 | 2.538 |

**Millimeters**

| Shell Size | C Min. | D Max. | E Max. | F Ref. | L Ref. | Q Max. | R Max. |
|---|---|---|---|---|---|---|---|
| 10SL | 7.7 | 16.3 | 19.7 | 11.1 | 61.0 | 22.8 | 20.0 |
| 14S | 10.6 | 20.0 | 22.2 | 14.3 | 64.0 | 29.2 | 24.0 |
| 16S | 13.5 | 23.0 | 26.0 | 15.9 | 71.0 | 32.0 | 26.0 |
| 16 | 13.5 | 23.0 | 26.0 | 15.9 | 80.0 | 32.0 | 26.0 |
| 18 | 16.2 | 24.5 | 29.1 | 19.1 | 80.0 | 36.5 | 29.5 |
| 20 | 18.7 | 28.5 | 33.1 | 22.3 | 80.0 | 39.9 | 32.9 |
| 22 | 20.8 | 30.4 | 34.9 | 25.4 | 80.0 | 43.1 | 36.0 |
| 24 | 24.9 | 34.6 | 38.6 | 28.6 | 80.0 | 46.6 | 39.7 |
| 28 | 27.1 | 37.5 | 42.5 | 31.8 | 80.0 | 53.4 | 45.9 |
| 32 | 33.3 | 44.0 | 48.9 | 31.8 | 80.0 | 60.1 | 51.5 |
| 36 | 41.4 | 51.0 | 56.1 | 44.5 | 85.1 | 66.3 | 57.9 |
| 40 | 47.8 | 58.0 | 63.1 | 50.8 | 85.1 | 72.5 | 64.5 |

All dimensions for reference only.

# GT065SL(*)
## straight plug

- **Includes a long heavy duty coupling nut**
- **Includes a liquid tight strain relief to grip and seal jacketed cable**
- **Environment proof**

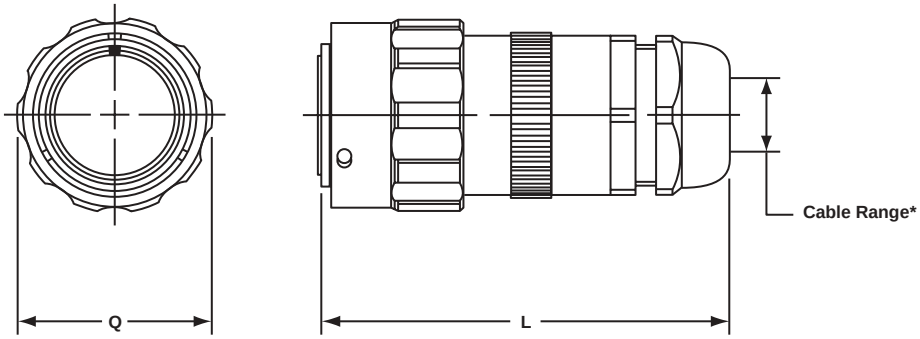


**Inches**

| Shell Size | L Ref. | Q Max. | Cable Range (1)* | Cable Range (2)* |
|---|---|---|---|---|
| 10SL | 3.516 | 1.007 | .11–.26 | .07–.12 |
| 14S | 3.628 | 1.259 | .15–.32 | .07–.24 |
| 16S | 3.808 | 1.410 | .19–.39 | .11–.28 |
| 16 | 4.355 | 1.410 | .19–.39 | .11–.28 |
| 18 | 4.249 | 1.547 | .23–.47 | .19–.35 |
| 20 | 4.255 | 1.681 | .39–.56 | .27–.47 |
| 22 | 4.329 | 1.847 | .51–.71 | .35–.63 |
| 24 | 4.816 | 1.965 | .51–.71 | .35–.63 |
| 28 | 4.817 | 2.222 | .70–.98 | .51–.79 |
| 32 | 4.817 | 2.482 | .86–1.26 | .78–1.02 |
| 36 | 5.048 | 2.721 | 1.26–1.50 | .98–1.22 |
| 40 | 4.978 | 2.953 | 1.45–1.75 | 1.14–1.38 |

**Millimeters**

| Shell Size | L Ref. | Q Max. | Cable Range (1)* | Cable Range (2)* |
|---|---|---|---|---|
| 10SL | 89.3 | 25.5 | 2.7–6.6 | 1.7–3.0 |
| 14S | 92.1 | 31.9 | 3.8–8.1 | 1.7–6.0 |
| 16S | 96.7 | 35.8 | 4.8–9.9 | 2.7–7.1 |
| 16 | 110.6 | 35.8 | 4.8–9.9 | 2.7–7.1 |
| 18 | 107.9 | 39.2 | 5.8–11.9 | 4.8–8.8 |
| 20 | 108.0 | 42.6 | 9.9–14.2 | 6.8–11.9 |
| 22 | 109.9 | 46.9 | 12.9–18.0 | 8.8–16.0 |
| 24 | 122.3 | 49.9 | 12.9–18.0 | 8.8–16.0 |
| 28 | 122.3 | 56.4 | 17.7–24.8 | 12.9–20.0 |
| 32 | 122.3 | 63.0 | 21.8–32.0 | 19.8–25.9 |
| 36 | 128.2 | 69.1 | 32.0–38.1 | 24.8–30.9 |
| 40 | 126.4 | 75.0 | 36.8–44.4 | 28.9–35.05 |

All dimensions for reference only. * Add suffix 1 or 2 for desired cable range.

# GT07R
## jam nut receptacle

- **For rear panel single hole mounting**
- **Panel seal O-ring included**
- **Environment proof**

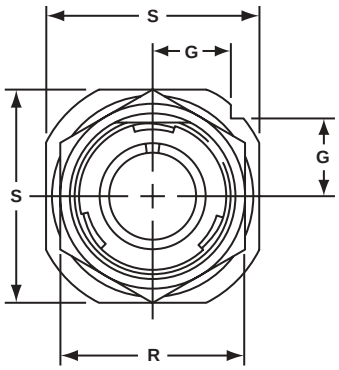


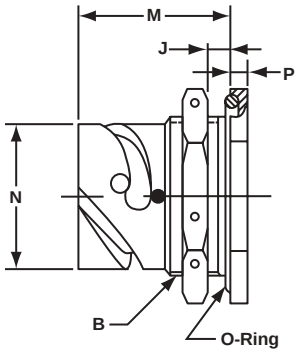


**Inches**

| Shell Size | B Thread Class 2A | G ± .012 | J Wall Thickness Min. | J Wall Thickness Max. | M ± .012 | N + .000 – .006 | P ± .007 | R ± .016 | S ± .012 |
|---|---|---|---|---|---|---|---|---|---|
| 10SL | .8750-20 UNEF | .441 | .094 | .205 | .965 | .717 | .157 | 1.062 | 1.252 |
| 14S | 1.1250-18 UNEF | .575 | .094 | .295 | 1.055 | .969 | .189 | 1.312 | 1.626 |
| 16S | 1.2500-18 UNEF | .618 | .094 | .295 | 1.055 | 1.079 | .189 | 1.500 | 1.748 |
| 16 | 1.2500-18 UNEF | .618 | .094 | .295 | 1.264 | 1.079 | .189 | 1.500 | 1.748 |
| 18 | 1.3750-18 UNEF | .661 | .094 | .354 | 1.327 | 1.213 | .189 | 1.562 | 1.875 |
| 20 | 1.5000-18 UNEF | .709 | .094 | .358 | 1.327 | 1.346 | .189 | 1.750 | 2.000 |
| 22 | 1.6250-18 UNEF | .795 | .094 | .358 | 1.327 | 1.472 | .189 | 2.000 | 2.134 |
| 24 | 1.7500-18 UNEF | .795 | .094 | .358 | 1.327 | 1.610 | .189 | 2.000 | 2.252 |
| 28 | 2.0000-18 UNS | .886 | .094 | .394 | 1.386 | 1.839 | .220 | 2.188 | 2.500 |
| 32 | 2.2500-16 UN | .972 | .094 | .394 | 1.386 | 2.102 | .220 | 2.438 | 2.748 |
| 36 | 2.5000-16 UN | 1.059 | .094 | .327 | 1.386 | 2.346 | .220 | 2.812 | 3.000 |
| 40 | 2.7500-16 UN | 1.165 | .094 | .327 | 1.386 | 2.579 | .220 | 2.953 | 3.248 |

**Millimeters**

| Shell Size | G ± 0.3 | J Wall Thickness Min. | J Wall Thickness Max. | M ± 0.3 | N + 0.00 – 0.15 | P ± 0.2 | R ± 0.4 | S ± 0.3 |
|---|---|---|---|---|---|---|---|---|
| 10SL | 11.2 | 2.4 | 5.2 | 24.5 | 18.2 | 4.0 | 27 | 31.8 |
| 14S | 14.6 | 2.4 | 7.5 | 26.8 | 24.6 | 4.8 | 33 | 41.3 |
| 16S | 15.7 | 2.4 | 7.5 | 26.8 | 27.4 | 4.8 | 38 | 44.4 |
| 16 | 15.7 | 2.4 | 7.5 | 32.1 | 27.4 | 4.8 | 38 | 44.4 |
| 18 | 16.8 | 2.4 | 9.0 | 33.7 | 30.8 | 4.8 | 40 | 47.6 |
| 20 | 18.0 | 2.4 | 9.1 | 33.7 | 34.2 | 4.8 | 44 | 50.8 |
| 22 | 20.2 | 2.4 | 9.1 | 33.7 | 37.4 | 4.8 | 51 | 54.2 |
| 24 | 20.2 | 2.4 | 9.1 | 33.7 | 40.9 | 4.8 | 51 | 57.2 |
| 28 | 22.5 | 2.4 | 10.0 | 35.2 | 46.7 | 5.6 | 56 | 63.5 |
| 32 | 24.7 | 2.4 | 10.0 | 35.2 | 53.4 | 5.6 | 62 | 69.8 |
| 36 | 26.9 | 2.4 | 8.3 | 35.2 | 59.6 | 5.6 | 71 | 76.2 |
| 40 | 29.6 | 2.4 | 8.3 | 35.2 | 65.5 | 5.6 | 75 | 82.5 |

All dimensions for reference only.

# GT070
## jam nut receptacle

- **For rear panel single hole mounting**
- **Threaded rear for accessories**
- **Environment proof**

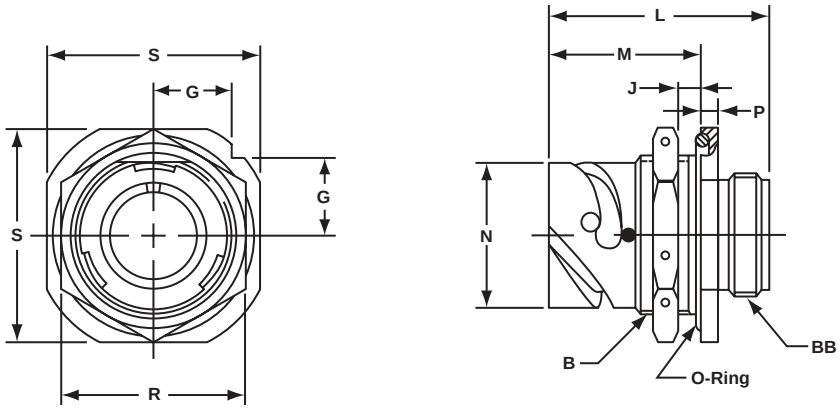


**Inches**

| Shell Size | B Thread Class 2A | G ± .012 | J Wall Thickness Min. | J Wall Thickness Max. | L ± .010 | M ± .012 | N + .000 – .006 | P ± .007 | R ± .016 | S ± .012 | BB Thread Class 2A |
|---|---|---|---|---|---|---|---|---|---|---|---|
| 10SL | .8750-20 UNEF | .441 | .094 | .205 | 1.425 | .965 | .717 | .157 | 1.062 | 1.252 | .6250-24 UNEF |
| 14S | 1.1250-18 UNEF | .575 | .094 | .295 | 1.531 | 1.055 | .969 | .189 | 1.312 | 1.626 | .7500-20 UNEF |
| 16S | 1.2500-18 UNEF | .618 | .094 | .295 | 1.531 | 1.055 | 1.079 | .189 | 1.500 | 1.748 | .8750-20 UNEF |
| 16 | 1.2500-18 UNEF | .618 | .094 | .295 | 1.909 | 1.264 | 1.079 | .189 | 1.500 | 1.748 | .8750-20 UNEF |
| 18 | 1.3750-18 UNEF | .661 | .094 | .354 | 1.941 | 1.327 | 1.213 | .189 | 1.562 | 1.875 | 1.0000-20 UNEF |
| 20 | 1.5000-18 UNEF | .709 | .094 | .358 | 1.941 | 1.327 | 1.346 | .189 | 1.750 | 2.000 | 1.1250-18 UNEF |
| 22 | 1.6250-18 UNEF | .795 | .094 | .358 | 1.941 | 1.327 | 1.472 | .189 | 2.000 | 2.134 | 1.2500-18 UNEF |
| 24 | 1.7500-18 UNEF | .795 | .094 | .358 | 1.953 | 1.327 | 1.610 | .189 | 2.000 | 2.252 | 1.3750-18 UNEF |
| 28 | 2.0000-18 UNS | .886 | .094 | .394 | 2.043 | 1.386 | 1.839 | .220 | 2.188 | 2.500 | 1.6250-18 UNEF |
| 32 | 2.2500-16 UN | .972 | .094 | .394 | 2.043 | 1.386 | 2.102 | .220 | 2.438 | 2.748 | 1.8750-16 UN |
| 36 | 2.5000-16 UN | 1.059 | .094 | .327 | 2.043 | 1.386 | 2.346 | .220 | 2.812 | 3.000 | 2.0625-16 UN |
| 40 | 2.7500-16 UN | 1.165 | .094 | .327 | 2.043 | 1.386 | 2.579 | .220 | 2.953 | 3.248 | 2.3125-16 UN |

**Millimeters**

| Shell Size | G ± 0.3 | J Wall Thickness Min. | J Wall Thickness Max. | L ± 0.3 | M ± 0.3 | N + 0.00 – 0.15 | P ± 0.2 | R ± 0.4 | S ± 0.3 |
|---|---|---|---|---|---|---|---|---|---|
| 10SL | 11.2 | 2.4 | 5.2 | 36.2 | 24.5 | 18.2 | 4.0 | 27 | 31.8 |
| 14S | 14.6 | 2.4 | 7.5 | 38.9 | 26.8 | 24.6 | 4.8 | 33 | 41.3 |
| 16S | 15.7 | 2.4 | 7.5 | 38.9 | 26.8 | 27.4 | 4.8 | 38 | 44.4 |
| 16 | 15.7 | 2.4 | 7.5 | 48.5 | 32.1 | 27.4 | 4.8 | 38 | 44.4 |
| 18 | 16.8 | 2.4 | 9.0 | 49.3 | 33.7 | 30.8 | 4.8 | 40 | 47.6 |
| 20 | 18.0 | 2.4 | 9.1 | 49.3 | 33.7 | 34.2 | 4.8 | 44 | 50.8 |
| 22 | 20.2 | 2.4 | 9.1 | 49.3 | 33.7 | 37.4 | 4.8 | 51 | 54.2 |
| 24 | 20.2 | 2.4 | 9.1 | 49.6 | 33.7 | 40.9 | 4.8 | 51 | 57.2 |
| 28 | 22.5 | 2.4 | 10.0 | 51.9 | 35.2 | 46.7 | 5.6 | 56 | 63.5 |
| 32 | 24.7 | 2.4 | 10.0 | 51.9 | 35.2 | 53.4 | 5.6 | 62 | 69.8 |
| 36 | 26.9 | 2.4 | 8.3 | 51.9 | 35.2 | 59.6 | 5.6 | 71 | 76.2 |
| 40 | 29.6 | 2.4 | 8.3 | 51.9 | 35.2 | 65.5 | 5.6 | 75 | 82.5 |

All dimensions for reference only.

# GT08A
## 90° angle plug

- **Without a wire sealing grommet or clamp**
- **Non-environment proof**
- **If a cable clamp is required, see pages 82 and 84**

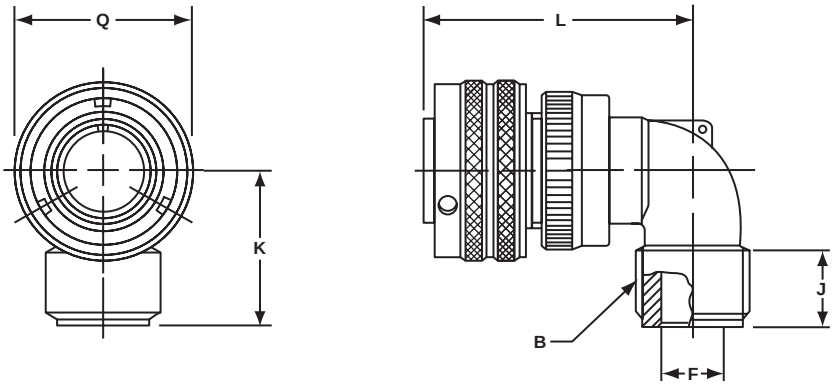


**Inches**

| Shell Size | B Thread Class 2A | F Max. | J Min. | K Max. | L Max. | Q Max. |
|---|---|---|---|---|---|---|
| 10SL | .6250-24UNEF | .337 | .370 | 1.181 | 1.772 | .898 |
| 14S | .7500-20UNEF | .462 | .370 | 1.181 | 1.850 | 1.150 |
| 16S | .8750-20UNEF | .587 | .370 | 1.181 | 1.890 | 1.299 |
| 16 | .8750-20UNEF | .587 | .370 | 1.181 | 2.244 | 1.299 |
| 18 | 1.0000-20UNEF | .685 | .370 | 1.378 | 2.283 | 1.437 |
| 20 | 1.1875-18UNEF | .810 | .370 | 1.378 | 2.402 | 1.571 |
| 22 | 1.1875-18UNEF | .915 | .370 | 1.378 | 2.402 | 1.697 |
| 24 | 1.4375-18UNEF | 1.025 | .370 | 1.575 | 2.598 | 1.835 |
| 28 | 1.4375-18UNEF | 1.139 | .370 | 1.575 | 2.598 | 2.102 |
| 32 | 1.7500-18UNS | 1.447 | .433 | 1.772 | 2.835 | 2.366 |
| 36 | 2.0000-18UNS | 1.687 | .496 | 1.969 | 2.953 | 2.610 |
| 40 | 2.2500-16UN | 1.923 | .496 | 2.165 | 3.071 | 2.850 |

**Millimeters**

| Shell Size | F Max. | J Min. | K Max. | L Max. | Q Max. |
|---|---|---|---|---|---|
| 10SL | 8.5 | 9.4 | 30 | 45 | 22.8 |
| 14S | 11.7 | 9.4 | 30 | 47 | 29.2 |
| 16S | 14.9 | 9.4 | 30 | 48 | 33.0 |
| 16 | 14.9 | 9.4 | 30 | 57 | 33.0 |
| 18 | 17.4 | 9.4 | 35 | 58 | 36.5 |
| 20 | 20.5 | 9.4 | 35 | 61 | 39.9 |
| 22 | 23.2 | 9.4 | 35 | 61 | 43.1 |
| 24 | 26.0 | 9.4 | 40 | 66 | 46.6 |
| 28 | 28.9 | 9.4 | 40 | 66 | 53.4 |
| 32 | 36.7 | 11.0 | 45 | 72 | 60.1 |
| 36 | 42.8 | 12.6 | 50 | 75 | 66.3 |
| 40 | 48.8 | 12.6 | 55 | 78 | 72.4 |

All dimensions for reference only.

# GT08AF/08F
## 90° angle plug

**GT08AF**
- **With a cable clamp**
- **Wire sealing grommet not included**
- **Non-environment proof**

**GT08F**
- **With a wire sealing grommet and cable clamp**
- **For use with individual wires**
- **Environment proof**

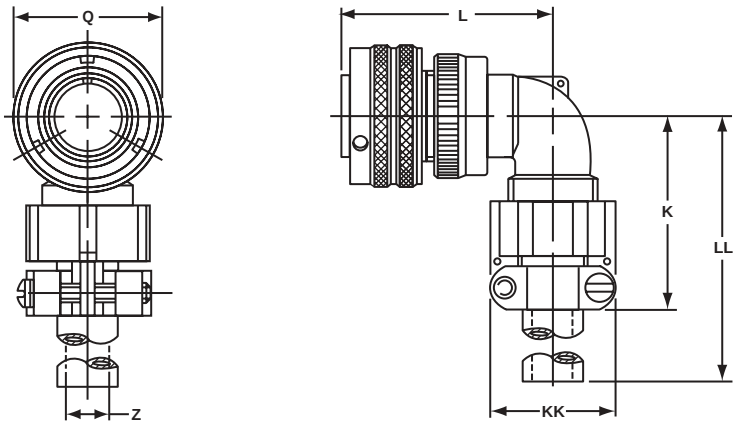


**Inches**

| Shell Size | K Max. | L Max. | Q Max. | Z Max. | KK Max. | LL Max. |
|---|---|---|---|---|---|---|
| 10SL | 1.654 | 1.772 | .898 | .220 | .894 | 3.937 |
| 14S | 1.654 | 1.850 | 1.150 | .312 | 1.083 | 3.937 |
| 16S | 1.772 | 1.890 | 1.299 | .437 | 1.181 | 3.937 |
| 16 | 1.772 | 2.244 | 1.299 | .437 | 1.181 | 3.937 |
| 18 | 2.087 | 2.283 | 1.437 | .562 | 1.299 | 3.937 |
| 20 | 2.087 | 2.402 | 1.571 | .625 | 1.476 | 3.937 |
| 22 | 2.087 | 2.402 | 1.697 | .625 | 1.476 | 3.937 |
| 24 | 2.283 | 2.598 | 1.835 | .750 | 1.705 | 3.937 |
| 28 | 2.283 | 2.598 | 2.102 | .750 | 1.705 | 3.937 |
| 32 | 2.598 | 2.835 | 2.366 | .937 | 2.061 | 4.331 |
| 36 | 2.717 | 2.953 | 2.610 | 1.250 | 2.283 | 4.331 |
| 40 | 3.740 | 3.071 | 2.850 | 1.375 | 2.579 | 5.512 |

**Millimeters**

| Shell Size | K Max. | L Max. | Q Max. | Z Max. | KK Max. | LL Max. |
|---|---|---|---|---|---|---|
| 10SL | 42 | 45 | 22.8 | 5.58 | 22.7 | 100 |
| 14S | 42 | 47 | 29.2 | 7.92 | 27.5 | 100 |
| 16S | 45 | 48 | 33.0 | 11.09 | 30.0 | 100 |
| 16 | 45 | 57 | 33.0 | 11.09 | 30.0 | 100 |
| 18 | 53 | 58 | 36.5 | 14.27 | 33.0 | 100 |
| 20 | 53 | 61 | 39.9 | 15.87 | 37.5 | 100 |
| 22 | 53 | 61 | 43.1 | 15.87 | 37.5 | 100 |
| 24 | 58 | 66 | 46.6 | 19.05 | 43.3 | 100 |
| 28 | 58 | 66 | 53.4 | 19.05 | 43.3 | 100 |
| 32 | 66 | 72 | 60.1 | 23.79 | 51.7 | 110 |
| 36 | 69 | 75 | 66.3 | 31.75 | 58.0 | 110 |
| 40 | 95 | 78 | 72.4 | 34.92 | 65.5 | 140 |

All dimensions for reference only.

# GT08CFGG
## 90° angle plug

- **Rubber covered coupling nut provides superior gripping surface and seals beyond ramps**
- **Includes clamp to grip and seal jacketed cable**
- **Mates with GT020RFSM (see page 44)**
- **Environment proof**

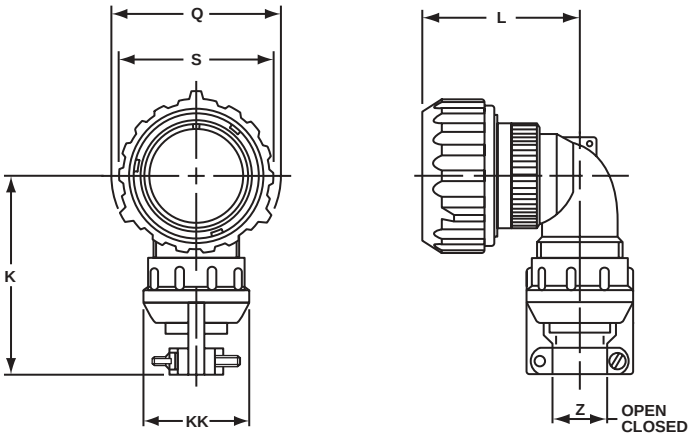


**Inches**

| Shell Size* | K Max. | L Max. | Q Dia. | S Dia. | Z Open | Z Closed | KK ± .008 |
|---|---|---|---|---|---|---|---|
| 10SL | 2.402 | 1.929 | 1.319 | 1.122 | .312 | .094 | .890 |
| 18 | 2.677 | 2.520 | 1.929 | 1.713 | .625 | .378 | 1.220 |
| 20 | 2.677 | 2.638 | 2.028 | 1.811 | .748 | .445 | 1.469 |
| 22 | 2.677 | 2.638 | 2.205 | 1.988 | .748 | .445 | 1.469 |
| 24 | 2.992 | 2.874 | 2.362 | 2.126 | .937 | .610 | 1.654 |
| 28 | 2.992 | 2.874 | 2.638 | 2.402 | .937 | .610 | 1.654 |
| 32 | 3.425 | 3.071 | 2.992 | 2.661 | 1.250 | .921 | 2.126 |
| 36 | 3.858 | 3.189 | 3.240 | 2.925 | 1.378 | .921 | 2.248 |
| 40 | 4.055 | 3.307 | 3.465 | 3.150 | 1.624 | 1.177 | 2.500 |

**Millimeters**

| Shell Size* | K Max. | L Max. | Q Dia. | S Dia. | Z Open | Z Closed | KK ± 0.2 |
|---|---|---|---|---|---|---|---|
| 10SL | 61 | 49 | 33.5 | 28.5 | 7.93 | 2.38 | 22.6 |
| 18 | 68 | 64 | 49.0 | 43.5 | 15.87 | 9.60 | 31.0 |
| 20 | 68 | 67 | 51.5 | 46.0 | 19.00 | 11.30 | 37.3 |
| 22 | 68 | 67 | 56.0 | 50.5 | 19.00 | 11.30 | 37.3 |
| 24 | 76 | 73 | 60.0 | 54.0 | 23.80 | 15.50 | 42.0 |
| 28 | 76 | 73 | 67.0 | 61.0 | 23.80 | 15.50 | 42.0 |
| 32 | 87 | 78 | 76.0 | 67.6 | 31.75 | 23.40 | 54.0 |
| 36 | 98 | 81 | 82.3 | 74.3 | 35.00 | 23.40 | 57.1 |
| 40 | 103 | 84 | 88.0 | 80.0 | 41.25 | 29.90 | 63.5 |

All dimensions for reference only.
* 14s, 16s and 16 shell sizes are available upon request.

# GT08LT
## 90° angle plug

- **For termination of metallic core conduit**
- **With individual wire sealing grommet**
- **Environment proof**

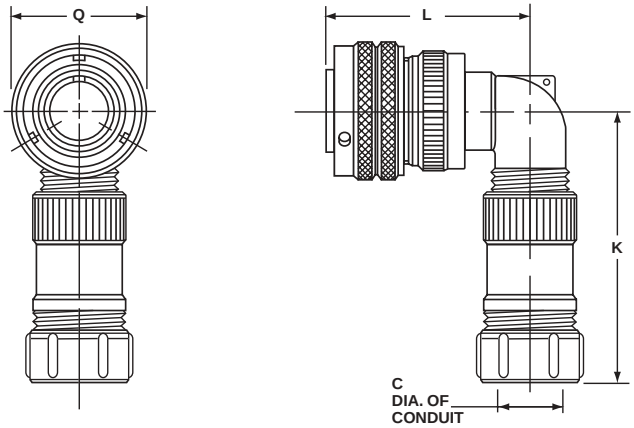


**Inches**

| Shell Size | K Max. | L Max. | Q Max. |
|---|---|---|---|
| 10SL | Dependent on Conduit and Shell Combination<br><br>Consult Amphenol, Sidney, NY for further information | 1.772 | .898 |
| 14S | | 1.850 | 1.150 |
| 16S | | 1.890 | 1.299 |
| 16 | | 2.244 | 1.299 |
| 18 | | 2.283 | 1.437 |
| 20 | | 2.402 | 1.571 |
| 22 | | 2.402 | 1.697 |
| 24 | | 2.598 | 1.835 |
| 28 | | 2.598 | 2.102 |
| 32 | | 2.835 | 2.366 |
| 36 | | 2.953 | 2.610 |
| 40 | | 3.071 | 2.850 |

**Inches**

| C Conduit Size |
|---|
| 3/8 |
| 1/2 |
| 3/4 |
| 1 |
| 1-1/4 |
| 1-1/2 |
| 2 |

**Millimeters**

| Shell Size | K Max. | L Max. | Q Max. |
|---|---|---|---|
| 10SL | Dependent on Conduit and Shell Combination<br><br>Consult Amphenol, Sidney, NY for further information | 45.01 | 22.81 |
| 14S | | 46.99 | 29.21 |
| 16S | | 48.01 | 32.99 |
| 16 | | 57.00 | 32.99 |
| 18 | | 57.99 | 36.50 |
| 20 | | 61.01 | 39.90 |
| 22 | | 61.01 | 43.10 |
| 24 | | 65.99 | 46.61 |
| 28 | | 65.99 | 53.39 |
| 32 | | 72.01 | 60.10 |
| 36 | | 75.01 | 66.29 |
| 40 | | 78.00 | 72.39 |

**Millimeters**

| C Conduit Size |
|---|
| 9.53 |
| 12.70 |
| 19.05 |
| 25.40 |
| 31.75 |
| 38.10 |
| 50.80 |

All dimensions for reference only.

# GT08PFC
## 90° angle plug

- **For termination of plastic flexible corrugated conduit**
- **With individual wire sealing grommet**
- **Environment proof**

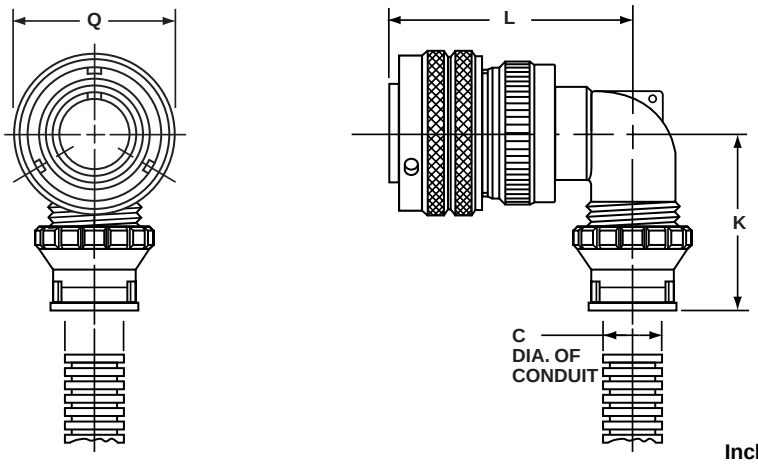


**Inches**

| Shell Size | C Conduit Size | K Max. | L Max. | Q Max. |
|---|---|---|---|---|
| 10SL | Wide Variety of Sizes<br><br>Consult Amphenol, Sidney, NY for further information | Dependent on Conduit and Shell Combination<br><br>Consult Amphenol, Sidney, NY for further information | 1.772 | .898 |
| 14S | | | 1.850 | 1.150 |
| 16S | | | 1.890 | 1.299 |
| 16 | | | 2.244 | 1.299 |
| 18 | | | 2.283 | 1.437 |
| 20 | | | 2.402 | 1.571 |
| 22 | | | 2.402 | 1.697 |
| 24 | | | 2.598 | 1.835 |
| 28 | | | 2.598 | 2.102 |
| 32 | | | 2.835 | 2.366 |
| 36 | | | 2.953 | 2.610 |
| 40 | | | 3.071 | 2.850 |

**Millimeters**

| Shell Size | C Conduit Size | K Max. | L Max. | Q Max. |
|---|---|---|---|---|
| 10SL | Wide Variety of Sizes<br><br>Consult Amphenol, Sidney, NY for further information | Dependent on Conduit and Shell Combination<br><br>Consult Amphenol, Sidney, NY for further information | 45.01 | 22.81 |
| 14S | | | 46.99 | 29.21 |
| 16S | | | 48.01 | 32.99 |
| 16 | | | 57.00 | 32.99 |
| 18 | | | 57.99 | 36.50 |
| 20 | | | 61.01 | 39.90 |
| 22 | | | 61.01 | 43.10 |
| 24 | | | 65.99 | 46.61 |
| 28 | | | 65.99 | 53.39 |
| 32 | | | 72.01 | 60.10 |
| 36 | | | 75.01 | 66.29 |
| 40 | | | 78.00 | 72.39 |

All dimensions for reference only.

# GT08R
## 90° angle plug

- **With a wire sealing grommet for conduit termination**
- **For use with individual wires**
- **Environment proof**

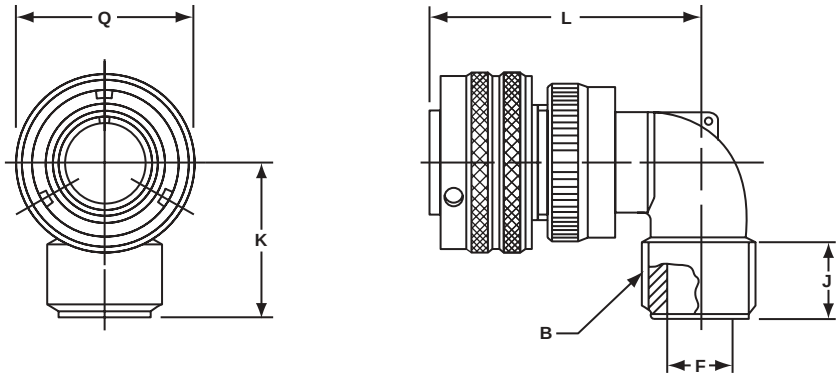


**Inches**

| Shell Size | B Thread Class 2A | F Max. | J Min. | K Max. | L Max. | Q Max. |
|---|---|---|---|---|---|---|
| 10SL | .6250-24UNEF | .337 | .370 | 1.181 | 1.772 | .898 |
| 14S | .7500-20UNEF | .462 | .370 | 1.181 | 1.850 | 1.150 |
| 16S | .8750-20UNEF | .587 | .370 | 1.181 | 1.890 | 1.299 |
| 16 | .8750-20UNEF | .587 | .370 | 1.181 | 2.244 | 1.299 |
| 18 | 1.0000-20UNEF | .685 | .370 | 1.378 | 2.283 | 1.437 |
| 20 | 1.1875-18UNEF | .810 | .370 | 1.378 | 2.402 | 1.571 |
| 22 | 1.1875-18UNEF | .915 | .370 | 1.378 | 2.402 | 1.697 |
| 24 | 1.4375-18UNEF | 1.025 | .370 | 1.575 | 2.598 | 1.835 |
| 28 | 1.4375-18UNEF | 1.139 | .370 | 1.575 | 2.598 | 2.102 |
| 32 | 1.7500-18UNS | 1.447 | .433 | 1.772 | 2.835 | 2.366 |
| 36 | 2.0000-18UNS | 1.687 | .496 | 1.969 | 2.953 | 2.610 |
| 40 | 2.2500-16UN | 1.923 | .496 | 2.165 | 3.071 | 2.850 |

**Millimeters**

| Shell Size | F Max. | J Min. | K Max. | L Max. | Q Max. |
|---|---|---|---|---|---|
| 10SL | 8.5 | 9.4 | 30 | 45 | 22.8 |
| 14S | 11.7 | 9.4 | 30 | 47 | 29.2 |
| 16S | 14.9 | 9.4 | 30 | 48 | 33.0 |
| 16 | 14.9 | 9.4 | 30 | 57 | 33.0 |
| 18 | 17.4 | 9.4 | 35 | 58 | 36.5 |
| 20 | 20.5 | 9.4 | 35 | 61 | 39.9 |
| 22 | 23.2 | 9.4 | 35 | 61 | 43.1 |
| 24 | 26.0 | 9.4 | 40 | 66 | 46.6 |
| 28 | 28.9 | 9.4 | 40 | 66 | 53.4 |
| 32 | 36.7 | 11.0 | 45 | 72 | 60.1 |
| 36 | 42.8 | 12.6 | 50 | 75 | 66.3 |
| 40 | 48.8 | 12.6 | 55 | 78 | 72.4 |

All dimensions for reference only.

# GT05
## dummy receptacle

- **Square flange**
- **Four through mounting holes**
- **Stows cable plugs when not in use**

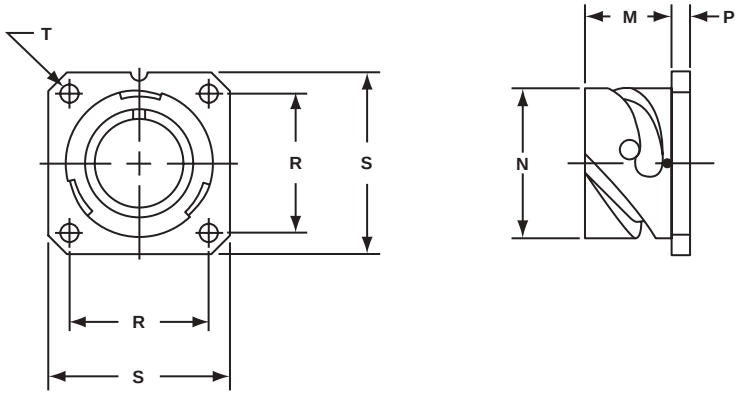


**Inches**

| Shell Size | M + .016 – .000 | N + .000 – .006 | P ± .008 | R ± .004 | S ± .012 | T + .004 – .000 |
|---|---|---|---|---|---|---|
| 10SL | .559 | .717 | .110 | .717 | 1.000 | .126 |
| 14S | .559 | .969 | .126 | .906 | 1.181 | .126 |
| 16S | .559 | 1.079 | .126 | .969 | 1.280 | .126 |
| 16 | .748 | 1.079 | .126 | .969 | 1.280 | .126 |
| 18 | .748 | 1.213 | .157 | 1.063 | 1.378 | .126 |
| 20 | .748 | 1.346 | .157 | 1.157 | 1.496 | .126 |
| 22 | .748 | 1.472 | .157 | 1.252 | 1.614 | .126 |
| 24 | .811 | 1.610 | .157 | 1.374 | 1.752 | .146 |
| 28 | .811 | 1.839 | .157 | 1.563 | 2.000 | .146 |
| 32 | .874 | 2.102 | .157 | 1.752 | 2.244 | .169 |
| 36 | .874 | 2.346 | .157 | 1.937 | 2.500 | .169 |
| 40 | .874 | 2.579 | .157 | 2.185 | 2.752 | .169 |

**Millimeters**

| Shell Size | M + 0.4 – 0.0 | N + 0.00 – 0.15 | P ± 0.2 | R ± 0.1 | S ± 0.3 | T + 0.1 – 0.0 |
|---|---|---|---|---|---|---|
| 10SL | 14.2 | 18.2 | 2.8 | 18.2 | 25.4 | 3.2 |
| 14S | 14.2 | 24.6 | 3.2 | 23.0 | 30.0 | 3.2 |
| 16S | 14.2 | 27.4 | 3.2 | 24.6 | 32.5 | 3.2 |
| 16 | 19.0 | 27.4 | 3.2 | 24.6 | 32.5 | 3.2 |
| 18 | 19.0 | 30.8 | 4.0 | 27.0 | 35.0 | 3.2 |
| 20 | 19.0 | 34.2 | 4.0 | 29.4 | 38.0 | 3.2 |
| 22 | 19.0 | 37.4 | 4.0 | 31.8 | 41.0 | 3.2 |
| 24 | 20.6 | 40.9 | 4.0 | 34.9 | 44.5 | 3.7 |
| 28 | 20.6 | 46.7 | 4.0 | 39.7 | 50.8 | 3.7 |
| 32 | 22.2 | 53.4 | 4.0 | 44.5 | 57.0 | 4.3 |
| 36 | 22.2 | 59.6 | 4.0 | 49.2 | 63.5 | 4.3 |
| 40 | 22.2 | 65.5 | 4.0 | 55.5 | 69.9 | 4.3 |

All dimensions for reference only.

# GTTB
# thru-bulkhead receptacles

- **Accepts mating plug on both sides**
- **Four through mounting holes**

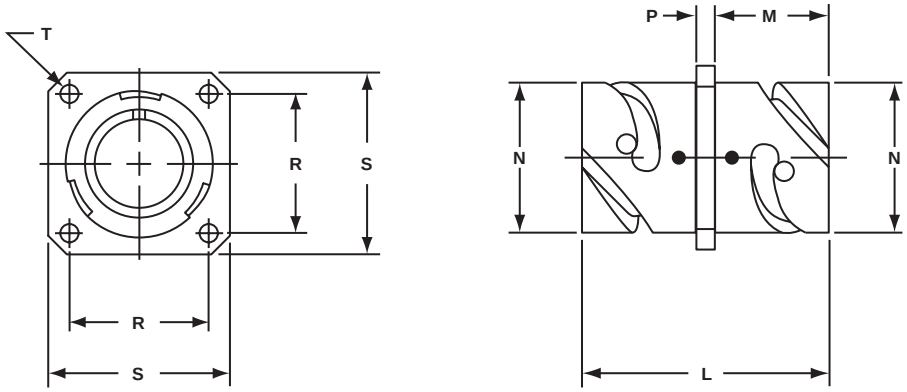


**Inches**

| Shell Size | L Max. | M + .016 – .000 | N + .000 – .006 | P ± .008 | R ± .004 | S ± .012 | T + .004 – .000 |
|---|---|---|---|---|---|---|---|
| 10SL | 1.488 | .717 | .717 | .110 | .717 | 1.000 | .126 |
| 14S | 1.488 | .717 | .969 | .126 | .906 | 1.181 | .126 |
| 16S | 1.488 | .717 | 1.079 | .126 | .969 | 1.280 | .126 |
| 16 | 2.049 | .846 | 1.079 | .126 | .969 | 1.280 | .126 |
| 18 | 2.049 | .907 | 1.213 | .157 | 1.063 | 1.378 | .126 |
| 20 | 2.049 | .907 | 1.346 | .157 | 1.157 | 1.496 | .126 |
| 22 | 2.049 | .907 | 1.472 | .157 | 1.252 | 1.614 | .126 |
| 24 | 2.049 | .907 | 1.610 | .157 | 1.374 | 1.752 | .146 |
| 28 | 2.049 | .947 | 1.839 | .157 | 1.563 | 2.000 | .146 |
| 32 | 2.049 | .947 | 2.102 | .157 | 1.752 | 2.244 | .169 |
| 36 | 2.049 | .947 | 2.346 | .157 | 1.937 | 2.500 | .169 |
| 40 | 2.049 | .947 | 2.579 | .157 | 2.185 | 2.752 | .169 |

**Millimeters**

| Shell Size | L Max. | M + 0.4 – 0.0 | N + 0.00 – 0.15 | P ± 0.2 | R ± 0.1 | S ± 0.3 | T + .004 – .000 |
|---|---|---|---|---|---|---|---|
| 10SL | 37.7 | 18.2 | 18.2 | 2.8 | 18.2 | 25.4 | 3.2 |
| 14S | 37.7 | 18.2 | 24.6 | 3.2 | 23.0 | 30.0 | 3.2 |
| 16S | 37.7 | 18.2 | 27.4 | 3.2 | 24.6 | 32.5 | 3.2 |
| 16 | 52.0 | 21.5 | 27.4 | 3.2 | 24.6 | 32.5 | 3.2 |
| 18 | 52.0 | 23.0 | 30.8 | 4.0 | 27.0 | 35.0 | 3.2 |
| 20 | 52.0 | 23.0 | 34.2 | 4.0 | 29.4 | 38.0 | 3.2 |
| 22 | 52.0 | 23.0 | 37.4 | 4.0 | 31.8 | 41.0 | 3.2 |
| 24 | 52.0 | 23.0 | 40.9 | 4.0 | 34.9 | 44.5 | 3.7 |
| 28 | 52.0 | 24.0 | 46.7 | 4.0 | 39.7 | 50.8 | 3.7 |
| 32 | 52.0 | 24.0 | 53.4 | 4.0 | 44.5 | 57.0 | 4.3 |
| 36 | 52.0 | 24.0 | 59.6 | 4.0 | 49.2 | 63.5 | 4.3 |
| 40 | 52.0 | 24.0 | 65.5 | 4.0 | 55.5 | 69.9 | 4.3 |

All dimensions for reference only.

# GT Connectors – accessories

## 10-40450, 10-36675, 10-580649 sealing gaskets

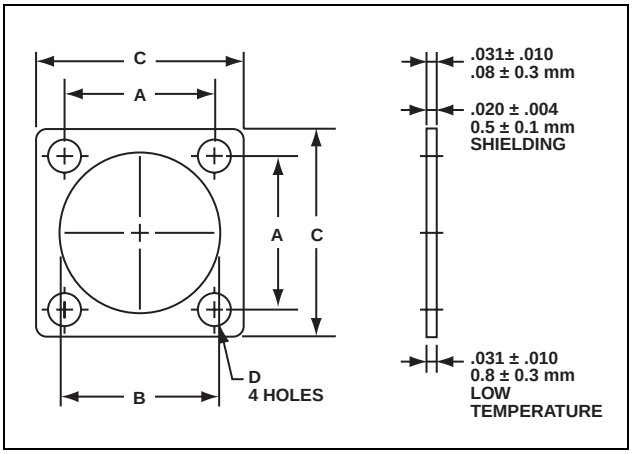

PLAIN FLAT GASKET
The Amphenol® plain flat gasket of synthetic rubber material is provided to take complete advantage of waterproof and pressure sealing features. It is for use with the flange mounted receptacle.

SHIELDING GASKET
This flat gasket is provided to give the maximum in connector performance. Its special feature is in providing the maximum radio shielding under difficult conditions of high receiver sensitivity and low signal strength while retaining the sealing characteristics of the plain gasket. This gasket is for use with the flange mounting receptacle.

LOW TEMPERATURE GASKET
This gasket is provided for applications where the major requirement is resistance to the injurious effects of extremely low temperature. Even at temperatures as low as –67°F this gasket retains its resiliency and will seal a pressure differential of 30 psi.

Additional versions of gaskets are available including low smoke zero halogen, and also high temperature and conductive types. Consult Amphenol Industrial Operations, Sidney NY, for further information.

| Installation Dimensions | | | | | |
|---|---|---|---|---|---|
| MS Shell Size | A ± .010 | Front Panel Versions B + .016 – .000 | Rear Panel Version B + .016 – .000 | C + .016 – .000 | D ± .010 |
| 10SL | .719 | .625 | .724 | 1.000 | .172 |
| 14S | .906 | .875 | .976 | 1.188 | .172 |
| 16S | .969 | 1.000 | 1.087 | 1.281 | .172 |
| 16 | .969 | 1.000 | 1.087 | 1.281 | .172 |
| 18 | 1.063 | 1.125 | 1.220 | 1.375 | .203 |
| 20 | 1.156 | 1.250 | 1.354 | 1.500 | .203 |
| 22 | 1.250 | 1.375 | 1.480 | 1.625 | .203 |
| 24 | 1.375 | 1.500 | 1.618 | 1.750 | .203 |
| 28 | 1.563 | 1.750 | 1.846 | 2.000 | .203 |
| 32 | 1.750 | 2.000 | 2.110 | 2.250 | .219 |
| 36 | 1.938 | 2.188 | 2.354 | 2.500 | .219 |
| 40 | 2.188 | 2.438 | 2.587 | 2.750 | .219 |

| Installation Dimensions | | | | | |
|---|---|---|---|---|---|
| MS Shell Size | A ± 0.2 | Front Panel Versions B + 0.4 – 0.0 | Rear Panel Version B + 0.4 – 0.0 | C + 0.4 – 0.0 | D ± 0.2 |
| 10SL | 18.2 | 15.9 | 18.4 | 25.4 | 4.36 |
| 14S | 23.0 | 22.2 | 24.8 | 30.2 | 4.36 |
| 16S | 24.6 | 25.4 | 27.6 | 32.5 | 4.36 |
| 16 | 24.6 | 25.4 | 27.6 | 32.5 | 4.36 |
| 18 | 27.0 | 28.57 | 31.0 | 35.0 | 5.15 |
| 20 | 29.4 | 31.75 | 34.4 | 38.1 | 5.15 |
| 22 | 31.8 | 34.9 | 37.6 | 41.2 | 5.15 |
| 24 | 34.9 | 38.1 | 41.1 | 44.5 | 5.15 |
| 28 | 39.7 | 44.45 | 46.9 | 50.8 | 5.15 |
| 32 | 44.5 | 50.8 | 53.6 | 57.2 | 5.56 |
| 36 | 49.2 | 55.57 | 59.8 | 63.5 | 5.56 |
| 40 | 55.6 | 61.92 | 65.7 | 69.9 | 5.56 |

| Order Data for Front Panel Mount Gaskets | | | |
|---|---|---|---|
| Front Panel Plain Version | Front Panel Shielding Version | Front Panel Low Temperature Version | Front Panel Low Smoke ZH Version |
| 10-40450-10 | 10-40450-10S | 10-36675-10 | LS-40450-10 |
| 10-40450-14 | 10-40450-14S | 10-36675-14 | LS-40450-14 |
| 10-40450-16 | 10-40450-16S | 10-36675-16 | LS-40450-16 |
| 10-40450-18 | 10-40450-18S | 10-36675-18 | LS-40450-18 |
| 10-40450-20 | 10-40450-20S | 10-36675-20 | LS-40450-20 |
| 10-40450-22 | 10-40450-22S | 10-36675-22 | LS-40450-22 |
| 10-40450-24 | 10-40450-24S | 10-36675-24 | LS-40450-24 |
| 10-40450-28 | 10-40450-28S | 10-36675-28 | LS-40450-26 |
| 10-40450-32 | 10-40450-32S | 10-36675-32 | LS-40450-32 |
| 10-40450-36 | 10-40450-36S | 10-36675-36 | LS-40450-36 |
| 10-40450-40 | 10-40450-40S | 10-36675-40 | LS-40450-40 |

| Order Data for Rear Panel Mount Gaskets | |
|---|---|
| Rear Panel Plain Version | Rear Panel Low Smoke ZH Version |
| 10-580649-11 | LS-580649-11 |
| 10-580649-14 | LS-580649-14 |
| 10-580649-16 | LS-580649-16 |
| 10-580649-18 | LS-580649-18 |
| 10-580649-20 | LS-580649-20 |
| 10-580649-22 | LS-580649-22 |
| 10-580649-24 | LS-580649-24 |
| 10-580649-26 | LS-580649-26 |
| 10-580649-32 | LS-580649-32 |
| 10-580649-36 | LS-580649-36 |
| 10-580649-40 | LS-580649-40 |

# GT Connectors – accessories
## receptacle protection caps

- **Protective metal caps which seal the front of receptacles**
- **Includes a chain for retention of the cap at the required location**
- **For receptacles: GT00, 01, 02, 020, 030, 070**

*** 10-580902-XXX**

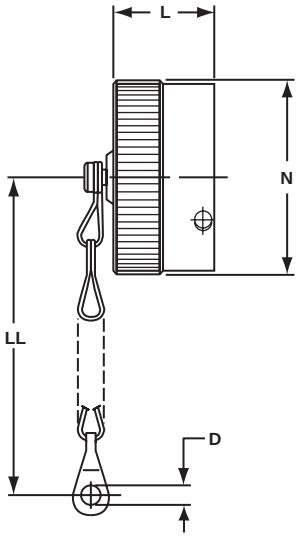


* To complete order number, add shell size and suffix number. For example, shell size 11 with olive drab cadmium plate would be 10-580902-113.

**Inches**

| Shell Size | D + .020 – .000 | L Max. | N Max. | LL Approx. |
|---|---|---|---|---|
| 11 | .173 | .700 | .905 | 5.000 |
| 14 | .173 | .700 | 1.181 | 5.000 |
| 16 | .173 | .700 | 1.280 | 5.000 |
| 17 | .173 | .900 | 1.280 | 5.000 |
| 18 | .173 | .900 | 1.457 | 5.000 |
| 20 | .173 | .900 | 1.594 | 5.000 |
| 22 | .173 | .900 | 1.713 | 5.000 |
| 24 | .173 | .900 | 1.850 | 5.000 |
| 28 | .220 | .900 | 2.126 | 7.480 |
| 32 | .261 | .900 | 2.382 | 7.480 |
| 36 | .261 | .900 | 2.638 | 7.480 |
| 40 | .261 | .900 | 2.874 | 7.480 |

**Millimeters**

| Shell Size | D + 0.5 – 0.0 | L Max. | N Max. | LL Approx. |
|---|---|---|---|---|
| 11 | 4.4 | 17.8 | 23.0 | 127 |
| 14 | 4.4 | 17.8 | 30.0 | 127 |
| 16 | 4.4 | 17.8 | 32.5 | 127 |
| 17 | 4.4 | 22.9 | 32.5 | 127 |
| 18 | 4.4 | 22.9 | 37.0 | 127 |
| 20 | 4.4 | 22.9 | 40.5 | 127 |
| 22 | 4.4 | 22.9 | 43.5 | 127 |
| 24 | 4.4 | 22.9 | 47.0 | 127 |
| 28 | 5.6 | 22.9 | 54.0 | 190 |
| 32 | 5.6 | 22.9 | 60.5 | 190 |
| 36 | 5.6 | 22.9 | 67.0 | 175 |
| 40 | 5.6 | 22.9 | 73.0 | 190 |

All dimensions for reference only.

| Finish | Suffix |
|---|---|
| Black anodize | -XXZ |
| Olive drab cadmium plate | -XX3 |
| Olive drab cadmium nickel base | -XX9 |
| Electroless nickel | -XXG |
| Green zinc cobalt | -XXU |
| Black zinc cobalt | -XXY |

# GT Connectors – accessories
## plug protection caps

- **Protective metal caps which seal the front of plugs**
- **Includes a chain for retention of the cap at the required location**
- **For plugs: GT06, 08**

*** 10-580903-XXX**

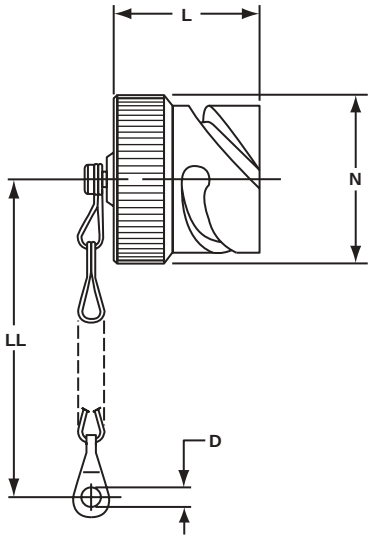


* To complete order number, add shell size and suffix number. For example, shell size 11 with olive drab cadmium plate would be 10-580903-113.

**Inches**

| Shell Size | D + .020 – .000 | L Max. | N Max. | LL Approx. |
|---|---|---|---|---|
| 11 | .157 | .945 | .807 | 5.000 |
| 14 | .157 | .945 | 1.059 | 5.000 |
| 16 | .157 | .945 | 1.169 | 5.000 |
| 17 | .157 | .945 | 1.169 | 5.000 |
| 18 | .157 | .945 | 1.303 | 5.000 |
| 20 | .189 | 1.260 | 1.437 | 5.520 |
| 22 | .189 | 1.260 | 1.563 | 5.520 |
| 24 | .189 | 1.260 | 1.701 | 5.520 |
| 28 | .220 | 1.260 | 1.929 | 7.480 |
| 32 | .261 | 1.260 | 2.193 | 7.480 |
| 36 | .261 | 1.260 | 2.437 | 7.480 |
| 40 | .261 | 1.260 | 2.665 | 7.480 |

**Millimeters**

| Shell Size | D + 0.5 – 0.0 | L Max. | N Max. | LL Approx. |
|---|---|---|---|---|
| 11 | 4.0 | 24 | 20.5 | 127 |
| 14 | 4.0 | 24 | 26.9 | 127 |
| 16 | 4.0 | 24 | 29.7 | 127 |
| 17 | 4.0 | 24 | 29.7 | 127 |
| 18 | 4.0 | 24 | 33.1 | 127 |
| 20 | 4.8 | 32 | 36.5 | 140 |
| 22 | 4.8 | 32 | 39.7 | 140 |
| 24 | 4.8 | 32 | 43.2 | 140 |
| 28 | 4.8 | 32 | 49.0 | 190 |
| 32 | 5.6 | 32 | 55.7 | 190 |
| 36 | 5.6 | 32 | 61.9 | 190 |
| 40 | 5.6 | 32 | 67.7 | 190 |

All dimensions for reference only.

| Finish | Suffix |
|---|---|
| Black anodize | -XXZ |
| Olive drab cadmium plate | -XX3 |
| Olive drab cadmium nickel base | -XX9 |
| Electroless nickel | -XXG |
| Green zinc cobalt | -XXU |
| Black zinc cobalt | -XXY |

# GT Connectors – accessories

## MS3057-A style cable clamp

- **Concentric cable clamps, insure strain relief and central location of the cable**
- **Can be used with bushing MS3420**

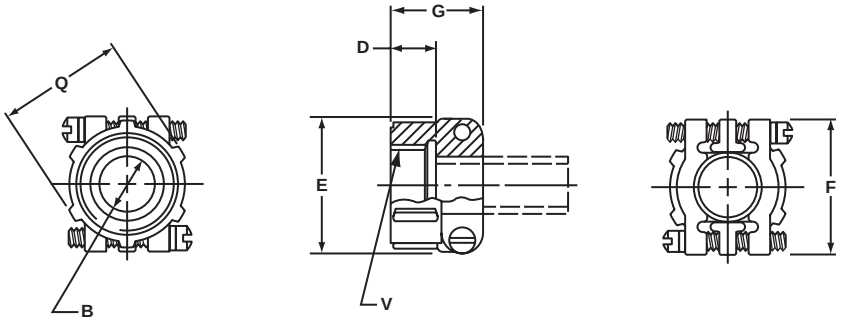


**Inches**

| Part Number | Used with Shell Size | Used with Bushing | B | D | G | F | V Thread Class 2B |
|---|---|---|---|---|---|---|---|
| 97-3057-1004 | 10SL | MS3420-4 | .315 | .395 | .812 | .866 | .6250-24 UNEF |
| 97-3057-1007 | 14S | MS3420-6 | .442 | .395 | .875 | 1.063 | .7500-20 UNEF |
| 97-3057-1008 | 16 - 16S | MS3420-8 | .568 | .395 | .945 | 1.145 | .8750-20 UNEF |
| 97-3057-1010 | 18 | MS3420-10 | .633 | .395 | .945 | 1.244 | 1.0000-20 UNEF |
| 97-3057-1012 | 20 - 22 | MS3420-12 | .758 | .395 | .945 | 1.475 | 1.1875-18 UNEF |
| 97-3057-1016 | 24 - 28 | MS3420-16 | .948 | .395 | 1.031 | 1.700 | 1.4375-18 UNEF |
| 97-3057-1020 | 32 | MS3420-20 | 1.256 | .460 | 1.094 | 2.055 | 1.7500-18 UNS |
| 97-3057-1024 | 36 | MS3420-24 | 1.380 | .520 | 1.157 | 2.265 | 2.0000-18 UNS |
| 10-824810-028 | 40 | MS3420-28 | 1.625 | .520 | 1.685 | 2.683 | 2.2500-16 UN |

**Millimeters**

| Part Number | Used with Shell Size | Used with Bushing | B | D | G | F |
|---|---|---|---|---|---|---|
| 97-3057-1004 | 10SL | MS3420-4 | 8.0 | 10.0 | 20.6 | 22 |
| 97-3057-1007 | 14S | MS3420-6 | 11.0 | 10.0 | 22.2 | 27 |
| 97-3057-1008 | 16 - 16S | MS3420-8 | 14.4 | 10.0 | 24.0 | 29 |
| 97-3057-1010 | 18 | MS3420-10 | 16.1 | 10.0 | 24.0 | 32 |
| 97-3057-1012 | 20 - 22 | MS3420-12 | 19.2 | 10.0 | 24.0 | 37 |
| 97-3057-1016 | 24 - 28 | MS3420-16 | 24.1 | 10.0 | 26.2 | 43 |
| 97-3057-1020 | 32 | MS3420-20 | 31.9 | 11.7 | 27.8 | 52 |
| 97-3057-1024 | 36 | MS3420-24 | 35.0 | 13.2 | 29.4 | 58 |
| 10-824810-028 | 40 | MS3420-28 | 41.3 | 13.2 | 42.8 | 68 |

All dimensions for reference only.

# GT Connectors – accessories
## MS3420 bushing

- **Bushing of synthetic rubber to be used with cable clamps for protection of the cable or wires**
- **Can be telescoped for smaller cable diameters**

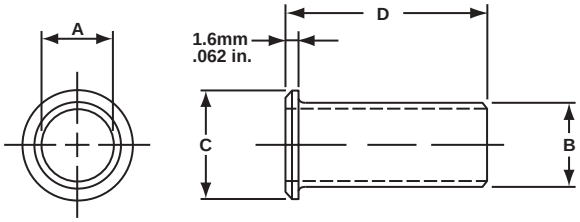


**Inches**

| Part Number | Used with Cable Clamp | A | B | C | D |
|---|---|---|---|---|---|
| MS3420-3 | M85049/41-3A | .130 | .210 | .379 | 2.875 |
| MS3420-4 | M85049/41-4A | .220 | .302 | .505 | 2.750 |
| MS3420-6 | M85049/41-6A | .312 | .427 | .619 | 2.625 |
| MS3420-8 | M85049/41-8A | .437 | .552 | .744 | 2.500 |
| MS3420-10 | M85049/41-10A | .562 | .615 | .889 | 2.375 |
| MS3420-12 | M85049/41-12A | .625 | .740 | 1.084 | 2.250 |
| MS3420-16 | M85049/41-16A | .750 | .927 | 1.314 | 2.125 |
| MS3420-20 | M85049/41-20A | .937 | 1.240 | 1.598 | 2.000 |
| MS3420-24 | M85049/41-24A | 1.250 | 1.365 | 1.847 | 1.875 |
| MS3420-28 | M85049/41-28A | 1.375 | 1.614 | 2.085 | 1.750 |

**Millimeters**

| Part Number | Used with Cable Clamp | A | B | C | D |
|---|---|---|---|---|---|
| MS3420-3 | M85049/41-3A | 3.30 | 5.3 | 9.60 | 73.0 |
| MS3420-4 | M85049/41-4A | 5.58 | 7.7 | 12.80 | 69.8 |
| MS3420-6 | M85049/41-6A | 7.92 | 10.8 | 15.70 | 66.8 |
| MS3420-8 | M85049/41-8A | 11.09 | 14.0 | 18.90 | 63.5 |
| MS3420-10 | M85049/41-10A | 14.27 | 15.6 | 22.58 | 60.3 |
| MS3420-12 | M85049/41-12A | 15.87 | 18.8 | 27.50 | 57.1 |
| MS3420-16 | M85049/41-16A | 19.05 | 23.5 | 33.40 | 53.9 |
| MS3420-20 | M85049/41-20A | 23.79 | 31.5 | 40.60 | 50.8 |
| MS3420-24 | M85049/41-24A | 31.75 | 34.7 | 46.90 | 47.6 |
| MS3420-28 | M85049/41-28A | 34.92 | 41.0 | 52.90 | 44.4 |

All dimensions for reference only.

# GT Connectors – accessories

## MS3057-C style (10-350349) cable clamp

- **Waterproof clamp for jacketed cables**
- **Provides mechanical strain relief plus concentric clamping over a wide range of cable sizes**
- **A neoprene* gland seal ensures a waterproof seal on the cable jacket**

* Other materials available

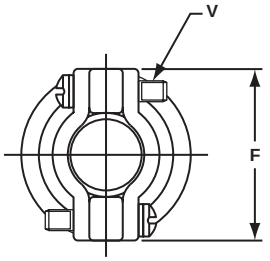


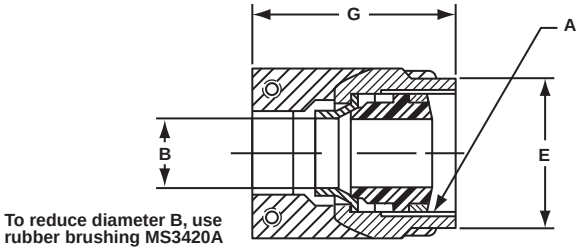


| Part Number | Used with Shell Size | A Thread Class 2B in inches | V Thread Class 2A in inches | Used with Bushing | Bushing Opening Inches | | Busing Opening Millimeters | |
|---|---|---|---|---|---|---|---|---|
| | | | | | Open | Closed | Open | Closed |
| 10-350349-123 | 10SL | .6250-24 UNEF | 6-32 UNC | MS3420-4A | .219 | .010 | 5.56 | 0.25 |
| 10-350349-143 | 14S | .7500-20 UNEF | 6-32 UNC | MS3420-6A<br>MS3420-4A | .312<br>.219 | .114<br>.020 | 7.93<br>5.56 | 2.89<br>0.50 |
| 10-350349-163 | 16 & 16S | .8750-20 UNEF | 6-32 UNC | MS3420-8A<br>MS3420-6A | .437<br>.312 | .220<br>.085 | 11.10<br>7.93 | 5.60<br>2.15 |
| 10-350349-183 | 18 | 1.0000-20 UNEF | 6-32 UNC | MS3420-10A<br>MS3420-6A | .437<br>.312 | .197<br>.085 | 11.10<br>7.93 | 5.00<br>2.15 |
| 10-350349-203 | 20 & 22 | 1.1875-18 UNEF | 8-32 UNC | MS3420-12A<br>MS3420-8A | .541<br>.437 | .270<br>.177 | 13.74<br>11.10 | 6.85<br>4.50 |
| 10-350349-243 | 24 & 28 | 1.4375-18 UNEF | 8-32 UNC | MS3420-16A<br>MS3420-12A<br>MS3420-8A | .748<br>.541<br>.437 | .429<br>.260<br>.186 | 19.00<br>13.74<br>11.10 | 10.90<br>6.60<br>4.72 |
| 10-350349-323 | 32 | 1.7500-18 UNS | .250-20 UNC | MS3420-20A<br>MS3420-16A<br>MS3420-12A | .937<br>.748<br>.541 | .620<br>.441<br>.273 | 23.80<br>19.00<br>13.74 | 15.74<br>11.20<br>6.93 |
| 10-350349-363 | 36 | 2.0000-18 UNS | .250-20 UNC | MS3420-24A<br>MS3420-20A<br>MS3420-16A | 1.122<br>.937<br>.748 | .681<br>.504<br>.358 | 28.50<br>23.80<br>19.00 | 17.30<br>12.80<br>9.10 |
| 10-350349-403 | 40 | 2.2500-16 UN | .250-20 UNC | MS3420-28A<br>MS3420-20A<br>MS3420-16A | 1.250<br>.937<br>.748 | .815<br>512<br>368 | 31.75<br>23.80<br>19.00 | 20.70<br>13.00<br>9.34 |

**Inches**

| Part Number | Used with Shell Size | B | | E ± .016 | F ± .008 | G + .020 – .000 |
|---|---|---|---|---|---|---|
| | | Open | Closed | | | |
| 10-350349-123 | 10SL | .312 | .094 | .748 | .890 | 1.272 |
| 10-350349-143 | 14S | .438 | .230 | .874 | 1.016 | 1.272 |
| 10-350349-163 | 16 & 16S | .531 | .315 | 1.000 | 1.106 | 1.272 |
| 10-350349-183 | 18 | .625 | .378 | 1.122 | 1.220 | 1.390 |
| 10-350349-203 | 20 & 22 | .748 | .445 | 1.311 | 1.469 | 1.406 |
| 10-350349-243 | 24 &28 | .937 | .610 | 1.559 | 1.654 | 1.516 |
| 10-350349-323 | 32 | 1.250 | .921 | 1.874 | 2.126 | 1.764 |
| 10-350349-363 | 36 | 1.378 | .921 | 2.122 | 2.248 | 2.031 |
| 10-350349-403 | 40 | 1.624 | 1.177 | 2.374 | 2.500 | 2.031 |

**Millimeters**

| B | | E ± 0.4 | F ± 0.2 | G + 0.5 – 0.0 |
|---|---|---|---|---|
| Open | Closed | | | |
| 7.93 | 2.38 | 19.0 | 22.6 | 32.3 |
| 11.12 | 5.84 | 22.2 | 25.8 | 32.3 |
| 13.48 | 8.00 | 25.4 | 28.1 | 32.3 |
| 15.87 | 9.60 | 28.5 | 31.0 | 35.3 |
| 19.00 | 11.30 | 33.3 | 37.3 | 35.7 |
| 23.80 | 15.50 | 39.6 | 42.0 | 38.5 |
| 31.75 | 23.40 | 47.6 | 54.0 | 44.8 |
| 35.00 | 23.40 | 53.9 | 57.1 | 51.6 |
| 41.25 | 29.90 | 60.3 | 63.5 | 51.6 |

All dimensions for reference only.

# GT – accessories

## rear mounting data, panel cut-out dimensions, sealing plugs, sealing ranges

### REAR MOUNTING DATA
### MAXIMUM PANEL THICKNESS

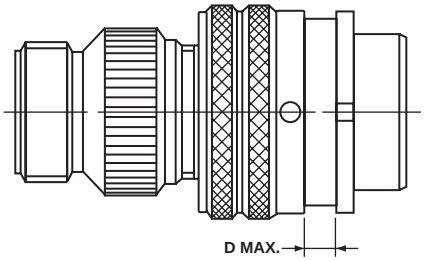


| Size | Dimension D | | | |
|---|---|---|---|---|
| | GT00/020 | | GT030 | |
| | Inches | (mm) | Inches | (mm) |
| 10SL | .146 | 3.70 | .303 | 7.70 |
| 14S | .146 | 3.70 | .303 | 7.70 |
| 16S | .146 | 3.70 | .303 | 7.70 |
| 16 | .145 | 3.70 | .242 | 6.15 |
| 18 | .145 | 3.70 | .303 | 7.70 |
| 20 | .145 | 3.70 | .303 | 7.70 |
| 22 | .145 | 3.70 | .303 | 7.70 |
| 24 | .207 | 5.25 | .303 | 7.70 |
| 28 | .207 | 5.25 | .343 | 8.70 |
| 32 | .241 | 6.10 | .309 | 7.85 |
| 36 | .241 | 6.10 | .309 | 7.85 |
| 40 | .237 | 6.02 | .309 | 7.85 |

### GROMMET HOLE
### SEALING RANGES

| Hole Size | Sealing Range | |
|---|---|---|
| | (mm) | Inches |
| 16 | 1.62 – 3.3 | .064 – .130 |
| 12 | 2.89 – 4.31 | .114 – .170 |
| 8 | 4.16 – 6.47 | .164 – .255 |
| 4 | 6.9 – 9.3 | .272 – .370 |
| 0 | 10.5 – 13.97 | .415 – .550 |

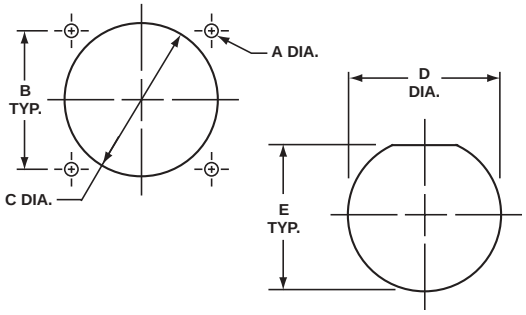


### PANEL CUT-OUT DIMENSIONS

| Shell Size | A Dia. Hole Size | Connector Styles | | | | |
|---|---|---|---|---|---|---|
| | | 02, 020, 00, 030 | Front Mount 02, 00, 020 | Rear Mount 030 | Jam Nut 070 | Jam Nut 070 |
| | | B ±.004 | C Dia. | C Dia. | D Dia. | E |
| 10SL | .126 | .717 | 11/16 | 1 3/4 | 7/8 | .83 |
| 14S | .126 | .906 | 13/16 | 1 | 1 1/8 | 1.08 |
| 16S/16 | .126 | .969 | 15/16 | 1 1/8 | 1 1/14 | 1.21 |
| 18 | .126 | 1.063 | 1 1/16 | 1 1/4 | 1 3/8 | 1.32 |
| 20 | .126 | 1.157 | 1 3/16 | 1 3/8 | 1 1/2 | 1.45 |
| 22 | .126 | 1.252 | 1 5/16 | 1 1/2 | 1 5/8 | 1.57 |
| 24 | .146 | 1.374 | 1 7/16 | 1 5/8 | 1 3/4 | 1.70 |
| 28 | .146 | 1.563 | 1 11/16 | 1 7/8 | 2 | 1.95 |
| 32 | .169 | 1.752 | 1 15/16 | 2 1/8 | 2 1/4 | 2.20 |
| 36 | .169 | 1.937 | 2 1/8 | 2 3/8 | 2 1/2 | 2.45 |
| 40 | .169 | 2.185 | 2 3/8 | 2 5/8 | 2 3/4 | 2.70 |

All dimensions for reference only.

### SEALING PLUG
### 10-405996-XX

Sealing plugs are used to fill unused holes in multi-holed grommet configurations.

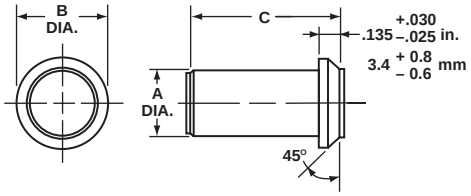


| Order No. | Contact Size | Wire Size | Color Code | Inches | | |
|---|---|---|---|---|---|---|
| | | | | A Dia. ±.010 | B ±.005 | C ±.010 |
| 10-405996-16 | 16 | 20-16 | Blue | .083 | .133 | .564** |
| 10-405996-12 | 12 | 14-12 | Yellow | .121 | .171 | .564** |
| 10-405996-8 | 8 | 10-8 | Red | .185 | .315 | .470 |
| 10-405996-4 | 4 | 4-6 | Blue | .310 | .415 | .470 |
| 10-405996-0 | 0 | 0-2 | Yellow | .440 | .605 | 1.000 |

| Millimeters | | |
|---|---|---|
| A Dia. ± 0.2 | B ± 0.1 | C ± 0.2 |
| 2.1 | 3.4 | 14.3*** |
| 3.1 | 4.3 | 14.3*** |
| 4.7 | 8.0 | 11.9 |
| 7.9 | 10.5 | 11.9 |
| 11.2 | 15.4 | 25.4 |

** ± .020 (in.)  *** ± 0.5 (mm)

# GT Connectors
## crimp contacts and application tools

Machined from copper alloys and silver or gold plated for maximum corrosion resistance, with a minimum millivolt drop and a maximum current carrying capacity, the size 16 and 12 socket contacts are of the closed entry design. Crimp contacts are available for all MS insert arrangements and are identified with an Amphenol® proprietary number.

**CRIMP CONTACTS**

| CRIMP CONTACT DATA | | | | | | APPLICATION TOOLS | | |
|---|---|---|---|---|---|---|---|---|
| PART NUMBER | | | | MATING SIZE | WIRE WELL | Crimp Tools | Positioner/ Die Set | Locator/ Color |
| PIN CONTACT | | SOCKET CONTACT | | | | | | |
| SILVER | GOLD("D") | SILVER | GOLD("D") | | | | | |
| 10-40553 | 10-597160-15D | 10-597109-161 | 10-597109-16D | 16S | 16-18-20 | Daniels AF8 or Equivalent | TH29-1 or Equivalent | Red |
| 10-606014-40 | 10-597160-40D | 10-597109-401 | 10-597109-40D | | 12-14 | | | |
| 10-606014-221 | 10-597160-19D | 10-597109-191 | 10-597109-19D | | 14-16 | | | |
| 10-606014-291 | 10-597160-34D | 10-597109-341 | 10-597109-34D | | 20-22 | | | |
| 10-606014-46 | 10-597160-46D | 10-597109-461 | 10-597109-46D | | 20-24 | | | |
| 10-40557 | 10-597160-16D | 10-597109-171 | 10-597109-17D | 16 | 16-18-20 | | | Pin - Blue Socket - Green |
| 10-606014-022 | 10-597160-22D | 10-597109-221 | 10-597109-22D | | 12-14 | | | |
| 10-606014-171 | 10-597160-17D | 10-597109-141 | 10-597109-14D | | 14-16 | | | |
| 10-606014-311 | 10-597160-33D | 10-597109-331 | 10-597109-33D | | 20-22 | | | |
| 10-606014-361 | 10-597160-36D | 10-597109-361 | 10-597109-36D | | 20-24 | | | |
| 10-606014-121 | 10-597160-12D | 10-597109-131 | 10-597109-13D | 12 | 12-14 | | | Green |
| 10-606014-231 | 10-597160-23D | 10-597109-231 | 10-597109-23D | | 8-10 | | | |
| 10-606014-251 | 10-597160-26D | 10-597109-261 | 10-597109-26D | | 10-12 | | | |
| 10-606014-271 | 10-597160-27D | 10-597109-271 | 10-597109-27D | | 14-16-18 | | | |
| 10-606014-261 | 10-597160-24D | 10-597109-241 | 10-597109-24D | | 18-20 | | | |
| 10-606014-201 | 10-597160-20D | 10-597109-201 | 10-597109-20D | | 20-22 | | | |
| 10-40792 | 10-597160-8D | 10-40793 | 10-597109-8D | 8 | 8 | Pico 400BHD | Pico 414DA-8N | Pico Pin - 4025 Socket - 4026 |
| 10-606014-41 | 10-597160-41D | 10-597109-411 | 10-597109-41D | | 6 | | | |
| 10-606014-321 | 10-597160-28D | 10-606015-321 | 10-597109-28D | | 10-12 | | | |
| 10-606014-381 | 10-597160-38D | 10-597109-381 | 10-597109-38D | | 12-14 | | | |
| 10-40564 | 10-597160-4D | 10-40565 | 10-597109-4D | 4 | 4 | | Pico 414DA-4N | Pico 4043 |
| 10-606014-58 | 10-597160-58D | 10-597109-581 | 10-597109-58D | | 6 | | | |
| 10-606014-331 | 10-597160-35D | 10-597109-351 | 10-597109-35D | | 8 | | | |
| 10-606014-44 | 10-597160-44D | 10-606015-441 | 10-597109-44D | | 10 | | | |
| 10-581806-000 | 10-597160-1D | 10-581808-000 | 10-597159-1D | 0 | 0 | | Pico 414DA-0N | Pico Pin - 4042-1 Socket - 4042 |
| 10-606014-341 | 10-597160-29D | 10-597109-291 | 10-597109-29D | | 0-2 | | | |
| 10-606014-351 | 10-597160-30D | 10-606015-351 | 10-597109-30D | | 4 | | | |
| 10-597276-48 | 10-597276-48D | 10-606015-48 | 10-597109-48D | 2/0 | 2/0 | Pico 500 | Pico 514DA2/0N | Pico Pin - 6490 |
| 10-597276-47 | 10-597276-47D | 10-606015-47 | 10-597109-47D | 4/0 | 4/0 | | Pico 514DA4/0N | Socket - 6491 |

See page 87 for further contact information applicable to both crimp and solder contacts.
Additional contact variations including thermocouple and RADSOK power contacts are available; consult Amphenol, Sidney, NY for information.

# GT Connectors
## solder contacts

Machined copper alloy contacts in a full range of sizes, with closed entry socket design in the size 12 and 16 contacts. A heavy silver-plated finish is deposited on all MS style solder contacts for maximum corrosion resistance, maximum current carrying capacity and low millivolt drop. Gold plated contacts are also available. (See how to order, pg. 88).

| Pin/ Socket | Mating End Size | Wire Barrel Size | Allowable Wire Size | Test Current** Amps |
|---|---|---|---|---|
| Pin<br>Socket | 16 Short† | 16 | 16<br>18<br>20<br>22 | 13<br>10<br>7.5<br>5 |
| Pin<br>Socket | 16 Long | 16 | 16<br>18<br>20<br>22 | 13<br>10<br>7.5<br>5 |
| Pin<br>Socket | 12 | 12 | 12<br>14 | 23<br>17 |
| Pin<br>Socket | 8 | 8 | 8<br>10 | 46<br>33 |
| Pin<br>Socket | 4 | 4 | 4<br>6 | 80<br>60 |
| Pin<br>Socket | 0 | 0 | 0<br>1<br>2 | 150<br>125<br>100 |

** Contact ratings as stated are test ratings only. The connector may not withstand full rated current through all contacts continuously. Please note that the electrical data given is not an establishment of electrical safety factors. This is left entirely in the designer's hands as he can best determine which peak voltage, switching surges, transients, etc. can be expected in a particular circuit.

† The 10SL, 14S and 16S connectors require short contacts.

### Table I
### MIL-SPEC CONTACT ARRANGEMENT SERVICE RATING

| MS Service Rating | Recommended Operating Voltage* at Sea Level | | Effective Creepage Distance Nom. | Mechanical Spacing Nom. |
|---|---|---|---|---|
| | DC | AC (RMS) | | |
| Inst. | 250 | 200 | 1/16 | |
| A | 700 | 500 | 1/8 | 1/16 |
| D | 1250 | 900 | 3/16 | 1/8 |
| E | 1750 | 1250 | 1/4 | 3/16 |
| B | 2450 | 1750 | 5/16 | 1/4 |
| C | 4200 | 3000 | 1 | 5/16 |

* The values listed in Table I represent operating values which include a generous safety factor. It may be necessary for some applications to exceed the operating voltages listed here. If this is necessary, designers will find Table II useful for determining the degree to which the recommended values of Table I can be exceeded.

### Table II
### ALTITUDE VOLTAGE DERATING** CHART

| MS Service Rating | Nominal Distance | | Standard Sea Level Conditions | | Pressure Altitude † 50,000 Feet | | Pressure Altitude † 70,000 Feet | |
|---|---|---|---|---|---|---|---|---|
| | Airspace | Creepage | Minimum Flashover Voltage AC (RMS) | Test Voltage AC (RMS) | Minimum Flashover Voltage AC (RMS) | Test Voltage AC (RMS) | Minimum Flashover Voltage AC (RMS) | Test Voltage AC (RMS) |
| Inst. | 1/32 | 1/16 | 1400 | 1000 | 550 | 400 | 325 | 260 |
| A | 1/16 | 1/8 | 2800 | 2000 | 800 | 600 | 450 | 360 |
| D | 1/8 | 3/16 | 3600 | 2800 | 900 | 675 | 500 | 400 |
| E | 3/16 | 1/4 | 4500 | 3500 | 1000 | 750 | 550 | 440 |
| B | 1/4 | 5/16 | 5700 | 4500 | 1100 | 825 | 600 | 480 |
| C | 5/16 | 1 | 8500 | 7000 | 1300 | 975 | 700 | 560 |

† Not corrected for changes in density due to variations in temperature

** No attempt has been made to recommend operating voltages. The designer must determine his own operating voltage by the application of a safety factor to the above derating chart to compensate for circuit transients, surges, etc.

# Amphenol® GT Connectors
## how to order, connector intermateability

**Part Number System**

| GT | C | 00 | A | FF | 36-5 | P | W | (014) |
|---|---|---|---|---|---|---|---|---|
| | 1 | 2 | 3 | 4 | 5 | 6 | 7 | 8 |

**1. Contact Style and Insert Material**

C = Crimp
CN = Crimp with stainless steel
S = Solder
SN = Solder with stainless steel
CY = Crimp with Viton
SY = Solder with Viton
CL = Crimp with low smoke/flame retardant inserts
SL = Solder with low smoke/flame retardant inserts
No designation required for Neoprene components

**2. Shell Style**

00 - Wall mount receptacle
01 - Inline receptacle
02 - Box mount receptacle
020 - Box mount receptacle with accessory threads
030 - Square flange receptacle - rear panel mount
05 - Dummy receptacle
06 - Straight plug
062 - Straight plug with deep serrated coupling nut*
064 - Panel mounted plug with heavy duty coupling nut
065 - Straight plug with long heavy duty coupling nut
07 - Jam nut receptacle - rear panel mount
070 - Jam nut receptacle with accessory threads
08 - 90° angle plug
TB - Thru-bulkhead

**3. Connector Class - For details, see pages 29-78**

A - Adapter for accessory attachment, non-environmental
AF - Adapter, clamp for individual wires, non-environmental
CF - Adapter, jacketed cable clamp, environmental
CFGG - Adapter, jacketed cable clamp, over molded coupling nut, environmental
CFZ - Adapter, jacketed cable clamp, individual wire sealing grommet, environmental
F - Adapter, clamp for individual wires, individual wire sealing grommet, environmental.
G - Adapter for heat shrink tubing, individual wire sealing grommet, environmental
G2 - Free turning adapter for heat shrink tubing, individual wire sealing grommet, environmental
GTTB - Thru bulkhead receptacle, accepts mating plug on both sides
LC - Long adapter, backshell with jacketed cable basket weave grip, with individual wire sealing grommet, environmental
LCF - Long adapter, jacketed cable clamp, environmental
LCFZ - Long adapter, jacketed cable clamp, individual wire sealing grommet, environmental
LT - Adapter, backshell for terminating metallic core conduit
PFC - Adapter, backshell for plastic corrugated conduit, individual wire sealing grommet, environmental
PG - Long adapter with PG threads, individual wire sealing grommet, environmental
PP - Panel mounted plug
R - Adapter for accessory attachment, individual wire sealing grommet, environmental
R - (02/03) No thread, no accessories, environmental with panel sealing gasket
R - (020) No accessories, environmental with panel sealing gasket
RFS - (02) No accessories, countersunk mounting holes for use with over molded coupling nut, environmental with panel sealing gasket
RFSM - (020) No accessories, countersunk mounting holes for use with over molded coupling nut, environmental with panel sealing gasket
RV - Adapter, individual wire sealing grommet, environmental
SB - Adapter for termination of EMI/RFI shielded braid with heat shrink tubing or boot, individual wire sealing grommet, environmental
SBT - Adapter for termination of EMI/RFI shielded braid with heat shrink tubing or boot, individual wire sealing grommet, environmental
SL - Long adapter, jacketed cable liquid tight strain relief, environmental

**4. Designation for Mounting Hole - Receptacle Only**

FF - UN Threads
FM - Metric Threads
No designation for standard through hole mounting holes.

**5. Shell Size and Arrangement**

See pages 2–4

**6. Contact Style**

P designates pin contacts
S designates socket contacts

**7. Alternate Position**

W, X, Y and Z - See page 5.
No suffix required for normal position.

**8. Connector Modification***

Omit for standard olive drab with silver plated contacts
i.e.: (014) Olive drab cadmium plate, nickel base
(B30) gold/nickel plated contacts
(025) Black zinc cobalt
(027) Conductive black zinc cobalt
(024) Green zinc cobalt
(LC) Less contacts

* Consult Amphenol, Sidney, NY

**MATEABILITY WITH IDENTICAL CONTACT ARRANGEMENTS**

| Connector Style | Mateable with Style |
|---|---|
| GT00 | GT06 / 062 / 064 / 065 / 08 |
| GT01 | GT06 / 062 / 064 / 065 / 08 |
| GT02 | GT06 / 062 / 064 / 065 / 08 |
| GT020 | GT06 / 062 / 064 / 065 / 08 |
| GT030 | GT06 / 062 / 064 / 065 / 08 |
| GT06 / 062 / 064 / 065 | GT00 / 01 / 02 / 020 / 03 / 030 / 05 / 070 / TB |
| GT07 / 070 | GT06 / 062 / 064 / 065 / 08 |
| GT08 | GT00 / 01 / 02 / 020 / 03 / 030 / 05 / 070 / TB |
| GTTB | GT06 / 062 / 064 / 065 / 08 |

# **Amphenol® GT Connectors**
# with RADSOK technology

Amphenol offers Amphe-Power Connectors, high amperage capability connectors designed for the most demanding industrial and transportation applications. The GT connectors, in most shell styles, can be enhanced with RADSOK contacts that handle up to 150% higher amperages than standard contacts.

The RADSOK contact is a hyperbolic, stamped grid configuration within the socket. As male pin is inserted, axial members in the female half deflect, imparting high current flow across the connection with minimal voltage loss. This design ensures a large, coaxial, face-to-face surface area engagement and provides higher current capacity with minimized temperature rise. The RADSOK's strongest benefit is its very low mill-volt drop because of the intimate contact provided by the spring force of the grid. RADSOK contacts are available in size 8 (69 amps), size 4 (120 amps), and size 0 (250 amps). Current Amphe-Power lines support from 50A to 500A continuous duty. Hybrid arrangements with RADSOK and power contacts can be tailored to meet customer needs.

For more information on GT Amphe-Power Connectors, request Brochure SL-391.

### The RADSOK Contact Advantage:

- Low contact Resistance
- Low milli-volt drop performance
- Higher current capacity with minimized temperature rise.
- Reliability under vibration and shock.
- High quality, consistency and lower cost

### Amphe-Power™ Amphe-GTR

The Amphe-Power™ GT series provides the benefit of a GT connector in a high performance composite material. The GT-R is listed to UL/CUL 2238 Standard, Control Number 19VP. It also meets all of the specifications for high power process control and server applications. Performance level is the same as that of the GT series. RADSOK contacts enable an increased current rating of 120A on individual contacts, and a standard PG thread achieves an IP67 seal rating.

Compression (setscrew) wire termination to the 4/6AWG or 8/10AWG conductors allows for easy field replacement of pin or socket contacts. It also provides for easy complete plug or receptacle assemblies, all without a need for specialized tooling.

### Power GT

The Power GT is a modification to the GT series incorporating three 8.0mm RADSOK contacts mounted in a common termination to busbar or cable, enhanced to an ultra-high current density in a compact shell size 28 layout. This design created the first TUV "finger-proof" 500A connector in the marketplace with the "dead-front" pin design to prevent contact with live circuits. In environmental versions, this connector achieves IP67 performance.

The ninety-degree wire orientation on the plug provides low-profile mounting for tight packaging requirements. This plug is designed to be over-molded, and can also be fitted with mechanical hardware for individual requirements.

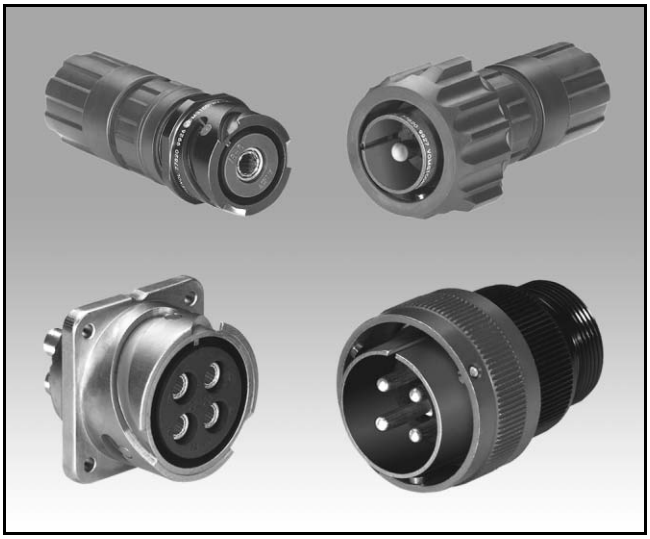

*Amphenol ®GT Amphe-Power Connectors with RADSOK ® high amperage contacts*

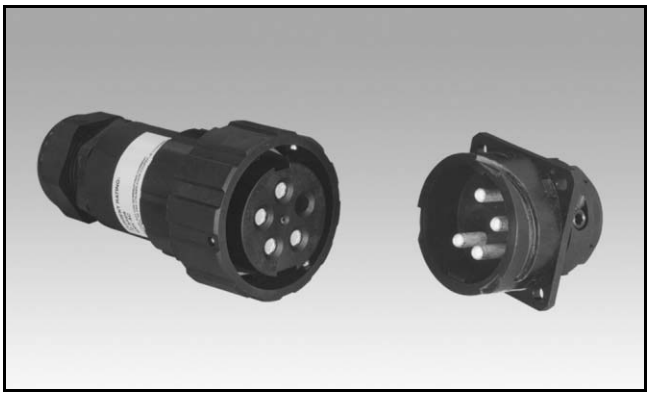

*Amphe-Power Composite GTR Connector*

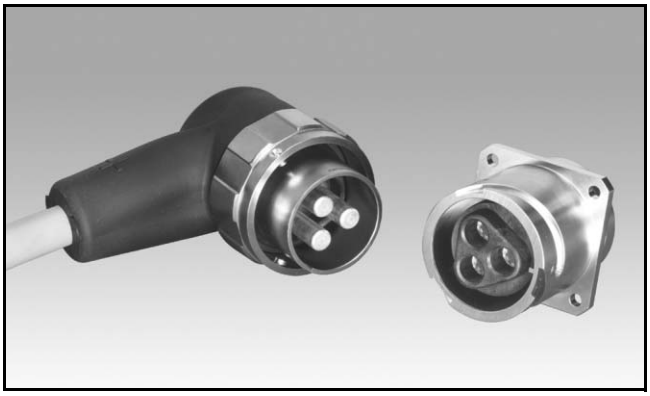

*Power GT, Finger-Proof 500A Connector*

# Amphenol® GT Connectors
## special applications

### GTC-M Series - The GT with Metal Clip Inserts

Amphenol's GTC-M series combines the GT reverse bayonet connector and the rear release metal clip retention system which is used in the Amphenol®/Matrix® MIL-C-5015 connector line. Another benefit is the captivated coupling nut assembly which allows unmating without the rear accessories attached.

Improved environmental sealing is achieved with this series. The crimp joint is covered by a three-webbed fluorinated silicone grommet that seals on the wires without the necessity of an additional sealing clamp. An interfacial seal with conical towers on the pin insert matches with recesses on the socket; a match that provides the popular "cork and bottle" seal during mating. The grommet and the interfacial seal provides adequate sealing during environmental extremes. The GTC-M series is intermateable and intermountable with the standard GT series, and it uses standard M85049 style rear accessories. For more information on the GTC-M Series, request Product Data Sheet #181.

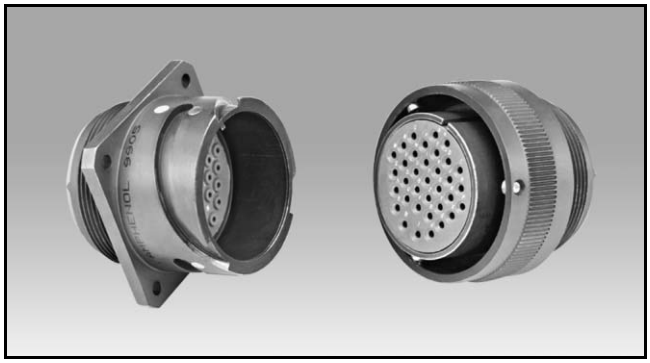

*Amphenol ® GTC-M with Metal Clip Inserts*

### GT-PC Connectors for High Voltage Power Applications

The Amphenol® GT-PC connectors were developed for use in the High Voltage Power Distribution industry. Incorporating all the standard features of the popular GT series, these connectors will prevent accidental electrical shocks to the technicians. "Dead Front" pin contacts in size 0 are recessed into a socket insert, preventing inadvertent contact with a live circuit. Higher amperage levels are provided - up to 100 amps per contact. The GT-PC series has been UL approved. "First Mate - Last Break" features on one or more of the pins provide an additional measure of operator safety. Currently there are 5 insert patterns available. Consult Amphenol Industrial Operations for more information.

*Amphenol ® GT-PC Connectors for High Voltage Power Applications*

### GT Connectors for the HMI Lighting Industry

Amphenol provides GT connectors for the rugged use experienced during stage shows and other entertainment events, even outside in the elements. The same 3-point bayonet coupling system and the same ruggedness to survive 2000 mating cycles are provided. The unique features of this connector series include color-coded receptacle shells with matching backshells on the cable plugs. The colors can be matched to specific wattage cables and/or light systems. A wide selection of environmental adapters designed to seal on the outside diameter of specific cable diameters can be fitted to the backshells. Applications for these connectors include power and control of lighting trusses, and portable power and dimmer racks. For more information request Product Data Sheet #174.

*Amphenol ® GT Connectors for the HMI Lighting Industry*

# **Additional Amphenol Industrial Connectors** for the Rail Industry

### ARCL Series

Amphenol has developed a heavy duty 5015 type connector with 38999 Series III type coupling for use in mass transportation and heavy equipment applications. The ARCL Series has the same electrical characteristics as 5015 standard product but it has rugged ratchet double start stub threads. These rugged double stub threads eliminate mis-mating and provide for easy cleaning.

Other features/benefits of the ARCL connector series:

- 5 key/keyway alignment feature.
- Operating temperature is from –55°C to +125°C. Operating voltage is to 3000 VAC (RMS) at sea level.
- Crimp and solder termination available.
- 5 shell styles with all the 5015 insert patterns available.
- Supplied with low smoke, low halogen inserts which are flame retardant, but also can be supplied with standard 5015 inserts.
- Wide variety of backend accessories for all styles of cable and conduit, and a variety of cable strain reliefs including over-molding and heat shrink boots.
- RADSOK high amperage sockets can be incorporated.

### Star-Line® Series

Amphenol/Pyle Star-Line Series is another heavy duty environmental cylindrical connector widely used in mass transportation and in the oil exploration market. Ideal for high amperage and high density control and instrumentation applications, this series has features and benefits as follows;

- Hard anodic coating for dielectric strength with heat and corrosion resistance.
- Operating temperature is from –67°F to +257°F. Amperages up to 1135 amps at 1000VAC or DC rating available.
- Double lead Acme threads provide complete coupling in one turn of the coupling nut, and do not clog under adverse weather conditions.
- Solder, crimp and pressure terminals; circuit breaking power and control types available.
- UL listed and CSA listed for circuit breaking capability.
- 5 shell styles with over 150 insert patterns.
- 3 retention styles with captive contacts or insertable/removable contacts.
- Variety of backend accessories including basketweave cable grips, straight or angled adapters and receptacles mounted to junction boxes.

### Over-Molded Cable

Cables can be designed with custom overmold to Amphenol Industrial cylindrical connectors for almost any application in mass transportation or any other types of industrial markets. Overmold seals to the rear of the connector and to the cable jacket to provide moisture sealing. Cables may be designed to meet any environmental performance requirement and any electrical performance requirement. Variety of materials are available: neoprene, hypalon and others.

Consult Amphenol Industrial Operations for further information on these industrial products.

*Amphenol ® ARCL Series*

*Amphenol® Star-Line® Series*

*Over-Molded Cable for Industrial Connectors*

# Additional Amphenol Industrial Products
for the Rail Industry, cont.

### Trans-Power® Connectors

Amphenol/Pyle provides head-end power connectors for commercial rail systems. These meet Amtrak specification D-77-24, APTA #RP-E-016. Features and benefits include:

- Slip-fit, double seated for environmental protection.
- Retention by receptacle cover or optional accessories.
- Crimp termination per Amtrak and APTA specifications.
- Socket contacts provide uniform pressure for low mating and unmating forces, low voltage drop, consistently low temperature rise and shock resistance.
- Operating ambient temperature is –57°F to +110°F. Electrical performance up to 600 volts, 400 Amps.
- All molded elastomeric rubber body on jumper. Raintight per U/L standard.

*Amphenol ® Trans-Power® Connectors for Rail Mass Transit*

### 27 Pole Train-line Receptacles and Jumpers

Amphenol/Pyle 27 pole MU (multiple unit) and communication receptacles and jumpers are provided for rail applications. Jumpers are either standard car to car, between locomotives or between locomotives and lead cars. These products are designed to Amtrak and APTA specifications. Other design features and benefits:

- Locomotive jumpers are keyed differently from all other 27 pole jumpers to prevent mis-mating. They also have identification markings to distinquish their proper usage on locomotives.
- Receptacles are a rugged aluminum housing with a spring loaded cover. Receptacles can be provided with or without leads.
- Push-pull mating.

*Amphenol® 27 Pole Train-line Receptacle and Jumpers for Rail Mass Transit*

### Amphe-Y Composite Molded Connectors

The Amphe-Y is a new Amphenol product for mass transit application that uses RADSOK high amperage sockets. It is a molded interconnect system that provides rapid and safe connect and disconnect for traction motor installation and repair.

This packaging solution consists of a molded base plate, a silver-plated copper “connector” with RADSOK contacts, and a molded top cover. When attached to the traction motor, this unit creates a safe, reliable and efficient means of conducting high amperage current from the third rail or catenary to the propulsion controller. Each “leg” of this assembly can safely accommodate up to 1000 amps through the 18mm RADSOK contacts.

Amphenol has wide capabilities in designing specialty molded interconnect solutions, such as the new Amphe-Y, for power and/or harsh environment applications. Custom designs can include bayonet, theaded or push-pull coupling with crimp solder or pressure termination. They can utilize RADSOK or standard contacts and can be designed to meet specific environmental sealing requirements and temperature ratings.

*Amphe-Y Molded Interconnect System for Rail Mass Transit*

Consult Amphenol Industrial Operations for further information on these industrial products.

**AMPHENOL CORPORATION**
**Amphenol Industrial Operations**
40-60 Delaware Avenue
Sidney, New York 13838-1395
Phone: 800-678-0141 or 607-563-5011
**www.amphenol-industrial.com**