GCU500 Series

XP Power

AC-DC POWER SUPPLIES

250W CONVECTION COOLED | 500W FAN COOLED

The GCU500 is packaged in a 3.3" x 6.5" x 1.55" package and achieves EN55011/32 Level B conducted emissions compliance whilst maintaining very low earth leakage currents, making it suitable for a wide range of 1U and other industrial, IT and medical applications.

The series has single output versions from 12V to 48VDC, dual-fusing for compliance with IEC60601-1 and features minimal waste heat as efficiencies reach 93%. The GCU500 delivers up to 500W of power over an operating range of -40°C to +70°C and offers remote on/off control and power fail signal along with 5V standby and fan supplies.

Features

- 250W Convection & 500W Forced-cooled Ratings
- 5V Standby Output
- Universal 80-264VAC Input
- IT & Medical Safety Approvals
- -40°C to +70°C Operation
- Power Fail, Remote On/Off & Remote Sense
- Class B Emissions
- 3 Year Warranty

Applications

Healthcare
Industrial Electronics
Instrumentation
Medical Diagnostic
Security
Technology

Dimensions

GCU500:
3.30 x 6.50 x 1.55" (83.8 x 165.1 x 39.3 mm)
GCU500-EF:
3.30 x 8.24 x 1.64" (83.8 x 209.3 x 41.7 mm)

Models & Ratings

Model Number[2]	Output Voltage V1	Output Current V1		V Standby Output	V Fan Output[1]	Max Output Power
		Convection-cooled	Forced-cooled & End Fan Version[3]			
GCU500PS12	12.0VDC	20.8A	41.7A	5.0VDC/0.2A	12.0VDC/0.5A	500W
GCU500PS15	15.0VDC	16.7A	33.4A	5.0VDC/0.2A	12.0VDC/0.5A	500W
GCU500PS18	18.0VDC	12.5A	27.8A	5.0VDC/0.2A	12.0VDC/0.5A	500W
GCU500PS24	24.0VDC	10.4A	20.8A	5.0VDC/0.2A	12.0VDC/0.5A	500W
GCU500PS36	36.0VDC	6.9A	13.9A	5.0VDC/0.2A	12.0VDC/0.5A	500W
GCU500PS48	48.0VDC	5.2A	10.4A	5.0VDC/0.2A	12.0VDC/0.5A	500W

Notes:

1. Overall Vfan tolerance 10.8-13.2V
2. For end fan version add suffix -EF to model number.
3. Forced cooling requires 10CFM.

Summary

Characteristic	Minimum	Typical	Maximum	Units	Notes & Conditions
Input Voltage - Operating	80	115/230	264	VAC	Derate output power <90VAC. See fig 1, 300VAC for 5s
No Load Input Power			1	W	115VAC (when inhibited)
			6		230VAC
Efficiency		92		%	230VAC Full load
Operating Temperature	-40		+70	°C	See derating curve, fig. 9 & 10
EMC	EN55032 Level B Conducted & Radiated				
Safety Approvals	IE60950-1, IEC62638-1, EN62368-1, UL62368-1, CSA 22.2 No.6238-1, IEC60601-1, EN60601-1, ANSI/AAMI ES60601-1, CSA22.2 No.60601-1, LVD & RoHS, Equipment Protection Class I				
Weight		1.35 (612)		lb (g)	
		1.65 (748)			

Input

Characteristic	Minimum	Typical	Maximum	Units	Notes & Conditions
Input Voltage - Operating	80	115/230	264	VAC	Derate output power <90VAC. See fig 1, 300VAC for 5s
Input Frequency	47	50/60	63	Hz	
Power Factor		>0.9			230VAC, 100% load
Input Current - Full Load		5.2/2.7		A	115/230VAC
Inrush Current			60	A	264 VAC cold start 25°C
Earth Leakage Current			270	µA	264VAC/60Hz
No Load Input Power			1	W	115VAC (when inhibited)
			6		230VAC
Input Protection	F8A/250V internal fuse in both lines				

Input Voltage Derating Curve

Figure 1

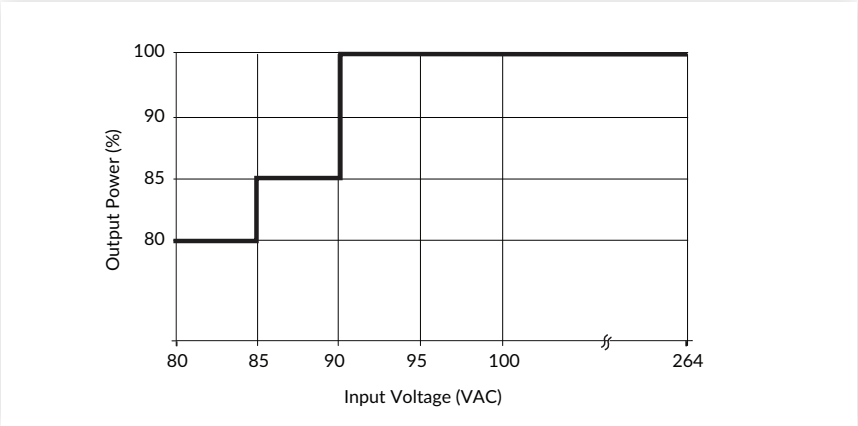

Output

Characteristic	Minimum	Typical	Maximum	Units	Notes & Conditions
Output Voltage - V1	12		48	VDC	See Models & Ratings table
Initial Set Accuracy			±1(V1) & ±3(VStby)	%	50% load, 115/230VAC
Output Voltage Adjustment - V1	±2			%	Via potentiometer. See mechanical details, Vfan will track
Minimum Load	0			A	No minimum load required
Start Up Delay		1	2	s	115/230VAC, full load
Hold Up Time	10			ms	115/230VAC, full load
Drift			±0.2	%	After 20 min warm up
Line Regulation			±0.5	%	90-264VAC
Load Regulation			±0.5	%	0-100% load
Transient Response			4	%	Recovery within 1% in less than 500µs for a 50-75% and 75-50% load step
Over/Undershoot			5	%	Turn On/Turn Off
Ripple & Noise - V1 & V Standby			1	% pk-pk	20MHz bandwidth
Overvoltage Protection - V1	110		140	%	Vnom DC. Output 1, recycle input to reset
Overload Protection	110		150	% I nom	V1 - Trip and Restart/Hiccup mode
	0.8		1.2	A	VStandby - Trip and Restart/Hiccup mode
					VFan - Resetting. Fuse rated at 1.3A at 25°C
Short Circuit Protection					Continuous, no damage
Temperature Coefficient			0.02	%/°C	
Overtemperature Protection				°C	Measured internally, auto resetting
Remote Sense	Compensates for 0.25V per lead, 0.5V total.				

General

Characteristic		Minimum	Typical	Maximum	Units	Notes & Conditions
Efficiency			92		%	230VAC Full load
Isolation: Input to Output		4000			VAC	2 x MOPP
Input to Ground		1500			VAC	1 x MOPP
Output to Ground		500			VDC	
Switching Frequency		50		500	kHz	PFC converter
		65		150		Main converter
Power Density				15	W/in³	
Mean Time Between Failure			370		khrs	MIL-HDBK-217F, Notice 2 +25°C GB
Weight	Open Frame		1.35 (612)		lb (g)	U Channel
	End Fan Unit		1.65 (748)			End Fan

Efficiency Graphs

Efficiency vs Load

Figure 2
GCU500PS12

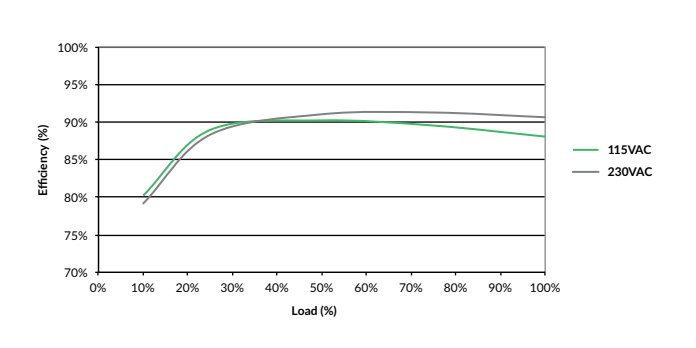

Figure 3
GCU500PS24

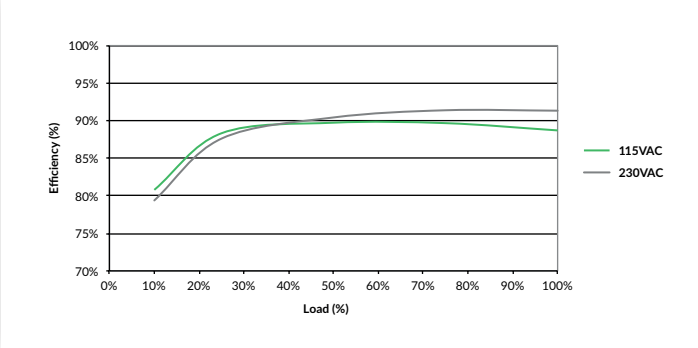

Figure 4
GCU500PS48

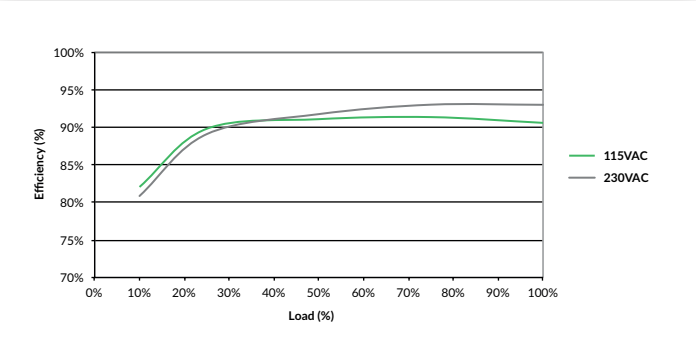

Signals & Controls

Characteristic		Notes & Conditions
Conducted		TTL Compatible, pin 6. Provides ≥5ms warning of loss of output from AC failure.
Standby Supply		5VDC/0.2A referenced to -Vout supply present when AC applied.
Remote On/Off (-R models)	Inhibit	The inhibit lo, should be pulled below 0.4V to switch V1 & Vfan off. Open circuit or >4V to switch on (see fig. 7)
	Enable	With the inhibit lo (pin 4) pulled low as detailed above, connecting inhibit HI to inhibit LO will enable V1 & V fan output. (see fig. 8)
Remote Sense		Compensates for 0.25V per lead, 0.5V total

Remote On/Off (Inhibit)

Figure 6

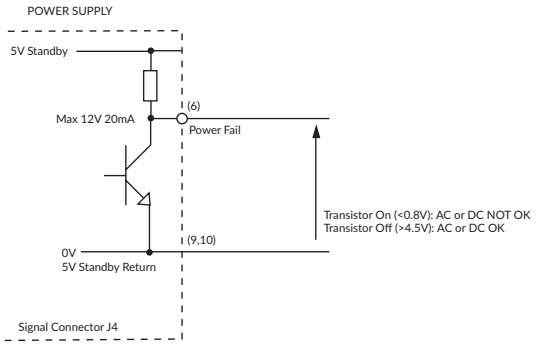

Remote On/Off (Inhibit)

Figure 7

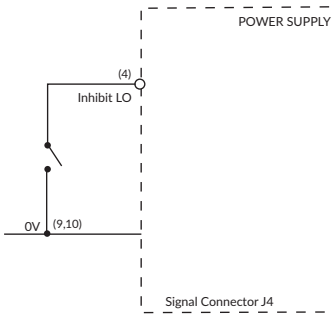

Remote On/Off (Enable)

Figure 8

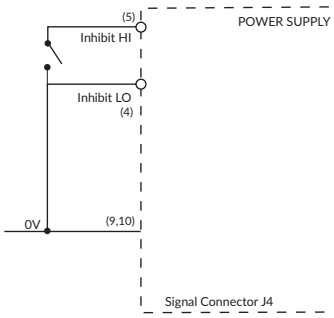

Environmental

Characteristic	Minimum	Typical	Maximum	Units	Notes & Conditions
Operating Temperature	-40		+70	°C	See derating curves, fig. 9 & 10
Storage Temperature	-40		+85	°C	
Cooling	10			CFM	Forced-cooled >180W
Humidity	5		95	%RH	Non-condensing
Operating Altitude			4000/5000	m	Medical/ITE
Transport Altitude			10000	m	
Shock	3 x 30g shocks in each plane, total 18 shocks. 30g = 11ms (±0.5msec), half sine. Conforms to EN60068-2-27 & EN60068-2-47				
Vibration	Single axis 10-500 Hz at 2g sweep and endurance at resonance in all 3 planes. Conforms to EN60068-2-6				

Temperature Derating Curve

Figure 9
Convection-cooled

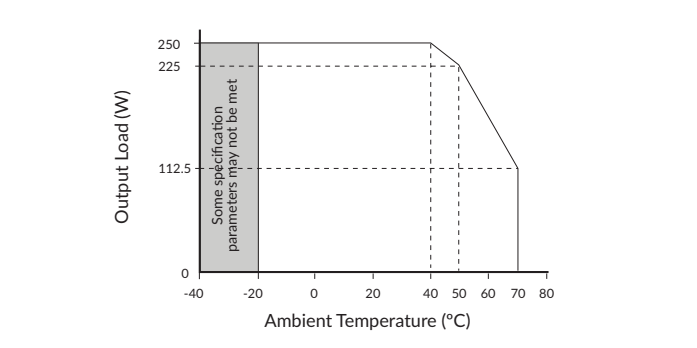

Figure 10
Forced-cooled 10 CFM & -EF versions

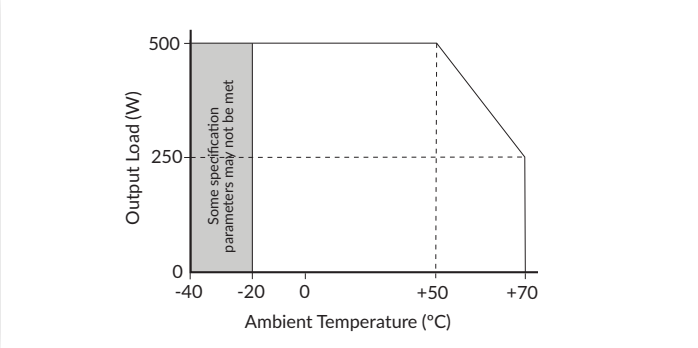

EMC: Emissions

Phenomenon	Standard	Test Level	Notes & Conditions
Conducted	EN55011/32	Class B	
Radiated	EN55011/32	Class A	Class B with 2T on Fair-Rite 2643800502 on output cable
Harmonic Currents	EN61000-3-2	Class A	
Voltage Flicker	EN61000-3-3		

EMC: Immunity

Phenomenon	Standard	Test Level	Criteria	Notes & Conditions
Low Voltage PSU EMC	EN61204-3	High severity level	as below	
Harmonic Current	EN61000-3-2	Class A	A	All models
		Class C		>270W
Radiated	EN61000-4-3	3	A	
EFT	EN61000-4-4	3	A	
Surges	EN61000-4-5	Installation class 3	A	
Conducted	EN61000-4-6	3	A	
Dips and Interruptions	EN61000-4-11 (100 VAC)	Dip 100% (0VAC), 8.4ms	A	
		Dip 100% (0VAC), 16.7ms	B	
		Dip 60% (40VAC), 200ms	B	
		Dip 30% (70VAC), 500ms	B	
		Dip 20% (80VAC), 5000ms	B	
		Int 100% (0VAC), 5000ms	B	
	EN61000-4-11 (240 VAC)	Dip 100% (0VAC), 10ms	A	
		Dip 100% (0VAC), 20ms	B	
		Dip 60% (96VAC), 200ms	B	
		Dip 30% (168VAC), 500ms	B	
		Dip 20% (192VAC), 5000ms	B	
		Int 100% (0VAC), 5000ms	B	
	EN60601-1-2 (100 VAC)	Dip 100% (0VAC), 10ms	A	
		Dip 60% (40VAC), 100ms	A	<180W
		Dip 30% (70VAC), 500ms	A	
		Int 100% (0VAC), 5000ms	B	
	EN60601-1-2 (240 VAC)	Dip 100% (0VAC), 10ms	A	
		Dip 60% (96VAC), 100ms	A	
		Dip 30% (168VAC), 500ms	A	
		Int 100% (0VAC), 5000ms	B	
	SEMI F47 (100VAC)	Dip 33% (70VAC), 500ms	A	

Safety Approvals

Certification	Standard	Notes & Conditions
CB	IEC62368-1 Ed 2	Information Technology
	IEC60950-1	Information Technology
	IEC60601-1 Ed 3 Including Risk Management	Medical
UL	UL62368-1, CSA 22.2, No.62368-1	Information Technology
	ANSI/AAMI ES60601-1:2005 & CSA C22.2, No.60601-1:08	Medical
TUV	EN62368-1	Information Technology
	EN60601-1/2006	Medical
Equipment Protection Class	Class I	
CE	Meets all applicable directives	
UKCA	Meets all applicable legislation	
Isolation	**Means of Protection**	**Category**
Primary to Secondary	2 x MOPP (Means of Patient Protection)	IEC60601-1 Ed 3
Primary to Earth	1 x MOPP (Means of Patient Protection)	
Secondary to Earth	N/A	

Mechanical Details

GCU500PS12-PS18 U-Channel

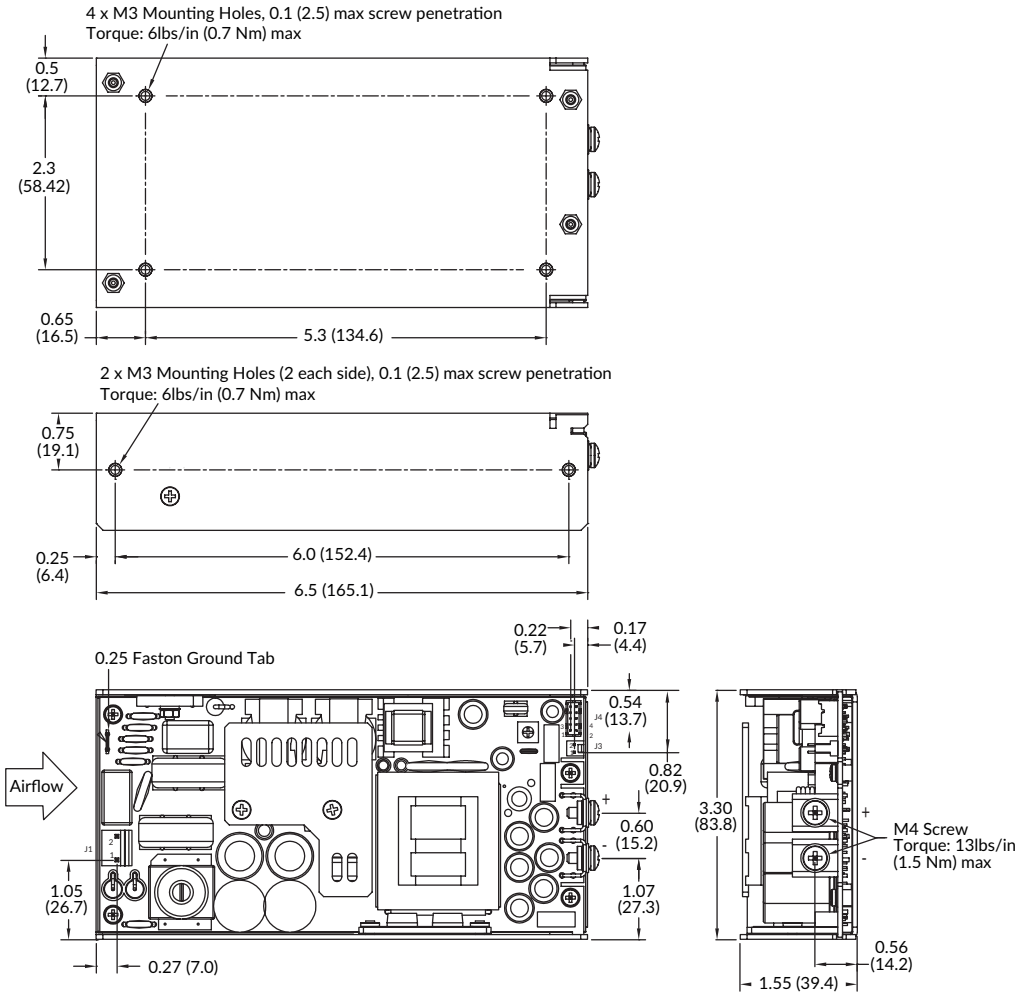

Input Connector J1 Molex pn. 09-65-2038	
Pin	Function
1	Line
2	Neutral

Output Connector Screw Terminal Bus Bar M4 Screw	
Bar	Single Output
+	+V1
-	RTN

Fan Connector J3 Molex pn. 22-04-1021	
Pin	Function
1	Fan + (12V)
2	Fan -

Signal Connector J4 JST PN S10B-PHDSS			
Pin	Single	Pin	Single
1	+Sense	7	+V Standby
2	-Sense	8	+V Standby
3	N/C	9	-V Standby
4	Inhibit LO	10	-V Standby
5	Inhibit HI		
6	P OK		

Notes:

1. All dimensions in inches (mm).
2. Tolerance .xx = 0.02 (0.50); .xxx = 0.01 (0.25)
3. J1 mates with MOLEX housing PN 09-50-1031 and with MOLEX series 5194 crimp terminals. J4 mates with JST housing pn PHDR-10VS and with JST SPHD-001T-P0.5 crimp terminals. J3 mates with MOLEX housing pn 22-01-1024 and with MOLEX series 5103 crimp terminals.

Mechanical Details

GCU500PS24-PS48 U-Channel

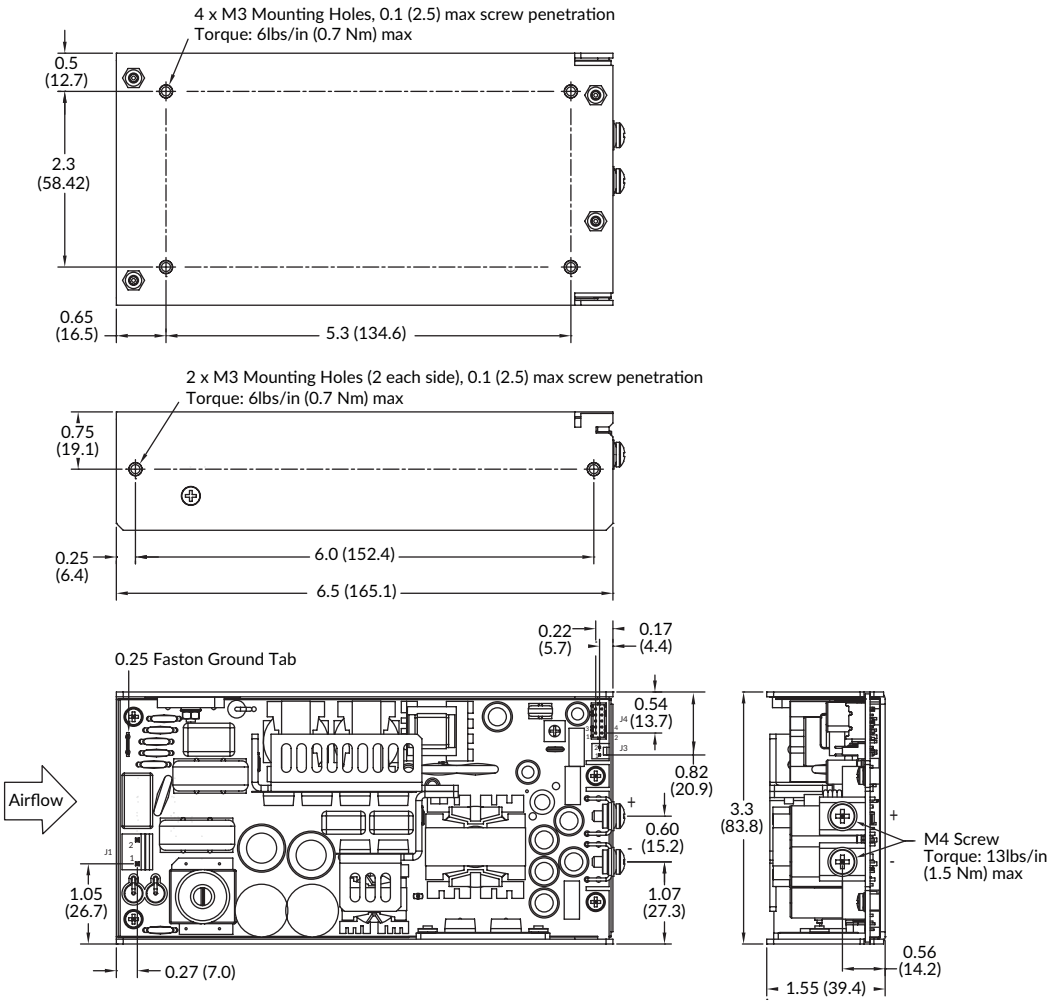

Input Connector J1 Molex pn. 09-65-2038	
Pin	**Function**
1	Line
2	Neutral

Output Connector Screw Terminal Bus Bar M4 Screw	
Bar	**Single Output**
+	+V1
-	RTN

Fan Connector J3 Molex pn. 22-04-1021	
Pin	**Function**
1	Fan + (12V)
2	Fan -

Signal Connector J4 JST PN S10B-PHDSS			
Pin	**Single**	**Pin**	**Single**
1	+Sense	7	+V Standby
2	-Sense	8	+V Standby
3	N/C	9	-V Standby
4	Inhibit LO	10	-V Standby
5	Inhibit HI		
6	P OK		

Notes:

1. All dimensions in inches (mm).
2. Tolerance .xx = 0.02 (0.50); .xxx = 0.01 (0.25)
3. J1 mates with MOLEX housing PN 09-50-1031 and with MOLEX series 5194 crimp terminals. J4 mates with JST housing pn PHDR-10VS and with JST SPHD-001T-P0.5 crimp terminals. J3 mates with MOLEX housing pn 22-01-1024 and with MOLEX series 5103 crimp terminals.

Mechanical Details

End Fan (-EF suffix)

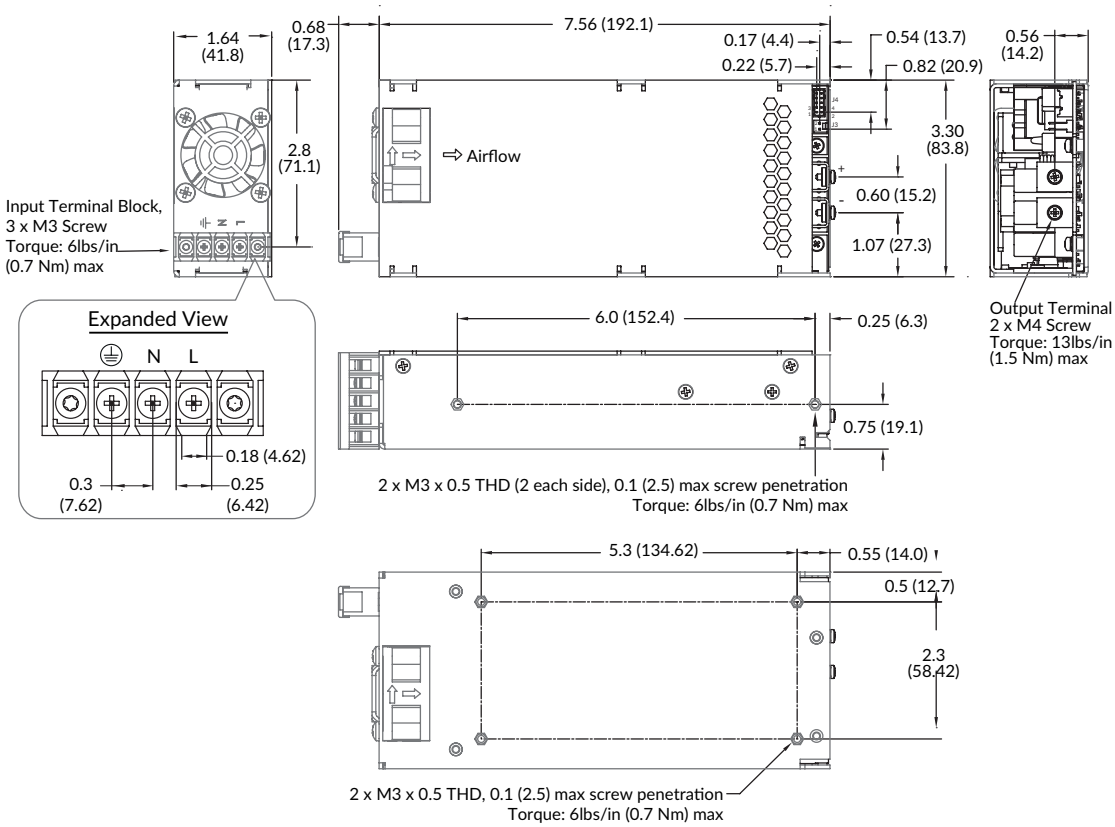

4 x M3 Mounting Holes, 0.1 (2.5) max screw penetration

Input Terminal Block Dinkle P/N DT-2C-A02W-03	
Pin	Function
1	Line
2	Neutral
⏚	Ground

Output Connector Screw Terminal Bus Bar M4 Screw	
Bar	Single Output
+	+V1
-	RTN

Signal Connector J4 JST PN S10B-PHDSS			
Pin	Single	Pin	Single
1	+Sense	7	+V Standby
2	-Sense	8	+V Standby
3	N/C	9	-V Standby
4	Inhibit LO	10	-V Standby
5	Inhibit HI		
6	P OK		

Notes:

1. All dimensions in inches (mm).
2. Tolerance .xx = 0.02 (0.50); .xxx = 0.01 (0.25)
3. J4 mates with JST housing pn PHDR-10VS and with JST SPHD-001T-P0.5 crimp terminals.

Thermal Considerations

In order to ensure safe operation of the PSU in the end-use equipment, the temperature of the components listed in the table below must not be exceeded. Temperature should be monitored using K type thermocouples placed on the hottest part of the component (out of direct air flow). See below for component locations.

Temperature Measurements (at Maximum Ambient)	
Component	**Max. Temperature °C**
T1 Coil	120°C
L3 Coil	120°C
Heatsink	110°C
C11	105°C
C47	105°C

Service Life

The estimated service life of the GCU500 is determined by the cooling arrangements and load conditions experienced in the end application. Due to the uncertain nature of the end application this estimated service life is based on the actual measured temperature of a key capacitor within the product when installed by the end application.

The graph below expresses the estimated lifetime of a given component temperature and assumes continuous operation at this temperature.

Estimated Service Life vs Component Temperature

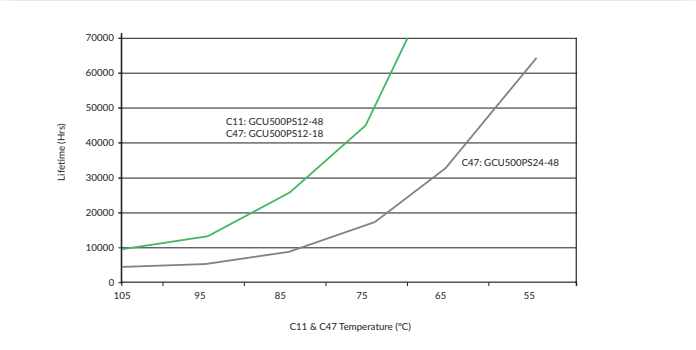

GCU500PS12-18

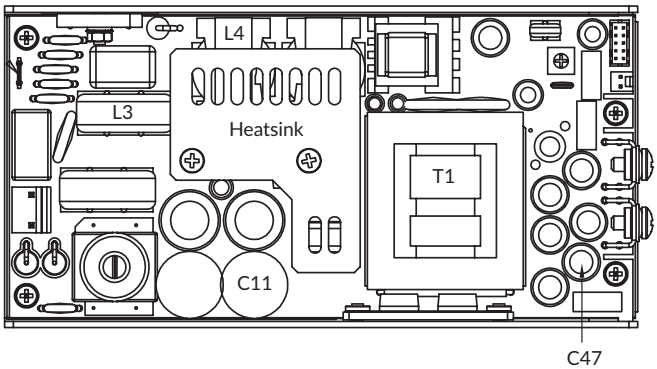
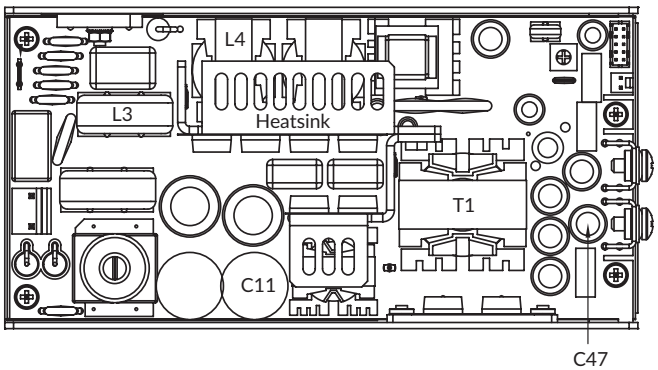
GCU500PS24-48