150/180/250/350 Watts

- Convection/Forced-cooled Ratings
- Universal 85 - 264 VAC Input
- IT & Medical Safety Approvals (Class I & II)
- < 0.5 W Standby Power (150 & 180 Models)
- -40° C to +70° C Operation
- Remote On/Off
- Class B Emissions
- 3 Year Warranty

80 PLUS SILVER

GREEN XP POWER

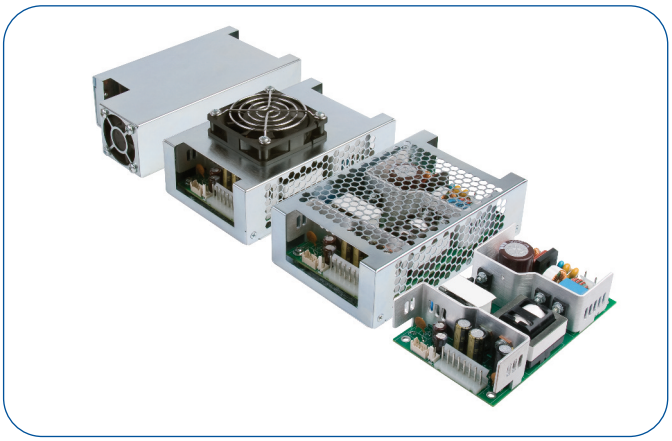

The GCS Series has been designed to minimise the no load power consumption and maximise efficiency in order to facilitate equipment design to the latest environmental legislation. Approved for Class I and Class II applications, this range of single output AC-DC power supplies are packaged in an industry standard 3.0" x 5.0" x 1.42" package and achieves EN55011/32 Level B emissions compliance whilst maintaining very low earth leakage currents, making them suitable for a wide range of 1U and other industrial, IT and medical applications.

Dimensions:

GCS150/GCS180/GCS250/GCS350:
5.00 x 3.00 x 1.42″ (127.0 x 76.2 x 36.3 mm)
(-C): 5.50 x 3.48 x 1.70″ (139.7 x 88.5 x 43.2 mm)
(-TF): 5.50 x 3.48 x 2.20″ (139.7 x 88.5 x 57.8 mm)
(-EF): 6.35 x 3.48 x 1.70″ (161.3 x 88.5 x 43.2 mm)
(350-EF): 6.00 x 3.50 x 1.75″ (152.4 x 88.9 x 44.4 mm)

The series has single output versions from 12 V to 56 VDC, dual-fusing for compliance with IEC60601-1 and feature minimal excess heat generation as efficiencies reach 94%. They will deliver up to 350 W of power over an operating range of -40 °C and up to +70 °C and are available with a number of cover options.

Models & Ratings

Output Voltage V1	Output Current V1		Output Voltage (Vfan) & Current	Max Output Power	Model Number [1,2,3,4,5]
	Convection-cooled[6,7]	Forced-cooled[8]			
12.0 VDC	9.2 A	12.5 A	12.0 VDC/0.6 A	157 W	GCS150PS12
15.0 VDC	7.3 A	10.0 A	12.0 VDC/0.6 A	157 W	GCS150PS15
24.0 VDC	4.6 A	6.3 A	12.0 VDC/0.6 A	157 W	GCS150PS24
28.0 VDC	3.9 A	5.4 A	12.0 VDC/0.6 A	157 W	GCS150PS28
48.0 VDC	2.3 A	3.2 A	12.0 VDC/0.6 A	157 W	GCS150PS48
12.0 VDC	12.5 A	15.0 A	12.0 VDC/0.6 A	187 W	GCS180PS12
15.0 VDC	10.0 A	12.0 A	12.0 VDC/0.6 A	187 W	GCS180PS15
24.0 VDC	6.3 A	7.5 A	12.0 VDC/0.6 A	187 W	GCS180PS24
28.0 VDC	5.4 A	6.4 A	12.0 VDC/0.6 A	187 W	GCS180PS28
48.0 VDC	3.1 A	3.7 A	12.0 VDC/0.6 A	187 W	GCS180PS48
12.0 VDC	15.0 A	18.8 A	12.0 VDC/0.6 A	232 W	GCS250PS12
15.0 VDC	12.0 A	15.0 A	12.0 VDC/0.6 A	232 W	GCS250PS15
24.0 VDC	7.5 A	10.4 A	12.0 VDC/0.6 A	257 W	GCS250PS24
28.0 VDC	6.4 A	8.9 A	12.0 VDC/0.6 A	257 W	GCS250PS28
48.0 VDC	3.7 A	5.2 A	12.0 VDC/0.6 A	257 W	GCS250PS48
56.0 VDC	3.2 A	4.5 A	12.0 VDC/0.6 A	257 W	GCS250PS56
12.0 VDC	16.7 A	29.2 A	12.0 VDC/0.6 A	350 W	GCS350PS12[9]
15.0 VDC	13.3 A	23.4 A	12.0 VDC/0.6 A	350 W	GCS350PS15[9]
24.0 VDC	8.3 A	14.6 A	12.0 VDC/0.6 A	350 W	GCS350PS24[10]
28.0 VDC	7.1 A	12.5 A	12.0 VDC/0.6 A	350 W	GCS350PS28[10]
48.0 VDC	4.2 A	7.3 A	12.0 VDC/0.6 A	350 W	GCS350PS48[10]
56.0 VDC	3.6 A	6.25 A	12.0 VDC/0.6 A	350 W	GCS350PS56[10]

Notes

1. *Add suffix -C for convection-cooled cover, e.g. GCS150PS12-C.*
2. *Cover kits available. Order part no.: GCS150/180 CVR KIT*
3. *Add suffix -EF for fan-cooled cover with end fan e.g. GCS150PS12-EF, add suffix -TF for fan-cooled cover with top fan, e.g. GCS150PS12-TF. Note: Vfan output no longer available.*
4. *Add suffix -R for remote on/off, e.g. GCS150PS12-R, GCS150PS12-RC with convection cover or GCS150PS12-REF/GCS150PS12-RTF with fan covers, (remote on/off is standard on GCS350 models).*
5. *GCS250PS12-C & GCS250PS15-C models derate 20% when convection cooled.*
6. *GCS350 convection rating quoted at 40 °C, others at 50 °C, see thermal derating curve.*
7. *GCS350-C models derate 15% when convection-cooled at 40 °C.*
8. *7 CFM required to meet stated current for GCS150/180/250 and 15 CFM for GCS350.*
9. *Add suffix '-J' for optional dual row molex connector. See GCS350 model mechanics for details.*
10. *Add suffix '-S' for optional screw terminals. See GCS350 mechanics for details.*

Input

Characteristic	Minimum	Typical	Maximum	Units	Notes & Conditions
Input Voltage - Operating	85	115/230	264	VAC	Derate output power <90 VAC. See fig 1.
Input Frequency	47	50/60	63	Hz	
Power Factor		>0.9			230 VAC, 100% load
Input Current - Full Load		1.5/0.7		A	GCS150: 115/230 VAC
		1.8/0.8			GCS180: 115/230 VAC
		2.2/1.1			GCS250 12-15 V models: 115/230 VAC
		2.4/1.2			GCS250 ≥24 V models: 115/230 VAC
		3.6/1.8			GCS350: 115/230 VAC
Inrush Current		80		A	230 VAC cold start 25 °C
No Load Input Power			0.5	W	All GCS150 & GCS180 (including -R Models)
		2.3			GCS150 & GCS180 -R Models with inhibit activated
		5			All GCS250 (including -R Models) 115V AC
		3			All GCS250 (including -R Models) 230V AC
		1			GCS250 -R Models with inhibit activated 115V AC
		3			GCS250 -R Models with inhibit activated 230V AC
		4			GCS350: 115/230 VAC
Earth Leakage Current		60/120	200	µA	GCS150: 115/230 VAC/50 Hz Typ., 264 VAC/60 Hz Max.
		95/185	250		GCS180: 115/230 VAC/50 Hz Typ., 264 VAC/60 Hz Max.
		95/185	250		GCS250: 115/230 VAC/50 Hz Typ., 264 VAC/60 Hz Max.
		95/185	250		GCS350: 115/230 VAC/50 Hz Typ., 264 VAC/60 Hz Max.
Input Protection	GCS150/180: F3.15 A/250 V internal fuse in both lines. GCS250/350: F5.0 A/250 V internal fuse in both lines.				

Input Voltage Derating Curve

Figure 1

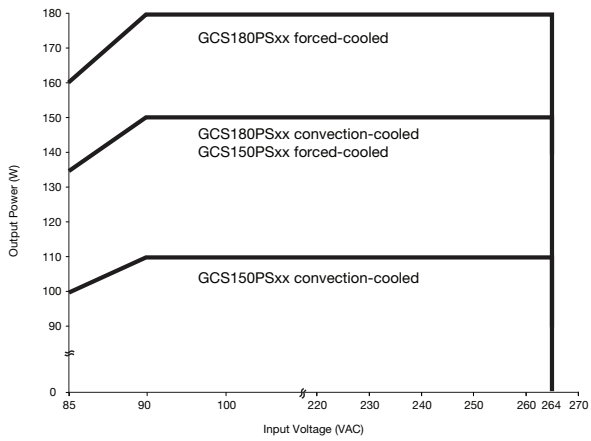

GCS150 & GCS180

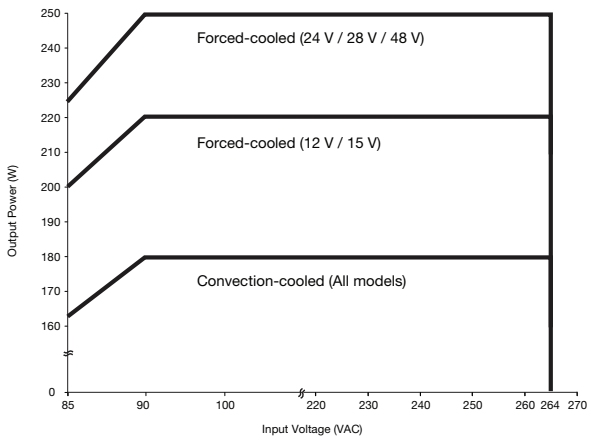

GCS250

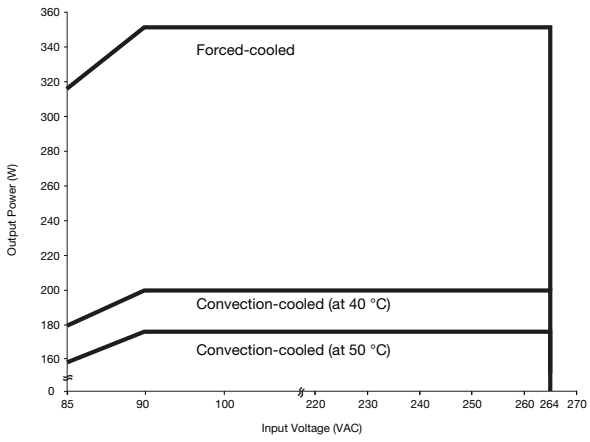

GCS350

Output

Characteristic	Minimum	Typical	Maximum	Units	Notes & Conditions
Output Voltage - V1	12		56	VDC	See Models and Ratings table
Initial Set Accuracy			±1 (V1) & ±5(Vfan)	%	50% load, 115/230 VAC
Output Voltage Adjustment -V1			±2	%	Via potentiometer. See mech. details, Vfan will track
Minimum Load	0			A	
Start Up Delay			2	s	115/230 VAC full load
Hold Up Time		20		ms	GCS150 Models
		16/18			GCS180 Models
		25			GCS250PS12 (225W)
		17			GCS250 Other Models (250W)
		17			GCS350
Drift			±0.2	%	After 20 min warm up
Line Regulation			±0.5	%	90-264 VAC
Load Regulation			±0.5 (V1), ±5(Vfan)	%	0-100% load
Transient Response - V1			4	%	Recovery within 1% in less than 500 µs for a 50-75% and 75-50% load step
Over/Undershoot - V1		0		%	
Ripple & Noise - V1			1	% pk-pk	20 MHz bandwidth, 12V Models 1.5% max
Overvoltage Protection - V1	110		140	%	Vnom DC. Output 1, recycle input to reset
Overload Protection - V1	110		150	% I nom	See fig. 2. Trip and Restart
Short Circuit Protection - V1					Continuous
Temperature Coefficient			0.05	%/°C	
Overtemperature Protection			110	°C	At measurement point. Present on GCS350 only. Measurement internally, auto resetting.

Output Overload Characteristic

Figure 2
GCS180PS12 example (other similar).

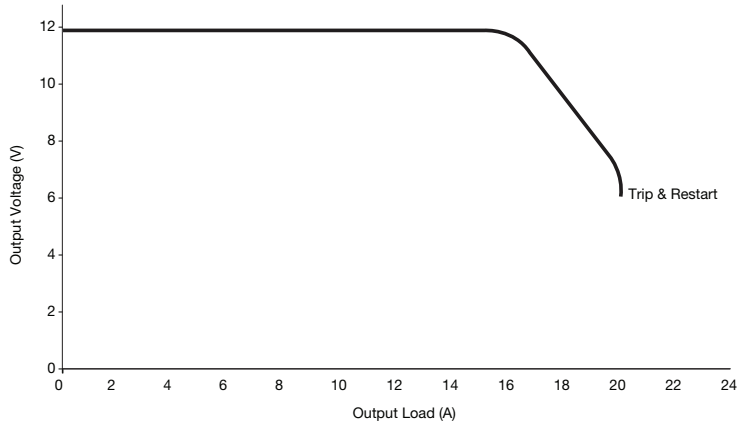

General

Characteristic	Minimum	Typical	Maximum	Units	Notes & Conditions
Efficiency		93		%	230 VAC Full load (see fig.3-5)
	80 Plus Silver				All models except 12 V models
	80 Plus Bronze				12 V models
Isolation: Input to Output	4000			VAC	
Input to Ground	1500			VAC	
Output to Ground	1500			VAC	
Switching Frequency	60		200	kHz	PFC Converter
	90		150		Main Converter
Power Density			7.4	W/in³	GCS150
			8.8		GCS180
			12.1		GCS250
			16.4		GCS350
Mean Time Between Failure		569		kHrs	MIL-HDBK-217F, Notice 2 +25 °C GB
Weight: Open Frame		0.65 (0.29)		lb (kg)	
End Fan Unit		1.30 (0.59)		lb (kg)	
Top Fan Unit		1.15 (0.52)		lb (kg)	
Covered Unit		1.05 (0.48)		lb (kg)	

Efficiency Vs Load

Figure 3
12 V Models

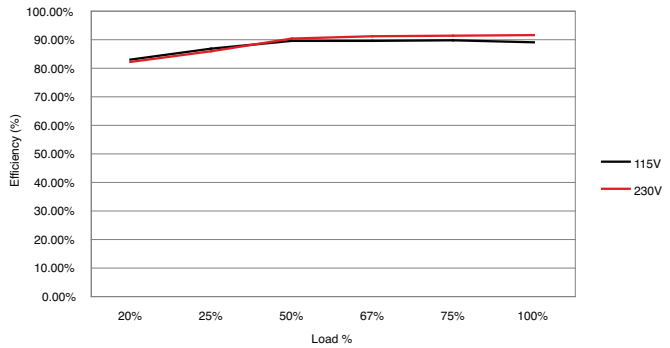

Figure 4
24 V Models

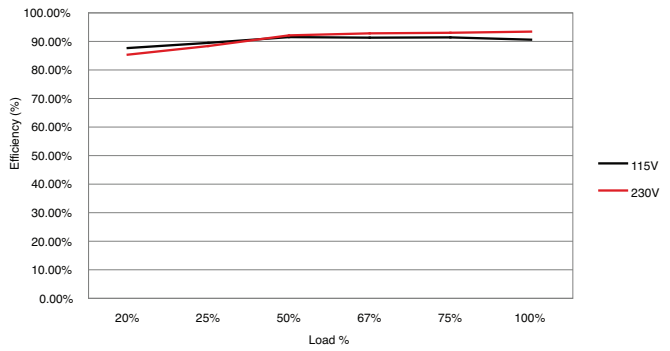

Figure 5
48 V Models

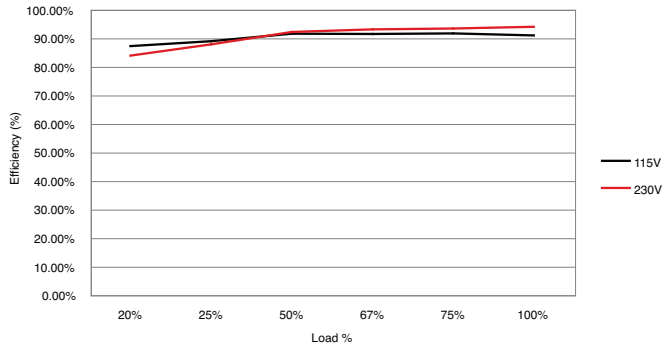

Signals & Controls

Characteristic		Notes & Conditions
Remote Sense		Compensates for 0.5 V total voltage drop
Remote On/Off (-R models) (Standard on GCS350 models)	Inhibit	The inhibit lo (pin 4), should be pulled below 0.4 V to switch V1 & Vfan off. Open circuit or >4 V to switch on (see fig. 6)
	Enable	With the inhibit lo (pin 4) pulled low as detailed above, connecting inhibit hi (pin 5) to inhibit lo (pin 4) will enable V1 & V fan output. (see fig. 7)

Remote On/Off (Inhibit)

Figure 6

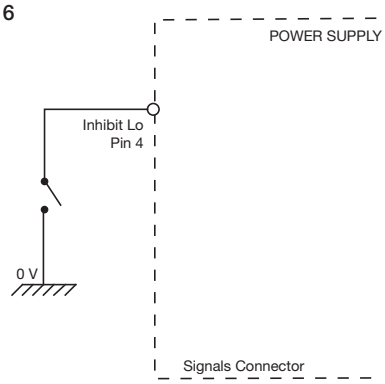

Remote On/Off (Enable)

Figure 7

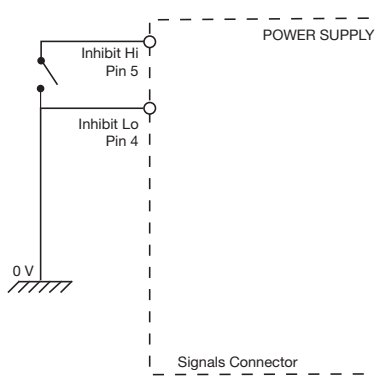

Environmental

Characteristic	Minimum	Typical	Maximum	Units	Notes & Conditions
Operating Temperature	-40		+70	°C	See derating curve, fig. 8
Storage Temperature	-40		+85	°C	
Cooling	7			CFM	Forced Cooled >110 W GCS150
					Forced Cooled >150 W GCS180
					Forced Cooled >180 W GCS250
	15				GCS350
Humidity	5		95	%RH	Non-condensing
Operating Altitude			5000	m	
Shock					±3 x 30g shocks in each plane, total 18 shocks. 30g = 11ms (+/-0.5msec), half sine. Conforms to EN60068-2-27 & EN60068-2-47
Vibration					Single axis 10 - 500 Hz at 2g sweep and endurance at resonance in all 3 planes. Conforms to EN60068-2-6

Thermal Derating Curve

Figure 8 - GCS150, 180, 250

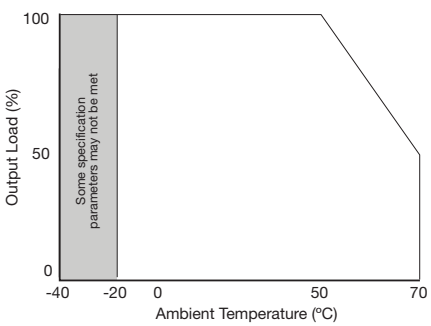

Figure 9 - GCS350 Convection cooled ratings

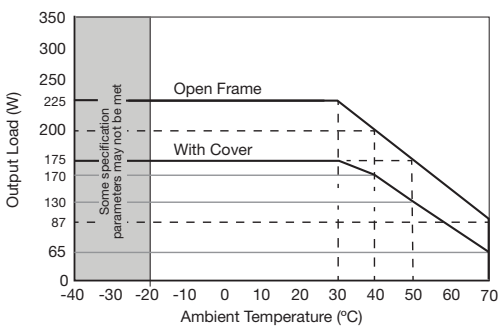

Figure 10 - GCS350 Forced cooled ratings

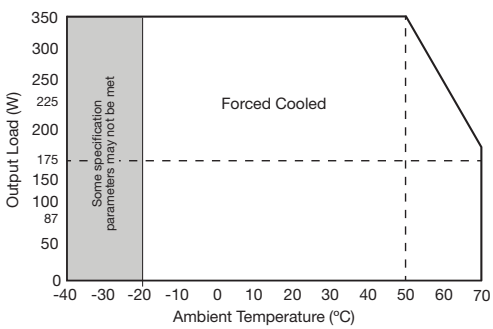

EMC: Emissions

Phenomenon	Standard	Test Level	Criteria	Notes & Conditions
Conducted	EN55011/32	Class B		
Radiated	EN55011/32	Class B		GCS150
		Class A		GCS180/GCS250/GCS350
		Class B		GCS180 & GCS250 with 3 turns of output cable through added ferrite core. (Manufacturer: Fair - Rite Products Corp, Part No: 2643800502)
Harmonic Fluctuations	EN61000-3-3			

EMC: Immunity

Phenomenon	Standard	Test Level	Criteria	Notes & Conditions
Low Voltage PSU EMC	EN61204-3	High severity level	as below	
Harmonic Current	EN61000-3-2	Class A		All models
		Class C		> 50 W GCS150
				> 50 W GCS180
				> 80 W GCS250
				>125 W GCS350
Radiated	EN61000-4-3	3	A	
EFT	EN61000-4-4	3	A	
Surges	EN61000-4-5	Installation class 3	A	
Conducted	EN61000-4-6	3	A	
Dips and Interruptions	EN55024 (100 VAC)	Dip >95% (0 VAC), 8.3ms	A	
		Dip 30% (70 VAC), 416ms	B	
		Dip >95% (0 VAC), 4160ms	B	
	EN55024 (240 VAC)	Dip >95% (0 VAC), 10.0ms	A	
		Dip 30% (168 VAC), 500ms	B	
		Dip >95% (0 VAC), 5000ms	B	
	EN60601-1-2 (100 VAC)	Dip >95% (0 VAC), 10.0ms	A	
		Dip 60% (40 VAC), 100ms	A	Derate Output Power to 85 W (GCS150)
				Derate Output Power to 90 W (GCS180)
				Derate Output Power to 120 W (GCS250)
				Derate Output Power to 150 W (GCS350)
		Dip 30% (70 VAC), 500ms	A	
		Dip >95% (0 VAC), 5000ms	B	
	EN60601-1-2 (240 VAC)	Dip >95% (0 VAC), 10.0ms	A	
		Dip 60% (96 VAC), 100ms		
		Dip 30% (168 VAC), 500ms	A	
		Dip >95% (0 VAC), 5000ms	B	

IEC60950-1:2005 Ed 2 / IEC62368-1:2014

UL 62368-1 & CAN/CSA C22.2 No. 62368-1-14,

Safety Approvals

Safety Agency	Safety Standard	Notes & Conditions
CB Report	~~IEC60950-1:2005 Ed 2~~	Information Technology
	IEC60601-1 Ed 3 Including Risk Management	Medical
UL	~~UL60950-1 (2007), CSA 22.2 No.60950-1-1:08~~	Information Technology
	ANSI/AAMI ES60601-1:2005 & CSA C22.2, No.60601-1:08	Medical
TUV	~~EN60950-1:2006~~	Information Technology
	EN60601-1/A12:2006	Medical
CE	LVD & RoHS	
Equipment Protection Class	Class I & Class II	See safety agency conditions of acceptibility for details

EN62368-1:2014/A11:2017

	Means of Protection	Ca
Primary to Secondary	2 x MOPP (Means of Patient Protection)	IEC60601-1 Ed 3
Primary to Earth	1 x MOPP (Means of Patient Protection)	
Secondary to Earth	1 x MOPP (Means of Patient Protection)	

Mechanical Details

GCS150

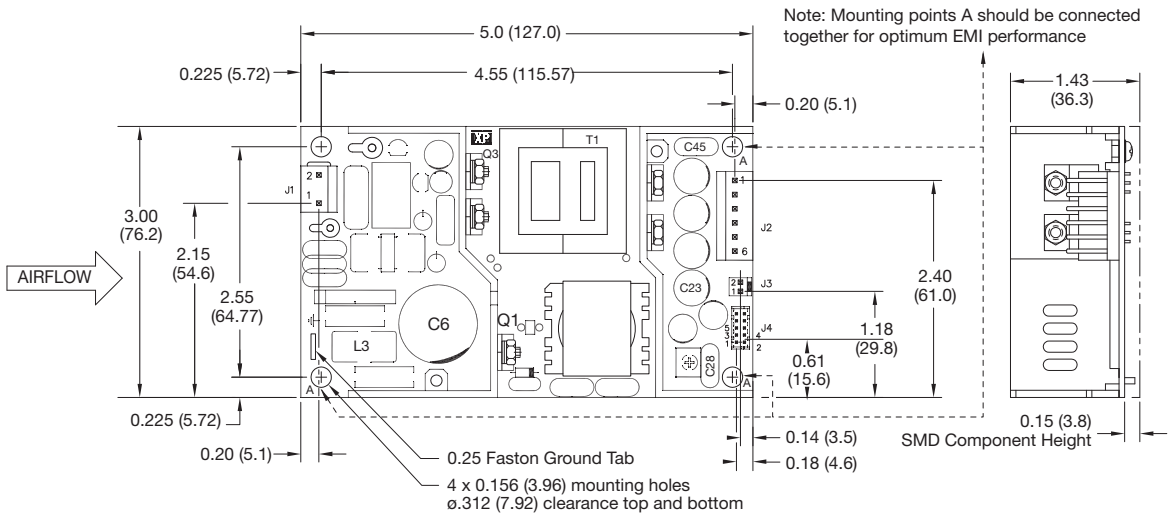

GCS180

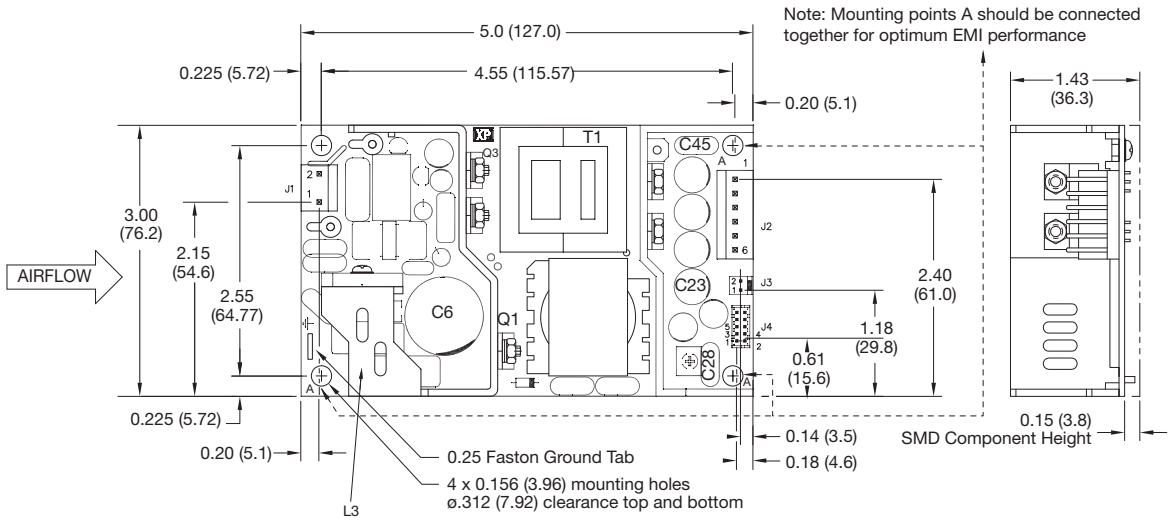

Input Connector J1 Molex pn. 09-65-2038	
Pin	Function
1	Line
2	Neutral

Output Connector J2 Molex pn. 09-65-2068	
Pin	Single Output
1	+V1
2	+V1
3	+V1
4	RTN
5	RTN
6	RTN

Fan Connector J3 Molex pn. 22-04-1021	
Pin	Function
1	Fan +(12 V)
2	Fan -

Signal Connector J4 JST PN B10B-PHDSS	
Pin	Single Output
1	+Sense
2	-Sense
3	XP Internal Use
4	Inhibit LO
5	Inhibit HI
6	N/C
7	N/C
8	N/C
9	N/C
10	N/C

Notes

1. All dimensions in inches (mm).
2. Tolerance .xx = ±0.02 (0.50); .xxx = ±0.01 (0.25)
3. Weight: 0.65 lbs (0.29 kg)
4. J1 mates with Molex Housing Pn. 09-50-1031. J2 mates with Molex Housing Pn. 09-50-1061 and both with Molex series 5194 crimp terminals. J4 mates with JST Housing Pn. PHDR-10VS and with JST SPHD-001T-P0.5 crimp terminals. J3 mates with Molex Housing Pn. 51191-0200 and with Molex series 50802 crimp terminals.

Mechanical Details

GCS250 12–15 V models

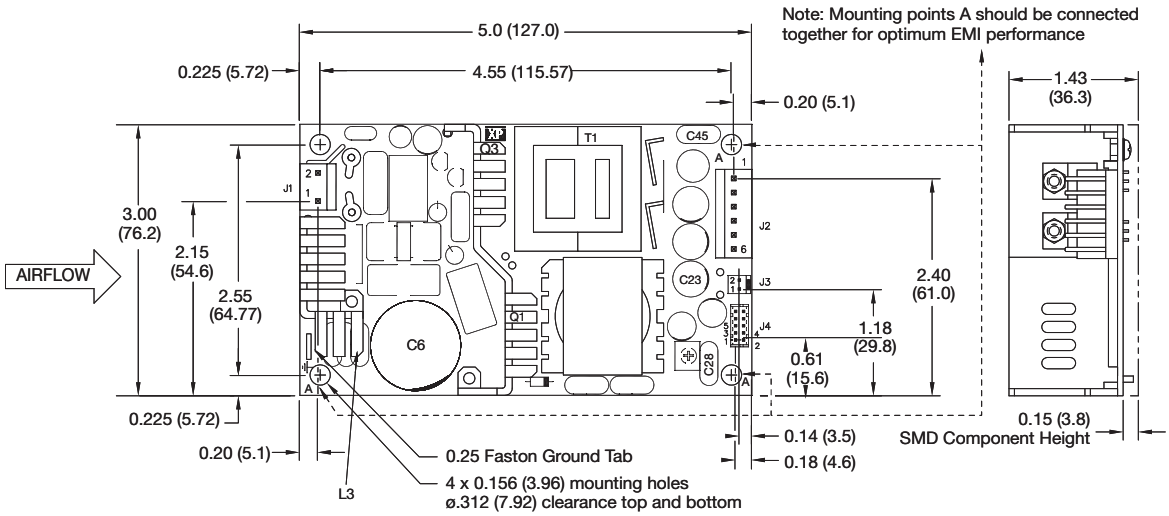

GCS250 Other models

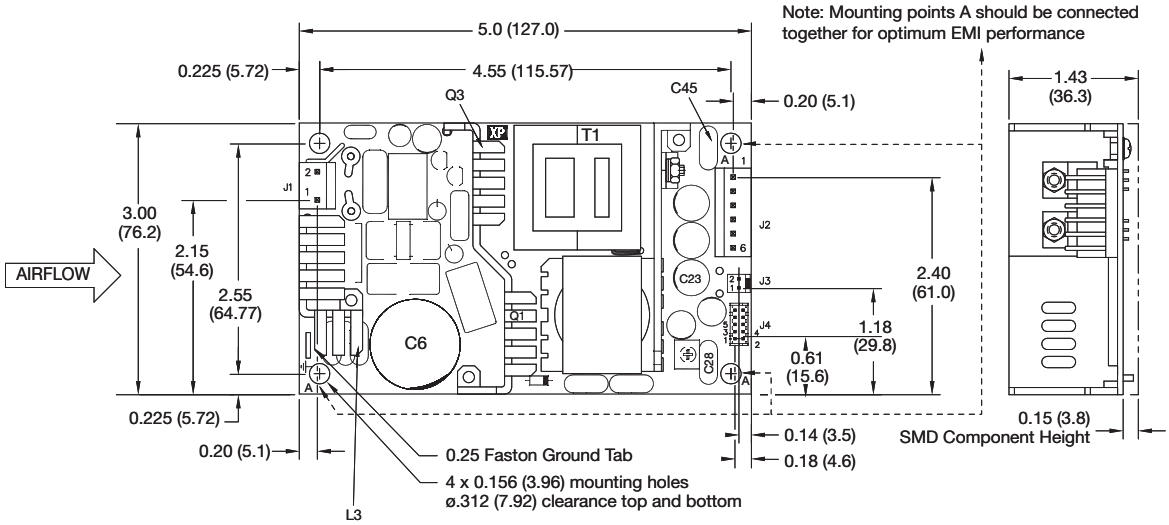

Input Connector J1 Molex pn. 09-65-2038	
Pin	Function
1	Line
2	Neutral

Output Connector J2 Molex pn. 09-65-2068	
Pin	Single Output
1	+V1
2	+V1
3	+V1
4	RTN
5	RTN
6	RTN

Fan Connector J3 Molex pn. 22-04-1021	
Pin	Function
1	Fan +(12 V)
2	Fan -

Signal Connector J4 JST PN B10B-PHDSS	
Pin	Single Output
1	+Sense
2	-Sense
3	XP Internal Use
4	Inhibit LO
5	Inhibit HI
6	N/C
7	N/C
8	N/C
9	N/C
10	N/C

Notes

1. All dimensions in inches (mm).
2. Tolerance .xx = ±0.02 (0.50); .xxx = ±0.01 (0.25)
3. Weight: 0.65 lbs (0.29 kg)
4. J1 mates with Molex Housing Pn. 09-50-1031. J2 mates with Molex Housing Pn. 09-50-1061 and both with Molex series 5194 crimp terminals. J4 mates with JST Housing Pn. PHDR-10VS and with JST SPHD-001T-P0.5 crimp terminals. J3 mates with Molex Housing Pn. 51191-0200 and with Molex series 50802 crimp terminals.

Mechanical Details

GCS350 model

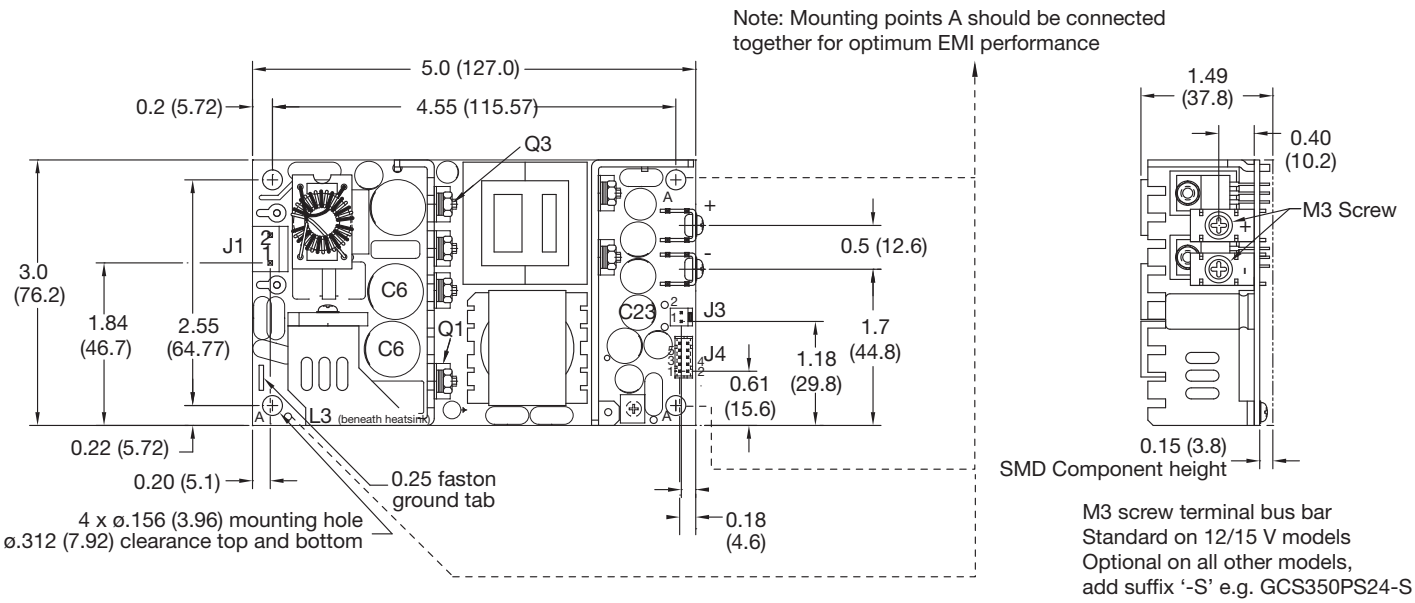

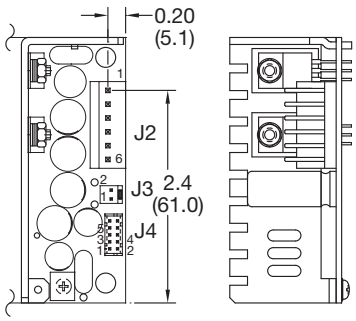

6 Position single row
Standard on 24/28/48/56 V models

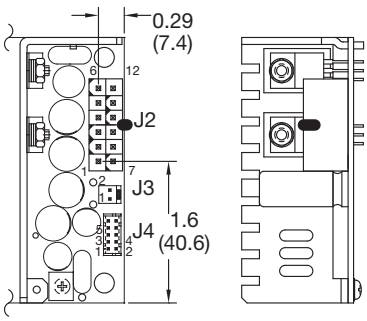

12 Position dual row
Optional on 12/15 V models, add suffix '-J' e.g. GCS350PS12-J

Input Connector J1 Molex pn. 09-65-2038	
Pin	Function
1	Line
2	Neutral

Output Connector 6 position J2 Molex pn. 09-65-2068	
Pin	Function
1	+V1
2	+V1
3	+V1
4	RTN
5	RTN
6	RTN

Output Connector 12 position J2 Molex pn. 39-28-8120	
Pin	Function
1-3	RTN
4-6	+V1
7-9	RTN
10-12	+V1

Fan Connector J3 Molex pn. 22-04-1021	
Pin	Function
1	Fan +(12 V)
2	Fan -

Signal Connector J4 JST PN B10B-PHDSS	
Pin	Function
1	+Sense
2	-Sense
3	XP Internal Use
4	Inhibit LO
5	Inhibit HI
6	N/C
7	N/C
8	N/C
9	N/C
10	N/C

Notes

1. All dimensions in inches (mm).
2. Tolerance .xx = ±0.02 (0.50); .xxx = ±0.01 (0.25)
3. Weight: 0.65 lbs (0.29 kg)
4. J1 mates with Molex Housing Pn. 09-50-1031. 6 position single row J2 mates with Molex Housing Pn. 09-50-1061 and both with Molex series 5194 crimp terminals. 12 position dual row J2 mates with Molex Housing Pn. 39-01-2125 and with Molex series 5556 crimp terminals. J3 mates with Molex Housing Pn. 51191-0200 and with Molex series 50802 crimp terminals. J4 mates with JST Housing Pn. PHDR-10VS and with JST SPHD-001T-P0.5 crimp terminals.

Mechanical Details

Covered (–C)

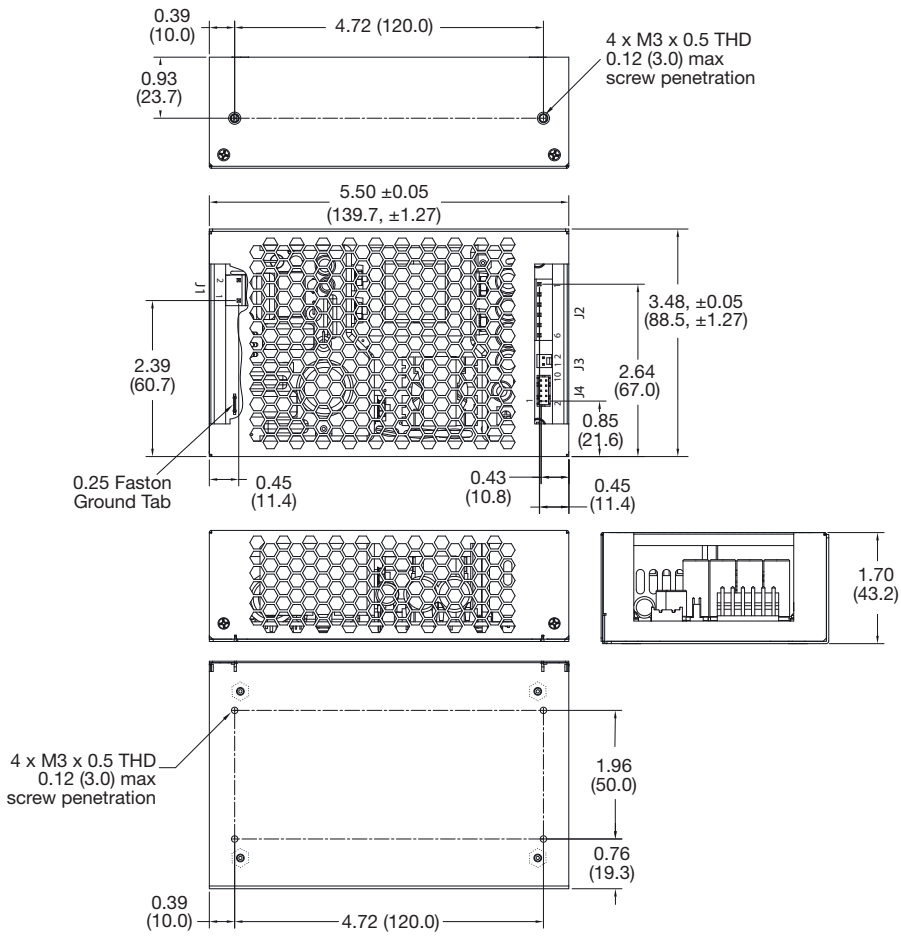

Input Connector J1 Molex pn. 09-65-2038	
Pin	Function
1	Line
2	Neutral

Output Connector J2 Molex pn. 09-65-2068	
Pin	Single Output
1	+V1
2	+V1
3	+V1
4	RTN
5	RTN
6	RTN

Fan Connector J3 Molex pn. 22-04-1021	
Pin	Function
1	Fan +(12 V)
2	Fan -

Signal Connector J4 JST PN B10B-PHDSS	
Pin	Single Output
1	+Sense
2	-Sense
3	XP Internal Use
4	Inhibit LO
5	Inhibit HI
6	N/C
7	N/C
8	N/C
9	N/C
10	N/C

Notes

1. All dimensions in inches (mm).
2. Tolerance .xx = ±0.02 (0.50); .xxx = ±0.01 (0.25)
3. J1 mates with Molex Housing Pn. 09-50-1031. J2 mates with Molex Housing Pn. 09-50-1061 and both with Molex series 5194 crimp terminals. J4 mates with JST Housing Pn. PHDR-10VS and with JST SPHD-001T-P0.5 crimp terminals. J3 mates with Molex Housing Pn. 51191-0200 and with Molex series 50802 crimp terminals.
4. In class II installations the cover is floating and provides 1 x MOPP (2 x MOOP).
5. Weight: 1.05 lbs (0.48 kg)

Mechanical Details

Top Fan (–TF)

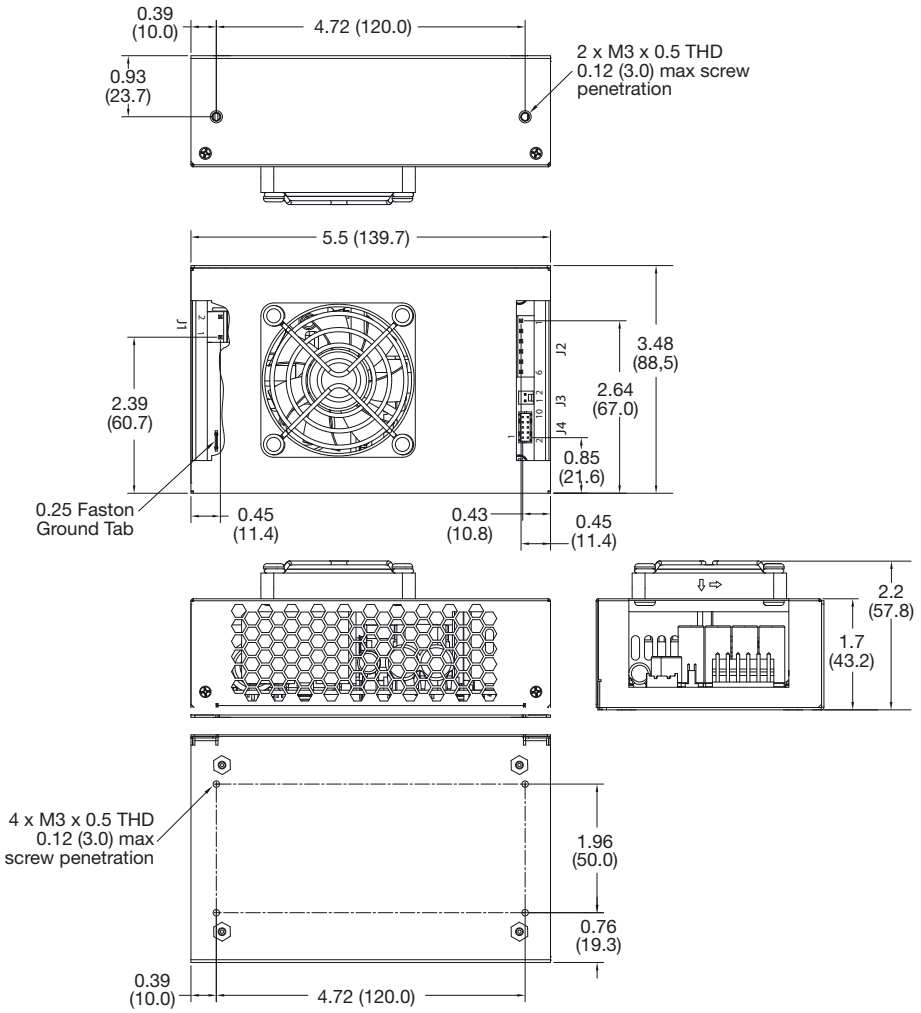

Input Connector J1 Molex pn. 09-65-2038	
Pin	Function
1	Line
2	Neutral

Output Connector J2 Molex pn. 09-65-2068	
Pin	Single Output
1	+V1
2	+V1
3	+V1
4	RTN
5	RTN
6	RTN

Fan Connector J3 Molex pn. 22-04-1021	
Pin	Function
1	Fan +(12 V)
2	Fan -

Signal Connector J4 JST PN B10B-PHDSS	
Pin	Single Output
1	+Sense
2	-Sense
3	XP Internal Use
4	Inhibit LO
5	Inhibit HI
6	N/C
7	N/C
8	N/C
9	N/C
10	N/C

Notes

1. All dimensions in inches (mm).
2. Tolerance .xx = ±0.02 (0.50); .xxx = ±0.01 (0.25)
3. J1 mates with Molex Housing Pn. 09-50-1031. J2 mates with Molex Housing Pn. 09-50-1061 and both with Molex series 5194 crimp terminals. J4 mates with JST Housing Pn. PHDR-10VS and with JST SPHD-001T-P0.5 crimp terminals. J3 mates with Molex Housing Pn. 51191-0200 and with Molex series 50802 crimp terminals.
4. In class II installations the cover is floating and provides 1 x MOPP (2 x MOOP).
5. Weight: 1.15 lbs (0.52 kg)

Mechanical Details

End Fan (–EF) GCS150/180/250

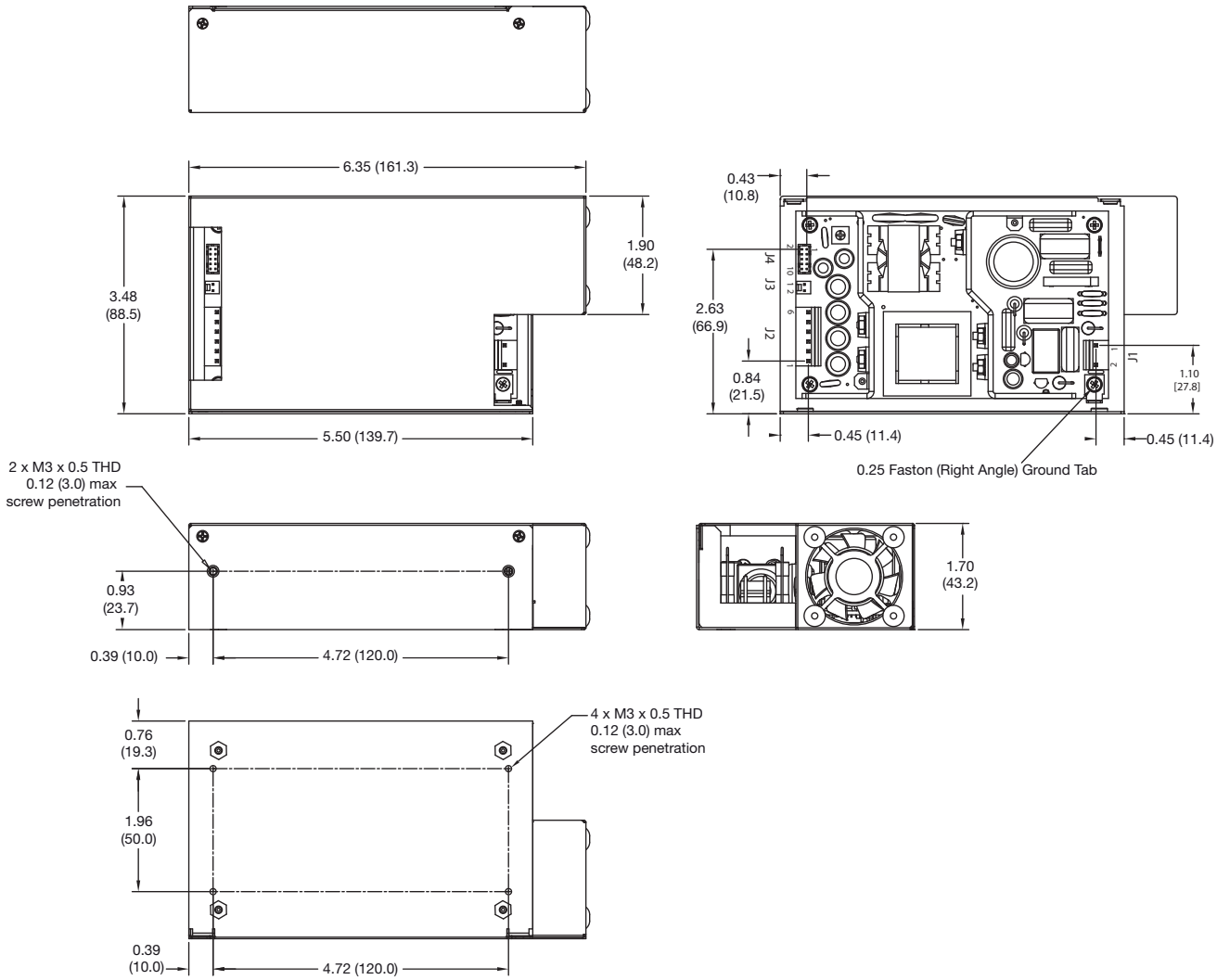

Input Connector J1 Molex pn. 09-65-2038	
Pin	Function
1	Line
2	Neutral

Output Connector J2 Molex pn. 09-65-2068	
Pin	Single Output
1	+V1
2	+V1
3	+V1
4	RTN
5	RTN
6	RTN

Fan Connector J3 Molex pn. 22-04-1021	
Pin	Function
1	Fan +(12 V)
2	Fan -

Signal Connector J4 JST PN B10B-PHDSS	
Pin	Single Output
1	+Sense
2	-Sense
3	XP Internal Use
4	Inhibit LO
5	Inhibit HI
6	N/C
7	N/C
8	N/C
9	N/C
10	N/C

Notes

1. All dimensions in inches (mm).
2. Tolerance .xx = ±0.02 (0.50); .xxx = ±0.01 (0.25)
3. J1 mates with Molex Housing Pn. 09-50-1031. J2 mates with Molex Housing Pn. 09-50-1061 and both with Molex series 5194 crimp terminals. J4 mates with JST Housing Pn. PHDR-10VS and with JST SPHD-001T-P0.5 crimp terminals. J3 mates with Molex Housing Pn. 51191-0200 and with Molex series 50802 crimp terminals.
4. In class II installations the cover is floating and provides 1 x MOPP (2 x MOOP).
5. Weight: 1.30 lbs (0.59 kg)

Mechanical Details

End Fan (–EF) GCS350

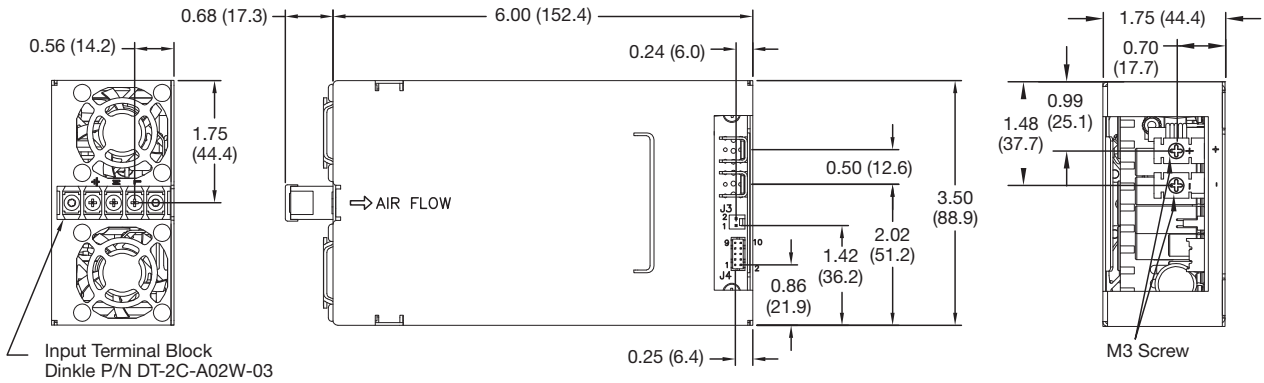

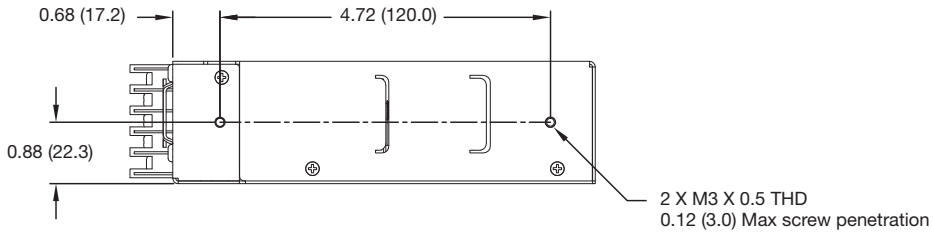

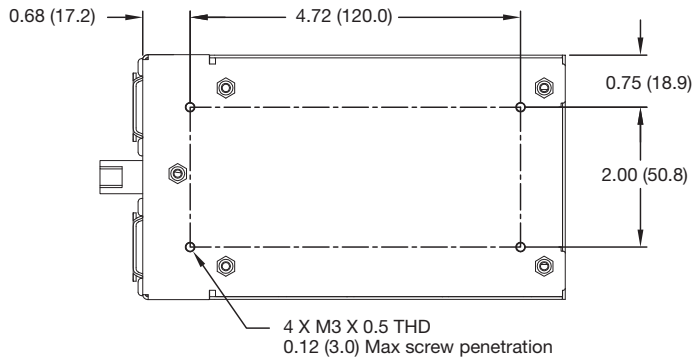

Input Connector J1 Dinkle PN DJ-26-AD2W-03	
Pin	Function
1	Line
2	Neutral
3	

Output Connector 6 position J2 Molex pn. 09-65-2068	
Pin	Function
1	+V1
2	+V1
3	+V1
4	RTN
5	RTN
6	RTN

Output Connector 12 position J2 Molex pn. 39-28-8120	
Pin	Function
1-3	RTN
4-6	+V1
7-9	RTN
10-12	+V1

Fan Connector J3 Molex pn. 22-04-1021	
Pin	Function
1	Fan +(12 V)
2	Fan -

Signal Connector J4 JST PN B10B-PHDSS	
Pin	Function
1	+Sense
2	-Sense
3	XP Internal Use
4	Inhibit LO
5	Inhibit HI
6	N/C
7	N/C
8	N/C
9	N/C
10	N/C

Notes

1. All dimensions in inches (mm).
2. Tolerance .xx = ±0.02 (0.50); .xxx = ±0.01 (0.25)
3. Weight: 0.65 lbs (0.29 kg)
4. 6 position single row J2 mates with Molex Housing Pn. 09-50-1061 and both with Molex series 5194 crimp terminals. 12 position dual row J2 mates with Molex Housing Pn. 39-01-2125 and with Molex series 5556 crimp terminals. J3 mates with Molex Housing Pn. 51191-0200 and with Molex series 50802 crimp terminals. J4 mates with JST Housing Pn. PHDR-10VS and with JST SPHD-001T-P0.5 crimp terminals.

Thermal Considerations

In order to ensure safe operation of the PSU in the end-use equipment, the temperature of the components listed in the table below must not be exceeded. Temperature should be monitored using K type thermocouples placed on the hottest part of the component (out of direct air flow). See Mechanical Details for component locations.

Temperature Measurements	
Component	Max Temperature °C
T1 Coil	120 °C
L3 Coil	120 °C
Q1 Body	120 °C
Q3 Body	120 °C
C6	105 °C
C23	105 °C

Service Life

The estimated service life of the GCS Series is determined by the cooling arrangements and load conditions experienced in the end application. Due to the uncertain nature of the end application this estimated service life is based on the actual measured temperature of a key capacitors with in the product when installed by the end application. The worst case of the two figures should be taken as the indicative service life in 24/7 operation.

The graph below expresses the estimated lifetime of a given component temperature and assumes continuous operation at this temperature.

Estimated Service Life vs Component Temperature

GCS150/180

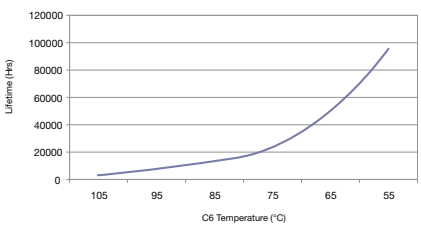

GCS250

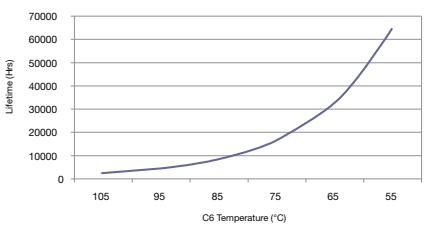

GCS350

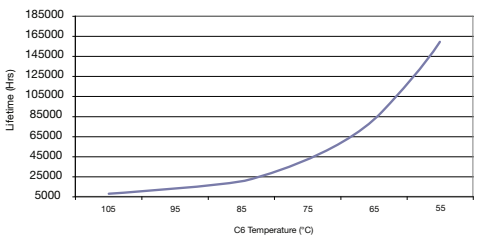

GCS150/180

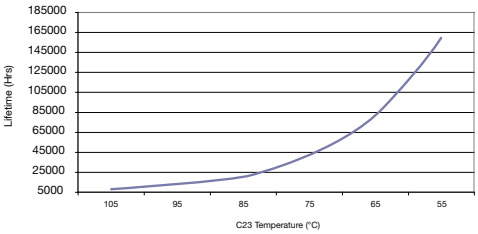

GCS250

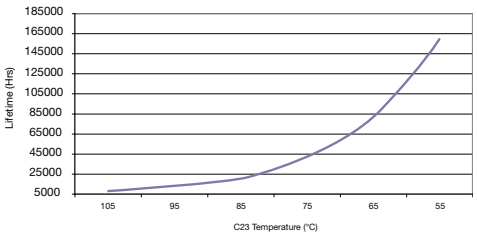
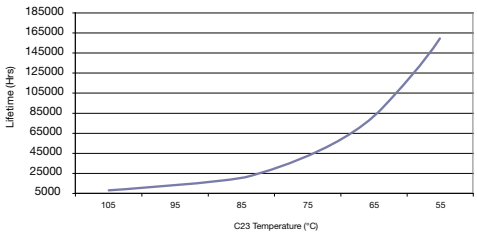
GCS350