schaffner MORE POWER TO YOU is now part of TE connectivity

Versatile Medical Class II EMC/RFI Filter

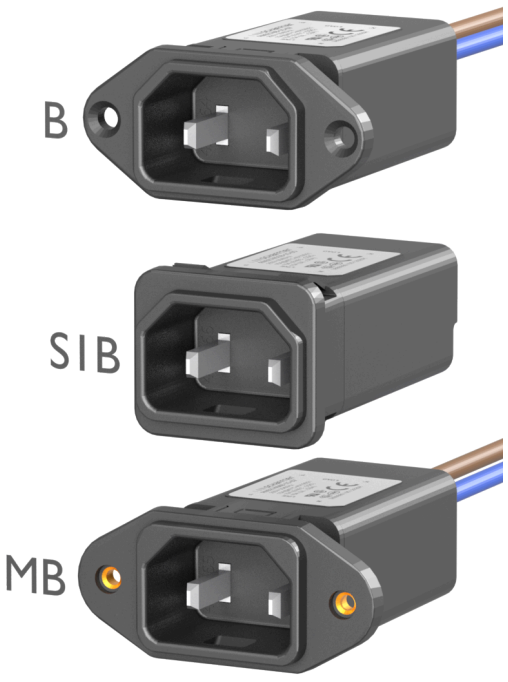

- Medical filter suitable for compliance with Protection Class II (ME) according IEC 60601-1
- Fulfills the requirement for two MOPP (means of patient protection), compliant with IEC/EN 60601-1
- No leakage current to earth
- Rated currents up to 15 A
- Excellent performance/size ratio
- Front mount, rear mount and snap-in versions (B, MB and S1B type)
- Plastic enclosure for higher dielectric strength insulation
- Fast-on terminals or wire leads
- V-lock compatible

Performance indicators

Attenuation performance

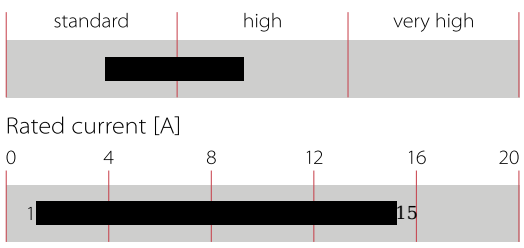

Approvals & Compliances

The FN9274 IEC inlet filter is suitable for compliance with Class II ME equipment. It incorporates an EMC filter into a C18 IEC inlet that offers excellent filter attenuation in a compact housing.

The filter is available with two connection variants on the load side. The cable version is touch-safe by default. The pins of the fast-on-version are recessed in the plastic housing. In combination with insulated crimp connectors Class II compliance can be achieved for Fast-on version.

The requirements for Two MOPP in IEC 60601-1:2005 + A1 regarding Leakage Currents, Insulation and Air Clearance and Creepage Distances and Ball Pressure test are fulfilled.

Features and Benefits

- Suitable for class II Medical Equipment (ME)
- Fulfills the requirements for Two MOPP in IEC 60601-1 - Medical electrical equipment
- Fulfills the requirements in IEC/EN 62368-1 - Audio/video, information and communication technology equipment
- Fulfills the requirements in IEC/EN 60950-1 - Information technology equipment
- Fulfills the requirements in IEC/EN 60335-1 - Household and similar electrical appliances
- Fulfills the requirements for Reinforced Insulation in IEC 61010-1 - Safety requirements
- All versions certified according UL/IEC 60939-3, C22.2 No. 8. CQC/CCC GB/T15287 and GB/T15288

Typical Applications

- General medical devices (MDD)
- In-vitro diagnostic medical devices (IVDD)
- Test and measurement equipment
- Portable electrical and electronic equipment
- Single-phase power supplies, switch-mode power supplies (SMPS)
- Audio / video / communication equipment (IEC/ UL 62368-1)

Technical Specifications

Maximum continuous operating voltage	250 VAC, 50/60 Hz
Nominal operating voltage	230 VAC
Rated currents	1 to 15 A @ 40°C
Operating frequency	DC to 400 Hz
High potential test voltage	P –> N 760 VAC for 2 s P/N –> Ext. insulation 4 kVAC for 60 s acc. IEC 60601-1
Overvoltage category	II acc. IEC 60664-1
Pollution degree	2 acc. IEC 60664-1
Surge pulse protection (Z type)	Helps compliance to IEC61000-4-5 (Differential Mode only)
Temperature range (operation and storage)	-40°C to +100°C (40/100/21)
Protection category	IP 40 according to IEC 60529 (front side, with inserted plug)
Flammability corresponding to	Laces for -07 version: UL 94 VW-1 Plastic Material: UL 94 V-0 Laces for -07 version: UL 94 VW-1
Vibration and shock	3M4 acc. IEC 60721-3-3
Design corresponding to	up to 15A: UL 60939-3, CSA Std C22.1 No. 8-13 up to 10A: IEC/EN 60939-3, GB/T15287, GB/T15288
MTBF (Mil-HB-217F)	>1,000,000 h @ 40°C/230 V

Typical electrical schematic

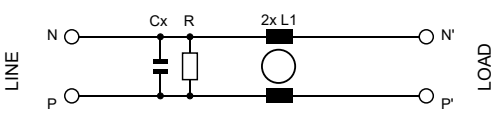

Filter Selection Table - Classic

Filter	Buy	Rated current @ 40°C [A]	Leakage current [mA]	Inductance L1 [mH]	Capacitance Cx [µF]	Resistor R [MΩ]	Input connections	Output connections	Output connections *	Weight [g]
FN9274XXB-1-ZZ		1	0.0	41.1	0.22	1	C18	-05	-07	<40
FN9274XXB-2-ZZ		2	0.0	20.1	0.22	1	C18	-05	-07	<40
FN9274XXB-4-ZZ		4	0.0	7.2	0.22	1	C18	-05	-07	<40
FN9274XXB-6-ZZ		6	0.0	3.2	0.22	1	C18	-05	-07	<40
FN9274XXB-10-ZZ		10	0.0	1.3	0.22	1	C18	-05	-07	<40
FN9274XXB-15-ZZ		15	0.0	0.4	0.22	1	C18	-05	-07	<40

Test conditions: Temperature: 25°C±2°C; measuring frequency for inductance: 1 kHz, 50 mV
Tolerances: Inductance: +50%, -30%; capacitance: ±20%; resistance: ±10%. For mechanical tolerances, please refer to the mechanical data section
* Standard length is 160 mm

Product selector

FN 9274 xx B -yy-zz

- -yy: 05: Fast-on 6.3 x 0.8 mm; 07: Wire leads
- -zz: 1 to 15: Rated current
- B: Standard Version for Medical Applications
- xx: Blank: Standard housing with mounting flanges (front mount); M: Standard housing with mounting flanges (rear mount); S1: Snap-in version, snapper on vertical side

For example FN9274MB-15-05:
- FN9274 IEC inlet with
- rear mount flanges (M),
- 15A rated current (15) and
- fast-on terminals (05).

Design-in recommendation:
- EMC and functional test with FN9274B-XX-05 (safety stock all currents - front mount, fast-on types)
- Mechanical integration with FN9274XXB-15-ZZ (safety stock for all variants - 15A-types)

Typical Filter Attenuation

Per CISPR 17 / symmetrical 50 Ω/50 Ω - Differential Mode (DM) / asymmetrical 50 Ω/50 Ω - Common Mode (CM)

1 A

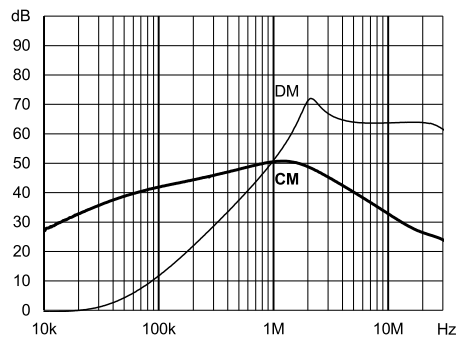

2 A

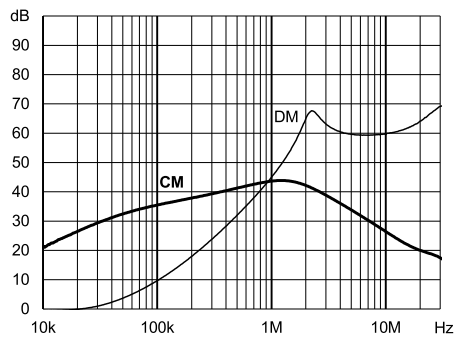

4 A

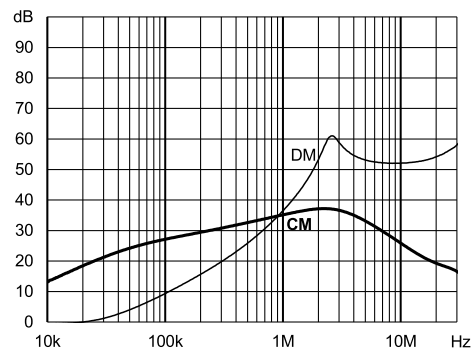

6 A

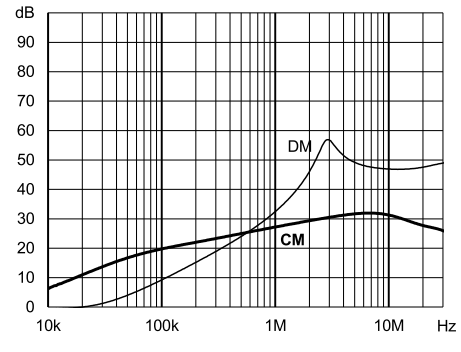

10 A

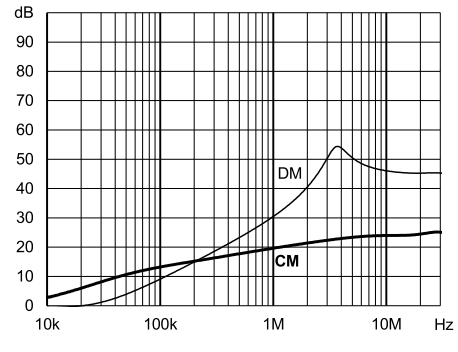

15 A

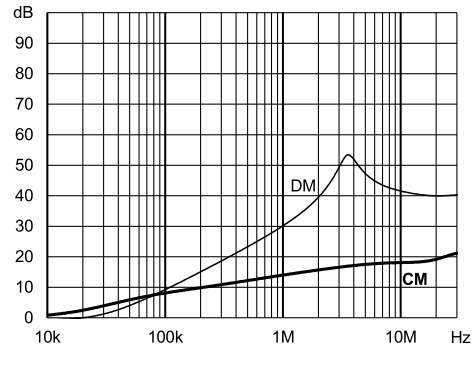

Mechanical Data - Front Mount

FN9274B-XX-05

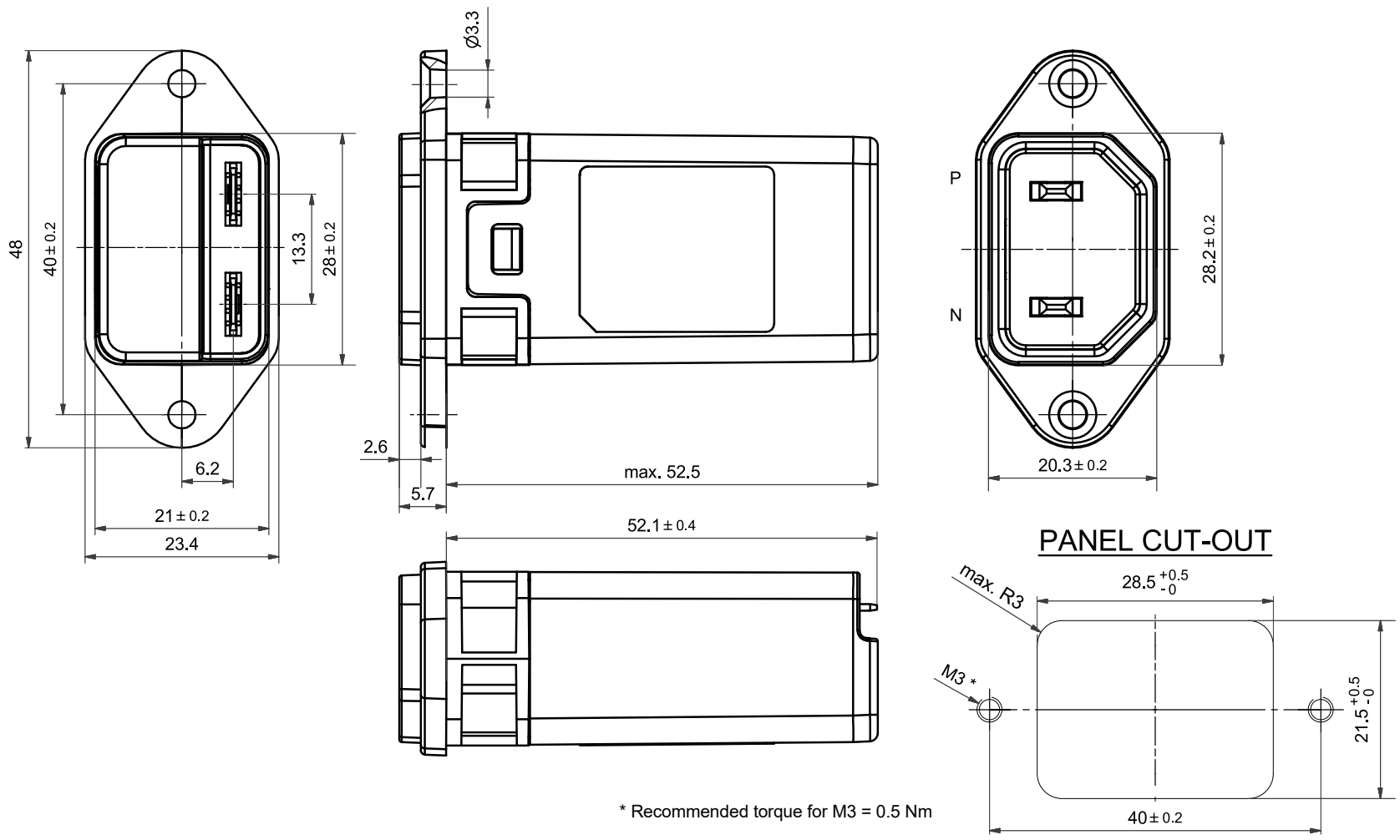

FN9274B-XX-07

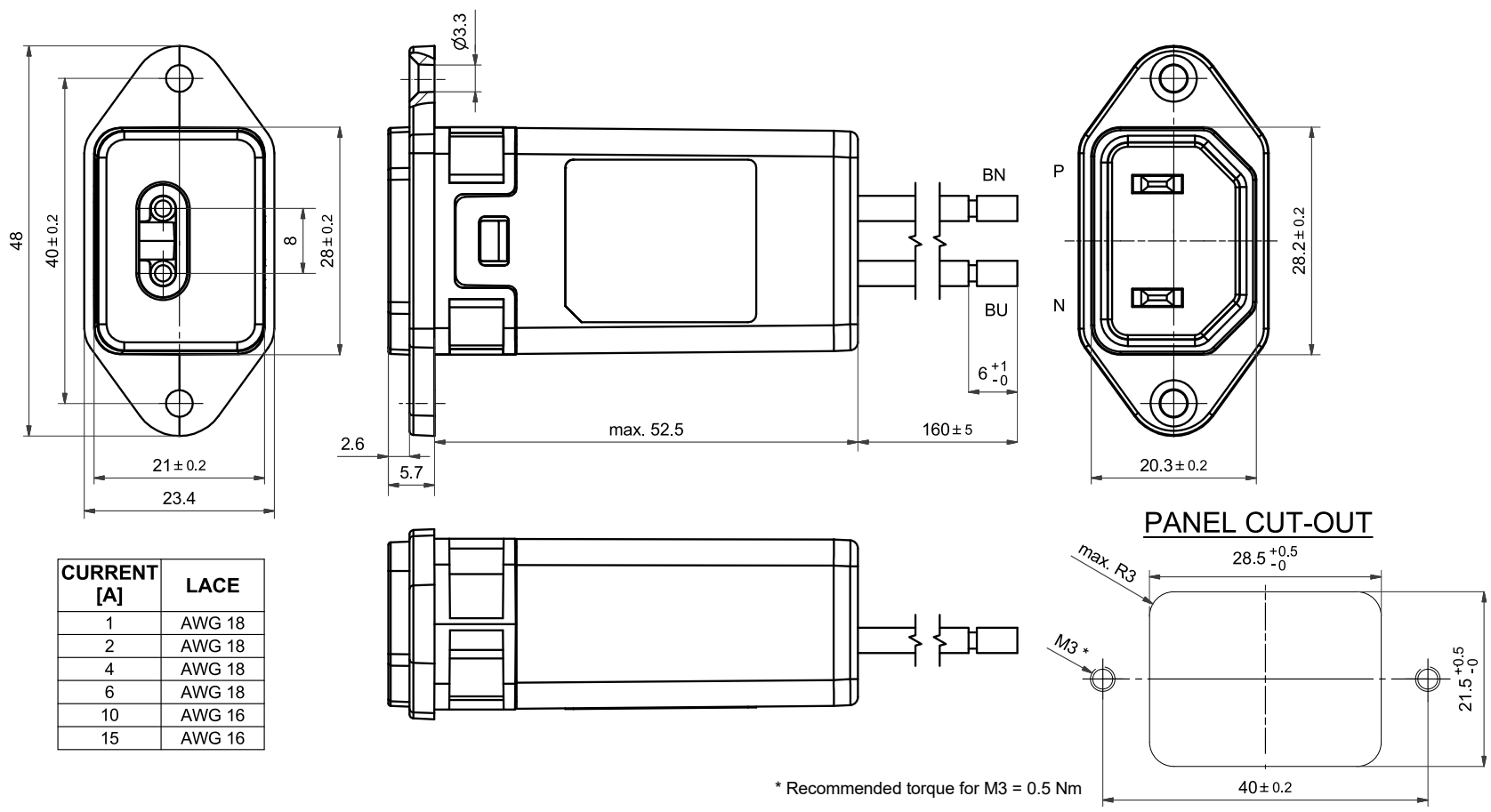

CURRENT [A]	LACE
1	AWG 18
2	AWG 18
4	AWG 18
6	AWG 18
10	AWG 16
15	AWG 16

For dimensions [mm] without tolerances: ISO 2768-m / EN22768-m applies

Mechanical Data - Rear Mount

FN9274MB-XX-05

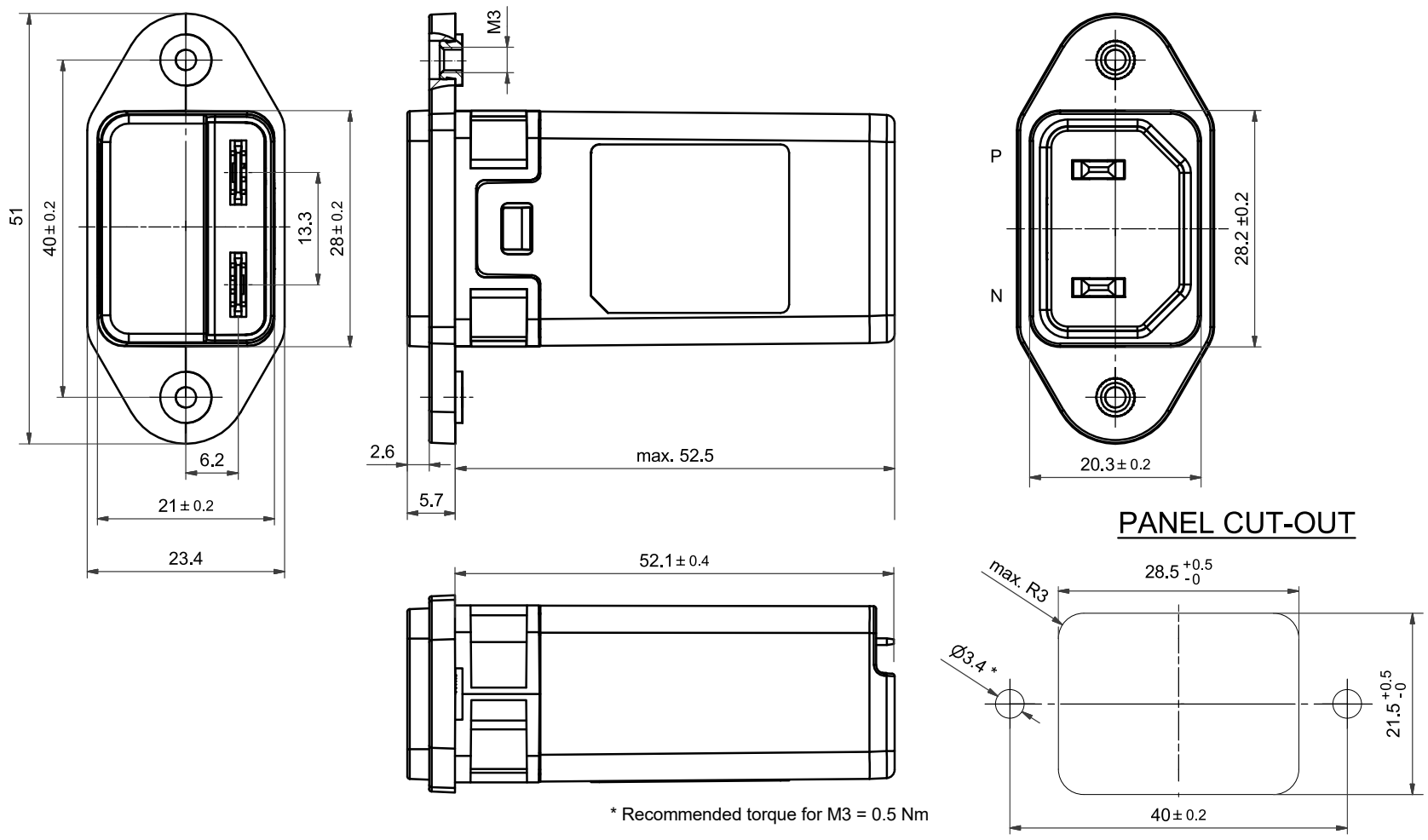

FN9274MB-XX-07

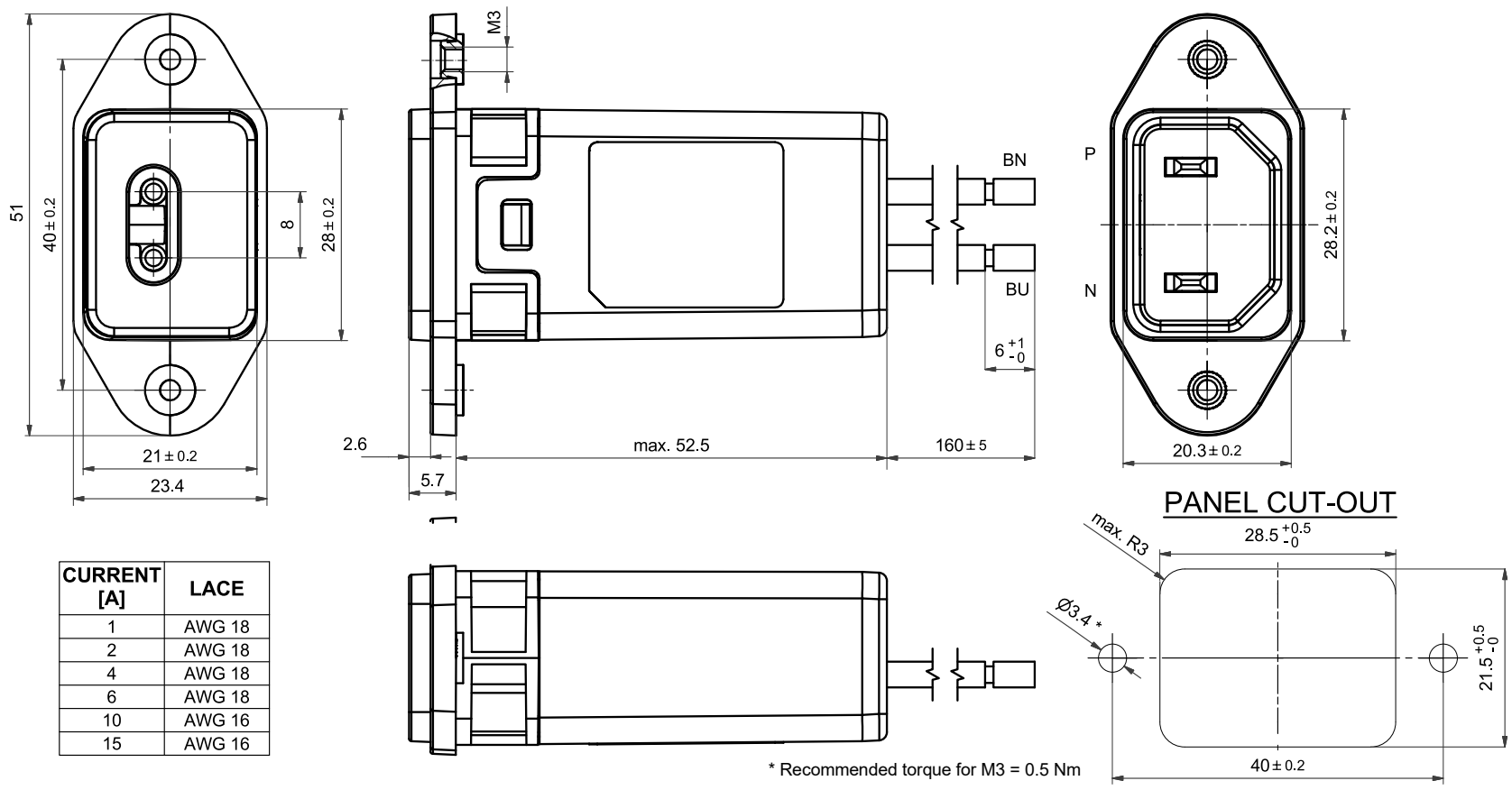

CURRENT [A]	LACE
1	AWG 18
2	AWG 18
4	AWG 18
6	AWG 18
10	AWG 16
15	AWG 16

For dimensions [mm] without tolerances: ISO 2768-m / EN22768-m applies

Mechanical Data - Snap-in

FN9274S1B-XX-05

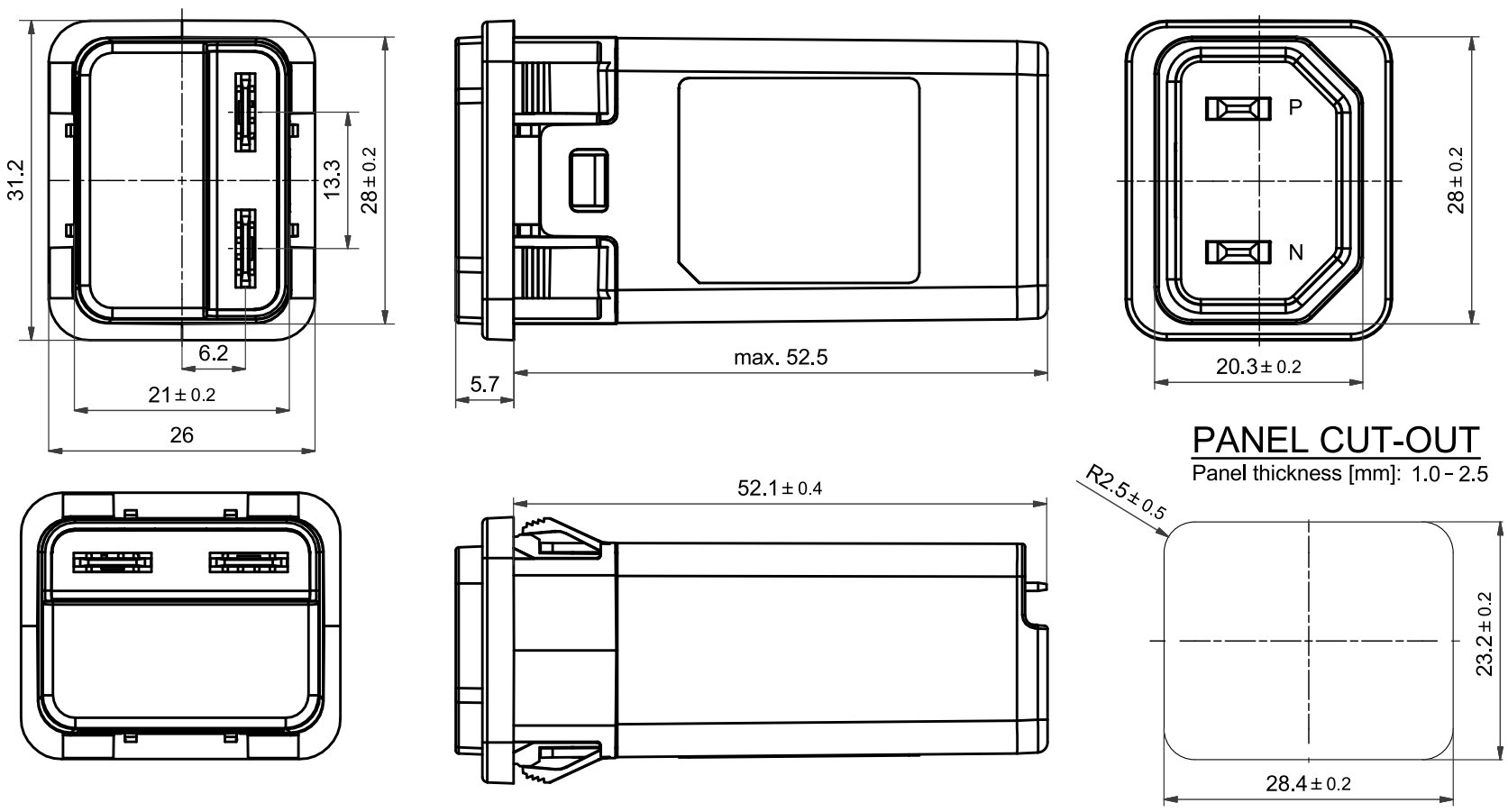

FN9274S1B-XX-07

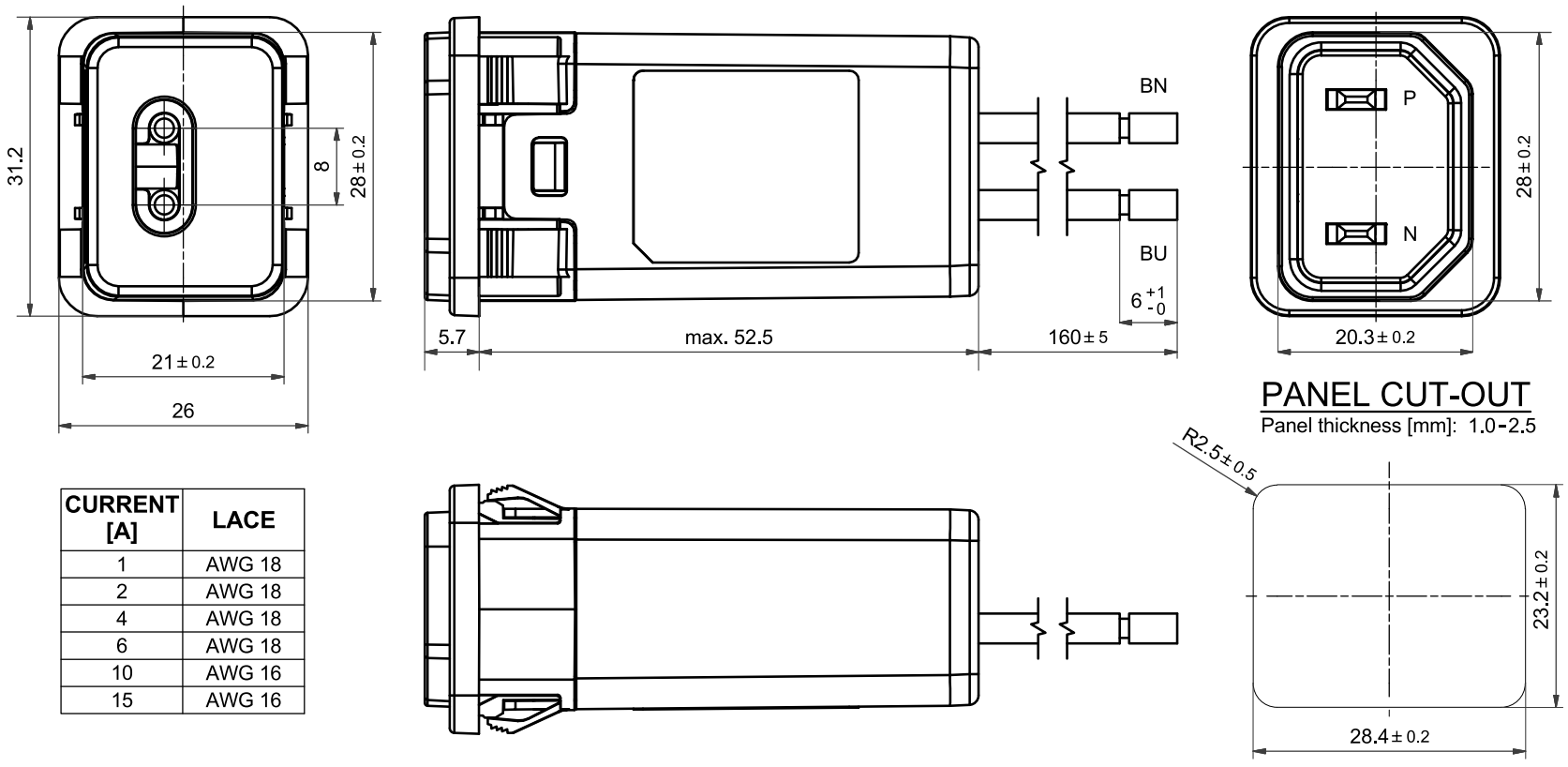

CURRENT [A]	LACE
1	AWG 18
2	AWG 18
4	AWG 18
6	AWG 18
10	AWG 16
15	AWG 16

For dimensions [mm] without tolerances: ISO 2768-m / EN22768-m applies

We are here to help

Read more insights from TE's experts:

Schaffner is now part of TE Connectivity

Learn more about Corcom products

Connect With Us

We make it easier to connect with our experts and are ready to provide the support you need.
Visit **te.com/support** to chat with a Product Information Specialist.

Contact a TE expert today

te.com

©2025 TE Connectivity plc. All Rights Reserved.

TE Connectivity, TE, TE connectivity (logo), and EVERY CONNECTION COUNTS, ECOsine, Schaffner are trademarks owned or licensed by TE Connectivity plc. family of companies. All other logos, products and/or company names referred to herein might be trademarks of their respective owners.

While TE has made every reasonable effort to ensure the accuracy of the information in this document, TE does not guarantee that it is error-free, nor does TE make any other representation, warranty or guarantee that the information is accurate, correct, reliable or current. TE reserves the right to make any changes to the information contained herein without prior notice. TE Connectivity assumes only those obligations set forth in the terms and conditions for this product and shall in no event be liable for any incidental, indirect, or consequential damages arising out of the sale, resale, use, or misapplication of the product. TE expressly disclaims any implied warranties with respect to the information contained herein, including, but not limited to, implied warranties of merchantability or fitness for a particular purpose. Dimensions, specifications and/or information contained herein are for reference purposes only and are subject to change without notice. Consult TE for the latest dimensions, specifications and/or information. Users of TE Connectivity products must make their own assessment as to whether the respective product is suitable for the respective desired application.

ED 01/25