FN9244ESR-3-06-20 ✔ ACTIVE

Schaffner | Schaffner FN9244

TE Internal #: 821166-SF

3 A, Filtered, 180 µA Leakage Current @ 250VAC, 50Hz, FASTON, 310 µA Leakage Current @ 120VAC, 60Hz, Schaffner FN9244, Inlet Filters

View on TE.com >

EMI & EMC Solutions > IEC Inlets > Inlet Filters > FN9244 / FN9244E IEC Inlet Filters – Superior EMC/RFI Performance with Optional Earth Line Choke







Filtering Requirements: **Filtered**

Current Rating (Max): **3 A**

Output Termination Type: **FASTON**

Pollution Degree: **PD2**

IP Rating: **IP40**

All FN9244 / FN9244E IEC Inlet Filters – Superior EMC/RFI Performance with Optional Earth Line Choke (177)

Features

Product Type Features

Filter Type	IEC Inlet Filter
Level Of Filtering	Inductor & Capacitor
Filtering Requirements	Filtered
Output Termination Type	FASTON

Electrical Characteristics

Capacitance Cy1	2.2
Inductance L1	13.45 µH
Capacitance Cx1	.1
Overvoltage Category	II
Current Rating (Max)	3 A
Leakage Current (Max) (120VAC, 60Hz)	310 µA
Leakage Current (Max) (250VAC, 50Hz)	180 µA

Body Features

Product Weight	38 g[1.34 oz]

Dimensions

Product Width	27.8 mm[1.09 in]
Product Length	44 mm[1.73 in]
Product Height	20.1 mm[.79 in]

Operation/Application

Cooling Method	Natural Convection

Industry Standards

Certified To	CSA 22.2 No. 8 1986, IEC/EN 60939, UL 1283
Pollution Degree	PD2
IP Rating	IP40
UL Flammability Rating	UL 94V-0

Product Compliance

For compliance documentation, visit the product page on TE.com>

EU RoHS Directive 2011/65/EU	Compliant with Exemptions
EU ELV Directive 2000/53/EC	Not Yet Reviewed
China RoHS 2 Directive MIIT Order No 32, 2016	未针对中国 RoHS 符合性进行审核 Not reviewed for China RoHS compliance
EU REACH Regulation (EC) No. 1907/2006	Current ECHA Candidate List: JUNE 2025 (250) Candidate List Declared Against: JUNE 2025 (250) Does not contain REACH SVHC
Halogen Content	Not Yet Reviewed for halogen content
Solder Process Capability	Not reviewed for solder process capability

Product Compliance Disclaimer

This information is provided based on reasonable inquiry of our suppliers and represents our current actual knowledge based on the information they provided. This information is subject to change. The part numbers that TE has identified as EU RoHS compliant have a maximum concentration of 0.1% by weight in homogenous materials for lead, hexavalent chromium, mercury, PBB, PBDE, DBP, BBP, DEHP, DIBP, and 0.01% for cadmium, or qualify for an exemption to these limits as defined in the Annexes of Directive 2011/65/EU (RoHS2). Finished electrical and electronic equipment products will be CE marked as required by Directive 2011/65/EU. Components may not be CE marked.Additionally, the part numbers that TE has identified as EU ELV compliant have a maximum concentration of 0.1% by weight in homogenous materials for lead, hexavalent chromium, and mercury, and 0.01% for cadmium, or qualify for an exemption to these limits as defined in the Annexes of Directive 2000/53/EC (ELV). Regarding the REACH Regulations, TE's information on SVHC in articles for this part number is still based on the European Chemical Agency (ECHA) 'Guidance on requirements for

substances in articles'(Version: 2, April 2011), applying the 0.1% weight on weight concentration threshold at the finished product level. TE is aware of the European Court of Justice ruling of September 10th, 2015 also known as O5A (Once An Article Always An Article) stating that, in case of 'complex object', the threshold for a SVHC must be applied to both the product as a whole and simultaneously to each of the articles forming part of its composition. TE has evaluated this ruling based on the new ECHA "Guidance on requirements for substances in articles" (June 2017, version 4.0) and will be updating its statements accordingly.

Compatible Parts



TE Part # CAT-PF6-LO
IL 13, IL 13 P, IL 19

Also in the Series | Schaffner FN9244



Inlet Filters(177)



Medical Inlet Filters(177)

Customers Also Bought



TE Part #DT04-2P
REC, 2P, GRY, N



TE Part #DT06-2S
PLG, 2P, GRY, N



TE Part #CAT-D48-ST273
DEUTSCH Connector Solid Contacts



TE Part #CAT-D487-W416
Wedgelocks: DEUTSCH DT



TE Part #114017-ZZ
SEALING PLUG, SIZE 12/16, WHT

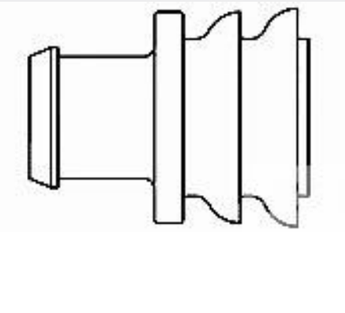

TE Part #281934-2
SINGLE WIRE SEAL



TE Part #CAT-AM71-CH8172
AMP SUPERSEAL 1.5MM, CONNECTOR HOUSING

Documents

CAD Files

Customer View Model

ENG_CVM_CVM_821166-SF_D.3d_stp.zip

English

Customer View Model

ENG_CVM_CVM_821166-SF_D.3d_igs.zip

English

Customer View Model

ENG_CVM_CVM_821166-SF_D.2d_dxf.zip

English

3D PDF

3D

By downloading the CAD file I accept and agree to the Terms and Conditions of use.

Datasheets & Catalog Pages

IEC Inlet Filters FN9244E

English

Agency Approvals

CB SE-93907

English