schaffner MORE POWER TO YOU is now part of TE connectivity

EMC/RFI Filter for Installations with Residual Current Device (RCD)



- Full functionality with RCDs according to IEC 61008 and new VDE 0664-110*
- Compatible with 30 mA RCDs up to 30 m motor cable for electric shock protection according to IEC 61008
- Compatible with 300 mA RCDs up to 100 m motor cable for fire protection according to IEC 60364-4-42 (VDE 0100-482)

Performance indicators

Attenuation performance



Approvals & Compliances

Features and Benefits

- Innovative low-leakage current filter with same smallest dimensions as FN 3258
- Significant reduction of leakage and ground currents caused by long motor cables
- Prevents unwanted fault shut-downs from RCDs in machines and process automation equipment
- Patented filter design avoiding early saturation and ringing effects
- Excellent attenuation compliant with: C1 limits EN 61800-3 with 30 meter motor cable and 30 mA RCD (electric shock protection)**
- C2 limits EN 61800-3 with 100 meter motor cable and 300 mA RCD (fire protection)

Typical Applications

- Three-phase variable speed drives (VSD), servo drives, and inverters
- Machinery and process automation equipment
- Building automation, HVAC equipment, pumps, ventilation, and elevators
- Conveyors, handling and storage systems, and cranes
- Machine tools, wood working machines, and printing machines

Technical Specifications

Maximum continuous operating voltage	3x520/300 VAC
Nominal operating voltage	480 VAC
Rated currents	7 to 180 A @ 50°C
Overload capability	4x rated current at switch on, 1.5x rated current for 1 minute, once per hour
Operating frequency	DC to 60 Hz
High potential test voltage	P –> E 2750 VDC for 2 sec P –> P 2250 VDC for 2 sec
Temperature range (operation and storage)	-25°C to +100°C (25/100/21)
Protection category	IP 20
Flammability corresponding to	UL 94 V-0
Design corresponding to	UL 1283, CSA 22.2 No. 8 1986, IEC/EN 60939
MTBF (Mil-HB-217F)	>300,000 h @ 50°C/480 V

* If supply voltage is contaminated with harmonics according to IEC 61000-2-4, class 2, where odd-numbered multiplies of three are limited to 30%.

** Filter types 7 A up to 42 A: C1, 30 m, 30 mA; 55 A: C2, 30 m, 30 mA; 75 A up to 180 A: C2, 100 m, 300 mA

Typical electrical schematic

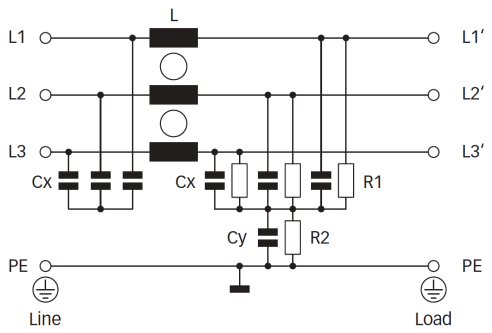

Filter Selection Table

Filter	Rated current @ 50°C (40°C) [A]	Typical drive power rating* [kW]	Leakage current @ 520 VAC/50 Hz [mA]**	Power loss @ 25°C/50 Hz [W]	Input/Output connections	Weight [kg]
FN3268-7-44	7 (7.7)	4	2.5	4.5	-44	0.5
FN3268-16-44	16 (17.5)	7.5	2.6	6.1	-44	0.8
FN3268-30-33	30 (32.9)	18.5	2.6	13.5	-33	1.2
FN3268-42-33	42 (46.0)	22	2.6	17.4	-33	1.4
FN3268-55-34	55 (60.2)	37	2.6	18.1	-34	2.2
FN3268-75-34	75 (82.2)	45	10.8	25.3	-34	2.9
FN3268-100-35	100 (109.5)	55	9.6	30.0	-35	4.1
FN3268-130-35	130 (142.4)	75	14.2	38.0	-35	4.6
FN3268-180-40	180 (197.1)	110	17.4	48.6	-40	6.0

* Calculated at rated current, 440 VAC and cos phi=0.8. The exact value depends upon the efficiency of the drive, the motor and the entire application.
** Standardized calculated leakage current acc. IEC60939 under normal operating conditions.

Typical Filter Attenuation

Per CISPR 17; A=50 Ω/50 Ω sym; B=50 Ω/50 Ω asym; C=0.1 Ω/100 Ω sym; D=100 Ω/0.1 Ω sym

7 to 42 A types

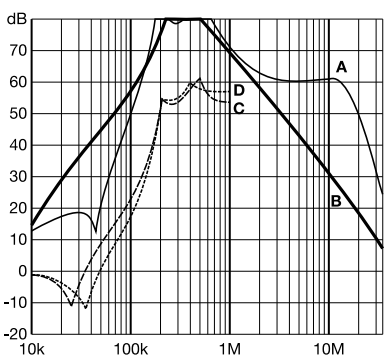

55 to 100 A types

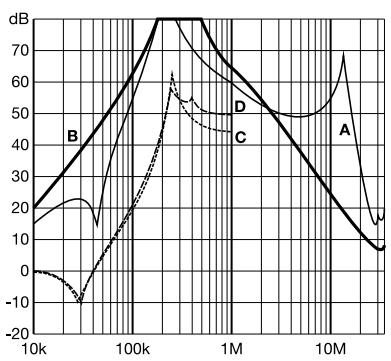

130 and 180 A types

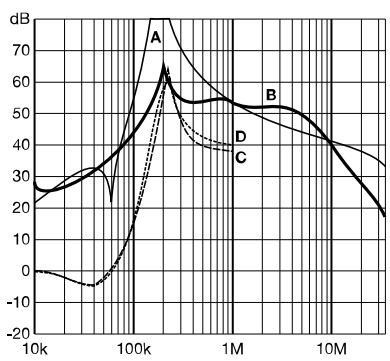

Installation

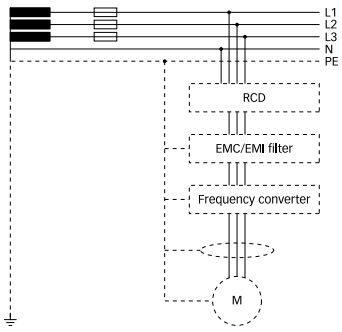

Typical installation with RCD, EMC/EMI filter and motor drive system

- RCD
  Please note that for electrical devices with 6-pulse rectifiers at line input, like three-phase motor drives, a RCD type B or B+ is required. RCD with time delay are needed to prevent unwanted fault trip at switch on or voltage spikes. These RCD types B with time delay have often an added letter “S” or “K”, please ask the supplier for correct type. Caution: Please validate system with chosen RCD to guarantee functionality.

- EMC/EMI filter FN 3268
  Filter types from 7 to 55 A are designed to be compatible with 30 mA RCDs according to IEC 61008 and new VDE 0664-110 standards. Filters from 75 up to 180 A are designed to be compatible with 300 mA RCDs. Install the filter as close as possible at line side of the motor drive. Regarding correct EMC installation, please refer to the EMC installation guide in the manual from motor drive supplier.

- Motor drive
  Please set the PWM pulse pattern of the variable speed motor drive fixed to 4 kHz. Other pulse patterns cause higher leakage currents. Filter designs with other pulse pattern than 4 kHz are possible upon request.

- Motor cable length
  Motor cable length should not exceed 30 meters for 7 up to 55 A filter types to fulfill class C1 of recommended standard EN 61800-3. For 75 up to 180 A filters, cable length should not exceed 100 meters to fulfill class C2.

- Internal EMC/EMI components
  Please disconnect all internal Y-capacitors (internal EMC/EMI filters) in the motor drive, because these capacitors cause additional leakage currents.

- Harmonics on line voltage
  High voltage harmonics can create additional system leakage currents. FN 3268 filters are tested under following conditions: Supply voltage is contaminated with harmonics according to IEC 61000-2-4, class 2, where odd-numbered multiplies of three are limited to 30%.

Mechanical Data

FN 3268

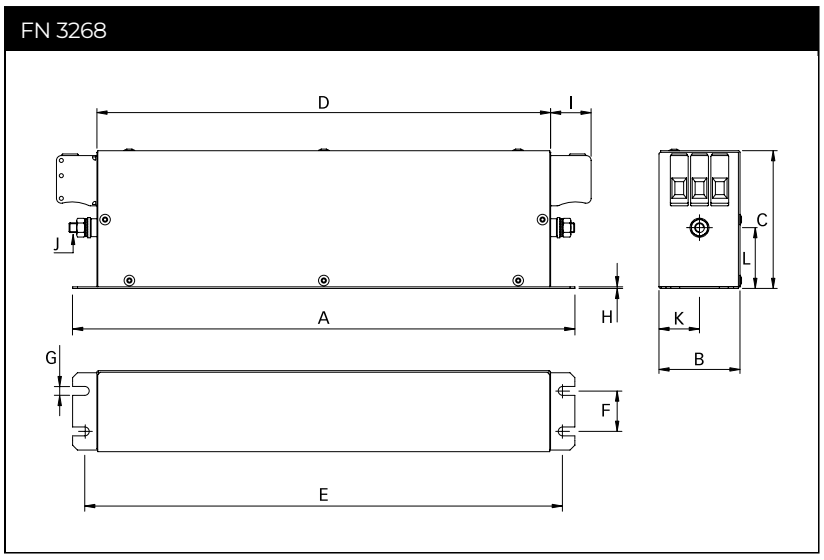

Note: in favour of a better readability, connectors and earth studs are not shown in the horizontal projection.

Dimensions

	7 A	16 A	30 A	42 A	55 A	75 A	100 A	130 A	180 A
A	190	250	270	310	250	270	270	270	380
B	40	45	50	50	85	80	90	90	120
C	70	70	85	85	90	135	150	150	170
D	160	220	240	280	220	240	240	240	350
E	180	235	255	295	235	255	255	255	365
F	20	25	30	30	60	60	65	65	102
G	4.5	5.4	5.4	5.4	5.4	6.5	6.5	6.5	6.5
H	1	1	1	1	1	1.5	1.5	1.5	1.5
I	22	22	25	25	39	39	45	45	51
J	M5	M5	M5	M6	M6	M6	M10	M10	M10
K	20	22.5	25	25	42.5	40	45	45	60
L2	29.5	29.5	39.5	37.5	26.5	70.5	64	64	47

All dimensions in mm; 1 inch = 25.4 mm
Tolerances according: ISO 2768-m/EN 22768-m

Filter Input/Output Connector Cross Sections

	-33	-34	-35	-40	-44
Solid wire	16 mm^2	35 mm^2	50 mm^2	95 mm^2	10 mm^2
Flex wire	10 mm^2	25 mm^2	50 mm^2	95 mm^2	6 mm^2
AWG type wire	AWG 6	AWG 2	AWG 1/0	AWG 4/0	AWG 8
Recommended torque	1.5-1.8 Nm	4.0-4.5 Nm	7-8 Nm	17-20 Nm	1.0-1.2 Nm

Please visit www.schaffner.com to find more details on filter connectors.

We are here to help



Read more insights from TE's experts:

Schaffner is now part of TE Connectivity

Learn more about Corcom products

Connect With Us

We make it easier to connect with our experts and are ready to provide the support you need.
Visit **te.com/support** to chat with a Product Information Specialist.

Contact a TE expert today

te.com

©2025 TE Connectivity plc. All Rights Reserved.

TE Connectivity, TE, TE connectivity (logo), and EVERY CONNECTION COUNTS, ECOsine, Schaffner are trademarks owned or licensed by TE Connectivity plc. family of companies. All other logos, products and/or company names referred to herein might be trademarks of their respective owners.

While TE has made every reasonable effort to ensure the accuracy of the information in this document, TE does not guarantee that it is error-free, nor does TE make any other representation, warranty or guarantee that the information is accurate, correct, reliable or current. TE reserves the right to make any changes to the information contained herein without prior notice. TE Connectivity assumes only those obligations set forth in the terms and conditions for this product and shall in no event be liable for any incidental, indirect, or consequential damages arising out of the sale, resale, use, or misapplication of the product. TE expressly disclaims any implied warranties with respect to the information contained herein, including, but not limited to, implied warranties of merchantability or fitness for a particular purpose. Dimensions, specifications and/or information contained herein are for reference purposes only and are subject to change without notice. Consult TE for the latest dimensions, specifications and/or information. Users of TE Connectivity products must make their own assessment as to whether the respective product is suitable for the respective desired application.

ED 01/25

schaffner MORE POWER TO YOU is now part of TE connectivity