FN2220-300-99-C0000-R90 ✔ ACTIVE

Schaffner | Schaffner FN2220

TE Internal #: 822720-SF

300 A DC Filter, 1000 VDC, Busbar Input, Busbar Output, Schaffner FN2220

View on TE.com >

EMI & EMC Solutions > EMC Filters > Power Line Filters > DC Filters > Ultra-Compact DC-Busbar EMC/RFI Filter for EV Charging Applications



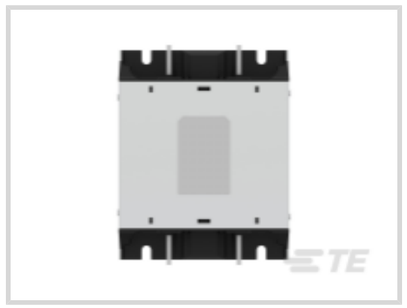



Current Rating: **300 A**

Operating Voltage: **1000 VDC**

Input Termination Type: **Busbar**

Output Termination Type: **Busbar**

All Ultra-Compact DC-Busbar EMC/RFI Filter for EV Charging Applications (32)

Features

Product Type Features

Filtering Requirements	Unfiltered
Input Termination Type	Busbar
Output Termination Type	Busbar

Electrical Characteristics

Overvoltage Category	III
Current Rating	300 A
Operating Voltage	1000 VDC

Body Features

Product Weight	3 kg[6.614 lb]

Mechanical Attachment

Product Mount Type	Chassis Mount

Dimensions

Product Width	163 mm[6.41 in]

Product Length	200 mm[7.87 in]
Product Height	95 mm[3.74 in]

Usage Conditions

Operating Temperature Range	-40 – 100 °C[-40 – 212 °F]

Operation/Application

Cooling Method	Natural Convection

Industry Standards

IP Rating	IP00
UL Flammability Rating	UL 94V-0
Pollution Degree	PD2
Certified To	CSA 22.2 No. 8 1986, EN 60721-3, EN 62109, IEC/EN 60939, UL 1283

Product Compliance

For compliance documentation, visit the product page on TE.com>

EU RoHS Directive 2011/65/EU	Compliant
EU ELV Directive 2000/53/EC	Not Yet Reviewed
China RoHS 2 Directive MIIT Order No 32, 2016	有害物质含量符合标准要求 No Restricted Substance(s) Above Threshold
EU REACH Regulation (EC) No. 1907/2006	Current ECHA Candidate List: JUNE 2025 (250) Not Yet Reviewed
Halogen Content	Not Yet Reviewed for halogen content
Solder Process Capability	Not reviewed for solder process capability

Product Compliance Disclaimer

This information is provided based on reasonable inquiry of our suppliers and represents our current actual knowledge based on the information they provided. This information is subject to change. The part numbers that TE has identified as EU RoHS compliant have a maximum concentration of 0.1% by weight in homogenous materials for lead, hexavalent chromium, mercury, PBB, PBDE, DBP, BBP, DEHP, DIBP, and 0.01% for cadmium, or qualify for an exemption to these limits as defined in the Annexes of Directive 2011/65/EU (RoHS2). Finished electrical and electronic equipment products will be CE marked as required by Directive 2011/65/EU. Components may not be CE marked.Additionally, the part numbers that TE has identified as EU ELV compliant have a maximum concentration of 0.1% by weight in homogenous materials for lead, hexavalent chromium, and mercury, and 0.01% for cadmium, or qualify for an exemption to these limits as defined in the Annexes of Directive 2000/53/EC (ELV). Regarding the REACH Regulations, TE's information on SVHC in articles for this part number is still based on the European Chemical Agency (ECHA) 'Guidance on requirements for substances in articles'(Version: 2, April 2011), applying the 0.1% weight on weight concentration threshold at the finished product level. TE is aware of the European Court of Justice ruling of September 10th, 2015 also known as O5A (Once An Article Always An Article) stating that, in case of 'complex object', the threshold for a SVHC must be applied to both the product as a whole and simultaneously to each of the articles forming part of its composition. TE has evaluated this ruling based on the new ECHA "Guidance on requirements for substances in articles" (June 2017, version 4.0) and will be updating its statements accordingly.

Compatible Parts



TE Part # CAT-P99-F22203040
Ultra-Compact DC-Busbar EMC/RFI Filter for EV Charging Applications

Also in the Series | Schaffner FN2220



DC Filters(32)

Customers Also Bought

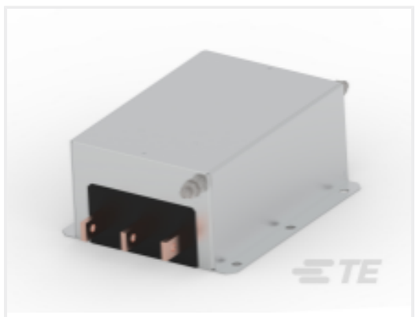

TE Part #800967-SF
FN3359-600-99



TE Part #822422-SF
FN2230-300-99-C2022-R99

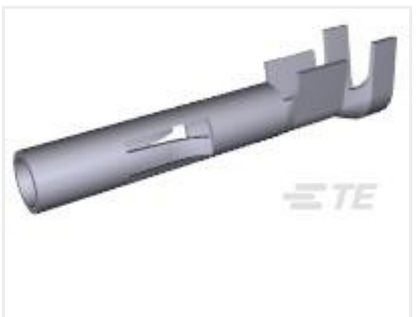

TE Part #350550-1
UMNL SOK 20-14 PTPBR L/P



TE Part #1-480701-0
03P UMNL CAP HSG NATL

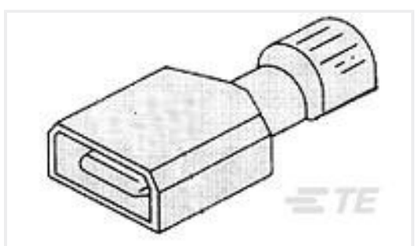

TE Part #3-520107-2
ULTRA-FAST 250 ASY TAB 16-14 AWG TPBR



TE Part #770678-1
SEAL PLUG, AMPSEAL

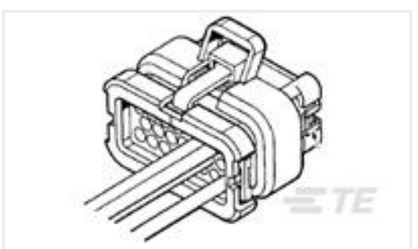

TE Part #770680-4
23POS,AMPSEAL,SOC HSG ASSY,SLD, COD 4



TE Part #1776295-3
TSB23003DSHT=EUROPA TM BLK, 8MM



TE Part #2103124-5

HVA280 2P HEADER ASSY, KEY E

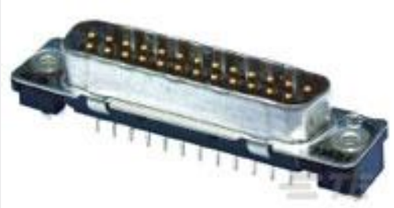

TE Part #1-5745968-5

25 PLUG SP/FMS SCRLK

Documents

CAD Files

3D PDF

3D

Customer View Model

ENG_CVM_CVM_822720-SF_F.2d_dxf.zip

English

Customer View Model

ENG_CVM_CVM_822720-SF_F.3d_stp.zip

English

Customer View Model

ENG_CVM_CVM_822720-SF_F.3d_igs.zip

English

By downloading the CAD file I accept and agree to the Terms and Conditions of use.

Datasheets & Catalog Pages

DC Filter for EV-Charging FN2220, FN2230 and FN2240

English

Agency Approvals

CB_SE-106144M1

English