FCB-205-0115M ✔ ACTIVE

CII | CII FCB-205 Series

TE Internal #: 4-1617763-9

General Purpose Power Relay, DC, Polarized, Monostable, 2 Form C DPDT-CO, 5 A Contact Rating, 12 VDC Coil Voltage, Socket Mount, CII FCB-205 Series

View on TE.com >

Relays & Contactors > Electromechanical Relays



Relay & Contactor Type: **General Purpose Power Relay**

Coil Magnetic System: **Polarized, Monostable**

Contact Arrangement: **2 Form C DPDT-CO**

Current Type: **DC**

Contact Current Rating: **5 A**

Features

Product Type Features

Relay & Contactor Type	General Purpose Power Relay

Configuration Features

Contact Arrangement	2 Form C DPDT-CO

Electrical Characteristics

Coil Resistance	125 Ω
Contact Current Rating	5 A
Coil Voltage Rating	12 VDC

Body Features

Enclosure Type	Hermetically Sealed

Contact Features

Contact Material	Silver Cadmium Oxide
Terminal Plating	Gold

Termination Features

Main Termination & Connection Type	Socket Pins
Coil Termination & Connection Type	Socket Pins

Mechanical Attachment

Product Mounting Feature Type	Mounting Brackets

Product Mount Type	Socket Mount

Usage Conditions

Operating Temperature Range	-70 – 125 °C[-94 – 257 °F]
Environmental Ambient Temperature (Max)	125 °C[257 °F]

Operation/Application

Vibration Resistance	30G's, 70 – 3000Hz
Shock Resistance	200G's, 6ms
Coil Magnetic System	Polarized, Monostable
Current Type	DC

Other

Contact Current Class	>2 – ≤5 A

Product Compliance

For compliance documentation, visit the product page on TE.com>

EU RoHS Directive 2011/65/EU	Compliant
EU ELV Directive 2000/53/EC	Not Compliant
China RoHS 2 Directive MIIT Order No 32, 2016	有害物质含量符合标准要求 No Restricted Substance(s) Above Threshold
EU REACH Regulation (EC) No. 1907/2006	Current ECHA Candidate List: JUNE 2025 (250) Candidate List Declared Against: JAN 2025 (247) SVHC > Threshold: Cadmium oxide (10% in Component Part) **Article Safe Usage Statements:** Use personal protective equipment as required. Do not eat, drink or smoke when using this product. Recycle if possible and dispose of the article by following all applicable governmental regulations relevant to your geographic location.
Halogen Content	Low Halogen - Br, Cl, F < 900 ppm per homogenous material. Also BFR/CFR/PVC Free
Solder Process Capability	Not lead free process capable

Product Compliance Disclaimer

This information is provided based on reasonable inquiry of our suppliers and represents our current actual knowledge based on the information they provided. This information is subject to change. The part numbers that TE has identified as EU RoHS compliant have a maximum concentration of 0.1% by weight in homogenous materials for lead, hexavalent chromium, mercury, PBB, PBDE, DBP, BBP, DEHP, DIBP, and 0.01% for cadmium, or qualify for an exemption to these limits as defined in the Annexes of Directive 2011/65/EU (RoHS2). Finished electrical and electronic equipment products will be CE marked as required by Directive 2011/65/EU. Components may not be CE marked. Additionally, the part numbers that TE has identified as EU ELV compliant have a maximum concentration of 0.1% by weight in homogenous materials for lead, hexavalent chromium, and mercury, and 0.01% for cadmium, or qualify for an exemption to these limits as defined in the Annexes of Directive 2000/53/EC (ELV). Regarding the REACH Regulation, the information TE provides

on SVHC in articles for this part number is based on the latest European Chemicals Agency (ECHA) 'Guidance on requirements for substances in articles' posted at this URL: https://echa.europa.eu/guidance-documents/guidance-on-reach

Compatible Parts



TE Part # 7-1617760-9
FCB-405-0619M=M83536/6-019M

Also in the Series | CII FCB-205 Series

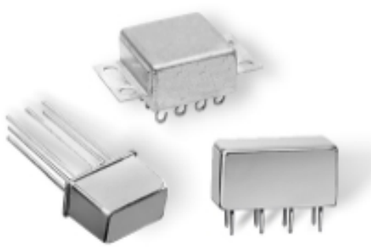

DC Relays(41)



Electromechanical Relays(41)



Plug-In Relays(10)

Customers Also Bought



TE Part #CAT-R21-73106549
Bulbous Heat Shrink Boots: Lipped, Right Angle

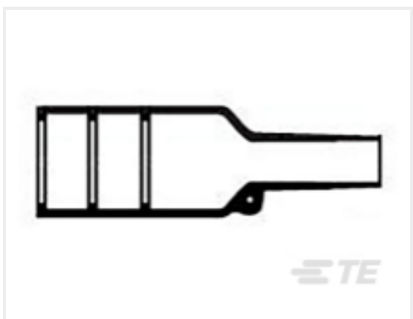

TE Part #CAT-R21-731072
Bulbous Heat Shrink Boots: Lipped, Straight



TE Part #1SNA115661R2100
M4/8.SFL



TE Part #1SNA231030R2400
RC510 1->100 HORIZONTAL

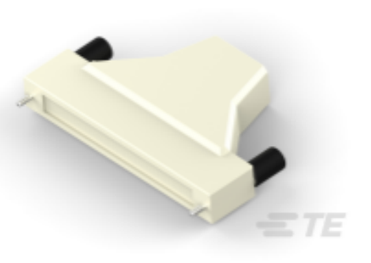

TE Part #5749854-1
100 50SR BSHELL KIT,M JSCREW

TE Part #AAC7899-00
PE93-7.5-T

Documents

Product Drawings

FCB-205-0115M=M83536/1-015M

English

CAD Files

3D PDF

3D

Customer View Model

ENG_CVM_CVM_4-1617763-9_D.2d_dxf.zip

English

Customer View Model

ENG_CVM_CVM_4-1617763-9_D.3d_igs.zip

English

Customer View Model

ENG_CVM_CVM_4-1617763-9_D.3d_stp.zip

English

By downloading the CAD file I accept and agree to the Terms and Conditions of use.

Datasheets & Catalog Pages

5-1773450-5_sec5_FCB-205

English