MMK5683K63J01L16.5TR18

Aliases (F601JF683K063L, MMK5683K63J01L16,5TR18)

Obsolete

Recommended Replacement Series R60

MMK/F601, Film, Metallized Polyester, General Purpose, 0.068 uF, 10%, 63 VDC, 85°C, 5 mm

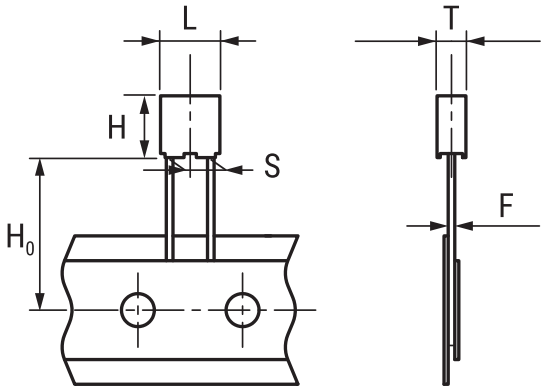

Click here for the 3D model.

General Information	
Series	MMK/F601
Dielectric	Metallized Polyester
Style	Radial
Features	DC Multipurpose Applicatiions
RoHS	Yes
Termination	Tinned Wire
Lead	Wire Leads
Typical Component Weight	0.239 g
Notes	*Obsolete. Please check possible alternative parts in R82, RSB (pitch 5mm), R66 (pitch 7.5mm) and R60 (pitch 10-37.5mm).

Dimensions	
L	7.2mm MAX
H	6.5mm MAX
T	2.5mm MAX
S	5mm +0.6/-0.1mm
H0	16mm NOM
F	0.5mm NOM

Packaging Specifications	
Packaging	T&R
Packaging Quantity	2500

Specifications	
Capacitance	0.068 uF
Tolerance	10%
Voltage DC	63 VDC, 48.8 VDC (100C)
Voltage AC	40 VAC
Temperature Range	-55/+100°C
Rated Temperature	85°C
Dissipation Factor	0.8% 1kHz, 1.2% 10kHz, 2.5% 100kHz
Insulation Resistance	15 GOhms
Max dV/dt	25 V/us
Inductance	6 nH

Statements of suitability for certain applications are based on our knowledge of typical operating conditions for such applications, but are not intended to constitute - and we specifically disclaim - any warranty concerning suitability for a specific customer application or use. This Information is intended for use only by customers who have the requisite experience and capability to determine the correct products for their application. Any technical advice inferred from this Information or otherwise provided by us with reference to the use of our products is given gratis, and we assume no obligation or liability for the advice given or results obtained.

© 2006 - 2026 YAGEO