NOT FOR NEW DESIGN

General Purpose, Pulse and DC Transient Suppression

PHE450 Double Metallized Polypropylene Film

KEMET a YAGEO company

Overview

The PHE450 Series is a polypropylene dielectric with double metallized polyester film as electrodes. The capacitor is encapsulated in self-extinguishing resin, in a box of material meeting the requirements of UL 94 V–0.

Applications

Typical applications include high frequency applications with high current stress, such as deflection circuits in televisions and protection circuits in switched mode power supply (SMPS) and electronic ballasts.

ATTENTION -- This series was replaced by the R76 series. Please click on the link to the R76 series datasheet HERE.

Benefits

- Rated voltage: 250 – 3,000 VDC
- Rated voltage: 180 – 1,000 VAC
- Capacitance range: 0.00033 – 10 µF
- Lead spacing: 7.5 – 37.5 mm
- Capacitance tolerance: ±5%, other tolerances on request
- Climatic category: 55/105/56, IEC 60068–1
- Tape & Reel packaging in accordance with IEC 60286–2
- RoHS Compliant and lead-free terminations
- Category temperature range of −55°C to +105°C

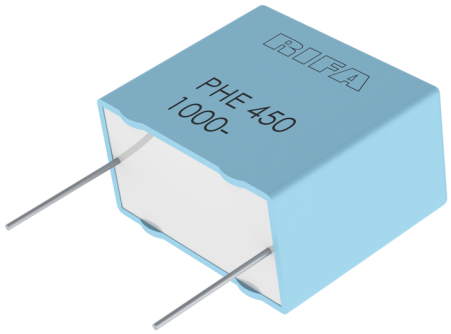

Customer Part Number

PHE450	P	B	5180	J	B04	R06
Series	Rated Voltage (VDC)	Lead Spacing (mm)	Capacitance Code (pF)	Capacitance Tolerance	Optional Box Code	Packaging
Metallized Polypropylene	H = 250 K = 400 M = 630 P = 1,000 R = 1,600 S = 2,000 T = 2,500 X = 3,000	K = 7.5 A = 10.0 B = 15.0 D = 22.5 F = 27.5 T = 27.5 low profile case R = 37.5	The last three digits represent significant figures. The first digit specifies the total number of digits.	J = ±5% Other tolerances on request	See Dimension Table	See Ordering Options Table

KEMET Internal Part Number

F	450	B	D	183	J	1K0	C
Capacitor Class	Series	Lead Spacing (mm)	Size Code	Capacitance Code (pF)	Capacitance Tolerance	Rated Voltage (VDC)	Packaging
F = Film	Metallized Polypropylene	K = 7.5 A = 10.0 B = 15.0 D = 22.5 F = 27.5 T = 27.5 low profile case R = 37.5	See Dimension Table	First two digits represent significant figures. Third digit specifies number of zeros.	J = ±5% Other tolerances on request	250 = 250 400 = 400 630 = 630 1K0 = 1,000 1K6 = 1,600 2K0 = 2,000 2K5 = 2,500 3K0 = 3,000	See Ordering Options Table

© KEMET Electronics Corporation • KEMET Tower • One East Broward Boulevard
Fort Lauderdale, FL 33301 USA • 954-766-2800 • www.kemet.com

Ordering Options Table

Lead Spacing Nominal (mm)	Type of Leads and Packaging	Lead Length (mm)	KEMET Lead and Packaging Code	Legacy Lead and Packaging Code
7.5	**Standard Lead and Packaging Options**			
	Bulk (Bag) – Short Leads	5 +0/−1	C	R05
	Ammo Pack	H_0= 18.5 ±0.5	R	R17TA
	Bulk (Bag) – Long Leads	17 +0/−1	A	R17
	Other Lead and Packaging Options			
	Bulk (Bag) – Maximum Length Leads	20 +5/−0	ALL0L	R20
	Tape & Reel (Standard Reel)	H_0= 18.5 ±0.5	L	R17T0
	Tape & Reel (Large Reel)	H_0= 18.5 ±0.5	P	R17T1
10	**Standard Lead and Packaging Options**			
	Bulk (Bag) – Short Leads	5 +0/−1	C	R05
	Bulk (Bag) – Long Leads	17 +0/−1	A	R17
	Other Lead and Packaging Options			
	Bulk (Bag) – Maximum Length Leads	20 +5/−0	ALL0L	R20
	Tape & Reel (Standard Reel)	H_0= 18.5 ±0.5	L	R17T0
	Tape & Reel (Large Reel)	H_0= 18.5 ±0.5	P	R17T1
15	**Standard Lead and Packaging Options**			
	Bulk (Bag) – Short Leads	6 +0/−1	C	R06
	Bulk (Bag) – Long Leads	17 +0/−1	A	R17*
	Other Lead and Packaging Options			
	Bulk (Bag) – Maximum Length Leads	25 +5/−0	ALR0L	R25
	Tape & Reel (Standard Reel)	H_0= 18.5 ±0.5	L	R17T0
	Tape & Reel (Large Reel)	H_0= 18.5 ±0.5	P	R17T1
Native 15 formed to 7.5	Ammo Pack	H_0= 18.5 ±0.5	XLAF1	R25XA
	Tape & Reel (Standard Reel)	H_0= 18.5 ±0.5	XLTF1	R25X2
22.5	**Standard Lead and Packaging Options**			
	Bulk (Tray) – Short Leads	6 +0/−1	C	R06L2
	Other Lead and Packaging Options			
	Bulk (Tray) – Maximum Length Leads	30 +5/−0	ALW0L	R30L2
	Tape & Reel (Standard Reel)	H_0= 18.5 ±0.5	L	R17T0
	Tape & Reel (Large Reel)	H_0= 18.5 ±0.5	P	R17T1

** Exception: F450BD222J2K0A: 30 +5/-0 mm bulk*

Ordering Options Table cont.

Lead Spacing Nominal (mm)	Type of Leads and Packaging	Lead Length (mm)	KEMET Lead and Packaging Code	Legacy Lead and Packaging Code
27.5	**Standard Lead and Packaging Options**			
	Bulk (Tray) – Short Leads	6 +0/−1	C	R06L2
	Other Lead and Packaging Options			
	Bulk (Tray) – Maximum Length Leads	30 +5/−0	ALW0L	R30L2
	Tape & Reel (Large Reel)	H_0= 18.5 ±0.5	P	R17T1
37.5	**Standard Lead and Packaging Options**			
	Bulk (Tray) – Short Leads	6 +0/−1	C	R06L2
	Other Lead and Packaging Options			
	Bulk (Tray) – Maximum Length Leads	30 +5/−0	ALW0L	R30L2

Dimensions – Millimeters

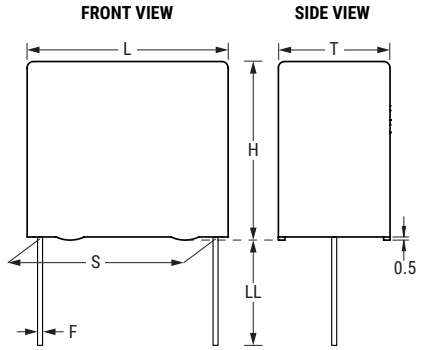

KEMET Size Code	Legacy Size Code	S		T		H		L		F	
		Nominal	Tolerance	Nominal	Tolerance	Nominal	Tolerance	Nominal	Tolerance	Nominal	Tolerance
KG	K01	7.5	±0.4	4	0/−0.5	8	0/−0.5	10	0/−0.5	0.6	±0.05
KK	K03	7.5	±0.4	5	0/−0.5	11	0/−0.5	10	0/−0.5	0.6	±0.05
KM	K04	7.5	±0.4	6	0/−0.5	12	0/−0.5	10.5	0/−0.5	0.6	±0.05
AG	A01	10	±0.4	4	0/−0.5	9	0/−0.5	13	0/−0.5	0.6	±0.05
AH	A02	10	±0.4	4.5	0/−0.5	10.5	0/−0.5	13	0/−0.5	0.6	±0.05
AK	A03	10	±0.4	5	0/−0.5	11	0/−0.5	13	0/−0.5	0.6	±0.05
AP	A04	10	±0.4	6	0/−0.5	12	0/−0.5	13	0/−0.5	0.6	±0.05
BD	B04	15	±0.4	5.5	0/−0.5	10.5	0/−0.5	18	0/−0.5	0.8	±0.05
BE	B05	15	±0.4	5.5	0/−0.5	12.5	0/−0.5	18	0/−0.5	0.8	±0.05

Note: See Ordering Options Table for lead length (LL) options.

Dimensions – Millimeters cont.

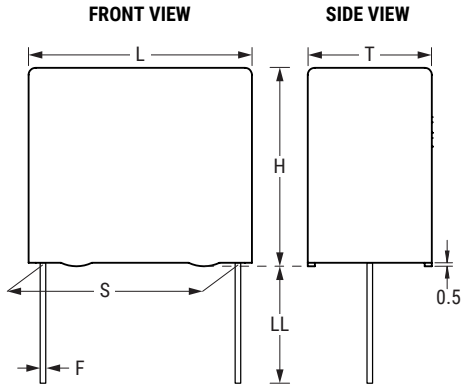

KEMET Size Code	Legacy Size Code	S		T		H		L		F	
		Nominal	Tolerance	Nominal	Tolerance	Nominal	Tolerance	Nominal	Tolerance	Nominal	Tolerance
BL	B06	15	±0.4	7.5	0/−0.5	14.5	0/−0.5	18	0/−0.5	0.8	±0.05
BJ	B10	15	±0.4	6.5	0/−0.5	12.5	0/−0.5	18	0/−0.5	0.8	±0.05
BQ	B11	15	±0.4	8.5	0/−0.5	16	0/−0.5	18	0/−0.5	0.8	±0.05
BM	B12	15	±0.4	8	0/−0.5	15	0/−0.5	18	0/−0.5	0.8	±0.05
BV	B14	15	±0.4	9.5	0/−0.5	17.5	0/−0.5	18	0/−0.5	0.8	±0.05
BY	B16	15	±0.4	11	0/−0.5	19	0/−0.5	18	0/−0.5	0.8	±0.05
DD	D13	22.5	±0.4	6.5	0/−0.5	14.5	0/−0.5	26	0/−0.5	0.8	±0.05
DH	D14	22.5	±0.4	8	0/−0.5	16	0/−0.5	26	0/−0.5	0.8	±0.05
DM	D15	22.5	±0.4	9	0/−0.5	18.5	0/−0.5	26	0/−0.5	0.8	±0.05
DT	D16	22.5	±0.4	11	0/−0.5	21.5	0/−0.5	26	0/−0.5	0.8	±0.05
DF	D17	22.5	±0.4	7	0/−0.5	16.5	0/−0.5	26	0/−0.5	0.8	±0.05
DR	D18	22.5	±0.4	10.5	0/−0.5	19	0/−0.5	26	0/−0.5	0.8	±0.05
DY	D19	22.5	±0.4	15.5	0/−0.5	24.5	0/−0.5	26	0/−0.5	0.8	±0.05
DW	D20	22.5	±0.4	13.5	0/−0.5	23	0/−0.5	26	0/−0.5	0.8	±0.05
FK	F03	27.5	±0.4	13.5	0/−0.7	23	0/−0.7	31.5	0/−0.7	0.8	±0.05
FE	F11	27.5	±0.4	10.5	0/−0.7	20.5	0/−0.7	31.5	0/−0.7	0.8	±0.05
FG	F12	27.5	±0.4	11.5	0/−0.7	22.5	0/−0.7	31.5	0/−0.7	0.8	±0.05
FM	F13	27.5	±0.4	14.5	0/−0.7	24.5	0/−0.7	31.5	0/−0.7	0.8	±0.05
FR	F14	27.5	±0.4	17.5	0/−0.7	28	0/−0.7	31.5	0/−0.7	0.8	±0.05
FS	F15	27.5	±0.4	19	0/−0.7	29	0/−0.7	31.5	0/−0.7	0.8	±0.05
FV	F16	27.5	±0.4	21	0/−0.7	30	0/−0.7	31.5	0/−0.7	0.8	±0.05
FH	F17	27.5	±0.4	21	0/−0.7	12.5	0/−0.7	31.5	0/−0.7	0.8	±0.05
FT	F18	27.5	±0.4	31	0/−0.7	19	0/−0.7	31.5	0/−0.7	0.8	±0.05
FQ	F19	27.5	±0.4	27.5	0/−0.7	16	0/−0.7	31.5	0/−0.7	0.8	±0.05
RK	R02	37.5	±0.4	16.5	0/−0.7	32	0/−0.7	41	0/−0.7	1	±0.05
RM	R03	37.5	±0.4	19	0/−0.7	36	0/−0.7	41	0/−0.7	1	±0.05
RH	R04	37.5	±0.4	15	0/−0.7	26	0/−0.7	41	0/−0.7	1	±0.05
RF	R05	37.5	±0.4	13	0/−0.7	24	0/−0.7	41	0/−0.7	1	±0.05
RP	R06	37.5	±0.4	21	0/−0.7	38	0/−0.7	41	0/−0.7	1	±0.05
RS	R08	37.5	±0.4	28	0/−0.7	43	0/−0.7	41	0/−0.7	1	±0.05

Note: See Ordering Options Table for lead length (LL) options.

Performance Characteristics

Sections	1	1	1	2	1	2	2	2	3	3
Voltage Range (VDC)	250	400	630	630	1,000	1,000	1,600	2,000	2,500	3,000
Voltage Range (VAC)	180	250	300	400	375	600	650	700	900	1,000
Capacitance Range (μF)	0.00033 – 0.033	0.00033 – 5.6	0.00033 – 0.039	0.01 – 3.3	0.00033 – 0.018	0.0039 – 2.2	0.0027 – 1	0.001 – 0.68	0.0010 – 0.33	0.001 – 0.033
Capacitance Values	In accordance with IEC E12 series									
Capacitance Tolerance	±5%, other tolerances on request									
Category Temperature Range	−55°C to +105°C									
Rated Temperature	+85°C									
Voltage Derating	The rated voltage is decreased with 1.3%/°C between +85°C and +105°C									
Climatic Category	IEC 60068–1, 55/105/56/B									
Passive Flammability	Category B according to IEC 60065									
Maximum Pulse Steepness	dV/dt according to Table 1. For peak to peak voltages lower than rated voltage ($V_{PP} < V_R$), the specified dV/dt can be multiplied by the factor V_R/V_{PP}.									
Self-Inductance	Approximately 6 nH/cm for the total length of capacitor winding and the leads.									

Dissipation Factor tanδ	Maximum Values at +23°C			
		C ≤ 0.1 μF	0.1 μF < C ≤ 1.0 μF	C > 1.0 μF
	1 kHz	0.0003	0.0003	0.0003
	10 kHz	0.0004	0.0006	–
	100 kHz	0.0015	–	–

Insulation Resistance	Measured at +23°C, 100 VDC 60 seconds for V_R < 500 VDC and at 500 VDC for V_R ≥ 500 VDC	
	Minimum Values Between Terminals	
	C ≤ 0.33 μF	≥ 100,000 MΩ
	C > 0.33 μF	≥ 30,000 MΩ • μF
	Minimum Values Between Terminals and Case	
		≥ 100 000 MΩ

Derating of V_{rms} vs. Frequency, +85°C Ambient Temperature and 10°C Internal Heating, Typical Values

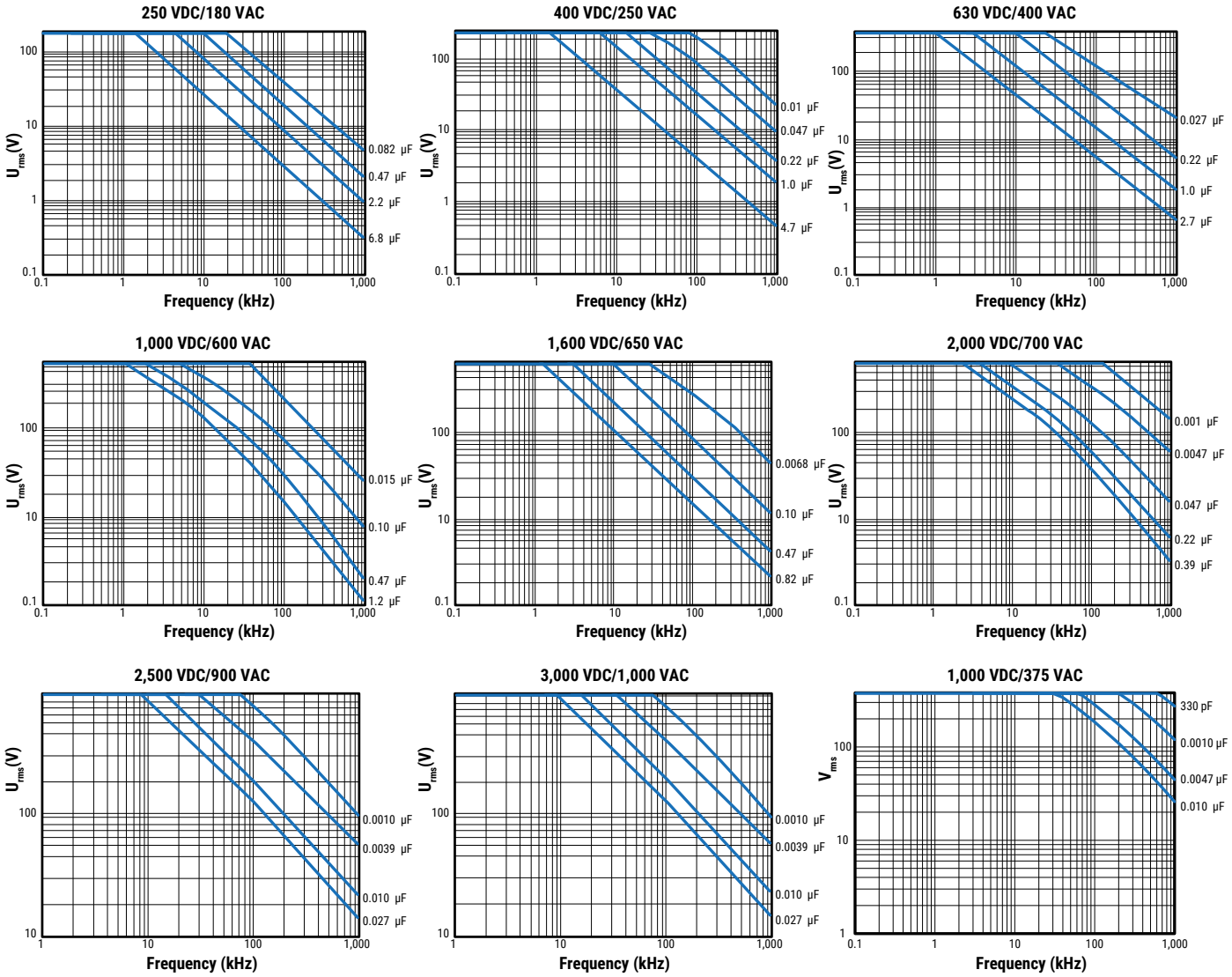

Environmental Test Data

Test	IEC Publication	Procedure	Requirements
Voltage Proof	60384–1 Clause 4.6	1.6 x V_R after 60 seconds	The capacitors must withstand the voltage without breakdowns or flashovers, and without decreased insulation resistance below the value in each detail specification. No visible damage.
	Clause 4.6 2.3	2 x V_R (minimum 400 VDC to case) after 60 seconds	As above
Vibration	60068–2–6 Test Fc	6 hours with 10 – 500 Hz and 0.75 mm amplitude or 98 m/s^2 depending on frequency	No visible damage tanδ ≤ 1.2 x stated value at 100 kHz Δ C/C ≤ ±0.5%
Bump	60068–2–29 Test Eb	4,000 bumps with 390 m/s^2 mounted on PCB	Δ C/C ≤ ±0.5% tanδ ≤ 1.2 x stated value at 100 kHz Insulation resistance: ≥ 100,000 MΩ for C_R ≤ 0.33 µF ≥ 30,000 MΩ, µF for C_R > 0.33 µF
Resistance to Soldering Heat	60068–2–20 Method 1A	Solder bath at +260°C ±5°C with screening	Immersion of the terminations into the solder bath shall be completed in a time not exceeding 1 second and the terminations shall remain immersed to the specified depth for 10 + 1 second and then be withdrawn. Δ C/C ≤ ±1.0% tanδ increase < 0.001 No visible damage
Climatic Sequence	60384–1 Paragraph 4:21	60068–2.2 dry heat 16 hours 60068–2–34 damp heat, one cycle 60068–2–1 Test Aa 2 hours	Insulation resistance: ≥ 100,000 MΩ for C_R ≤ 0.33 µF ≥ 30,000 MΩ, µF for C_R > 0.33 µF Δ C/C ≤ ±0.5% tanδ ≤ 1.2 x stated value at 100 kHz
Damp Heat Steady State	60068–2–3 Test Ca	+40°C and 90 – 95% RH	56 days no visible damage Insulation resistance: ≥ 50,000 MΩ for C_R ≤ 0.33 µF ≥ 15,000 MΩ, µF for C_R > 0.33 µF Δ C/C ≤ ±1% tanδ ≤ 1.2 x stated value at 100 kHz
Endurance, AC		1,000 hours at +85°C and 1.25 x V_R AC	No visible damage Δ C/C ≤ ±3% tanδ ≤ 1.5 x stated value at 100 kHz Insulation resistance: ≥ 100,000 MΩ for C_R ≤ 0.33 µF ≥ 30,000 MΩ, µF for C_R > 0.33 µF
Charge and Discharge	60384–17 Paragraph 4.13	10,000 pulses and with (2 x) dV/dt according to detail specification	tanδ (100 kHz) ≤ 2 x stated value (100 kHz) Δ C/C ≤ ±0.5% Insulation resistance: ≥ 50,000 MΩ for C_R ≤ 0.33 µF ≥ 15,000 MΩ, µF for C_R > 0.33 µF

Environmental Compliance

All KEMET pulse capacitors are RoHS Compliant.

RoHS

Table 1 – Ratings & Part Number Reference

VDC	VAC	Cap Value (µF)	Dimensions in mm			Lead Spacing (S)	dV/dt (V/µs)	Size Code (New/ Legacy)	R_{thha} °C/W 85°C 0.2m/s	Kemet Part Number	Legacy Part Number
			T	H	L						
250	180	0.00033	4.0	8.0	10.0	7.5	2,000	KG/K01	160	F450KG331J250(1)	PHE450HK3330J(1)
250	180	0.00039	4.0	8.0	10.0	7.5	2,000	KG/K01	160	F450KG391J250(1)	PHE450HK3390J(1)
250	180	0.00047	4.0	8.0	10.0	7.5	2,000	KG/K01	160	F450KG471J250(1)	PHE450HK3470J(1)
250	180	0.00056	4.0	8.0	10.0	7.5	2,000	KG/K01	160	F450KG561J250(1)	PHE450HK3560J(1)
250	180	0.00068	4.0	8.0	10.0	7.5	2,000	KG/K01	160	F450KG681J250(1)	PHE450HK3680J(1)
250	180	0.00082	4.0	8.0	10.0	7.5	2,000	KG/K01	160	F450KG821J250(1)	PHE450HK3820J(1)
250	180	0.0010	4.0	8.0	10.0	7.5	2,000	KG/K01	160	F450KG102J250(1)	PHE450HK4100J(1)
250	180	0.0012	4.0	8.0	10.0	7.5	2,000	KG/K01	160	F450KG122J250(1)	PHE450HK4120J(1)
250	180	0.0015	4.0	8.0	10.0	7.5	2,000	KG/K01	160	F450KG152J250(1)	PHE450HK4150J(1)
250	180	0.0018	4.0	8.0	10.0	7.5	2,000	KG/K01	160	F450KG182J250(1)	PHE450HK4180J(1)
250	180	0.0022	4.0	8.0	10.0	7.5	2,000	KG/K01	160	F450KG222J250(1)	PHE450HK4220J(1)
250	180	0.0027	4.0	8.0	10.0	7.5	2,000	KG/K01	160	F450KG272J250(1)	PHE450HK4270J(1)
250	180	0.0033	4.0	8.0	10.0	7.5	2,000	KG/K01	160	F450KG332J250(1)	PHE450HK4330J(1)
250	180	0.0039	4.0	8.0	10.0	7.5	2,000	KG/K01	160	F450KG392J250(1)	PHE450HK4390J(1)
250	180	0.0047	4.0	8.0	10.0	7.5	1,400	KG/K01	160	F450KG472J250(1)	PHE450HK4470J(1)
250	180	0.0056	4.0	8.0	10.0	7.5	1,400	KG/K01	160	F450KG562J250(1)	PHE450HK4560J(1)
250	180	0.0068	4.0	8.0	10.0	7.5	1,400	KG/K01	160	F450KG682J250(1)	PHE450HK4680J(1)
250	180	0.0082	4.0	8.0	10.0	7.5	1,400	KG/K01	160	F450KG822J250(1)	PHE450HK4820J(1)
250	180	0.010	4.0	8.0	10.0	7.5	1,200	KG/K01	160	F450KG103J250(1)	PHE450HK5100J(1)
250	180	0.012	4.0	8.0	10.0	7.5	1,200	KG/K01	160	F450KG123J250(1)	PHE450HK5120J(1)
250	180	0.015	4.0	8.0	10.0	7.5	800	KG/K01	160	F450KG153J250(1)	PHE450HK5150J(1)
250	180	0.018	4.0	8.0	10.0	7.5	800	KG/K01	160	F450KG183J250(1)	PHE450HK5180J(1)
250	180	0.022	4.0	8.0	10.0	7.5	800	KG/K01	160	F450KG223J250(1)	PHE450HK5220J(1)
250	180	0.027	5.0	11.0	10.0	7.5	800	KK/K03	160	F450KK273J250(1)	PHE450HK5270J(1)
250	180	0.033	5.0	11.0	10.0	7.5	800	KK/K03	160	F450KK333J250(1)	PHE450HK5330J(1)
250	180	0.039	5.0	11.0	10.0	7.5	800	KK/K03	160	F450KK393J250(1)	PHE450HK5390J(1)
250	180	0.047	5.0	11.0	10.0	7.5	800	KK/K03	160	F450KK473J250(1)	PHE450HK5470J(1)
250	180	0.056	5.0	11.0	10.0	7.5	800	KK/K03	160	F450KK563J250(1)	PHE450HK5560J(1)
250	180	0.068	6.0	12.0	10.5	7.5	800	KM/K04	160	F450KM683J250(1)	PHE450HK5680J(1)
250	180	0.0010	4.0	9.0	13.0	10	1,400	AG/A01	142	F450AG102J250(1)	PHE450HA4100J(1)
250	180	0.0012	4.0	9.0	13.0	10	1,400	AG/A01	142	F450AG122J250(1)	PHE450HA4120J(1)
250	180	0.0015	4.0	9.0	13.0	10	1,400	AG/A01	142	F450AG152J250(1)	PHE450HA4150J(1)
250	180	0.0018	4.0	9.0	13.0	10	1,400	AG/A01	142	F450AG182J250(1)	PHE450HA4180J(1)
250	180	0.0022	4.0	9.0	13.0	10	1,400	AG/A01	142	F450AG222J250(1)	PHE450HA4220J(1)
250	180	0.0027	4.0	9.0	13.0	10	1,400	AG/A01	142	F450AG272J250(1)	PHE450HA4270J(1)
250	180	0.0033	4.0	9.0	13.0	10	1,400	AG/A01	142	F450AG332J250(1)	PHE450HA4330J(1)
250	180	0.0039	4.0	9.0	13.0	10	1,400	AG/A01	142	F450AG392J250(1)	PHE450HA4390J(1)
250	180	0.0047	4.0	9.0	13.0	10	1,400	AG/A01	142	F450AG472J250(1)	PHE450HA4470J(1)
250	180	0.0056	4.0	9.0	13.0	10	1,400	AG/A01	142	F450AG562J250(1)	PHE450HA4560J(1)
250	180	0.0068	4.0	9.0	13.0	10	1,400	AG/A01	142	F450AG682J250(1)	PHE450HA4680J(1)
250	180	0.0082	4.0	9.0	13.0	10	1,200	AG/A01	142	F450AG822J250(1)	PHE450HA4820J(1)
250	180	0.010	4.0	9.0	13.0	10	1,200	AG/A01	142	F450AG103J250(1)	PHE450HA5100J(1)
250	180	0.012	4.0	9.0	13.0	10	1,200	AG/A01	142	F450AG123J250(1)	PHE450HA5120J(1)
250	180	0.015	4.0	9.0	13.0	10	1,200	AG/A01	142	F450AG153J250(1)	PHE450HA5150J(1)
250	180	0.018	4.0	9.0	13.0	10	1,100	AG/A01	142	F450AG183J250(1)	PHE450HA5180J(1)
250	180	0.022	4.0	9.0	13.0	10	1,100	AG/A01	142	F450AG223J250(1)	PHE450HA5220J(1)
250	180	0.027	4.0	9.0	13.0	10	1,100	AG/A01	142	F450AG273J250(1)	PHE450HA5270J(1)
250	180	0.033	4.0	9.0	13.0	10	700	AG/A01	142	F450AG333J250(1)	PHE450HA5330J(1)
250	180	0.039	4.0	9.0	13.0	10	700	AG/A01	142	F450AG393J250(1)	PHE450HA5390J(1)
250	180	0.047	4.0	9.0	13.0	10	700	AG/A01	142	F450AG473J250(1)	PHE450HA5470J(1)
250	180	0.056	4.5	10.5	13.0	10	700	AH/A02	122	F450AH563J250(1)	PHE450HA5560J(1)
250	180	0.068	4.5	10.5	13.0	10	700	AH/A02	122	F450AH683J250(1)	PHE450HA5680J(1)
250	180	0.082	5.0	11.0	13.0	10	700	AK/A03	116	F450AK823J250(1)	PHE450HA5820J(1)
250	180	0.10	6.0	12.0	13.0	10	700	AP/A04	105	F450AP104J250(1)	PHE450HA6100J(1)
250	180	0.12	6.0	12.0	13.0	10	700	AP/A04	105	F450AP124J250(1)	PHE450HA6120J(1)
250	180	0.047	5.5	10.5	18.0	15	1,000	BD/B04	100	F450BD473J250(1)	PHE450HB5470J(1)
250	180	0.056	5.5	10.5	18.0	15	1,000	BD/B04	100	F450BD563J250(1)	PHE450HB5560J(1)
250	180	0.068	5.5	10.5	18.0	15	1,000	BD/B04	100	F450BD683J250(1)	PHE450HB5680J(1)
250	180	0.082	5.5	10.5	18.0	15	600	BD/B04	101	F450BD823J250(1)	PHE450HB5820J(1)
VDC	**VAC**	**Cap Value (µF)**	**T (mm)**	**H (mm)**	**L (mm)**	**Lead Spacing (S)**	**dV/dt (V/ µs)**	**Size Code (New/ Legacy)**	**R_{thha} °C/W 85°C 0.2m/s**	**KEMET Part Number**	**Legacy Part Number**

(1) Insert lead and packaging code. See Ordering Options Table for available options.

Table 1 – Ratings & Part Number Reference cont.

VDC	VAC	Cap Value (µF)	Dimensions in mm			Lead Spacing (S)	dV/dt (V/µs)	Size Code (New/ Legacy)	R_{thha} °C/W 85°C 0.2m/s	Kemet Part Number	Legacy Part Number
			T	H	L						
250	180	0.10	5.5	10.5	18.0	15	600	BD/B04	100	F450BD104J250(1)	PHE450HB6100J(1)
250	180	0.12	5.5	10.5	18.0	15	600	BD/B04	99	F450BD124J250(1)	PHE450HB6120J(1)
250	180	0.15	5.5	12.5	18.0	15	600	BE/B05	85	F450BE154J250(1)	PHE450HB6150J(1)
250	180	0.18	6.5	12.5	18.0	15	600	BJ/B10	83	F450BJ184J250(1)	PHE450HB6180J(1)
250	180	0.22	7.5	14.5	18.0	15	600	BL/B06	74	F450BL224J250(1)	PHE450HB6220J(1)
250	180	0.27	7.5	14.5	18.0	15	600	BL/B06	73	F450BL274J250(1)	PHE450HB6270J(1)
250	180	0.33	8.0	15.0	18.0	15	600	BM/B12	67	F450BM334J250(1)	PHE450HB6330J(1)
250	180	0.39	8.5	16.0	18.0	15	600	BQ/B11	65	F450BQ394J250(1)	PHE450HB6390J(1)
250	180	0.47	9.5	17.5	18.0	15	600	BV/B14	60	F450BV474J250(1)	PHE450HB6470J(1)
250	180	0.18	6.5	14.5	26.0	22.5	600	DD/D13	58	F450DD184J250(1)	PHE450HD6180J(1)
250	180	0.22	6.5	14.5	26.0	22.5	400	DD/D13	60	F450DD224J250(1)	PHE450HD6220J(1)
250	180	0.27	6.5	14.5	26.0	22.5	400	DD/D13	59	F450DD274J250(1)	PHE450HD6270J(1)
250	180	0.33	6.5	14.5	26.0	22.5	400	DD/D13	58	F450DD334J250(1)	PHE450HD6330J(1)
250	180	0.39	7.0	16.5	26.0	22.5	400	DF/D17	54	F450DF394J250(1)	PHE450HD6390J(1)
250	180	0.47	7.0	16.5	26.0	22.5	400	DF/D17	53	F450DF474J250(1)	PHE450HD6470J(1)
250	180	0.56	9.0	18.5	26.0	22.5	400	DM/D15	49	F450DM564J250(1)	PHE450HD6560J(1)
250	180	0.68	9.0	18.5	26.0	22.5	400	DM/D15	47	F450DM684J250(1)	PHE450HD6680J(1)
250	180	0.82	10.5	19.0	26.0	22.5	400	DR/D18	43	F450DR824J250(1)	PHE450HD6820J(1)
250	180	1.0	11.0	21.5	26.0	22.5	400	DT/D16	40	F450DT105J250(1)	PHE450HD7100J(1)
250	180	1.2	13.5	23.0	26.0	22.5	400	DW/D20	38	F450DW125J250(1)	PHE450HD7120J(1)
250	180	1.5	13.5	23.0	26.0	22.5	400	DW/D20	36	F450DW155J250(1)	PHE450HD7150J(1)
250	180	1.8	15.5	24.5	26.0	22.5	400	DY/D19	36	F450DY185J250(1)	PHE450HD7180J(1)
250	180	0.82	10.5	20.5	31.5	27.5	300	FE/F11	38	F450FE824J250(1)	PHE450HF6820J(1)
250	180	1.0	10.5	20.5	31.5	27.5	300	FE/F11	38	F450FE105J250(1)	PHE450HF7100J(1)
250	180	1.2	10.5	20.5	31.5	27.5	300	FE/F11	37	F450FE125J250(1)	PHE450HF7120J(1)
250	180	1.2	21.0	12.5	31.5	27.5	300	FH/F17	37	F450FH125J250(1)	PHE450HT7120J(1)
250	180	1.5	11.5	22.5	31.5	27.5	300	FG/F12	34	F450FG155J250(1)	PHE450HF7150J(1)
250	180	1.8	13.5	23.0	31.5	27.5	300	FK/F03	32	F450FK185J250(1)	PHE450HF7180J(1)
250	180	2.2	14.5	24.5	31.5	27.5	300	FM/F13	31	F450FM225J250(1)	PHE450HF7220J(1)
250	180	2.2	27.5	16.0	31.5	27.5	300	FQ/F19	31	F450FQ225J250(1)	PHE450HT7220J(1)
250	180	2.7	17.5	28.0	31.5	27.5	300	FR/F14	27	F450FR275J250(1)	PHE450HF7270J(1)
250	180	3.3	19.0	29.0	31.5	27.5	300	FS/F15	25	F450FS335J250(1)	PHE450HF7330J(1)
250	180	3.9	21.0	30.0	31.5	27.5	300	FV/F16	23	F450FV395J250(1)	PHE450HF7390J(1)
250	180	3.9	31.0	19.0	31.5	27.5	300	FT/F18	23	F450FT395J250(1)	PHE450HT7390J(1)
250	180	1.8	13.0	24.0	41.0	37.5	200	RF/R05	28	F450RF185J250(1)	PHE450HR7180J(1)
250	180	2.2	13.0	24.0	41.0	37.5	200	RF/R05	28	F450RF225J250(1)	PHE450HR7220J(1)
250	180	2.7	13.0	24.0	41.0	37.5	200	RF/R05	27	F450RF275J250(1)	PHE450HR7270J(1)
250	180	3.3	15.0	26.0	41.0	37.5	200	RH/R04	25	F450RH335J250(1)	PHE450HR7330J(1)
250	180	3.9	16.5	32.0	41.0	37.5	200	RK/R02	22	F450RK395J250(1)	PHE450HR7390J(1)
250	180	4.7	16.5	32.0	41.0	37.5	200	RK/R02	22	F450RK475J250(1)	PHE450HR7470J(1)
250	180	5.6	19.0	36.0	41.0	37.5	200	RM/R03	18	F450RM565J250(1)	PHE450HR7560J(1)
250	180	6.8	21.0	38.0	41.0	37.5	200	RP/R06	17	F450RP685J250(1)	PHE450HR7680J(1)
250	180	8.2	28.0	43.0	41.0	37.5	200	RS/R08	17	F450RS825J250(1)	PHE450HR7820J(1)
250	180	10	28.0	43.0	41.0	37.5	200	RS/R08	17	F450RS106J250(1)	PHE450HR8100J(1)
400	250	0.00033	4.0	8.0	10.0	7.5	2,000	KG/K01	160	F450KG331J400(1)	PHE450KK3330J(1)
400	250	0.00039	4.0	8.0	10.0	7.5	2,000	KG/K01	160	F450KG391J400(1)	PHE450KK3390J(1)
400	250	0.00047	4.0	8.0	10.0	7.5	2,000	KG/K01	160	F450KG471J400(1)	PHE450KK3470J(1)
400	250	0.00056	4.0	8.0	10.0	7.5	2,000	KG/K01	160	F450KG561J400(1)	PHE450KK3560J(1)
400	250	0.00068	4.0	8.0	10.0	7.5	2,000	KG/K01	160	F450KG681J400(1)	PHE450KK3680J(1)
400	250	0.00082	4.0	8.0	10.0	7.5	2,000	KG/K01	160	F450KG821J400(1)	PHE450KK3820J(1)
400	250	0.0010	4.0	8.0	10.0	7.5	2,000	KG/K01	160	F450KG102J400(1)	PHE450KK4100J(1)
400	250	0.0012	4.0	8.0	10.0	7.5	2,000	KG/K01	160	F450KG122J400(1)	PHE450KK4120J(1)
400	250	0.0015	4.0	8.0	10.0	7.5	2,000	KG/K01	160	F450KG152J400(1)	PHE450KK4150J(1)
400	250	0.0018	4.0	8.0	10.0	7.5	2,000	KG/K01	160	F450KG182J400(1)	PHE450KK4180J(1)
400	250	0.0022	4.0	8.0	10.0	7.5	2,000	KG/K01	160	F450KG222J400(1)	PHE450KK4220J(1)
400	250	0.0027	4.0	8.0	10.0	7.5	2,000	KG/K01	160	F450KG272J400(1)	PHE450KK4270J(1)
400	250	0.0033	4.0	8.0	10.0	7.5	2,000	KG/K01	160	F450KG332J400(1)	PHE450KK4330J(1)
400	250	0.0039	4.0	8.0	10.0	7.5	2,000	KG/K01	160	F450KG392J400(1)	PHE450KK4390J(1)
400	250	0.0047	4.0	8.0	10.0	7.5	1,400	KG/K01	160	F450KG472J400(1)	PHE450KK4470J(1)
VDC	**VAC**	**Cap Value (µF)**	**T (mm)**	**H (mm)**	**L (mm)**	**Lead Spacing (S)**	**dV/dt (V/ µs)**	**Size Code (New/ Legacy)**	**R_{thha} °C/W 85°C 0.2m/s**	**KEMET Part Number**	**Legacy Part Number**

(1) Insert lead and packaging code. See Ordering Options Table for available options.

Table 1 – Ratings & Part Number Reference cont.

VDC	VAC	Cap Value (µF)	Dimensions in mm			Lead Spacing (S)	dV/dt (V/µs)	Size Code (New/ Legacy)	R_{thha} °C/W 85°C 0.2m/s	Kemet Part Number	Legacy Part Number
			T	H	L						
400	250	0.0056	4.0	8.0	10.0	7.5	1,400	KG/K01	160	F450KG562J400(1)	PHE450KK4560J(1)
400	250	0.0068	4.0	8.0	10.0	7.5	1,400	KG/K01	160	F450KG682J400(1)	PHE450KK4680J(1)
400	250	0.0082	4.0	8.0	10.0	7.5	1,400	KG/K01	160	F450KG822J400(1)	PHE450KK4820J(1)
400	250	0.010	4.0	8.0	10.0	7.5	1,200	KG/K01	160	F450KG103J400(1)	PHE450KK5100J(1)
400	250	0.012	4.0	8.0	10.0	7.5	1,200	KG/K01	160	F450KG123J400(1)	PHE450KK5120J(1)
400	250	0.015	5.0	11.0	10.0	7.5	1,200	KK/K03	160	F450KK153J400(1)	PHE450KK5150J(1)
400	250	0.018	5.0	11.0	10.0	7.5	1,200	KK/K03	160	F450KK183J400(1)	PHE450KK5180J(1)
400	250	0.022	5.0	11.0	10.0	7.5	1,200	KK/K03	160	F450KK223J400(1)	PHE450KK5220J(1)
400	250	0.027	5.0	11.0	10.0	7.5	1,200	KK/K03	160	F450KK273J400(1)	PHE450KK5270J(1)
400	250	0.033	5.0	11.0	10.0	7.5	1,200	KK/K03	160	F450KK333J400(1)	PHE450KK5330J(1)
400	250	0.039	6.0	12.0	10.5	7.5	1,200	KM/K04	160	F450KM393J400(1)	PHE450KK5390J(1)
400	250	0.047	6.0	12.0	10.5	7.5	1,200	KM/K04	160	F450KM473J400(1)	PHE450KK5470J(1)
400	250	0.0010	4.0	9.0	13.0	10	1,400	AG/A01	142	F450AG102J400(1)	PHE450KA4100J(1)
400	250	0.0012	4.0	9.0	13.0	10	1,400	AG/A01	142	F450AG122J400(1)	PHE450KA4120J(1)
400	250	0.0015	4.0	9.0	13.0	10	1,400	AG/A01	142	F450AG152J400(1)	PHE450KA4150J(1)
400	250	0.0018	4.0	9.0	13.0	10	1,400	AG/A01	142	F450AG182J400(1)	PHE450KA4180J(1)
400	250	0.0022	4.0	9.0	13.0	10	1,400	AG/A01	142	F450AG222J400(1)	PHE450KA4220J(1)
400	250	0.0027	4.0	9.0	13.0	10	1,400	AG/A01	142	F450AG272J400(1)	PHE450KA4270J(1)
400	250	0.0033	4.0	9.0	13.0	10	1,400	AG/A01	142	F450AG332J400(1)	PHE450KA4330J(1)
400	250	0.0039	4.0	9.0	13.0	10	1,400	AG/A01	142	F450AG392J400(1)	PHE450KA4390J(1)
400	250	0.0047	4.0	9.0	13.0	10	1,400	AG/A01	142	F450AG472J400(1)	PHE450KA4470J(1)
400	250	0.0056	4.0	9.0	13.0	10	1,400	AG/A01	142	F450AG562J400(1)	PHE450KA4560J(1)
400	250	0.0068	4.0	9.0	13.0	10	1,400	AG/A01	142	F450AG682J400(1)	PHE450KA4680J(1)
400	250	0.0082	4.0	9.0	13.0	10	1,200	AG/A01	142	F450AG822J400(1)	PHE450KA4820J(1)
400	250	0.010	4.0	9.0	13.0	10	1,200	AG/A01	142	F450AG103J400(1)	PHE450KA5100J(1)
400	250	0.012	4.0	9.0	13.0	10	1,200	AG/A01	142	F450AG123J400(1)	PHE450KA5120J(1)
400	250	0.015	4.0	9.0	13.0	10	1,200	AG/A01	142	F450AG153J400(1)	PHE450KA5150J(1)
400	250	0.018	4.0	9.0	13.0	10	1,100	AG/A01	142	F450AG183J400(1)	PHE450KA5180J(1)
400	250	0.022	4.0	9.0	13.0	10	1,100	AG/A01	142	F450AG223J400(1)	PHE450KA5220J(1)
400	250	0.027	4.0	9.0	13.0	10	1,100	AG/A01	142	F450AG273J400(1)	PHE450KA5270J(1)
400	250	0.033	4.5	10.5	13.0	10	1,100	AH/A02	122	F450AH333J400(1)	PHE450KA5330J(1)
400	250	0.039	5.0	11.0	13.0	10	1,100	AK/A03	116	F450AK393J400(1)	PHE450KA5390J(1)
400	250	0.047	6.0	12.0	13.0	10	1,100	AP/A04	105	F450AP473J400(1)	PHE450KA5470J(1)
400	250	0.056	6.0	12.0	13.0	10	1,100	AP/A04	105	F450AP563J400(1)	PHE450KA5560J(1)
400	250	0.033	5.5	10.5	18.0	15	2,500	BD/B04	100	F450BD333J400(1)	PHE450KB5330J(1)
400	250	0.039	5.5	10.5	18.0	15	1,000	BD/B04	100	F450BD393J400(1)	PHE450KB5390J(1)
400	250	0.047	5.5	10.5	18.0	15	1,000	BD/B04	100	F450BD473J400(1)	PHE450KB5470J(1)
400	250	0.056	5.5	10.5	18.0	15	1,000	BD/B04	100	F450BD563J400(1)	PHE450KB5560J(1)
400	250	0.068	5.5	10.5	18.0	15	1,000	BD/B04	100	F450BD683J400(1)	PHE450KB5680J(1)
400	250	0.082	5.5	12.5	18.0	15	1,000	BE/B05	99	F450BE823J400(1)	PHE450KB5820J(1)
400	250	0.10	6.5	12.5	18.0	15	1,000	BJ/B10	85	F450BJ104J400(1)	PHE450KB6100J(1)
400	250	0.12	7.5	14.5	18.0	15	1,000	BL/B06	75	F450BL124J400(1)	PHE450KB6120J(1)
400	250	0.15	7.5	14.5	18.0	15	1,000	BL/B06	75	F450BL154J400(1)	PHE450KB6150J(1)
400	250	0.18	8.0	15.0	18.0	15	1,000	BM/B12	71	F450BM184J400(1)	PHE450KB6180J(1)
400	250	0.22	9.5	17.5	18.0	15	1,000	BV/B14	60	F450BV224J400(1)	PHE450KB6220J(1)
400	250	0.27	9.5	17.5	18.0	15	1,000	BV/B14	59	F450BV274J400(1)	PHE450KB6270J(1)
400	250	0.12	6.5	14.5	26.0	22.5	600	DD/D13	58	F450DD124J400(1)	PHE450KD6120J(1)
400	250	0.15	6.5	14.5	26.0	22.5	600	DD/D13	58	F450DD154J400(1)	PHE450KD6150J(1)
400	250	0.18	6.5	14.5	26.0	22.5	600	DD/D13	58	F450DD184J400(1)	PHE450KD6180J(1)
400	250	0.22	7.0	16.5	26.0	22.5	600	DF/D17	52	F450DF224J400(1)	PHE450KD6220J(1)
400	250	0.27	7.0	16.5	26.0	22.5	600	DF/D17	52	F450DF274J400(1)	PHE450KD6270J(1)
400	250	0.33	9.0	18.5	26.0	22.5	600	DM/D15	48	F450DM334J400(1)	PHE450KD6330J(1)
400	250	0.39	9.0	18.5	26.0	22.5	600	DM/D15	48	F450DM394J400(1)	PHE450KD6390J(1)
400	250	0.47	10.5	19.0	26.0	22.5	600	DR/D18	45	F450DR474J400(1)	PHE450KD6470J(1)
400	250	0.56	11.0	21.5	26.0	22.5	600	DT/D16	40	F450DT564J400(1)	PHE450KD6560J(1)
400	250	0.68	13.5	23.0	26.0	22.5	600	DW/D20	35	F450DW684J400(1)	PHE450KD6680J(1)
400	250	0.82	13.5	23.0	26.0	22.5	600	DW/D20	35	F450DW824J400(1)	PHE450KD6820J(1)
400	250	1.0	15.5	24.5	26.0	22.5	600	DY/D19	33	F450DY105J400(1)	PHE450KD7100J(1)
400	250	0.47	10.5	20.5	31.5	27.5	500	FE/F11	38	F450FE474J400(1)	PHE450KF6470J(1)
VDC	**VAC**	**Cap Value (µF)**	**T (mm)**	**H (mm)**	**L (mm)**	**Lead Spacing (S)**	**dV/dt (V/ µs)**	**Size Code (New/ Legacy)**	**R_{thha} °C/W 85°C 0.2m/s**	**KEMET Part Number**	**Legacy Part Number**

(1) Insert lead and packaging code. See Ordering Options Table for available options.

Table 1 – Ratings & Part Number Reference cont.

VDC	VAC	Cap Value (µF)	Dimensions in mm			Lead Spacing (S)	dV/dt (V/µs)	Size Code (New/ Legacy)	R_{thha} °C/W 85°C 0.2m/s	Kemet Part Number	Legacy Part Number
			T	H	L						
400	250	0.56	10.5	20.5	31.5	27.5	500	FE/F11	38	F450FE564J400(1)	PHE450KF6560J(1)
400	250	0.68	10.5	20.5	31.5	27.5	500	FE/F11	38	F450FE684J400(1)	PHE450KF6680J(1)
400	250	0.68	21.0	12.5	31.5	27.5	500	FH/F17	38	F450FH684J400(1)	PHE450KT6680J(1)
400	250	0.82	11.5	22.5	31.5	27.5	500	FG/F12	34	F450FG824J400(1)	PHE450KF6820J(1)
400	250	1.0	13.5	23.0	31.5	27.5	500	FK/F03	32	F450FK105J400(1)	PHE450KF7100J(1)
400	250	1.2	14.5	24.5	31.5	27.5	500	FM/F13	30	F450FM125J400(1)	PHE450KF7120J(1)
400	250	1.5	17.5	28.0	31.5	27.5	500	FR/F14	27	F450FR155J400(1)	PHE450KF7150J(1)
400	250	1.5	27.5	16.0	31.5	27.5	500	FQ/F19	27	F450FQ155J400(1)	PHE450KT7150J(1)
400	250	1.8	19.0	29.0	31.5	27.5	500	FS/F15	25	F450FS185J400(1)	PHE450KF7180J(1)
400	250	2.2	21.0	30.0	31.5	27.5	500	FV/F16	24	F450FV225J400(1)	PHE450KF7220J(1)
400	250	2.2	31.0	19.0	31.5	27.5	500	FT/F18	24	F450FT225J400(1)	PHE450KT7220J(1)
400	250	1.0	13.0	24.0	41.0	37.5	300	RF/R05	27	F450RF105J400(1)	PHE450KR7100J(1)
400	250	1.2	13.0	24.0	41.0	37.5	300	RF/R05	27	F450RF125J400(1)	PHE450KR7120J(1)
400	250	1.5	13.0	24.0	41.0	37.5	300	RF/R05	27	F450RF155J400(1)	PHE450KR7150J(1)
400	250	1.8	15.0	26.0	41.0	37.5	300	RH/R04	25	F450RH185J400(1)	PHE450KR7180J(1)
400	250	2.2	16.5	32.0	41.0	37.5	300	RK/R02	22	F450RK225J400(1)	PHE450KR7220J(1)
400	250	2.7	16.5	32.0	41.0	37.5	300	RK/R02	22	F450RK275J400(1)	PHE450KR7270J(1)
400	250	3.3	19.0	36.0	41.0	37.5	300	RM/R03	19	F450RM335J400(1)	PHE450KR7330J(1)
400	250	3.9	19.0	36.0	41.0	37.5	300	RM/R03	19	F450RM395J400(1)	PHE450KR7390J(1)
400	250	4.7	21.0	38.0	41.0	37.5	300	RP/R06	17	F450RP475J400(1)	PHE450KR7470J(1)
400	250	5.6	28.0	43.0	41.0	37.5	300	RS/R08	17	F450RS565J400(1)	PHE450KR7560J(1)
630	300	0.00039	4.0	8.0	10.0	7.5	2,000	KG/K01	160	F450KG391J630(1)	PHE450MK3390J(1)
630	300	0.00047	4.0	8.0	10.0	7.5	2,000	KG/K01	160	F450KG471J630(1)	PHE450MK3470J(1)
630	300	0.00056	4.0	8.0	10.0	7.5	2,000	KG/K01	160	F450KG561J630(1)	PHE450MK3560J(1)
630	300	0.00068	4.0	8.0	10.0	7.5	2,000	KG/K01	160	F450KG681J630(1)	PHE450MK3680J(1)
630	300	0.00082	4.0	8.0	10.0	7.5	2,000	KG/K01	160	F450KG821J630(1)	PHE450MK3820J(1)
630	300	0.0010	4.0	8.0	10.0	7.5	2,000	KG/K01	160	F450KG102J630(1)	PHE450MK4100J(1)
630	300	0.0012	4.0	8.0	10.0	7.5	2,000	KG/K01	160	F450KG122J630(1)	PHE450MK4120J(1)
630	300	0.0015	4.0	8.0	10.0	7.5	2,000	KG/K01	160	F450KG152J630(1)	PHE450MK4150J(1)
630	300	0.0018	4.0	8.0	10.0	7.5	2,000	KG/K01	160	F450KG182J630(1)	PHE450MK4180J(1)
630	300	0.0022	4.0	8.0	10.0	7.5	2,000	KG/K01	160	F450KG222J630(1)	PHE450MK4220J(1)
630	300	0.0027	4.0	8.0	10.0	7.5	2,000	KG/K01	160	F450KG272J630(1)	PHE450MK4270J(1)
630	300	0.0033	4.0	8.0	10.0	7.5	2,000	KG/K01	160	F450KG332J630(1)	PHE450MK4330J(1)
630	300	0.0039	4.0	8.0	10.0	7.5	2,000	KG/K01	160	F450KG392J630(1)	PHE450MK4390J(1)
630	300	0.0047	4.0	8.0	10.0	7.5	1,400	KG/K01	160	F450KG472J630(1)	PHE450MK4470J(1)
630	300	0.0056	4.0	8.0	10.0	7.5	1,400	KG/K01	160	F450KG562J630(1)	PHE450MK4560J(1)
630	300	0.0068	4.0	8.0	10.0	7.5	1,400	KG/K01	160	F450KG682J630(1)	PHE450MK4680J(1)
630	300	0.0082	4.0	8.0	10.0	7.5	1,400	KG/K01	160	F450KG822J630(1)	PHE450MK4820J(1)
630	300	0.010	5.0	11.0	10.0	7.5	1,400	KK/K03	160	F450KK103J630(1)	PHE450MK5100J(1)
630	300	0.012	5.0	11.0	10.0	7.5	1,400	KK/K03	160	F450KK123J630(1)	PHE450MK5120J(1)
630	300	0.015	5.0	11.0	10.0	7.5	1,400	KK/K03	160	F450KK153J630(1)	PHE450MK5150J(1)
630	300	0.018	5.0	11.0	10.0	7.5	1,400	KK/K03	160	F450KK183J630(1)	PHE450MK5180J(1)
630	300	0.022	6.0	12.0	10.5	7.5	1,400	KM/K04	160	F450KM223J630(1)	PHE450MK5220J(1)
630	300	0.0010	4.0	9.0	13.0	10	1,400	AG/A01	142	F450AG102J630(1)	PHE450MA4100J(1)
630	300	0.0012	4.0	9.0	13.0	10	1,400	AG/A01	142	F450AG122J630(1)	PHE450MA4120J(1)
630	300	0.0015	4.0	9.0	13.0	10	1,400	AG/A01	142	F450AG152J630(1)	PHE450MA4150J(1)
630	300	0.0018	4.0	9.0	13.0	10	1,400	AG/A01	142	F450AG182J630(1)	PHE450MA4180J(1)
630	300	0.0022	4.0	9.0	13.0	10	1,400	AG/A01	142	F450AG222J630(1)	PHE450MA4220J(1)
630	300	0.0027	4.0	9.0	13.0	10	1,400	AG/A01	142	F450AG272J630(1)	PHE450MA4270J(1)
630	300	0.0033	4.0	9.0	13.0	10	1,400	AG/A01	142	F450AG332J630(1)	PHE450MA4330J(1)
630	300	0.0039	4.0	9.0	13.0	10	1,400	AG/A01	142	F450AG392J630(1)	PHE450MA4390J(1)
630	300	0.0047	4.0	9.0	13.0	10	1,400	AG/A01	142	F450AG472J630(1)	PHE450MA4470J(1)
630	300	0.0056	4.0	9.0	13.0	10	1,400	AG/A01	142	F450AG562J630(1)	PHE450MA4560J(1)
630	300	0.0068	4.0	9.0	13.0	10	1,400	AG/A01	142	F450AG682J630(1)	PHE450MA4680J(1)
630	300	0.0082	4.0	9.0	13.0	10	1,200	AG/A01	142	F450AG822J630(1)	PHE450MA4820J(1)
630	300	0.010	4.0	9.0	13.0	10	1,200	AG/A01	142	F450AG103J630(1)	PHE450MA5100J(1)
630	300	0.012	4.0	9.0	13.0	10	1,200	AG/A01	142	F450AG123J630(1)	PHE450MA5120J(1)
630	300	0.015	4.0	9.0	13.0	10	1,200	AG/A01	142	F450AG153J630(1)	PHE450MA5150J(1)
630	300	0.018	4.5	10.5	13.0	10	1,200	AH/A02	122	F450AH183J630(1)	PHE450MA5180J(1)
VDC	VAC	Cap Value (µF)	T (mm)	H (mm)	L (mm)	Lead Spacing (S)	dV/dt (V/ µs)	Size Code (New/ Legacy)	R_{thha} °C/W 85°C 0.2m/s	KEMET Part Number	Legacy Part Number

(1) Insert lead and packaging code. See Ordering Options Table for available options.

Table 1 – Ratings & Part Number Reference cont.

VDC	VAC	Cap Value (µF)	Dimensions in mm			Lead Spacing (S)	dV/dt (V/µs)	Size Code (New/ Legacy)	R_{thha} °C/W 85°C 0.2m/s	Kemet Part Number	Legacy Part Number
			T	H	L						
630	300	0.022	4.5	10.5	13.0	10	1,200	AH/A02	122	F450AH223J630(1)	PHE450MA5220J(1)
630	300	0.027	5.0	11.0	13.0	10	1,200	AK/A03	116	F450AK273J630(1)	PHE450MA5270J(1)
630	300	0.033	6.0	12.0	13.0	10	1,200	AP/A04	105	F450AP333J630(1)	PHE450MA5330J(1)
630	300	0.039	6.0	12.0	13.0	10	1,200	AP/A04	105	F450AP393J630(1)	PHE450MA5390J(1)
630	400	0.010	5.5	10.5	18.0	15	2,500	BD/B04	99	F450BD103J630(1)	PHE450MB5100J(1)
630	400	0.012	5.5	10.5	18.0	15	2,500	BD/B04	99	F450BD123J630(1)	PHE450MB5120J(1)
630	400	0.015	5.5	10.5	18.0	15	2,500	BD/B04	100	F450BD153J630(1)	PHE450MB5150J(1)
630	400	0.018	5.5	10.5	18.0	15	2,500	BD/B04	100	F450BD183J630(1)	PHE450MB5180J(1)
630	400	0.022	5.5	10.5	18.0	15	2,500	BD/B04	100	F450BD223J630(1)	PHE450MB5220J(1)
630	400	0.027	5.5	10.5	18.0	15	2,500	BD/B04	100	F450BD273J630(1)	PHE450MB5270J(1)
630	400	0.033	5.5	10.5	18.0	15	2,500	BD/B04	100	F450BD333J630(1)	PHE450MB5330J(1)
630	400	0.039	5.5	12.5	18.0	15	2,500	BE/B05	90	F450BE393J630(1)	PHE450MB5390J(1)
630	400	0.047	6.5	12.5	18.0	15	2,500	BJ/B10	85	F450BJ473J630(1)	PHE450MB5470J(1)
630	400	0.056	6.5	12.5	18.0	15	2,500	BJ/B10	85	F450BJ563J630(1)	PHE450MB5560J(1)
630	400	0.068	7.5	14.5	18.0	15	2,500	BL/B06	75	F450BL683J630(1)	PHE450MB5680J(1)
630	400	0.082	8.0	15.0	18.0	15	2,500	BM/B12	72	F450BM823J630(1)	PHE450MB5820J(1)
630	400	0.10	8.5	16.0	18.0	15	2,500	BQ/B11	70	F450BQ104J630(1)	PHE450MB6100J(1)
630	400	0.12	9.5	17.5	18.0	15	2,500	BV/B14	61	F450BV124J630(1)	PHE450MB6120J(1)
630	400	0.15	9.5	17.5	18.0	15	2,500	BV/B14	61	F450BV154J630(1)	PHE450MB6150J(1)
630	400	0.033	6.5	14.5	26.0	22.5	1,800	DD/D13	58	F450DD333J630(1)	PHE450MD5330J(1)
630	400	0.039	6.5	14.5	26.0	22.5	1,800	DD/D13	58	F450DD393J630(1)	PHE450MD5390J(1)
630	400	0.047	6.5	14.5	26.0	22.5	1,800	DD/D13	58	F450DD473J630(1)	PHE450MD5470J(1)
630	400	0.056	6.5	14.5	26.0	22.5	1,800	DD/D13	58	F450DD563J630(1)	PHE450MD5560J(1)
630	400	0.068	6.5	14.5	26.0	22.5	1,800	DD/D13	59	F450DD683J630(1)	PHE450MD5680J(1)
630	400	0.082	6.5	14.5	26.0	22.5	1,800	DD/D13	59	F450DD823J630(1)	PHE450MD5820J(1)
630	400	0.10	6.5	14.5	26.0	22.5	1,800	DD/D13	59	F450DD104J630(1)	PHE450MD6100J(1)
630	400	0.12	7.0	16.5	26.0	22.5	1,800	DF/D17	55	F450DF124J630(1)	PHE450MD6120J(1)
630	400	0.15	7.0	16.5	26.0	22.5	1,800	DF/D17	55	F450DF154J630(1)	PHE450MD6150J(1)
630	400	0.18	9.0	18.5	26.0	22.5	1,800	DM/D15	50	F450DM184J630(1)	PHE450MD6180J(1)
630	400	0.22	9.0	18.5	26.0	22.5	1,800	DM/D15	50	F450DM224J630(1)	PHE450MD6220J(1)
630	400	0.27	11.0	21.5	26.0	22.5	1,800	DT/D16	45	F450DT274J630(1)	PHE450MD6270J(1)
630	400	0.33	11.0	21.5	26.0	22.5	1,800	DT/D16	45	F450DT334J630(1)	PHE450MD6330J(1)
630	400	0.39	13.5	23.0	26.0	22.5	1,800	DW/D20	40	F450DW394J630(1)	PHE450MD6390J(1)
630	400	0.47	13.5	23.0	26.0	22.5	1,800	DW/D20	40	F450DW474J630(1)	PHE450MD6470J(1)
630	400	0.56	15.5	24.5	26.0	22.5	1,800	DY/D19	34	F450DY564J630(1)	PHE450MD6560J(1)
630	400	0.22	10.5	20.5	31.5	27.5	1,100	FE/F11	38	F450FE224J630(1)	PHE450MF6220J(1)
630	400	0.27	10.5	20.5	31.5	27.5	1,100	FE/F11	38	F450FE274J630(1)	PHE450MF6270J(1)
630	400	0.33	10.5	20.5	31.5	27.5	1,100	FE/F11	38	F450FE334J630(1)	PHE450MF6330J(1)
630	400	0.39	10.5	20.5	31.5	27.5	1,100	FE/F11	38	F450FE394J630(1)	PHE450MF6390J(1)
630	400	0.39	21.0	12.5	31.5	27.5	1,100	FH/F17	38	F450FH394J630(1)	PHE450MT6390J(1)
630	400	0.47	11.5	22.5	31.5	27.5	1,100	FG/F12	35	F450FG474J630(1)	PHE450MF6470J(1)
630	400	0.56	13.5	23.0	31.5	27.5	1,100	FK/F03	34	F450FK564J630(1)	PHE450MF6560J(1)
630	400	0.56	27.5	16.0	31.5	27.5	1100	FQ/F19	34	F450FQ564J630(1)	PHE450MT6560J(1)
630	400	0.68	14.5	24.5	31.5	27.5	1,100	FM/F13	33	F450FM684J630(1)	PHE450MF6680J(1)
630	400	0.82	17.5	28.0	31.5	27.5	1,100	FR/F14	30	F450FR824J630(1)	PHE450MF6820J(1)
630	400	0.82	27.5	16.0	31.5	27.5	1,100	FQ/F19	30	F450FQ824J630(1)	PHE450MT6820J(1)
630	400	1.0	17.5	28.0	31.5	27.5	1,100	FR/F14	30	F450FR105J630(1)	PHE450MF7100J(1)
630	400	1.2	21.0	30.0	31.5	27.5	1,100	FV/F16	25	F450FV125J630(1)	PHE450MF7120J(1)
630	400	1.2	31.0	19.0	31.5	27.5	1,100	FT/F18	25	F450FT125J630(1)	PHE450MT7120J(1)
630	400	0.56	13.0	24.0	41.0	37.5	700	RF/R05	29	F450RF564J630(1)	PHE450MR6560J(1)
630	400	0.68	13.0	24.0	41.0	37.5	700	RF/R05	28	F450RF684J630(1)	PHE450MR6680J(1)
630	400	0.82	13.0	24.0	41.0	37.5	700	RF/R05	28	F450RF824J630(1)	PHE450MR6820J(1)
630	400	1.0	15.0	26.0	41.0	37.5	700	RH/R04	27	F450RH105J630(1)	PHE450MR7100J(1)
630	400	1.2	15.0	26.0	41.0	37.5	700	RH/R04	27	F450RH125J630(1)	PHE450MR7120J(1)
630	400	1.5	16.5	32.0	41.0	37.5	700	RK/R02	24	F450RK155J630(1)	PHE450MR7150J(1)
630	400	1.8	19.0	36.0	41.0	37.5	700	RM/R03	20	F450RM185J630(1)	PHE450MR7180J(1)
630	400	2.2	19.0	36.0	41.0	37.5	700	RM/R03	20	F450RM225J630(1)	PHE450MR7220J(1)
630	400	2.7	21.0	38.0	41.0	37.5	700	RP/R06	18	F450RP275J630(1)	PHE450MR7270J(1)
630	400	3.3	28.0	43.0	41.0	37.5	700	RS/R08	18	F450RS335J630(1)	PHE450MR7330J(1)
VDC	**VAC**	**Cap Value (µF)**	**T (mm)**	**H (mm)**	**L (mm)**	**Lead Spacing (S)**	**dV/dt (V/ µs)**	**Size Code (New/ Legacy)**	**R_{thha} °C/W 85°C 0.2m/s**	**KEMET Part Number**	**Legacy Part Number**

(1) Insert lead and packaging code. See Ordering Options Table for available options.

Table 1 – Ratings & Part Number Reference cont.

VDC	VAC	Cap Value (µF)	Dimensions in mm			Lead Spacing (S)	dV/dt (V/µs)	Size Code (New/ Legacy)	R_{thha} °C/W 85°C 0.2m/s	Kemet Part Number	Legacy Part Number
			T	H	L						
1000	375	0.00033	4.0	8.0	10.0	7.5	2,000	KG/K01	160	F450KG331J1K0(1)	PHE450PK3330J(1)
1000	375	0.00039	4.0	8.0	10.0	7.5	2,000	KG/K01	160	F450KG391J1K0(1)	PHE450PK3390J(1)
1000	375	0.00047	4.0	8.0	10.0	7.5	2,000	KG/K01	160	F450KG471J1K0(1)	PHE450PK3470J(1)
1000	375	0.00056	4.0	8.0	10.0	7.5	2,000	KG/K01	160	F450KG561J1K0(1)	PHE450PK3560J(1)
1000	375	0.00068	4.0	8.0	10.0	7.5	2,000	KG/K01	160	F450KG681J1K0(1)	PHE450PK3680J(1)
1000	375	0.00082	4.0	8.0	10.0	7.5	2,000	KG/K01	160	F450KG821J1K0(1)	PHE450PK3820J(1)
1000	375	0.0010	4.0	8.0	10.0	7.5	2,000	KG/K01	160	F450KG102J1K0(1)	PHE450PK4100J(1)
1000	375	0.0012	4.0	8.0	10.0	7.5	2,000	KG/K01	160	F450KG122J1K0(1)	PHE450PK4120J(1)
1000	375	0.0015	4.0	8.0	10.0	7.5	2,000	KG/K01	160	F450KG152J1K0(1)	PHE450PK4150J(1)
1000	375	0.0018	4.0	8.0	10.0	7.5	2,000	KG/K01	160	F450KG182J1K0(1)	PHE450PK4180J(1)
1000	375	0.0022	4.0	8.0	10.0	7.5	2,000	KG/K01	160	F450KG222J1K0(1)	PHE450PK4220J(1)
1000	375	0.0027	4.0	8.0	10.0	7.5	2,000	KG/K01	160	F450KG272J1K0(1)	PHE450PK4270J(1)
1000	375	0.0033	4.0	8.0	10.0	7.5	2,000	KG/K01	160	F450KG332J1K0(1)	PHE450PK4330J(1)
1000	375	0.0039	4.0	8.0	10.0	7.5	2,000	KG/K01	160	F450KG392J1K0(1)	PHE450PK4390J(1)
1000	375	0.0047	5.0	11.0	10.0	7.5	2,000	KK/K03	160	F450KK472J1K0(1)	PHE450PK4470J(1)
1000	375	0.0056	5.0	11.0	10.0	7.5	2,000	KK/K03	160	F450KK562J1K0(1)	PHE450PK4560J(1)
1000	375	0.0068	5.0	11.0	10.0	7.5	2,000	KK/K03	160	F450KK682J1K0(1)	PHE450PK4680J(1)
1000	375	0.0082	5.0	11.0	10.0	7.5	2,000	KK/K03	160	F450KK822J1K0(1)	PHE450PK4820J(1)
1000	375	0.010	6.0	12.0	10.5	7.5	2,000	KM/K04	160	F450KM103J1K0(1)	PHE450PK5100J(1)
1000	375	0.012	6.0	12.0	10.5	7.5	2,000	KM/K04	160	F450KM123J1K0(1)	PHE450PK5120J(1)
1000	375	0.0010	4.0	9.0	13.0	10	1,400	AG/A01	142	F450AG102J1K0(1)	PHE450PA4100J(1)
1000	375	0.0012	4.0	9.0	13.0	10	1,400	AG/A01	142	F450AG122J1K0(1)	PHE450PA4120J(1)
1000	375	0.0015	4.0	9.0	13.0	10	1,400	AG/A01	142	F450AG152J1K0(1)	PHE450PA4150J(1)
1000	375	0.0018	4.0	9.0	13.0	10	1,400	AG/A01	142	F450AG182J1K0(1)	PHE450PA4180J(1)
1000	375	0.0022	4.0	9.0	13.0	10	1,400	AG/A01	142	F450AG222J1K0(1)	PHE450PA4220J(1)
1000	375	0.0027	4.0	9.0	13.0	10	1,400	AG/A01	142	F450AG272J1K0(1)	PHE450PA4270J(1)
1000	375	0.0033	4.0	9.0	13.0	10	1,400	AG/A01	142	F450AG332J1K0(1)	PHE450PA4330J(1)
1000	375	0.0039	4.0	9.0	13.0	10	1,400	AG/A01	142	F450AG392J1K0(1)	PHE450PA4390J(1)
1000	375	0.0047	4.0	9.0	13.0	10	1,400	AG/A01	142	F450AG472J1K0(1)	PHE450PA4470J(1)
1000	375	0.0056	4.0	9.0	13.0	10	1,400	AG/A01	142	F450AG562J1K0(1)	PHE450PA4560J(1)
1000	375	0.0068	4.0	9.0	13.0	10	1,400	AG/A01	142	F450AG682J1K0(1)	PHE450PA4680J(1)
1000	375	0.0082	4.5	10.5	13.0	10	1,400	AH/A02	122	F450AH822J1K0(1)	PHE450PA4820J(1)
1000	375	0.010	4.5	10.5	13.0	10	1,400	AH/A02	122	F450AH103J1K0(1)	PHE450PA5100J(1)
1000	375	0.012	5.0	11.0	13.0	10	1,400	AK/A03	116	F450AK123J1K0(1)	PHE450PA5120J(1)
1000	375	0.015	6.0	12.0	13.0	10	1,400	AP/A04	105	F450AP153J1K0(1)	PHE450PA5150J(1)
1000	375	0.018	6.0	12.0	13.0	10	1,400	AP/A04	105	F450AP183J1K0(1)	PHE450PA5180J(1)
1000	600	0.0039	5.5	10.5	18.0	15	2,500	BD/B04	98	F450BD392J1K0(1)	PHE450PB4390J(1)
1000	600	0.0047	5.5	10.5	18.0	15	2,500	BD/B04	98	F450BD472J1K0(1)	PHE450PB4470J(1)
1000	600	0.0056	5.5	10.5	18.0	15	2,500	BD/B04	98	F450BD562J1K0(1)	PHE450PB4560J(1)
1000	600	0.0068	5.5	10.5	18.0	15	2,500	BD/B04	99	F450BD682J1K0(1)	PHE450PB4680J(1)
1000	600	0.0082	5.5	10.5	18.0	15	2,500	BD/B04	99	F450BD822J1K0(1)	PHE450PB4820J(1)
1000	600	0.010	5.5	10.5	18.0	15	2,500	BD/B04	99	F450BD103J1K0(1)	PHE450PB5100J(1)
1000	600	0.012	5.5	10.5	18.0	15	2,500	BD/B04	99	F450BD123J1K0(1)	PHE450PB5120J(1)
1000	600	0.015	5.5	10.5	18.0	15	2,500	BD/B04	99	F450BD153J1K0(1)	PHE450PB5150J(1)
1000	600	0.018	5.5	10.5	18.0	15	2,500	BD/B04	98	F450BD183J1K0(1)	PHE450PB5180JB04(1)
1000	600	0.022	5.5	10.5	18.0	15	2,500	BD/B04	98	F450BD223J1K0(1)	PHE450PB5220JB04(1)
1000	600	0.027	5.5	12.5	18.0	15	2,500	BE/B05	90	F450BE273J1K0(1)	PHE450PB5270JB05(1)
1000	600	0.033	6.5	12.5	18.0	15	2,500	BJ/B10	87	F450BJ333J1K0(1)	PHE450PB5330JB10(1)
1000	600	0.039	7.5	14.5	18.0	15	2,500	BL/B06	78	F450BL393J1K0(1)	PHE450PB5390J(1)
1000	600	0.047	7.5	14.5	18.0	15	2,500	BL/B06	78	F450BL473J1K0(1)	PHE450PB5470JB06(1)
1000	600	0.056	8.0	15.0	18.0	15	2,500	BM/B12	75	F450BM563J1K0(1)	PHE450PB5560JB12(1)
1000	600	0.068	8.5	16.0	18.0	15	2,500	BQ/B11	70	F450BQ683J1K0(1)	PHE450PB5680JB11(1)
1000	600	0.082	9.5	17.5	18.0	15	2,500	BV/B14	60	F450BV823J1K0(1)	PHE450PB5820JB14(1)
1000	600	0.10	11.0	19.0	18.0	15	2,500	BY/B16	55	F450BY104J1K0(1)	PHE450PB6100JB16(1)
1000	600	0.12	11.0	19.0	18.0	15	2,500	BY/B16	55	F450BY124J1K0(1)	PHE450PB6120JB16(1)
1000	600	0.022	6.5	14.5	26.0	22.5	1,800	DD/D13	58	F450DD223J1K0(1)	PHE450PD5220J(1)
1000	600	0.027	6.5	14.5	26.0	22.5	1,800	DD/D13	58	F450DD273J1K0(1)	PHE450PD5270J(1)
1000	600	0.033	6.5	14.5	26.0	22.5	1,800	DD/D13	58	F450DD333J1K0(1)	PHE450PD5330J(1)
1000	600	0.039	6.5	14.5	26.0	22.5	1,800	DD/D13	58	F450DD393J1K0(1)	PHE450PD5390J(1)
VDC	**VAC**	**Cap Value (µF)**	**T (mm)**	**H (mm)**	**L (mm)**	**Lead Spacing (S)**	**dV/dt (V/ µs)**	**Size Code (New/ Legacy)**	**R_{thha} °C/W 85°C 0.2m/s**	**KEMET Part Number**	**Legacy Part Number**

(1) Insert lead and packaging code. See Ordering Options Table for available options.

Table 1 – Ratings & Part Number Reference cont.

VDC	VAC	Cap Value (µF)	Dimensions in mm			Lead Spacing (S)	dV/dt (V/µs)	Size Code (New/ Legacy)	R_{thha} °C/W 85°C 0.2m/s	Kemet Part Number	Legacy Part Number
			T	H	L						
1000	600	0.047	6.5	14.5	26.0	22.5	1,800	DD/D13	58	F450DD473J1K0(1)	PHE450PD5470J(1)
1000	600	0.056	6.5	14.5	26.0	22.5	1,800	DD/D13	58	F450DD563J1K0(1)	PHE450PD5560J(1)
1000	600	0.068	6.5	14.5	26.0	22.5	1,800	DD/D13	55	F450DD683J1K0(1)	PHE450PD5680JD13(1)
1000	600	0.082	6.5	14.5	26.0	22.5	1,800	DD/D13	54	F450DD823J1K0(1)	PHE450PD5820JD13(1)
1000	600	0.10	7.0	16.5	26.0	22.5	1,800	DF/D17	52	F450DF104J1K0(1)	PHE450PD6100JD17(1)
1000	600	0.12	8.0	16.0	26.0	22.5	1,800	DH/D14	52	F450DH124J1K0(1)	PHE450PD6120JD14(1)
1000	600	0.15	9.0	18.5	26.0	22.5	1,800	DM/D15	49	F450DM154J1K0(1)	PHE450PD6150JD15(1)
1000	600	0.18	10.5	19.0	26.0	22.5	1,800	DR/D18	46	F450DR184J1K0(1)	PHE450PD6180JD18(1)
1000	600	0.22	11.0	21.5	26.0	22.5	1,800	DT/D16	44	F450DT224J1K0(1)	PHE450PD6220JD16(1)
1000	600	0.27	13.5	23.0	26.0	22.5	1,800	DW/D20	40	F450DW274J1K0(1)	PHE450PD6270JD20(1)
1000	600	0.33	13.5	23.0	26.0	22.5	1,800	DW/D20	40	F450DW334J1K0(1)	PHE450PD6330JD20(1)
1000	600	0.39	15.5	24.5	26.0	22.5	1,800	DY/D19	35	F450DY394J1K0(1)	PHE450PD6390JD19(1)
1000	600	0.15	10.5	20.5	31.5	27.5	1,300	FE/F11	38	F450FE154J1K0(1)	PHE450PF6150J(1)
1000	600	0.18	10.5	20.5	31.5	27.5	1,300	FE/F11	38	F450FE184J1K0(1)	PHE450PF6180J(1)
1000	600	0.22	10.5	20.5	31.5	27.5	1,300	FE/F11	36	F450FE224J1K0(1)	PHE450PF6220J(1)
1000	600	0.22	21.0	12.5	31.5	27.5	1,300	FH/F17	36	F450FH224J1K0(1)	PHE450PT6220JF17(1)
1000	600	0.27	10.5	20.5	31.5	27.5	1,300	FE/F11	36	F450FE274J1K0(1)	PHE450PF6270JF11(1)
1000	600	0.33	11.5	22.5	31.5	27.5	1,300	FG/F12	35	F450FG334J1K0(1)	PHE450PF6330JF12(1)
1000	600	0.39	13.5	23.0	31.5	27.5	1,300	FK/F03	34	F450FK394J1K0(1)	PHE450PF6390JF03(1)
1000	600	0.47	14.5	24.5	31.5	27.5	1,300	FM/F13	34	F450FM474J1K0(1)	PHE450PF6470JF13(1)
1000	600	0.47	27.5	16.0	31.5	27.5	1,300	FQ/F19	30	F450FQ474J1K0(1)	PHE450PT6470J(1)
1000	600	0.56	17.5	28.0	31.5	27.5	1,300	FR/F14	28	F450FR564J1K0(1)	PHE450PF6560JF14(1)
1000	600	0.68	17.5	28.0	31.5	27.5	1,300	FR/F14	28	F450FR684J1K0(1)	PHE450PF6680JF14(1)
1000	600	0.68	31.0	19.0	31.5	27.5	1,300	FT/F18	25	F450FT684J1K0(1)	PHE450PT6680J(1)
1000	600	0.82	19.0	29.0	31.5	27.5	1,300	FS/F15	25	F450FS824J1K0(1)	PHE450PF6820JF15(1)
1000	600	1.0	21.0	30.0	31.5	27.5	1,300	FV/F16	25	F450FV105J1K0(1)	PHE450PF7100JF16(1)
1000	600	0.33	13.0	24.0	41.0	37.5	800	RF/R05	28	F450RF334J1K0(1)	PHE450PR6330J(1)
1000	600	0.39	13.0	24.0	41.0	37.5	800	RF/R05	28	F450RF394J1K0(1)	PHE450PR6390J(1)
1000	600	0.47	13.0	24.0	41.0	37.5	800	RF/R05	28	F450RF474J1K0(1)	PHE450PR6470J(1)
1000	600	0.56	13.0	24.0	41.0	37.5	800	RF/R05	27	F450RF564J1K0(1)	PHE450PR6560JR05(1)
1000	600	0.68	15.0	26.0	41.0	37.5	800	RH/R04	25	F450RH684J1K0(1)	PHE450PR6680JR04(1)
1000	600	0.82	16.5	32.0	41.0	37.5	800	RK/R02	25	F450RK824J1K0(1)	PHE450PR6820J(1)
1000	600	1.0	16.5	32.0	41.0	37.5	800	RK/R02	20	F450RK105J1K0(1)	PHE450PR7100JR02(1)
1000	600	1.2	19.0	36.0	41.0	37.5	800	RM/R03	19	F450RM125J1K0(1)	PHE450PR7120J(1)
1000	600	1.5	19.0	36.0	41.0	37.5	800	RM/R03	19	F450RM155J1K0(1)	PHE450PR7150JR03(1)
1000	600	1.8	21.0	38.0	41.0	37.5	800	RP/R06	19	F450RP185J1K0(1)	PHE450PR7180JR06(1)
1000	600	2.2	28.0	43.0	41.0	37.5	800	RS/R08	19	F450RS225J1K0(1)	PHE450PR7220JR08(1)
1600	650	0.0027	5.5	10.5	18.0	15	2,500	BD/B04	98	F450BD272J1K6(1)	PHE450RB4270J(1)
1600	650	0.0033	5.5	10.5	18.0	15	2,500	BD/B04	98	F450BD332J1K6(1)	PHE450RB4330J(1)
1600	650	0.0039	5.5	10.5	18.0	15	2,500	BD/B04	98	F450BD392J1K6(1)	PHE450RB4390J(1)
1600	650	0.0047	5.5	10.5	18.0	15	2,500	BD/B04	98	F450BD472J1K6(1)	PHE450RB4470J(1)
1600	650	0.0056	5.5	10.5	18.0	15	2,500	BD/B04	98	F450BD562J1K6(1)	PHE450RB4560J(1)
1600	650	0.0068	5.5	10.5	18.0	15	2,500	BD/B04	99	F450BD682J1K6(1)	PHE450RB4680J(1)
1600	650	0.0082	5.5	10.5	18.0	15	2,500	BD/B04	99	F450BD822J1K6(1)	PHE450RB4820J(1)
1600	650	0.010	5.5	10.5	18.0	15	2,500	BD/B04	99	F450BD103J1K6(1)	PHE450RB5100J(1)
1600	650	0.012	5.5	10.5	18.0	15	2,500	BD/B04	99	F450BD123J1K6(1)	PHE450RB5120J(1)
1600	650	0.015	5.5	12.5	18.0	15	2,500	BE/B05	90	F450BE153J1K6(1)	PHE450RB5150J(1)
1600	650	0.018	6.5	12.5	18.0	15	2,500	BJ/B10	88	F450BJ183J1K6(1)	PHE450RB5180J(1)
1600	650	0.022	6.5	12.5	18.0	15	2,500	BJ/B10	89	F450BJ223J1K6(1)	PHE450RB5220J(1)
1600	650	0.027	7.5	14.5	18.0	15	2,500	BL/B06	80	F450BL273J1K6(1)	PHE450RB5270J(1)
1600	650	0.033	8.0	15.0	18.0	15	2,500	BM/B12	75	F450BM333J1K6(1)	PHE450RB5330J(1)
1600	650	0.039	8.5	16.0	18.0	15	2,500	BQ/B11	73	F450BQ393J1K6(1)	PHE450RB5390J(1)
1600	650	0.047	9.5	17.5	18.0	15	2,500	BV/B14	60	F450BV473J1K6(1)	PHE450RB5470J(1)
1600	650	0.056	9.5	17.5	18.0	15	2,500	BV/B14	60	F450BV563J1K6(1)	PHE450RB5560J(1)
1600	650	0.010	6.5	14.5	26.0	22.5	1,800	DD/D13	60	F450DD103J1K6(1)	PHE450RD5100J(1)
1600	650	0.012	6.5	14.5	26.0	22.5	1,800	DD/D13	60	F450DD123J1K6(1)	PHE450RD5120J(1)
1600	650	0.015	6.5	14.5	26.0	22.5	1,800	DD/D13	60	F450DD153J1K6(1)	PHE450RD5150J(1)
1600	650	0.018	6.5	14.5	26.0	22.5	1,800	DD/D13	58	F450DD183J1K6(1)	PHE450RD5180J(1)
1600	650	0.022	6.5	14.5	26.0	22.5	1,800	DD/D13	58	F450DD223J1K6(1)	PHE450RD5220J(1)
VDC	**VAC**	**Cap Value (µF)**	**T (mm)**	**H (mm)**	**L (mm)**	**Lead Spacing (S)**	**dV/dt (V/ µs)**	**Size Code (New/ Legacy)**	**R_{thha} °C/W 85°C 0.2m/s**	**KEMET Part Number**	**Legacy Part Number**

(1) Insert lead and packaging code. See Ordering Options Table for available options.

Table 1 – Ratings & Part Number Reference cont.

VDC	VAC	Cap Value (µF)	Dimensions in mm			Lead Spacing (S)	dV/dt (V/µs)	Size Code (New/ Legacy)	R_{thha} °C/W 85°C 0.2m/s	Kemet Part Number	Legacy Part Number
			T	H	L						
1600	650	0.027	6.5	14.5	26.0	22.5	1,800	DD/D13	58	F450DD273J1K6(1)	PHE450RD5270J(1)
1600	650	0.033	6.5	14.5	26.0	22.5	1,800	DD/D13	58	F450DD333J1K6(1)	PHE450RD5330J(1)
1600	650	0.039	6.5	14.5	26.0	22.5	1,800	DD/D13	58	F450DD393J1K6(1)	PHE450RD5390J(1)
1600	650	0.047	7.0	16.5	26.0	22.5	1,800	DF/D17	55	F450DF473J1K6(1)	PHE450RD5470J(1)
1600	650	0.056	7.0	16.5	26.0	22.5	1,800	DF/D17	55	F450DF563J1K6(1)	PHE450RD5560J(1)
1600	650	0.068	9.0	18.5	26.0	22.5	1,800	DM/D15	50	F450DM683J1K6(1)	PHE450RD5680J(1)
1600	650	0.082	9.0	18.5	26.0	22.5	1,800	DM/D15	50	F450DM823J1K6(1)	PHE450RD5820J(1)
1600	650	0.10	10.5	19.0	26.0	22.5	1,800	DR/D18	48	F450DR104J1K6(1)	PHE450RD6100J(1)
1600	650	0.12	11.0	21.5	26.0	22.5	1,800	DT/D16	45	F450DT124J1K6(1)	PHE450RD6120J(1)
1600	650	0.15	13.5	23.0	26.0	22.5	1,800	DW/D20	40	F450DW154J1K6(1)	PHE450RD6150J(1)
1600	650	0.18	13.5	23.0	26.0	22.5	1,800	DW/D20	40	F450DW184J1K6(1)	PHE450RD6180J(1)
1600	650	0.22	15.5	24.5	26.0	22.5	1,800	DY/D19	34	F450DY224J1K6(1)	PHE450RD6220J(1)
1600	650	0.082	10.5	20.5	31.5	27.5	1,300	FE/F11	37	F450FE823J1K6(1)	PHE450RF5820J(1)
1600	650	0.10	10.5	20.5	31.5	27.5	1,300	FE/F11	37	F450FE104J1K6(1)	PHE450RF6100J(1)
1600	650	0.10	21.0	12.5	31.5	27.5	1,300	FH/F17	37	F450FH104J1K6(1)	PHE450RT6100J(1)
1600	650	0.12	10.5	20.5	31.5	27.5	1,300	FE/F11	37	F450FE124J1K6(1)	PHE450RF6120J(1)
1600	650	0.15	11.5	22.5	31.5	27.5	1,300	FG/F12	36	F450FG154J1K6(1)	PHE450RF6150J(1)
1600	650	0.18	13.5	23.0	31.5	27.5	1,300	FK/F03	35	F450FK184J1K6(1)	PHE450RF6180J(1)
1600	650	0.22	14.5	24.5	31.5	27.5	1,300	FM/F13	35	F450FM224J1K6(1)	PHE450RF6220J(1)
1600	650	0.22	27.5	16.0	31.5	27.5	1,300	FQ/F19	35	F450FQ224J1K6(1)	PHE450RT6220J(1)
1600	650	0.27	17.5	28.0	31.5	27.5	1,300	FR/F14	32	F450FR274J1K6(1)	PHE450RF6270J(1)
1600	650	0.33	19.0	29.0	31.5	27.5	1,300	FS/F15	28	F450FS334J1K6(1)	PHE450RF6330J(1)
1600	650	0.33	31.0	19.0	31.5	27.5	1,300	FT/F18	28	F450FT334J1K6(1)	PHE450RT6330J(1)
1600	650	0.39	21.0	30.0	31.5	27.5	1,300	FV/F16	25	F450FV394J1K6(1)	PHE450RF6390J(1)
1600	650	0.18	13.0	24.0	41.0	37.5	800	RF/R05	27	F450RF184J1K6(1)	PHE450RR6180J(1)
1600	650	0.22	13.0	24.0	41.0	37.5	800	RF/R05	27	F450RF224J1K6(1)	PHE450RR6220J(1)
1600	650	0.27	13.0	24.0	41.0	37.5	800	RF/R05	27	F450RF274J1K6(1)	PHE450RR6270J(1)
1600	650	0.33	15.0	26.0	41.0	37.5	800	RH/R04	26	F450RH334J1K6(1)	PHE450RR6330J(1)
1600	650	0.39	16.5	32.0	41.0	37.5	800	RK/R02	24	F450RK394J1K6(1)	PHE450RR6390J(1)
1600	650	0.47	16.5	32.0	41.0	37.5	800	RK/R02	24	F450RK474J1K6(1)	PHE450RR6470J(1)
1600	650	0.56	16.5	32.0	41.0	37.5	800	RK/R02	20	F450RK564J1K6(1)	PHE450RR6560J(1)
1600	650	0.68	19.0	36.0	41.0	37.5	800	RM/R03	20	F450RM684J1K6(1)	PHE450RR6680J(1)
1600	650	0.82	21.0	38.0	41.0	37.5	800	RP/R06	18	F450RP824J1K6(1)	PHE450RR6820J(1)
1600	650	1.0	28.0	43.0	41.0	37.5	800	RS/R08	18	F450RS105J1K6(1)	PHE450RR7100JR08(1)
2000	700	0.0010	5.5	10.5	18.0	15	2,500	BD/B04	98	F450BD102J2K0(1)	PHE450SB4100J(1)
2000	700	0.0012	5.5	10.5	18.0	15	2,500	BD/B04	98	F450BD122J2K0(1)	PHE450SB4120J(1)
2000	700	0.0015	5.5	10.5	18.0	15	2,500	BD/B04	98	F450BD152J2K0(1)	PHE450SB4150J(1)
2000	700	0.0018	5.5	10.5	18.0	15	2,500	BD/B04	98	F450BD182J2K0(1)	PHE450SB4180J(1)
2000	700	0.0022	5.5	10.5	18.0	15	2,500	BD/B04	98	F450BD222J2K0(1)	PHE450SB4220J(1)
2000	700	0.0027	5.5	10.5	18.0	15	2,500	BD/B04	98	F450BD272J2K0(1)	PHE450SB4270J(1)
2000	700	0.0033	5.5	10.5	18.0	15	2,500	BD/B04	98	F450BD332J2K0(1)	PHE450SB4330J(1)
2000	700	0.0039	5.5	10.5	18.0	15	2,500	BD/B04	98	F450BD392J2K0(1)	PHE450SB4390J(1)
2000	700	0.0047	5.5	10.5	18.0	15	2,500	BD/B04	98	F450BD472J2K0(1)	PHE450SB4470J(1)
2000	700	0.0056	5.5	10.5	18.0	15	2,500	BD/B04	98	F450BD562J2K0(1)	PHE450SB4560J(1)
2000	700	0.0068	5.5	10.5	18.0	15	2,500	BD/B04	98	F450BD682J2K0(1)	PHE450SB4680J(1)
2000	700	0.0082	5.5	12.5	18.0	15	2,500	BE/B05	92	F450BE822J2K0(1)	PHE450SB4820J(1)
2000	700	0.010	6.5	12.5	18.0	15	2,500	BJ/B10	90	F450BJ103J2K0(1)	PHE450SB5100J(1)
2000	700	0.012	7.5	14.5	18.0	15	2,500	BL/B06	80	F450BL123J2K0(1)	PHE450SB5120J(1)
2000	700	0.015	7.5	14.5	18.0	15	2,500	BL/B06	80	F450BL153J2K0(1)	PHE450SB5150J(1)
2000	700	0.018	8.0	15.0	18.0	15	2,500	BM/B12	75	F450BM183J2K0(1)	PHE450SB5180J(1)
2000	700	0.022	8.5	16.0	18.0	15	2,500	BQ/B11	70	F450BQ223J2K0(1)	PHE450SB5220J(1)
2000	700	0.027	9.5	17.5	18.0	15	2,500	BV/B14	61	F450BV273J2K0(1)	PHE450SB5270J(1)
2000	700	0.0033	6.5	14.5	26.0	22.5	1,800	DD/D13	60	F450DD332J2K0(1)	PHE450SD4330J(1)
2000	700	0.0039	6.5	14.5	26.0	22.5	1,800	DD/D13	60	F450DD392J2K0(1)	PHE450SD4390J(1)
2000	700	0.0047	6.5	14.5	26.0	22.5	1,800	DD/D13	60	F450DD472J2K0(1)	PHE450SD4470J(1)
2000	700	0.0056	6.5	14.5	26.0	22.5	1,800	DD/D13	60	F450DD562J2K0(1)	PHE450SD4560J(1)
2000	700	0.0068	6.5	14.5	26.0	22.5	1,800	DD/D13	60	F450DD682J2K0(1)	PHE450SD4680J(1)
2000	700	0.0082	6.5	14.5	26.0	22.5	1,800	DD/D13	60	F450DD822J2K0(1)	PHE450SD4820J(1)
2000	700	0.010	6.5	14.5	26.0	22.5	1,800	DD/D13	60	F450DD103J2K0(1)	PHE450SD5100J(1)
VDC	**VAC**	**Cap Value (µF)**	**T (mm)**	**H (mm)**	**L (mm)**	**Lead Spacing (S)**	**dV/dt (V/ µs)**	**Size Code (New/ Legacy)**	**R_{thha} °C/W 85°C 0.2m/s**	**KEMET Part Number**	**Legacy Part Number**

(1) Insert lead and packaging code. See Ordering Options Table for available options.

Table 1 – Ratings & Part Number Reference cont.

VDC	VAC	Cap Value (µF)	Dimensions in mm			Lead Spacing (S)	dV/dt (V/µs)	Size Code (New/ Legacy)	R_{thha} °C/W 85°C 0.2m/s	Kemet Part Number	Legacy Part Number
			T	H	L						
2000	700	0.012	6.5	14.5	26.0	22.5	1,800	DD/D13	60	F450DD123J2K0(1)	PHE450SD5120J(1)
2000	700	0.015	6.5	14.5	26.0	22.5	1,800	DD/D13	60	F450DD153J2K0(1)	PHE450SD5150J(1)
2000	700	0.018	6.5	14.5	26.0	22.5	1,800	DD/D13	58	F450DD183J2K0(1)	PHE450SD5180J(1)
2000	700	0.022	6.5	14.5	26.0	22.5	1,800	DD/D13	58	F450DD223J2K0(1)	PHE450SD5220J(1)
2000	700	0.027	7.0	16.5	26.0	22.5	1,800	DF/D17	55	F450DF273J2K0(1)	PHE450SD5270J(1)
2000	700	0.033	7.0	16.5	26.0	22.5	1,800	DF/D17	55	F450DF333J2K0(1)	PHE450SD5330J(1)
2000	700	0.039	8.0	16.0	26.0	22.5	1,800	DH/D14	53	F450DH393J2K0(1)	PHE450SD5390J(1)
2000	700	0.047	9.0	18.5	26.0	22.5	1,800	DM/D15	52	F450DM473J2K0(1)	PHE450SD5470J(1)
2000	700	0.056	10.5	19.0	26.0	22.5	1,800	DR/D18	50	F450DR563J2K0(1)	PHE450SD5560J(1)
2000	700	0.068	11.0	21.5	26.0	22.5	1,800	DT/D16	45	F450DT683J2K0(1)	PHE450SD5680J(1)
2000	700	0.082	11.0	21.5	26.0	22.5	1,800	DT/D16	45	F450DT823J2K0(1)	PHE450SD5820J(1)
2000	700	0.10	13.5	23.0	26.0	22.5	1,800	DW/D20	40	F450DW104J2K0(1)	PHE450SD6100J(1)
2000	700	0.12	15.5	24.5	26.0	22.5	1,800	DY/D19	35	F450DY124J2K0(1)	PHE450SD6120J(1)
2000	700	0.047	10.5	20.5	31.5	27.5	1,300	FE/F11	37	F450FE473J2K0(1)	PHE450SF5470J(1)
2000	700	0.056	10.5	20.5	31.5	27.5	1,300	FE/F11	37	F450FE563J2K0(1)	PHE450SF5560J(1)
2000	700	0.056	21.0	12.5	31.5	27.5	1,300	FH/F17	37	F450FH563J2K0(1)	PHE450ST5560J(1)
2000	700	0.068	10.5	20.5	31.5	27.5	1,300	FE/F11	36	F450FE683J2K0(1)	PHE450SF5680J(1)
2000	700	0.082	10.5	20.5	31.5	27.5	1,300	FE/F11	35	F450FE823J2K0(1)	PHE450SF5820J(1)
2000	700	0.10	11.5	22.5	31.5	27.5	1,300	FG/F12	34	F450FG104J2K0(1)	PHE450SF6100JF12(1)
2000	700	0.12	13.5	23.0	31.5	27.5	1,300	FK/F03	32	F450FK124J2K0(1)	PHE450SF6120JF03(1)
2000	700	0.12	27.5	16.0	31.5	27.5	1,300	FQ/F19	32	F450FQ124J2K0(1)	PHE450ST6120J(1)
2000	700	0.15	14.5	24.5	31.5	27.5	1,300	FM/F13	30	F450FM154J2K0(1)	PHE450SF6150JF13(1)
2000	700	0.18	17.5	28.0	31.5	27.5	1,300	FR/F14	28	F450FR184J2K0(1)	PHE450SF6180JF14(1)
2000	700	0.18	31.0	19.0	31.5	27.5	1,300	FT/F18	28	F450FT184J2K0(1)	PHE450ST6180J(1)
2000	700	0.22	19.0	29.0	31.5	27.5	1,300	FS/F15	26	F450FS224J2K0(1)	PHE450SF6220JF15(1)
2000	700	0.27	21.0	30.0	31.5	27.5	1,300	FV/F16	25	F450FV274J2K0(1)	PHE450SF6270JF16(1)
2000	700	0.10	13.0	24.0	41.0	37.5	800	RF/R05	27	F450RF104J2K0(1)	PHE450SR6100J(1)
2000	700	0.12	13.0	24.0	41.0	37.5	800	RF/R05	27	F450RF124J2K0(1)	PHE450SR6120J(1)
2000	700	0.15	13.0	24.0	41.0	37.5	800	RF/R05	26	F450RF154J2K0(1)	PHE450SR6150JR05(1)
2000	700	0.18	13.0	24.0	41.0	37.5	800	RF/R05	26	F450RF184J2K0(1)	PHE450SR6180JR05(1)
2000	700	0.22	15.0	26.0	41.0	37.5	800	RH/R04	24	F450RH224J2K0(1)	PHE450SR6220JR04(1)
2000	700	0.27	16.5	32.0	41.0	37.5	800	RK/R02	22	F450RK274J2K0(1)	PHE450SR6270JR02(1)
2000	700	0.33	16.5	32.0	41.0	37.5	800	RK/R02	22	F450RK334J2K0(1)	PHE450SR6330JR02(1)
2000	700	0.39	19.0	36.0	41.0	37.5	800	RM/R03	18	F450RM394J2K0(1)	PHE450SR6390JR03(1)
2000	700	0.47	19.0	36.0	41.0	37.5	800	RM/R03	18	F450RM474J2K0(1)	PHE450SR6470JR03(1)
2000	700	0.56	21.0	38.0	41.0	37.5	800	RP/R06	18	F450RP564J2K0(1)	PHE450SR6560JR06(1)
2000	700	0.68	28.0	43.0	41.0	37.5	800	RS/R08	18	F450RS684J2K0(1)	PHE450SR6680JR08(1)
2500	900	0.0010	5.5	10.5	18.0	15	2,500	BD/B04	98	F450BD102J2K5(1)	PHE450TB4100J(1)
2500	900	0.0012	5.5	10.5	18.0	15	2,500	BD/B04	98	F450BD122J2K5(1)	PHE450TB4120J(1)
2500	900	0.0015	5.5	10.5	18.0	15	2,500	BD/B04	98	F450BD152J2K5(1)	PHE450TB4150J(1)
2500	900	0.0018	5.5	10.5	18.0	15	2,500	BD/B04	98	F450BD182J2K5(1)	PHE450TB4180J(1)
2500	900	0.0022	5.5	12.5	18.0	15	2,500	BE/B05	92	F450BE222J2K5(1)	PHE450TB4220J(1)
2500	900	0.0027	6.5	12.5	18.0	15	2,500	BJ/B10	90	F450BJ272J2K5(1)	PHE450TB4270J(1)
2500	900	0.0033	7.5	14.5	18.0	15	2,500	BL/B06	80	F450BL332J2K5(1)	PHE450TB4330J(1)
2500	900	0.0039	7.5	14.5	18.0	15	2,500	BL/B06	80	F450BL392J2K5(1)	PHE450TB4390J(1)
2500	900	0.0047	8.0	15.0	18.0	15	2,500	BM/B12	75	F450BM472J2K5(1)	PHE450TB4470J(1)
2500	900	0.0056	8.5	16.0	18.0	15	2,500	BQ/B11	70	F450BQ562J2K5(1)	PHE450TB4560J(1)
2500	900	0.0068	9.5	17.5	18.0	15	2,500	BV/B14	60	F450BV682J2K5(1)	PHE450TB4680JB14(1)
2500	900	0.0082	9.5	17.5	18.0	15	2,500	BV/B14	60	F450BV822J2K5(1)	PHE450TB4820J(1)
2500	900	0.010	11.0	19.0	18.0	15	2,500	BY/B16	55	F450BY103J2K5(1)	PHE450TB5100JB16(1)
2500	900	0.0047	6.5	14.5	26.0	22.5	1,800	DD/D13	60	F450DD472J2K5(1)	PHE450TD4470J(1)
2500	900	0.0056	6.5	14.5	26.0	22.5	1,800	DD/D13	60	F450DD562J2K5(1)	PHE450TD4560J(1)
2500	900	0.0068	6.5	14.5	26.0	22.5	1,800	DD/D13	60	F450DD682J2K5(1)	PHE450TD4680J(1)
2500	900	0.0082	6.5	14.5	26.0	22.5	1,800	DD/D13	55	F450DD822J2K5(1)	PHE450TD4820JD13(1)
2500	900	0.010	7.0	16.5	26.0	22.5	1,800	DF/D17	53	F450DF103J2K5(1)	PHE450TD5100JD17(1)
2500	900	0.012	8.0	16.0	26.0	22.5	1,800	DH/D14	52	F450DH123J2K5(1)	PHE450TD5120JD14(1)
2500	900	0.015	9.0	18.5	26.0	22.5	1,800	DM/D15	52	F450DM153J2K5(1)	PHE450TD5150J(1)
2500	900	0.018	9.0	18.5	26.0	22.5	1,800	DM/D15	50	F450DM183J2K5(1)	PHE450TD5180JD15(1)
2500	900	0.022	10.5	19.0	26.0	22.5	1,800	DR/D18	48	F450DR223J2K5(1)	PHE450TD5220JD18(1)
VDC	VAC	Cap Value (µF)	T (mm)	H (mm)	L (mm)	Lead Spacing (S)	dV/dt (V/ µs)	Size Code (New/ Legacy)	R_{thha} °C/W 85°C 0.2m/s	KEMET Part Number	Legacy Part Number

(1) Insert lead and packaging code. See Ordering Options Table for available options.

Table 1 – Ratings & Part Number Reference cont.

VDC	VAC	Cap Value (µF)	Dimensions in mm			Lead Spacing (S)	dV/dt (V/µs)	Size Code (New/ Legacy)	R_{thha} °C/W 85°C 0.2m/s	Kemet Part Number	Legacy Part Number
			T	H	L						
2500	900	0.027	11.0	21.5	26.0	22.5	1,800	DT/D16	45	F450DT273J2K5(1)	PHE450TD5270JD16(1)
2500	900	0.033	13.5	23.0	26.0	22.5	1,800	DW/D20	38	F450DW333J2K5(1)	PHE450TD5330JD20(1)
2500	900	0.039	13.5	23.0	26.0	22.5	1,800	DW/D20	38	F450DW393J2K5(1)	PHE450TD5390JD20(1)
2500	900	0.047	15.5	24.5	26.0	22.5	1,800	DY/D19	35	F450DY473J2K5(1)	PHE450TD5470JD19(1)
2500	900	0.027	10.5	20.5	31.5	27.5	1,300	FE/F11	38	F450FE273J2K5(1)	PHE450TF5270JF11(1)
2500	900	0.033	10.5	20.5	31.5	27.5	1,300	FE/F11	38	F450FE333J2K5(1)	PHE450TF5330JF11(1)
2500	900	0.039	11.5	22.5	31.5	27.5	1,300	FG/F12	36	F450FG393J2K5(1)	PHE450TF5390JF12(1)
2500	900	0.047	13.5	23.0	31.5	27.5	1,300	FK/F03	35	F450FK473J2K5(1)	PHE450TF5470JF03(1)
2500	900	0.056	13.5	23.0	31.5	27.5	1,300	FK/F03	35	F450FK563J2K5(1)	PHE450TF5560JF03(1)
2500	900	0.068	14.5	24.5	31.5	27.5	1,300	FM/F13	34	F450FM683J2K5(1)	PHE450TF5680JF13(1)
2500	900	0.027	17.5	28.0	31.5	27.5	1,300	FR/F14	30	F450FR273J2K5(1)	PHE450TF5270JF14(1)
2500	900	0.10	19.0	29.0	31.5	27.5	1,300	FS/F15	28	F450FS104J2K5(1)	PHE450TF6100JF15(1)
2500	900	0.12	21.0	30.0	31.5	27.5	1,300	FV/F16	25	F450FV124J2K5(1)	PHE450TF6120JF16(1)
2500	900	0.068	13.0	24.0	41.0	37.5	800	RF/R05	28	F450RF683J2K5(1)	PHE450TR5680JR05(1)
2500	900	0.082	13.0	24.0	41.0	37.5	800	RF/R05	28	F450RF823J2K5(1)	PHE450TR5820JR05(1)
2500	900	0.10	15.0	26.0	41.0	37.5	800	RH/R04	27	F450RH104J2K5(1)	PHE450TR6100JR04(1)
2500	900	0.12	15.0	26.0	41.0	37.5	800	RH/R04	27	F450RH124J2K5(1)	PHE450TR6120JR04(1)
2500	900	0.15	16.5	32.0	41.0	37.5	800	RK/R02	25	F450RK154J2K5(1)	PHE450TR6150JR02(1)
2500	900	0.18	19.0	36.0	41.0	37.5	800	RM/R03	20	F450RM184J2K5(1)	PHE450TR6180JR03(1)
2500	900	0.22	19.0	36.0	41.0	37.5	800	RM/R03	20	F450RM224J2K5(1)	PHE450TR6220JR03(1)
2500	900	0.22	21.0	38.0	41.0	37.5	800	RP/R06	19	F450RP224J2K5(1)	PHE450TR6220J(1)
2500	900	0.27	21.0	38.0	41.0	37.5	800	RP/R06	19	F450RP274J2K5(1)	PHE450TR6270JR06(1)
2500	900	0.33	28.0	43.0	41.0	37.5	800	RS/R08	19	F450RS334J2K5(1)	PHE450TR6330JR08(1)
3000	1000	0.0010	5.5	10.5	18.0	15	2,500	BD/B04	98	F450BD102J3K0(1)	PHE450XB4100JB04(1)
3000	1000	0.0012	5.5	10.5	18.0	15	2,500	BD/B04	98	F450BD122J3K0(1)	PHE450XB4120JB04(1)
3000	1000	0.0015	5.5	12.5	18.0	15	2,500	BE/B05	92	F450BE152J3K0(1)	PHE450XB4150JB05(1)
3000	1000	0.0018	5.5	12.5	18.0	15	2,500	BE/B05	90	F450BE182J3K0(1)	PHE450XB4180JB05(1)
3000	1000	0.0022	6.5	12.5	18.0	15	2,500	BJ/B10	87	F450BJ222J3K0(1)	PHE450XB4220JB10(1)
3000	1000	0.0027	7.5	14.5	18.0	15	2,500	BL/B06	80	F450BL272J3K0(1)	PHE450XB4270JB06(1)
3000	1000	0.0033	8.0	15.0	18.0	15	2,500	BM/B12	75	F450BM332J3K0(1)	PHE450XB4330JB12(1)
3000	1000	0.0039	8.5	16.0	18.0	15	2,500	BQ/B11	70	F450BQ392J3K0(1)	PHE450XB4390JB11(1)
3000	1000	0.0047	9.5	17.5	18.0	15	2,500	BV/B14	61	F450BV472J3K0(1)	PHE450XB4470JB14(1)
3000	1000	0.0056	9.5	17.5	18.0	15	2,500	BV/B14	60	F450BV562J3K0(1)	PHE450XB4560JB14(1)
3000	1000	0.0068	11.0	19.0	18.0	15	2,500	BY/B16	55	F450BY682J3K0(1)	PHE450XB4680JB16(1)
3000	1000	0.0047	6.5	14.5	26.0	22.5	1,800	DD/D13	58	F450DD472J3K0(1)	PHE450XD4470JD13(1)
3000	1000	0.0056	6.5	14.5	26.0	22.5	1,800	DD/D13	58	F450DD562J3K0(1)	PHE450XD4560JD13(1)
3000	1000	0.0068	7.0	16.5	26.0	22.5	1,800	DF/D17	55	F450DF682J3K0(1)	PHE450XD4680JD17(1)
3000	1000	0.0082	8.0	16.0	26.0	22.5	1,800	DH/D14	54	F450DH822J3K0(1)	PHE450XD4820JD14(1)
3000	1000	0.010	9.0	18.5	26.0	22.5	1,800	DM/D15	50	F450DM103J3K0(1)	PHE450XD5100JD15(1)
3000	1000	0.012	10.5	19.0	26.0	22.5	1,800	DR/D18	49	F450DR123J3K0(1)	PHE450XD5120JD18(1)
3000	1000	0.015	11.0	21.5	26.0	22.5	1,800	DT/D16	44	F450DT153J3K0(1)	PHE450XD5150JD16(1)
3000	1000	0.018	11.0	21.5	26.0	22.5	1,800	DT/D16	44	F450DT183J3K0(1)	PHE450XD5180JD16(1)
3000	1000	0.022	13.5	23.0	26.0	22.5	1,800	DW/D20	38	F450DW223J3K0(1)	PHE450XD5220JD20(1)
3000	1000	0.027	15.5	24.5	26.0	22.5	1,800	DY/D19	35	F450DY273J3K0(1)	PHE450XD5270JD19(1)
3000	1000	0.033	15.5	24.5	26.0	22.5	1,800	DY/D19	35	F450DY333J3K0(1)	PHE450XD5330JD19(1)
VDC	**VAC**	**Cap Value (µF)**	**T (mm)**	**H (mm)**	**L (mm)**	**Lead Spacing (S)**	**dV/dt (V/µs)**	**Size Code (New/ Legacy)**	**R_{thha} °C/W 85°C 0.2m/s**	**KEMET Part Number**	**Legacy Part Number**

(1) Insert lead and packaging code. See Ordering Options Table for available options.

Soldering Process

The implementation of the RoHS directive has resulted in the selection of SnAgCu (SAC) alloys or SnCu alloys as primary solder. This has increased the liquidus temperature from that of 183ºC for SnPb eutectic alloy to 217 – 221ºC for the new alloys. As a result, the heat stress to the components, even in wave soldering, has increased considerably due to higher pre-heat and wave temperatures. Polypropylene capacitors are especially sensitive to heat (the melting point of polypropylene is 160 – 170ºC). Wave soldering can be destructive, especially for mechanically small polypropylene capacitors (with lead spacing of 5 mm to 15 mm), and great care has to be taken during soldering. The recommended solder profiles from KEMET should be used. Please consult KEMET with any questions. In general, the wave soldering curve from IEC Publication 61760-1 Edition 2 serves as a solid guideline for successful soldering. Please see Figure 1.

Reflow soldering is not recommended for through-hole film capacitors. Exposing capacitors to a soldering profile in excess of the above the recommended limits may result to degradation or permanent damage to the capacitors.

Do not place the polypropylene capacitor through an adhesive curing oven to cure resin for surface mount components. Insert through-hole parts after the curing of surface mount parts. Consult KEMET to discuss the actual temperature profile in the oven, if through-hole components must pass through the adhesive curing process. A maximum two soldering cycles is recommended. Please allow time for the capacitor surface temperature to return to a normal temperature before the second soldering cycle.

Manual Soldering Recommendations

Following is the recommendation for manual soldering with a soldering iron.

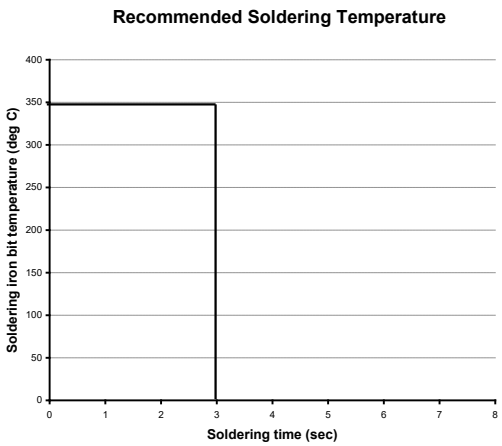

The soldering iron tip temperature should be set at 350°C (+10°C maximum) with the soldering duration not to exceed more than 3 seconds.

Wave Soldering Recommendations

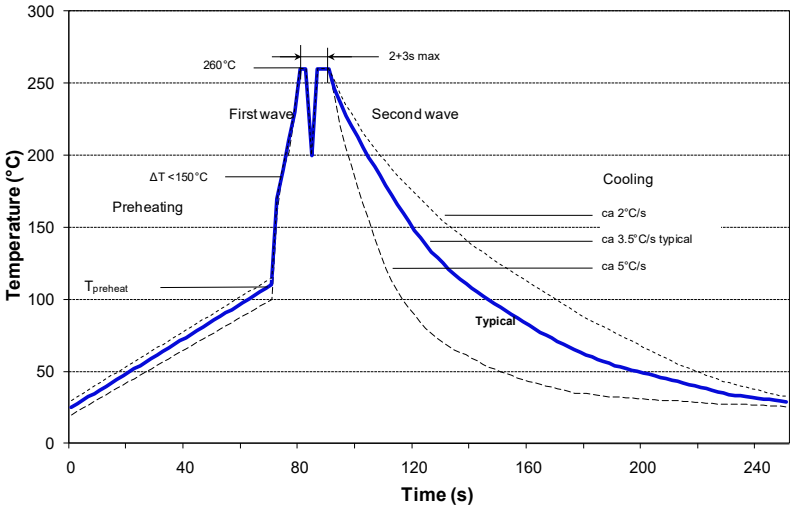

Soldering Process cont.

Wave Soldering Recommendations cont.

1. The table indicates the maximum set-up temperature of the soldering process
Figure 1

Dielectric Film Material	Maximum Preheat Temperature			Maximum Peak Soldering Temperature	
	Capacitor Pitch ≤ 10 mm	Capacitor Pitch = 15 mm	Capacitor Pitch > 15 mm	Capacitor Pitch ≤ 15 mm	Capacitor Pitch > 15 mm
Polyester	130°C	130°C	130°C	270°C	270°C
Polypropylene	100°C	110°C	130°C	260°C	270°C
Paper	130°C	130°C	140°C	270°C	270°C
Polyphenylene Sulphide	150°C	150°C	160°C	270°C	270°C

2. The maximum temperature measured inside the capacitor:
Set the temperature so that inside the element the maximum temperature is below the limit:

Dielectric Film Material	Maximum temperature measured inside the element
Polyester	160°C
Polypropylene	110°C
Paper	160°C
Polyphenylene Sulphide	160°C

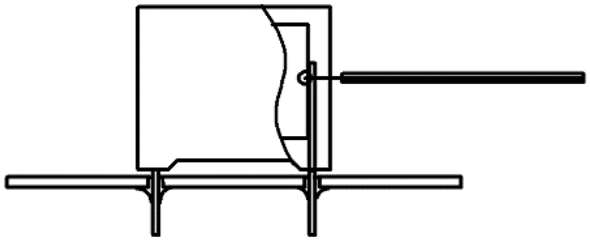

Temperature monitored inside the capacitor.

Selective Soldering Recommendations

Selective dip soldering is a variation of reflow soldering. In this method, the printed circuit board with through-hole components to be soldered is preheated and transported over the solder bath as in normal flow soldering without touching the solder. When the board is over the bath, it is stopped and pre-designed solder pots are lifted from the bath with molten solder only at the places of the selected components, and pressed against the lower surface of the board to solder the components.

The temperature profile for selective soldering is similar to the double wave flow soldering outlined in this document, **however, instead of two baths, there is only one bath with a time from 3 to 10 seconds.** In selective soldering, the risk of overheating is greater than in double wave flow soldering, and great care must be taken so that the parts are not overheated.

Construction

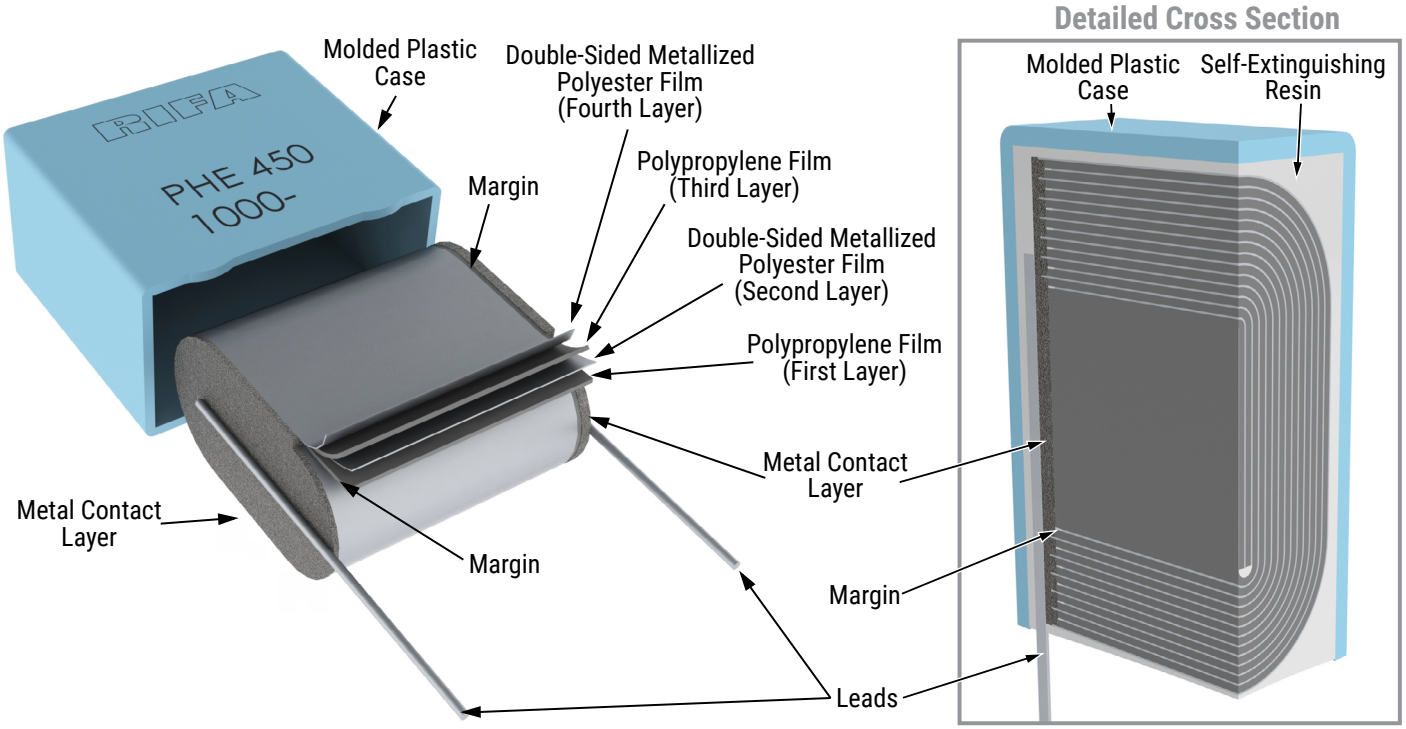

Winding Schemes

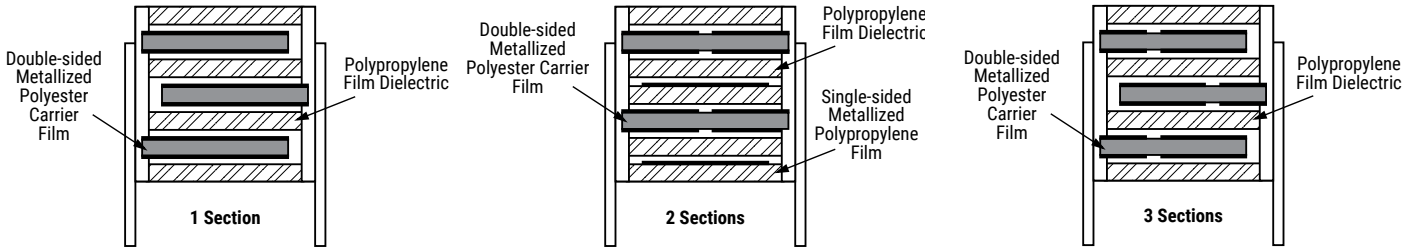

Marking

Variant 1, Pitch > 10 mm:

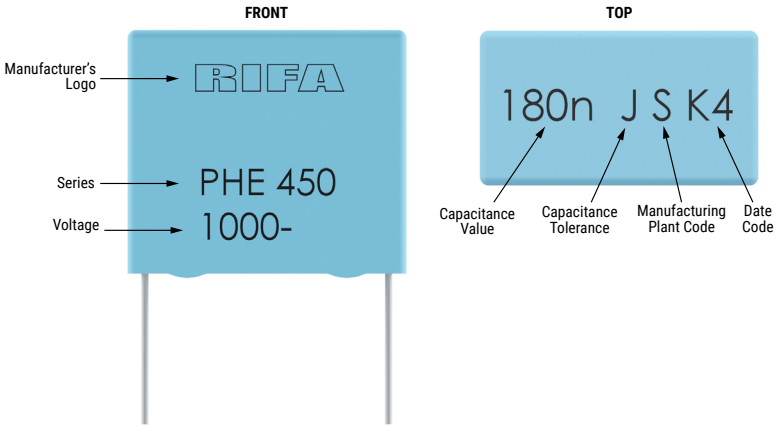

Variant 2, Pitch 7.5 to 27.5 mm:

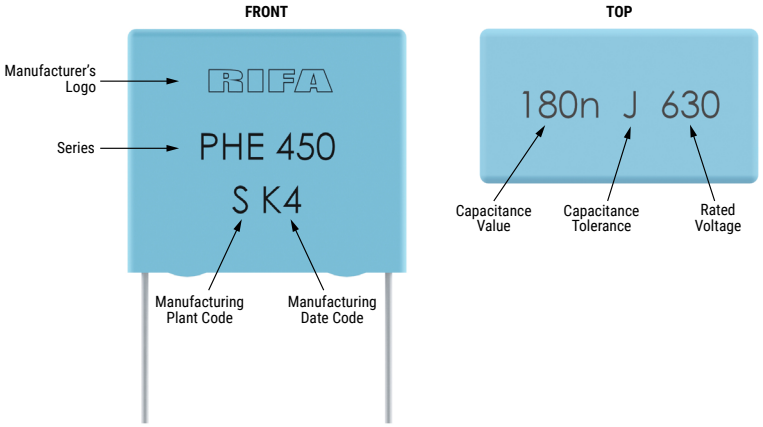

Packaging Quantities

KEMET Size Code	Legacy Size	Lead Spacing	Thickness (mm)	Height (mm)	Length (mm)	Bulk Short Leads	Bulk Long Leads	Standard Reel ø 360 mm	Large Reel ø 500 mm	Ammo	Pizza	Std Reel Formed	Ammo Formed
KE	K00	7.5	2.5	6	10	2,000	2,000	2,500	5,000	3,000			
KG	K01		4	8	10	1,000	1,000	1,700	3,400	1,900			
KK	K03		5	11	10	1,000	1,000	1,300	2,600	1,500			
KM	K04		6	12	10.5	1,000	1,000	1,000	2,000	1,200			
AG	A01	10	4	9	13	1,000	1,000	900	1,800				780
AH	A02		4.5	10.5	13	1,000	1,000	800	1,600				
AK	A03		5	11	13	800	800	700	1,400				
AP	A04		6	12	13	600	600	500	1,000				520
AL	A05		9.5	7.5	13	600	600	350	700				
AE	A06		4	8	13	1,000	1,000	900	1,800				

Packaging Quantities cont.

KEMET Size Code	Legacy Size	Lead Spacing	Thickness (mm)	Height (mm)	Length (mm)	Bulk Short Leads	Bulk Long Leads	Standard Reel ø 360 mm	Large Reel ø 500 mm	Ammo	Pizza	Std Reel Formed	Ammo Formed
BD	B04	15	5.5	10.5	18	1,000	800	600	1,200			550	570
BE	B05		5.5	12.5	18	1,000	800	600	1,200			550	570
BL	B06		7.5	14.5	18	800	400	400	800			350	378
BJ	B10		6.5	12.5	18	1,000	600	500	1,000			450	480
BQ	B11		8.5	16	18	600	400	400	800			350	324
BM	B12		8	15	18	600	400	400	800			350	351
BV	B14		9.5	17.5	18	500	300	350	700			250	297
BG	B15		6	12	18	1,000	800	500	1,000			450	520
BY	B16		11	19	18	450	250	300	600			250	252
BU	B17		13	12.5	18	400	300	250	500			200	216
DD	D13	22.5	6.5	14.5	26	234		300	600		440		
DH	D14		8	16	26	186		250	500		352		
DM	D15		9	18.5	26	308		250	500		308		
DT	D16		11	21.5	26	253		200	400		253		
DF	D17		7	16.5	26	216		300	600		396		
DR	D18		10.5	19	26	264		200	400		264		
DY	D19		15.5	24.5	26	176		110	250		176		
DW	D20		13.5	23	26	209		160	300		209		
FK	F03	27.5	13.5	23	31.5	171			250		171		
FE	F11		10.5	20.5	31.5	216			350		216		
FG	F12		11.5	22.5	31.5	198			300		198		
FM	F13		14.5	24.5	31.5	153			250		153		
FR	F14		17.5	28	31.5	126					126		
FS	F15		19	29	31.5	117					117		
FV	F16		21	30	31.5	108					108		
FH	F17		21	12.5	31.5	108					108		
FT	F18		31	19	31.5	72					72		
FQ	F19		27.5	16	31.5	81					81		
RK	R02	37.5	16.5	32	41	105					105		
RM	R03		19	36	41	91					91		
RH	R04		15	26	41	119					119		
RF	R05		13	24	41	140					140		
RP	R06		21	38	41	84					84		
RS	R08		28	43	41	54					63		

Lead Taping & Packaging (IEC 60286–2)

Lead Spacing 5 mm

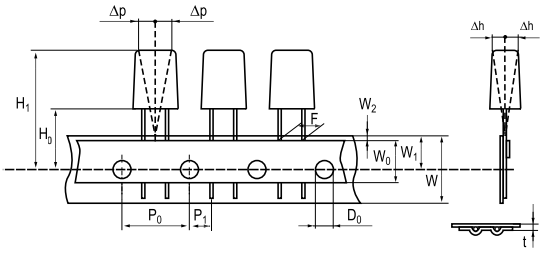

Lead Spacing 7.5 mm

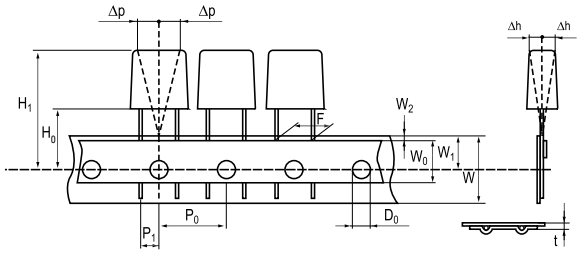

Lead Spacing 10 – 15mm

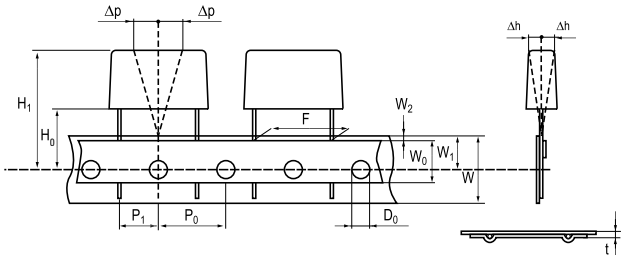

Lead Spacing 22.5 – 27.5 mm

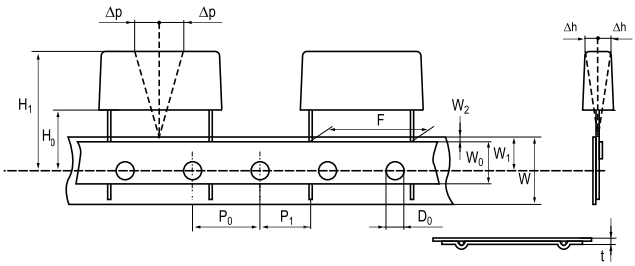

Formed Leads from 10 and 15 mm to 7.5 mm

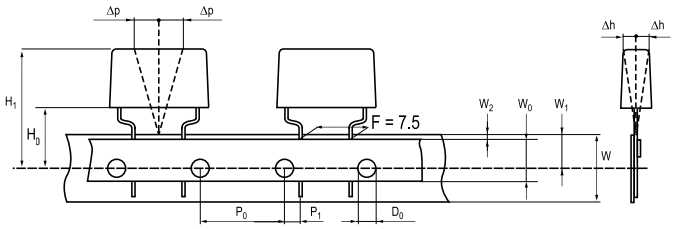

Taping Specification

Dimensions in mm										Standard IEC 60286-2
Lead Spacing	+0.6/−0.1	F	5	7.5	Formed 7.5	10	15	22.5	27.5	F
Carrier Tape Width	±0.5	W	18	18	18	18	18	18	18	18+1/−0.5
Hold-down Tape Width	Minimum	W_0	5	5	5	5	5	5	5	
Position of Sprocket Hole	±0.5	W_1	9	9	9	9	9	9	9	9+0.75/−0.5
Distance Between Tapes	Maximum	W_2	3	3	3	3	3	3	3	3
Sprocket Hole Diameter	±0.2	D_0	4	4	4	4	4	4	4	4
Feed Hole Lead Spacing	±0.3	P_0 (1)	12.7	12.7	12.7 (4)	12.7	12.7	12.7	12.7	12.7
Distance Lead – Feed Hole	±0.7	P_1	3.85	3.75	3.75	7.7	5.2	5.3	5.3	P1
Deviation Tape – Plane	Maximum	Δ p	1.3	1.3	1.3	1.3	1.3	1.3	1.3	1.3
Lateral Deviation	Maximum	Δ h	2	2	2	2	2	2	2	2
Total Thickness	±0.2	t	0.7	0.7	0.7	0.7	0.7	0.9 Maximum	0.9 Maximum	0.9 Maximum
Sprocket Hole/Cap Body	Nominal	H_0 (2)	18.5±0.5	18.5±0.5	18.5±0.5	18.5±0.5	18.5±0.5	18.5±0.5	18.5±0.5	18.0+2/−0
Sprocket Hole/ Top of Cap Body	Maximum	H_1 (3)	32	31	43	43	43	58	58	58 Maximum

(1) Maximum cumulative feed hole error, 1 mm per 20 parts
(2) 16.5 mm available on request
(3) Depending on case size
(4) 15 mm available on request

Lead Taping & Packaging (IEC 60286-2) cont.

Ammo Specifications

Series	Dimensions (mm)		
	H	W	T
R4x, R4x+R, R7x, RSB	360	340	59
F5A, F5B, F5D			
F6xx, F8xx			
PHExxx, PMExxx, PMRxxx, SMR & PFR	330	330	50

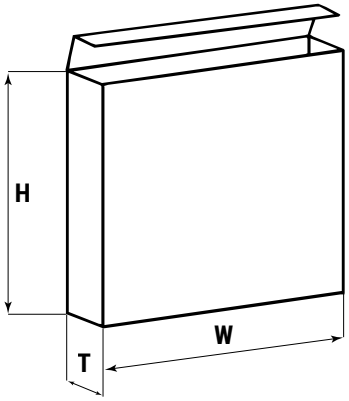

Reel Specifications

Series	Dimensions (mm)		
	D	H	W
R4x, R4x+R, R7x, RSB	355 500	30 25	55 (Max)
F5A, F5B, F5D			
F6xx, F8xx			
PHExxx, PMExxx, PMRxxx, SMR & PFR	360 500	30	46 (Max)

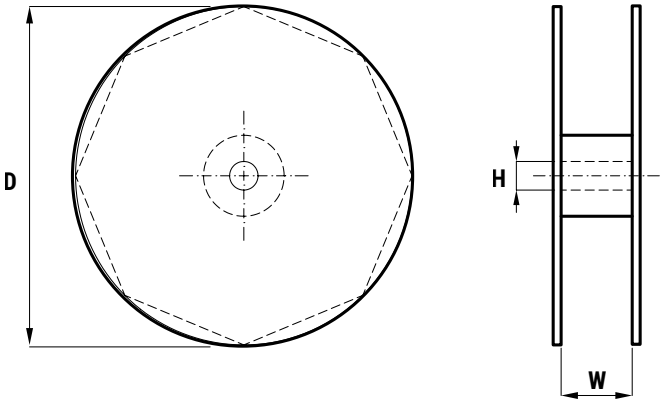

Manufacturing Date Code (IEC–60062)

Y = Year, Z = Month			
Year	Code	Month	Code
2010	A	January	1
2011	B	February	2
2012	C	March	3
2013	D	April	4
2014	E	May	5
2015	F	June	6
2016	H	July	7
2017	J	August	8
2018	K	September	9
2019	L	October	O
2020	M	November	N
2021	N	December	D
2022	P		
2023	R		
2024	S		
2025	T		
2026	U		
2027	V		
2028	W		
2029	X		
2030	A		

KEMET Electronics Corporation Sales Offices

For a complete list of our global sales offices, please visit www.kemet.com/sales.

Disclaimer

All product specifications, statements, information and data (collectively, the "Information") in this datasheet are subject to change. The customer is responsible for checking and verifying the extent to which the Information contained in this publication is applicable to an order at the time the order is placed. All Information given herein is believed to be accurate and reliable, but it is presented without guarantee, warranty, or responsibility of any kind, expressed or implied.

Statements of suitability for certain applications are based on KEMET Electronics Corporation's ("KEMET") knowledge of typical operating conditions for such applications, but are not intended to constitute – and KEMET specifically disclaims – any warranty concerning suitability for a specific customer application or use. The Information is intended for use only by customers who have the requisite experience and capability to determine the correct products for their application. Any technical advice inferred from this Information or otherwise provided by KEMET with reference to the use of KEMET's products is given gratis, and KEMET assumes no obligation or liability for the advice given or results obtained.

Although KEMET designs and manufactures its products to the most stringent quality and safety standards, given the current state of the art, isolated component failures may still occur. Accordingly, customer applications which require a high degree of reliability or safety should employ suitable designs or other safeguards (such as installation of protective circuitry or redundancies) in order to ensure that the failure of an electrical component does not result in a risk of personal injury or property damage.

Although all product–related warnings, cautions and notes must be observed, the customer should not assume that all safety measures are indicated or that other measures may not be required.

KEMET is a registered trademark of KEMET Electronics Corporation.