Vision Sensor

F160

Impressive high speed opens up new possibilities

Features

Can be applied to ultra-fast manufacturing lines. Full range of detection features within the required cycle time. Contributes to improved detection quality.

The newly developed double-speed camera makes it possible to read in images as much as 4 times faster than previous speeds, and also achieves an impressive image processing speed 2 to 10 times faster than previous speeds. For example, using dark-light search processing in Figure 1, the camera can be used on ultra high-speed lines handling approximately 5000 pieces per minute. Because each single inspection is fast, multiple inspection tasks can be carried out with minimal increase in time. Inspection tasks that were previously impossible due to insufficient time can also be added for a big contribution to inspection quality.

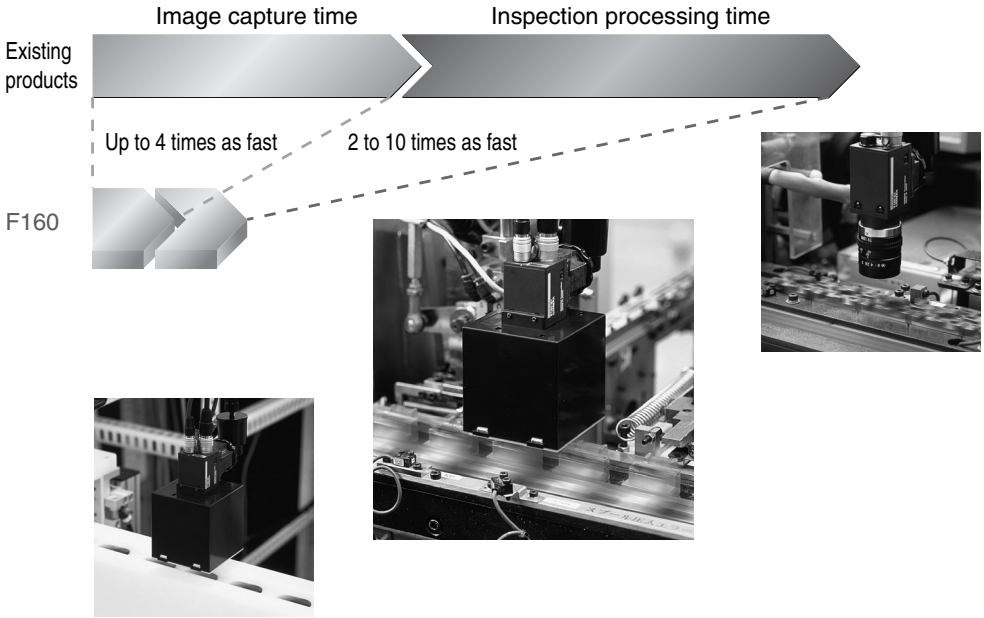

Example: Gray Search Processing (Picture 1)

Example: More than one inspection item

Features

Equipped with a memory card for low-cost introduction on multi-type lines and a dramatic increase in the number of scenes. Moreover, this is a single-stand system, thus, easily implemented.

The F160 unit is equipped with a memory card slot. The scene number can be easily increased by simply inserting a card. For example, a 128-MB card can store approximately 1000 scenes. (*) No more need to build a scene data communication system using computers.

* The number of scenes that can be stored varies depending on the scene settings.

Enhanced image memory function

Up to 35 measurement images or failure images can be stored. The most recent failure image can be displayed while measurement continues, enabling analysis of the failure without stopping the line.

Good product image

Improper product image

Wide range of camera variations

In addition to the double-speed camera, our F150 camera can also be connected. This lets you select the optimum camera for your speed, cost, and lighting needs.

Double-speed camera

F160-S1/S2/SLC20/SLC50

Eight shutter speeds can be selected from the controller. An intelligent-lighting type is also available.

F150 camera

F150-S1AESLC20/SLC50ESL20A/SL50A

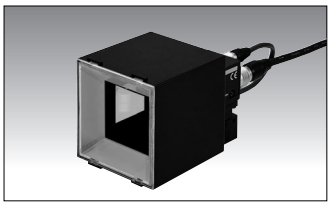

Compact and affordable. Intelligent lighting and small LED lighting types are also available.

I/O monitor

The status of the input/output terminals can be displayed as a list. This is a big help for a wiring check during adjustment.

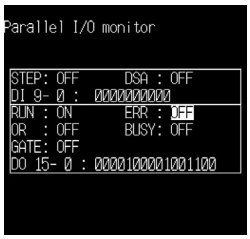

Screen capture function

Menu setting screens, measurement screens, and failure images can be captured and stored in the memory card. These images can be used in manuals and reports created on a computer.

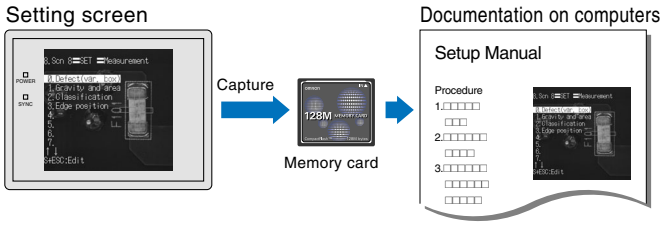

Features

Operation

Menu masking function

Menu items that should not be changed on-site can be hidden to prevent incorrect operation. This also improves operability and saves time when changing menu settings.

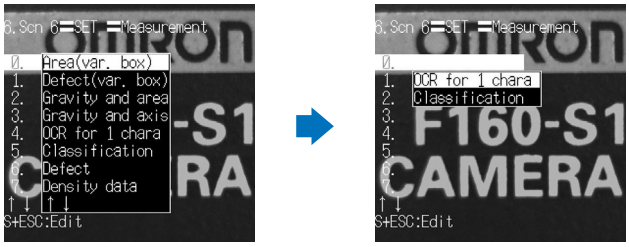

Password function

Operation access can be limited to personnel who have been issued a password. This contributes to increased security.

Screen

Screen messages

Change to the language used on-site. Can be displayed in any position on the screen.

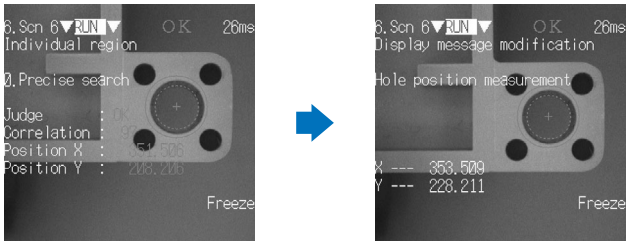

Graphic drawing function

This allows you to draw straight lines, rectangles, cross-hair cursors, and other graphics. Graphics can be drawn on measurement positions as well.

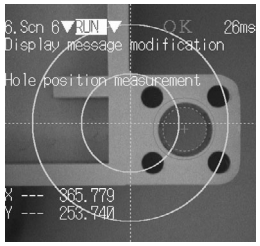

Output

RS-232C format

The output format can be changed to meet the specifications of the system.

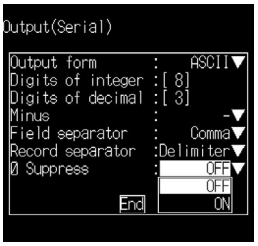

Short-cut key function

Frequently used operations can be assigned to special keys on the console. Switch menus at the touch of a key.

Measurement image

Line-brightness display

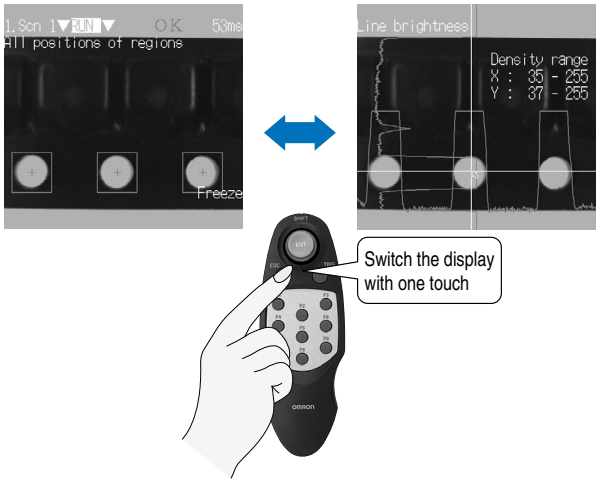

The character size can be selected, and even highlighting is possible.

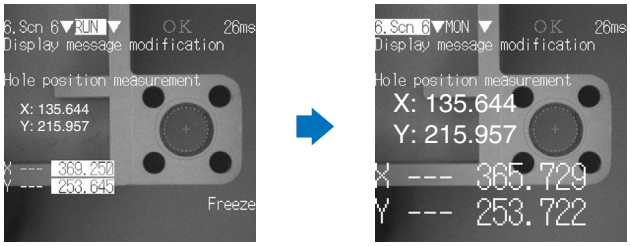

Color display function

Colors can be added to displayed messages and graphics for easier viewing.

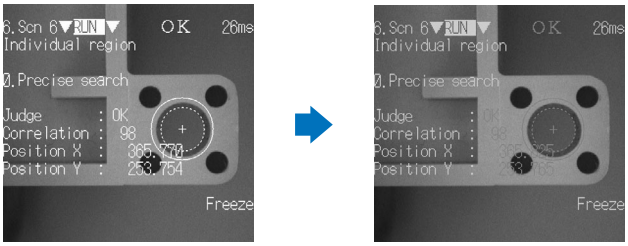

Dialog menu

Dialog-type menus allow even beginners an easy performance of settings.

F160

Features

QUEST Character Recognition

F160 uses OMRON's character recognition system - QUEST.
Features

- The user does not have to register characters.
- High discrimination level of similar characters.
- Adapts to fluctuations in shape and size.

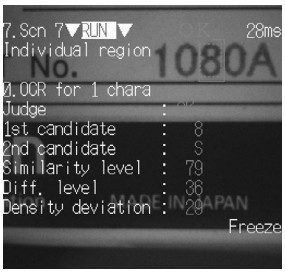

Use for any type of character

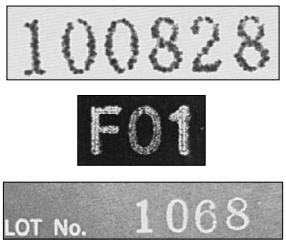

"Variable Box" Measurement for Defect Inspection

The measurement area can be set to change automatically when performing inspections for objects with varying sizes, such as electronic chip components. This feature ensures that the optimum measurement areas are always used for inspection.

Setting screen

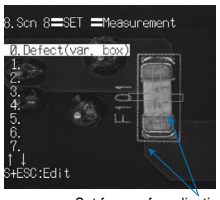

Set frames for adjusting the region size

Measurement screen

The inspection region automatically adapts to the object size.

Flexible Search

This method performs a matching using more than one reference image and so F160 can perform inspection for objects with varying shapes. This feature helps to reduce incorrect evaluations.

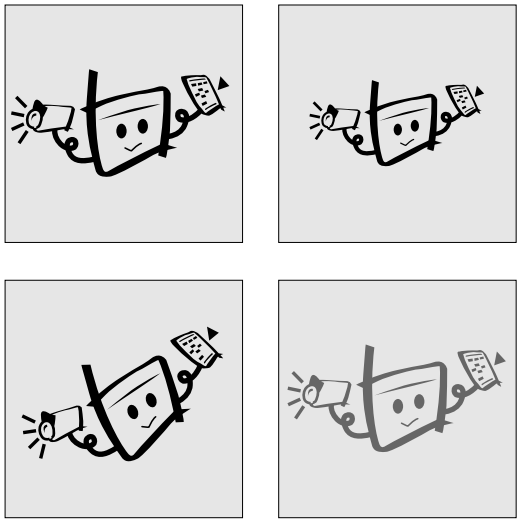

Matching can be performed for products with varying shapes by using more than one reference image.

Rotation search

This function rotates the image while searching. Processing speed is 10 times higher than previous models. Angle interpolation enables high-precision angle detection.

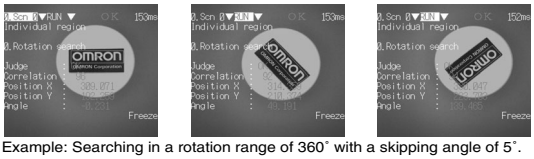

Example: Searching in a rotation range of 360˚ with a skipping angle of 5˚.

Classification

A search is performed using multiple stored models, and the best-matching model number is output. The flexible search function can also be used for work shapes.
Can handle variations in shape.

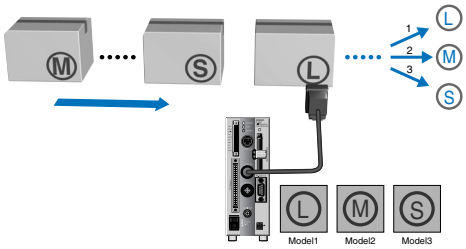

Edge width

The positions of both edges of an object are detected with high accuracy, and from this the width of the object is calculated. It is not necessary to set expressions for calculating the width.

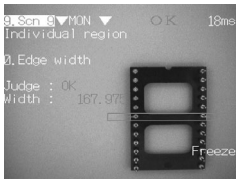

Position displacement compensation

F160 permits compensation using only the outline of the object, 2-stage position compensation, and setting priorities for the compensation direction.

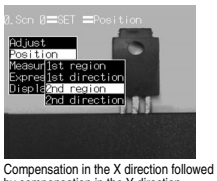

Compensation in the X direction followed by compensation in the Y direction.

Labeling

The number of labels (i.e., objects) inside the measurement area is counted. After they have been sorted according to area or center of gravity, the measurement data for specified labels is output.

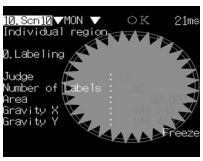

Counting gears

Inspecting the position and number of buttons

Expressions

Evaluation and data output based on a maximum of 32 expressions is possible. Up to 32 variables (representing other expressions) can be used, enabling more complex calculations.

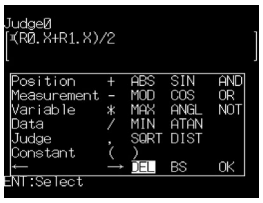

Ordering information

Name		Model	Remarks
Controller		F160-C10E-2	NPN Input/Output
Controller		F160-C15E-2	PNP Input/Output
Double-speed camera	Camera with intelligent lighting	F160-SLC20	
		F160-SLC50	
	Camera only	F160-S1	
		F160-S2	With partial scan function.
Compatible F150 cameras	Camera with intelligent lighting	F150-SLC20	
		F150-SLC50	
	Camera with light	F150-SL20A	
		F150-SL50A	
	Camera only	F150-S1A	
Console		F160-KP	
		F150-KP	
Color LCD monitor		F150-M05L	
Monochrome CRT Video monitor		F150-M09	
Memory card		F160-N64S(S)	Memory capacity 64 MB
Camera cable		F150-VS	For Double-speed Camera and compatible F150 Cameras. Cable length: 3 m[*1]
Monitor cable		F150-VM	Cable length: 2 m[*1]
Parallel cable		F160-VP	Loose-wire cable for parallel I/O connectors. Cable length: 2 m

*1. Other length on request

Rating/Performance

Controller: F160-C10E-2/F160-C15E-2

Item Specifications	Conversational Menu Mode	Expert Menu Mode
Connectable cameras	F150-S1A/SL20A/SL50A/SLC20/SLC50, F160-S1/S2/SLC20/SLC50, etc.	
Number of cameras connectable	1	2
Number of pixels	512 x 484 (H x V)	
Number of scenes	32 scenes (Expansion possible using Memory Card)	
Image storage function	Maximum of 35 images stored	
Filtering	---	Smoothing (strong/weak), edge enhancement, edge extraction (horizontal, vertical, both horizontal and vertical), dilation, erosion, median, background suppression
Position displacement compensation	Set either automatically or manually Compensation directions: X, Y, and (360°) directions	Compensation directions: X, Y, and (360°)directions Detection methods: Binary center of gravity, axis angle, labeling, rotation search, gray search, edge position
Number of measurement regions	32 regions per scene	
Applications	7 types available (presence, orientation, dimensions,defects, conformity, position, chips and burs	---
Measurement data	Automatically selected according to the application	Gravity and area, gravity and axis, gray search, precise search, rotation search, flexible search, relative search, defect, area (variable box), defect (variable box), edge position, edge pitch, edge width, density average, labeling, OCR for 1 character, classification
Data operation functions (expressions)	---	Number: 32 expressions can be set for judgements, data, and variables used in other expressions. Operations: Arithmetic operations, square root, absolute value, remainder, distance, angle, maximum, minimum, SIN, COS, ATAN, AND, OR, NOT
Result output	Overall judgements, judgements for each measurement region	Overall judgements, judgements for each measurement region, expression results, measurement/expresion data
Functions for customizing operations	---	Menu masking , password setting, shortcut keys
Functions for customizing screens	---	Display items: Character strings (measured values, judgement results, times, user-specified characters, measurement region names) Specified parameters: Display color, position, size
Number of slots for Memory Cards	1	
Monitor interface	1 channel (color, monochrome)	
Serial communications	RS-232C/422A 1 channel	
Parallel I/O	13 inputs and 22 outputs including control I/O points	
Input/ Output type NPN	F160-C10E	
Input/ Output type PNP	F160-C15E	
Power supply voltage	20.4 to 26.4 VDC	
Current consumption	Approx. 1.6 A (when two F160-SLC50 Cameras connected)	
Ambient temperature	Operating: 0 to 50°C, Storage: -25 to 65°C (with no ice formation or condensation)	
Ambient humidity	Operating and storage: 35 to 85% (with no condensation)	
Dimensions	56 x 160 x 110 (W x H x D) mm (not including connectors and other protruding parts)	
Weight	Approx. 570 g (Controller only)	

Double-speed camera: F160-S1/S2

Picture element	1/3“ Interline CCD
Effective pixels	659 x 44 (H x V)
Scanning method	1/60-s non-interlace (frame) mode, 1/120-s 2:1 interlace (field) mode
Shutter	Electronic shutter; select from 8 shutter-speed settings (1/120 to 1/20,000 s) using menu
Camera with Intelligent Lighting	F160-SLC20 (field of vision: 20 mm), F160-SLC50 (field of vision: 50 mm)
Ambient temperature	Operating: 0 to +50°C Storage: -25 to +60°C (with no icing or condensation)
Ambient humidity	Operating and Storage: 35 to 85% RH (with no condensation)
External Dimensions	31 x 40 x 54.5 (W x H x D) mm (not including connectors and other protruding parts)
Weight	Approx. 85 g (Camera only)

Monitor

Model number Item / Name	F150-M05L Color LCD monitor	F150-M09 Monochrome CRT Video Monitor
Size	5.5 inches	9 inches
Type	Liquid crystal color TFT	CRT monochrome
Resolution	320 x 240 dots	800TV or min. (at center)
Input signal	NTSC composite video (1.0 V / 75)	
Power supply voltage	20.4 to 26.4 VDC	100 to 240 VAC (-15%, +10%)
Current consumption	Approx. 700 mA	Approx. 400 mA
Ambient temperature	Operating: 0 to +50°C Storage: -25 to +65°C (with no icing or condensation)	Operating: -10 to +50°C Storage: -20 to +65°C (with no icing or condensation)
Ambient humidity	Operating or storage: 35% to 85% (with no condensation)	Operating or Storage: 10% to 90% (with no condensation)
Weight (Monitor only)	Approx. 610 g	Approx. 4.5 kg
Accessories	Instruction manual and 4 mounting brackets	Instruction manual

System configuration

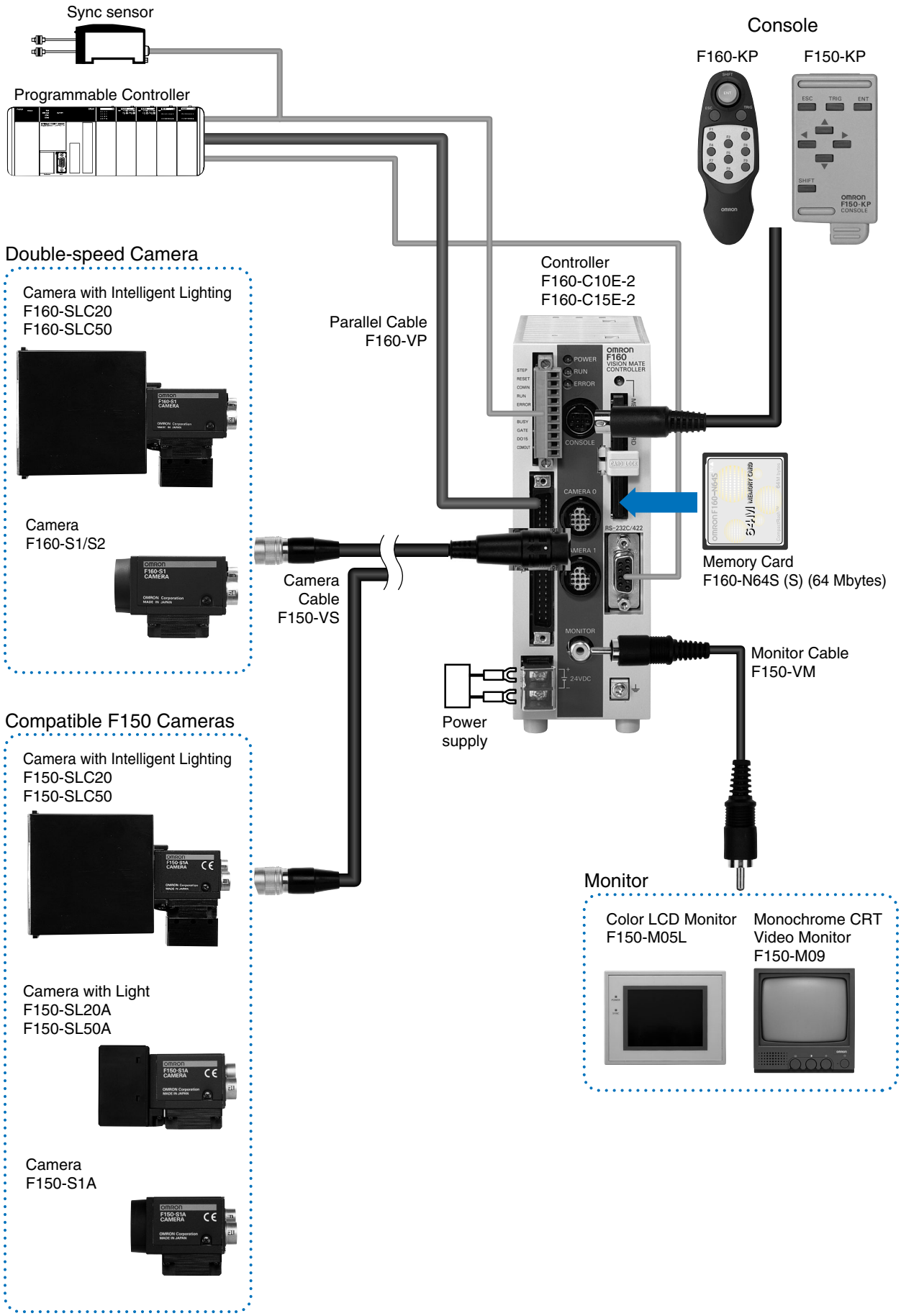

Name and function of each part

F160-C10E/F160-C15E

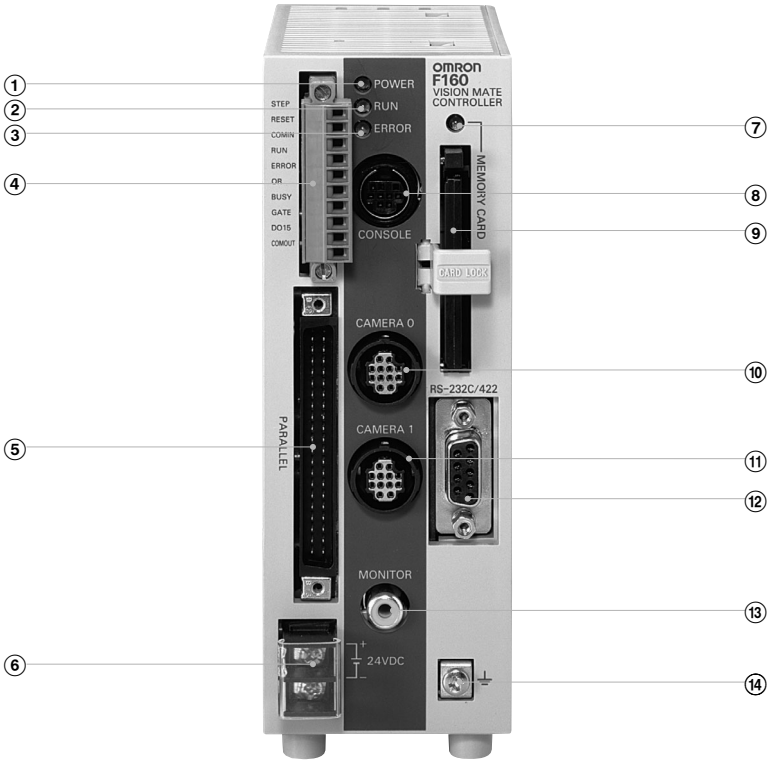

① **POWER LED**
Illuminates while the power is on.

② **RUN LED**
Illuminates while the system is in measurement mode.

③ **ERROR LED**
Illuminates when a problem occurs.

④ **Input terminal (control line)**
Connects to a synchronous sensor or programmable controller.

⑤ **Input/output connector (data line)**
Connects to a synchronous sensor or programmable controller.

⑥ **Power terminal**
Connects to the power supply.

⑦ **Memory card LED**
Illuminates during memory access.

⑧ **Console connector**
Connects to the console.

⑨ **Memory card slot**
A memory card inserts into this slot.

⑩ **CAMERA 0 connector**
Connects to a camera.

⑪ **CAMERA 1 connector**
Connects to a camera.

⑫ **RS-232C/422 connector**
Connects to a computer or programmable controller.

⑬ **Monitor connector**
Connects to a monitor.

⑭ **Ground terminal**
Connect the ground wire to this terminal.

Function menu

Menu structure diagram

Dialog menu

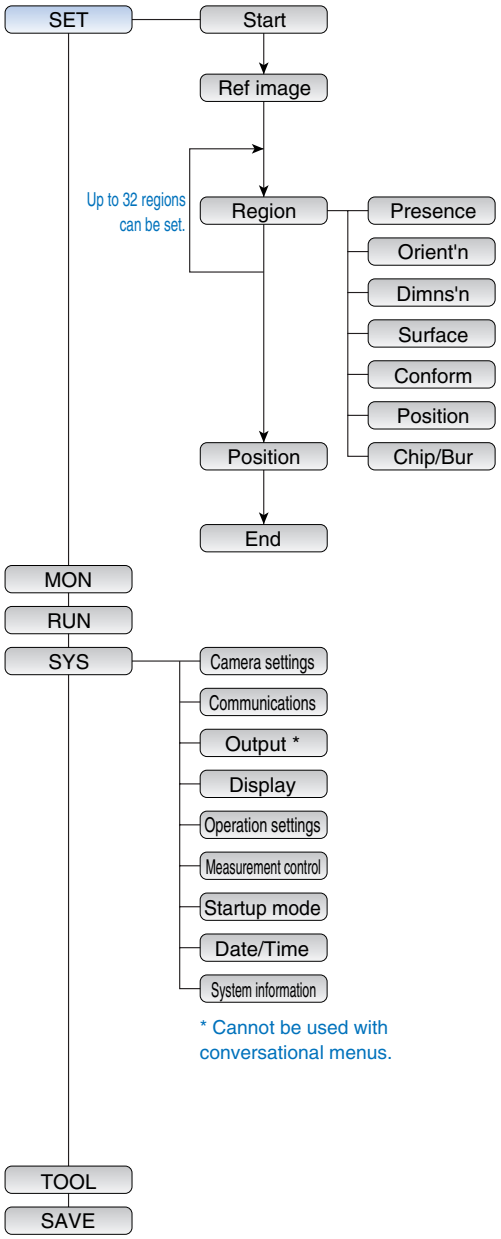

Expert menu

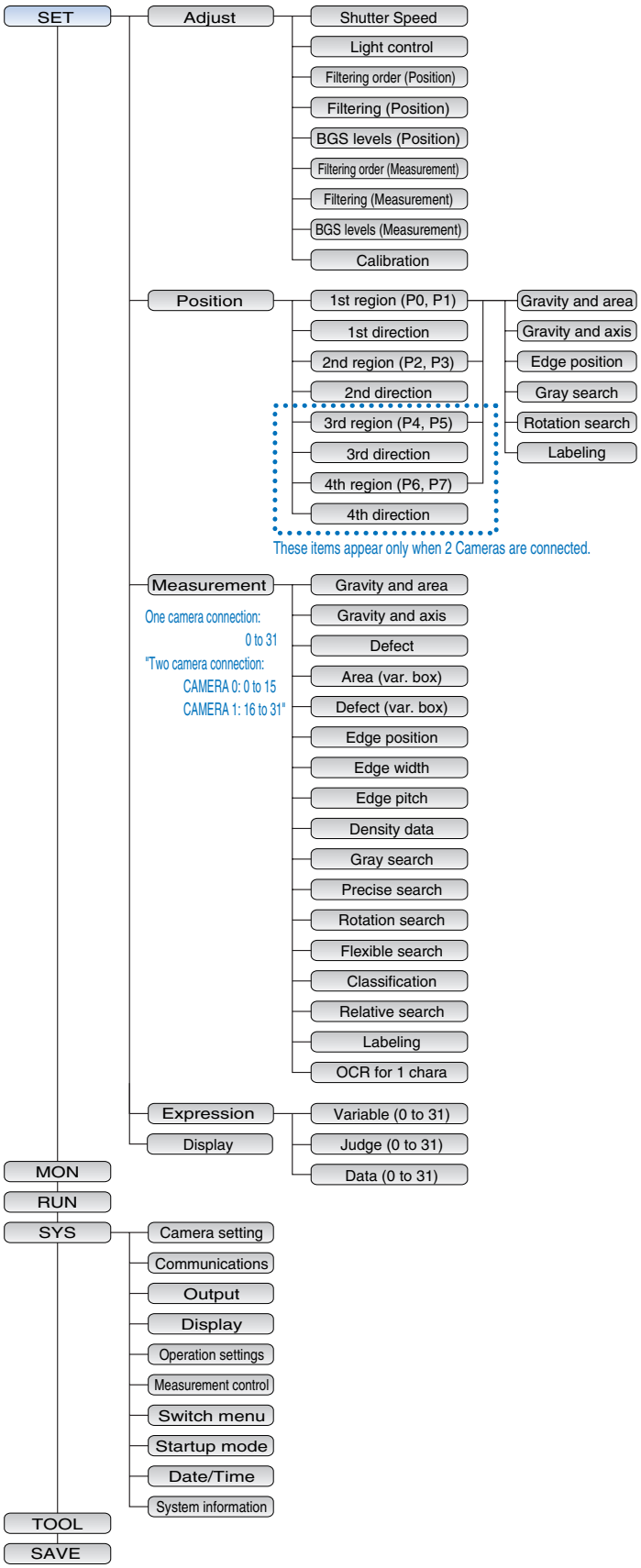

Dimensions (Unit: mm)

Controller

F160-C10E/F160-C15E

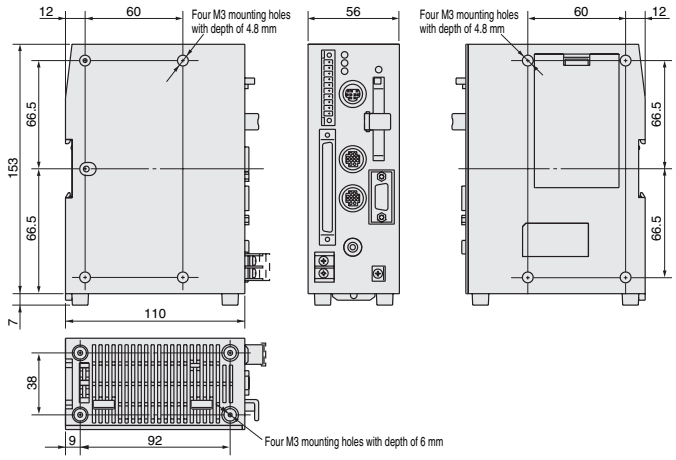

Double-speed camera

F160-S1/S2

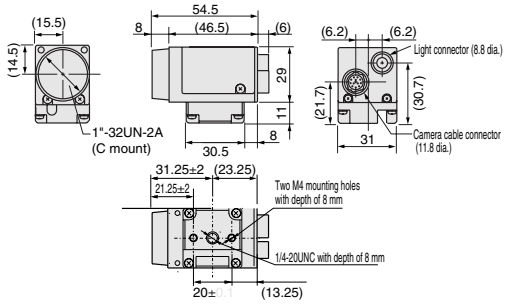

F160-SLC20 (with F150-LTC20 intelligent lighting)

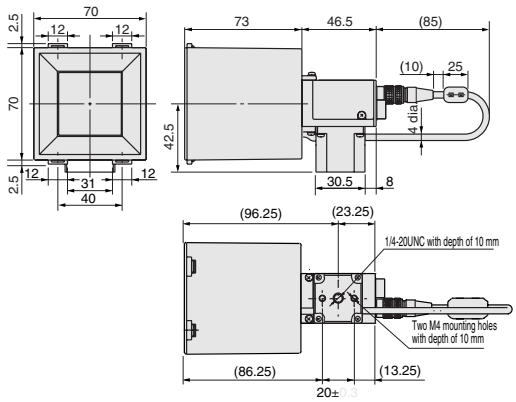

F160-SLC50 (with F150-LTC50 intelligent lighting)

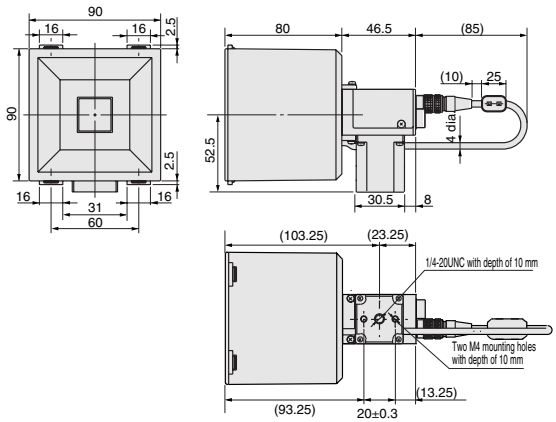

Console

F160-KP

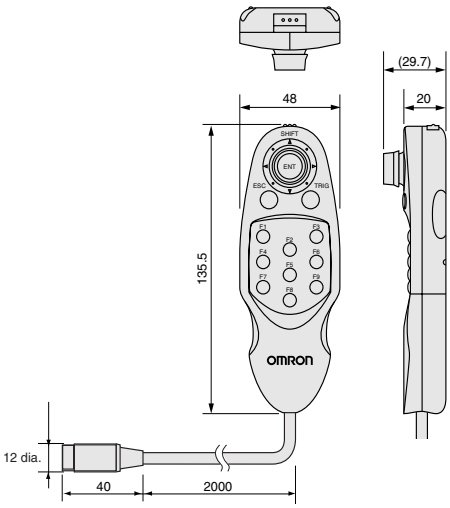

F150-KP

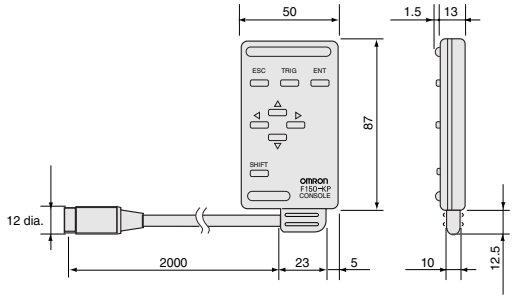

LCD monitor

F150-M05L

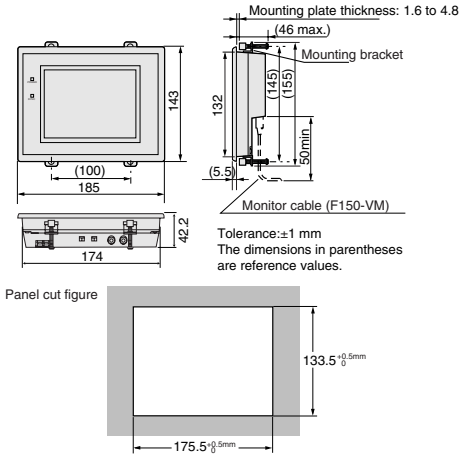

Video monitor

F150-M09

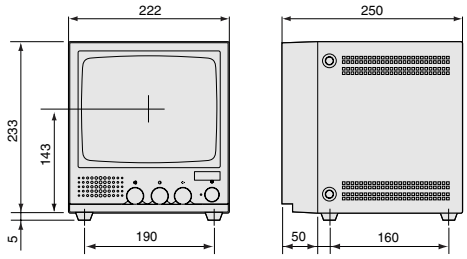

F160

ALL DIMENSIONS SHOWN ARE IN MILLIMETERS.
To convert millimeters into inches, multiply by 0.03937. To convert grams into ounces, multiply by 0.03527.

Cat. No. Q04E-EN-02

In the interest of product improvement, specifications are subject to change without notice.