Rotary Encoder

Model EN16 Series

Features:

- 16 mm
- 2 bits gray code
- Incremental/contacting type
- Metal bushing/shaft

RoHS 2 compliant

Model Styles Available

Top Adjust, PCB pins	EN16-H
Side Adjust, PCB pins	EN16-V

Electrical

Pulses (Per Revolution)	12 & 24
Closed Circuit Resistance, Ohms	3 Ohms, max.
Contact Rating	0.5mA/ 5Vdc
Operating Current, Maximum	0.5mA
Dielectric Strength	50Vac/ 1mA, I minute
Insulation Resistance, Minimum	10M ohms at 50Vdc/ 1mA
Sliding Noise (at 60 RPM)	2.0ms max.
Contact Bounce (at 15 RPM)	5.0ms max.
Operating speed (RPM)	100 RPM max.
Actual Electrical Travel, Nominal	Continuous

Mechanical

Total Mechanical Travel	Continuous
Detents (per Revolution)	0,12, 24
Rotational Torque of Detent, Maximum	2.5 oz-in

Environmental

Operating Temperature Range	-30°C to +85°C
Rotational Life	30,000 cycles

General Note
TT Electronics reserves the right to make changes in product specification without notice or liability. All information is subject to TT Electronics' own data and is considered accurate at time of going to print.

© TT electronics plc

TT Electronics | BI Technologies
Circulo de la Amistad #102 PIMSA IV Mexicali B.C. Mexico C.P 21210
Ph: +1 714 447 2345
www.ttelectronics.com/bi-technologies

Ordering

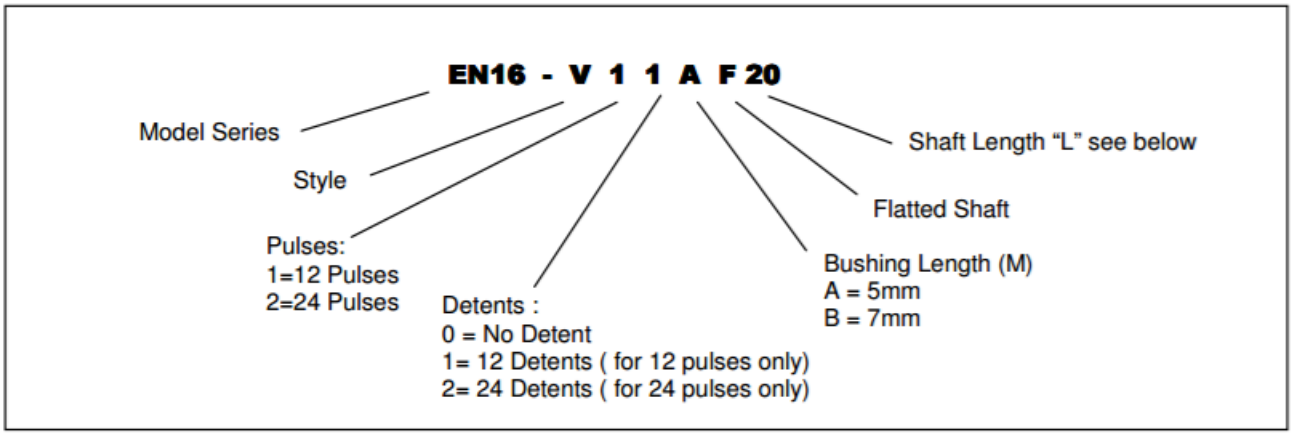

Shaft Length options

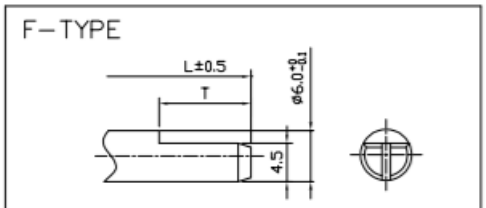

L	15	20	25	30
T	7	12	12	12

Circuit Diagram

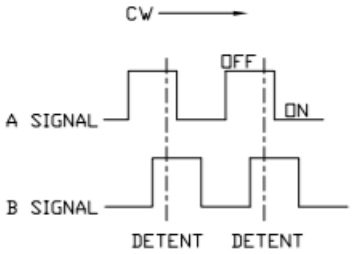

TT Electronics | BI Technologies
Circulo de la Amistad #102 PIMSA IV Mexicali B.C. Mexico C.P 21210
Ph: +1 714 447 2345
www.ttelectronics.com/bi-technologies

© TT electronics plc

Outline Drawings

EN16-H (Top Adjust, PCB pins)

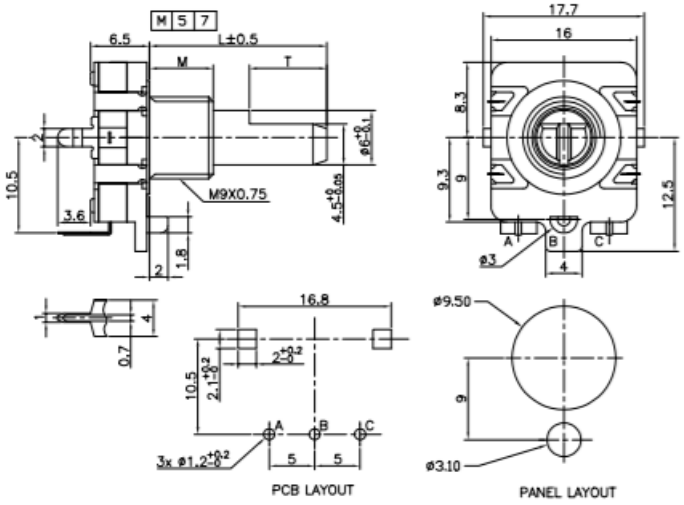

EN16-V (Side Adjust, PCB pins)

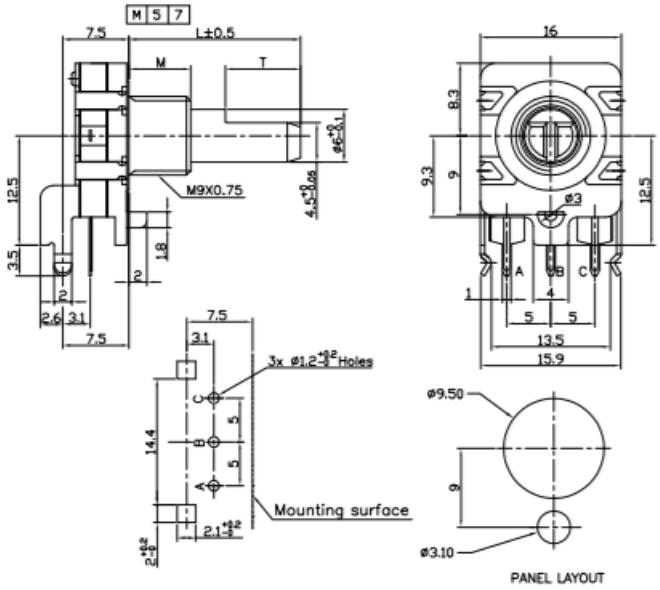

TT Electronics | BI Technologies
Circulo de la Amistad #102 PIMSA IV Mexicali B.C. Mexico C.P 21210
Ph: +1 714 447 2345
www.ttelectronics.com/bi-technologies

© TT electronics plc