EM2742 Series
EuroMag Terminal Blocks
Screwless; 2.54 Centers

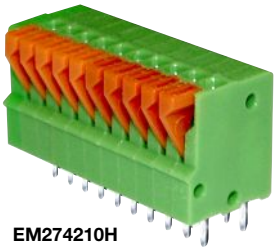
EM274210H

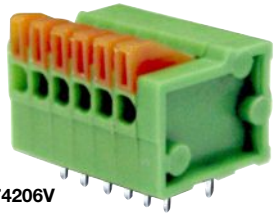
EM274206V

SPECIFICATIONS
Rating: 6A, 150V
Center Spacing: 0.10" (2.54mm)
Wire Range: #20-26 AWG
Housing Material: UL rated 94V0 Thermoplastic
Contact Material: Tin-Plated Brass
Spring Material: Stainless Steel
Operating Temperature: 105°C (221°F) max., -40°C (-40°F) min.
Recommended PCB Hole Diameters: 0.051" (1.30mm)
Construction: Mold-to-Length
Agency Information: c UL us File E62622; CE Certified

Poles	L (mm)	Poles	L (mm)
2	8.08	10	30.94
3	10.62	11	33.48
4	13.16	12	36.02
5	15.70	13	38.56
6	18.24	14	41.10
7	33.48	15	43.64
8	30.94	16	46.18
9	28.40		

To convert to inches, divide by 25.4

Dimensions - mm (in)

VERTICAL

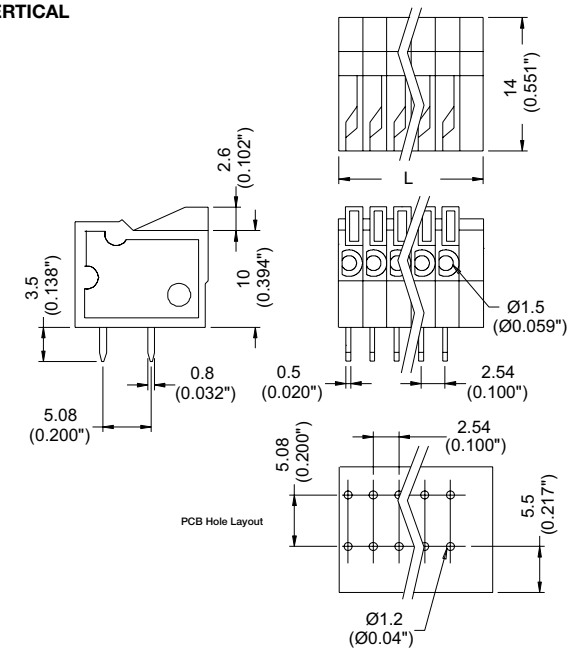

HORIZONTAL

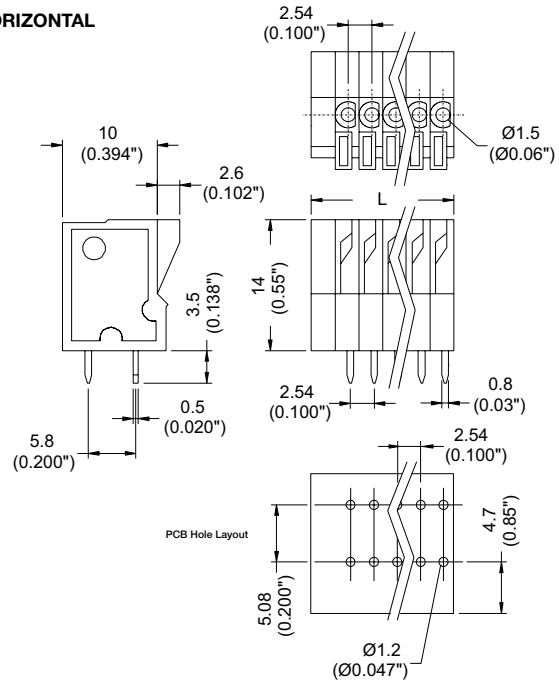

Part Numbering System

Series	# of Poles	Orientation
EM2742	☐☐	☐
	02 to **16**	**H** - horizontal **V** - vertical