Photomicrosensor (Transmissive)

EE-SX153

Slot Type (Slot Width: 3.4 mm)

- Horizontal aperture type
- Mounted with M2 screws

⚠ **Be sure to read *Safety Precautions* on Page 3.**

RoHS Compliant

Ordering Information

Photomicrosensor

Appearance	Sensing method	Connecting method	Sensing distance	Aperture size (H × W) (mm)	Output type	Model	Minimum packing unit (Unit: pcs)
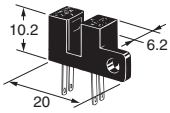	Transmissive (slot type)	Terminal for cord soldering	3.4 mm (Slot width)	Both emitting side and detecting side 0.5 × 2.1	Phototransistor	**EE-SX153**	1

Note: Order in multiples of minimum packing unit.

Ratings, Characteristics and Exterior Specifications

Absolute Maximum Ratings (Ta = 25°C)

Item		Symbol	Rated value	Unit
Emitter				
	Forward current	I_F	50*1	mA
	Pulse forward current	I_{FP}	1*2	A
	Reverse voltage	V_R	4	V
Detector				
	Collector-Emitter voltage	V_{CEO}	30	V
	Emitter-Collector voltage	V_{ECO}	—	V
	Collector current	I_C	20	mA
	Collector dissipation	P_C	100*1	mW
Operating temperature		T_{opr}	-25 to 85	°C
Storage temperature		T_{stg}	-40 to 100	°C
Soldering temperature		T_{sol}	260*3	°C

*1. Refer to the temperature rating chart if the ambient temperature exceeds 25°C.
*2. Pulse width ≤ 10 µs, Repeated 100 Hz
*3. Complete soldering within 10 seconds.

Exterior Specifications

Connecting method	Weight (g)	Material
		Case
Terminal for PCB mounting	0.8	Polycarbonate

Electrical and Optical Characteristics (Ta = 25°C)

Item		Symbol	Value			Unit	Condition
			MIN.	TYP.	MAX.		
Emitter							
	Forward voltage	V_F	—	1.2	1.5	V	I_F = 30 mA
	Reverse current	I_R	—	0.01	10	µA	V_R = 4 V
	Peak emission wavelength	λ_P	—	940	—	nm	I_F = 20 mA
Detector							
	Light current	I_L	0.5	—	14	mA	I_F = 20 mA, V_{CE} = 10 V
	Dark current	I_D	—	2	200	nA	V_{CE} = 10 V, 0 lx
	Leakage current	I_{LEAK}	—	—	—	µA	—
	Collector-Emitter saturated voltage	V_{CE} (sat)	—	0.1	0.4	V	I_F = 20 mA, I_L = 0.1 mA
	Peak spectral sensitivity wavelength	λ_P	—	850	—	nm	V_{CE} = 10 V
Rising time		tr	—	4	—	µs	V_{CC} = 5 V, R_L = 100 Ω I_L = 5 mA
Falling time		tf	—	4	—	µs	V_{CC} = 5 V, R_L = 100 Ω I_L = 5 mA

Engineering Data (Reference Value)

Fig 1. Forward Current vs. Collector Dissipation Temperature Rating

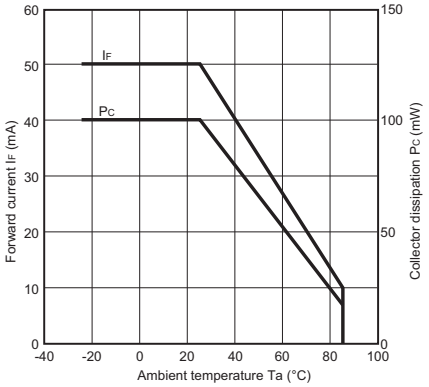

Fig 2. Forward Current vs. Forward Voltage Characteristics (Typical)

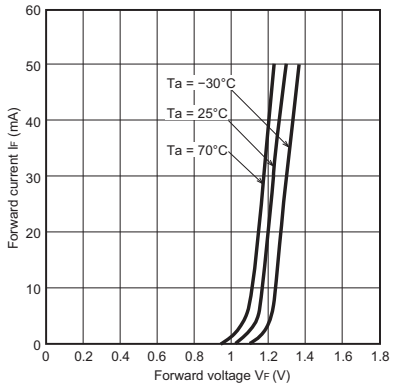

Fig 3. Light Current vs. Forward Current Characteristics (Typical)

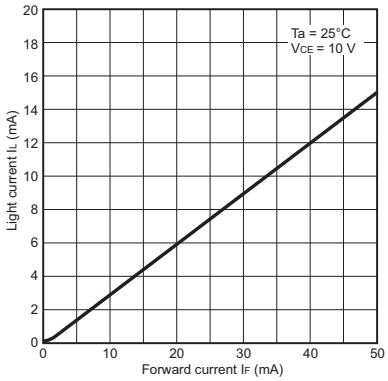

Fig 4. Light Current vs. Collector-Emitter Voltage Characteristics (Typical)

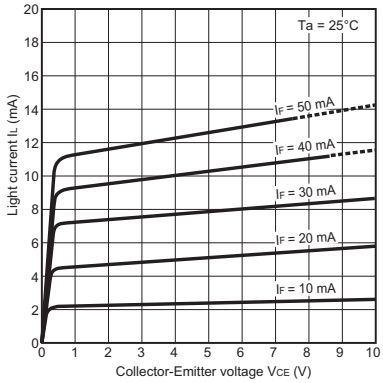

Fig 5. Relative Light Current vs. Ambient Temperature Characteristics (Typical)

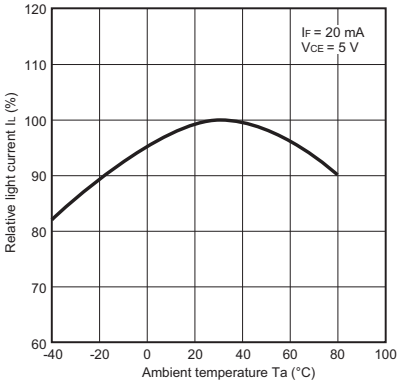

Fig 6. Dark Current vs. Ambient Temperature Characteristics (Typical)

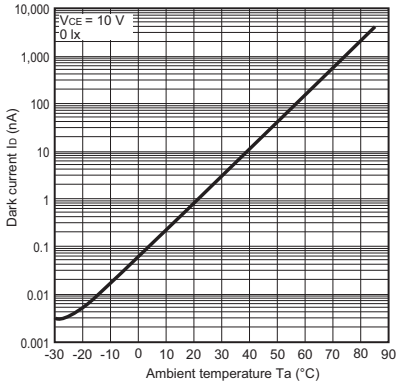

Fig 7. Response Time vs. Load Resistance Characteristics (Typical)

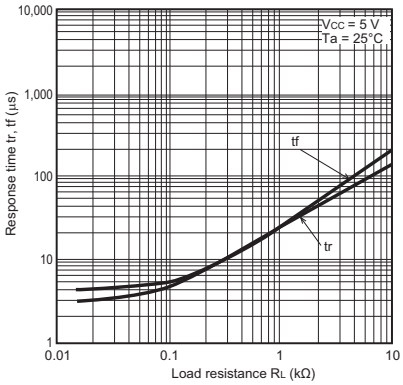

Fig 8. Sensing Position Characteristics (Typical)

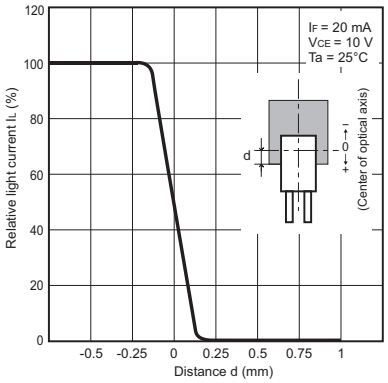

Fig 9. Sensing Position Characteristics (Typical)

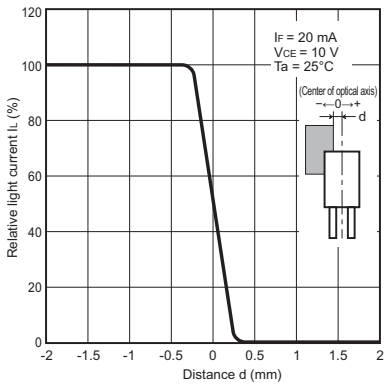

Fig 10. Response Time Measurement Circuit

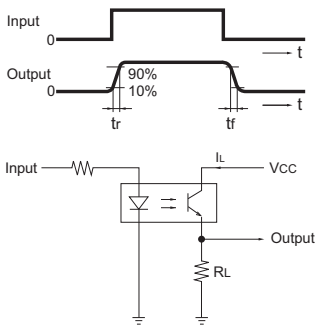

Safety Precautions

To ensure safe operation, be sure to read and follow the Instruction Manual provided with the Sensor.

⚠ CAUTION

This product is not designed or rated for ensuring safety of persons either directly or indirectly.
Do not use it for such purposes.

Precautions for Correct Use

Do not use the product in atmospheres or environments that exceed product ratings.

Precautions for Safe Use

Do not use the product with a voltage or current that exceeds the rated range.

Applying a voltage or current that is higher than the rated range may result in explosion or fire.

Do not miswire such as the polarity of the power supply voltage.

Otherwise the product may be damaged or it may burn.

This product does not resist water. Do not use the product in places where water or oil may be sprayed onto the product.

Dimensions and Internal Circuit

(Unit: mm)

Photomicrosensor

EE-SX153

Aperture size

Emitter	Detector
0.5 × 2.1	0.5 × 2.1

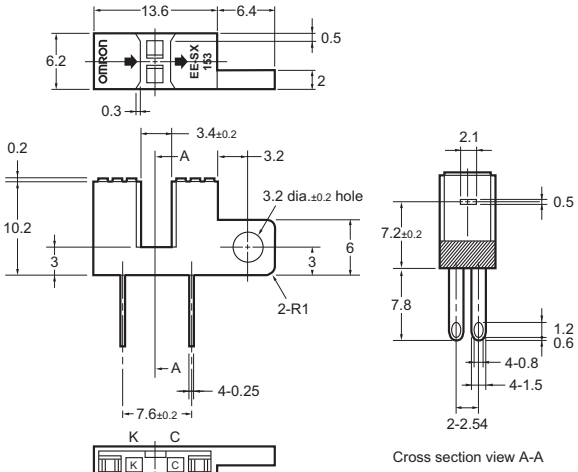

Internal circuit

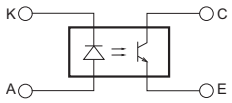

Terminal No.	Name
A	Anode
K	Cathode
C	Collector
E	Emitter

Unless otherwise specified, the tolerances are as shown below.

Dimensions	Tolerance
3 mm max.	±0.3
3 < mm ≤ 6	±0.375
6 < mm ≤ 10	±0.45
10 < mm ≤ 18	±0.55
18 < mm ≤ 30	±0.65

Please check each region's Terms & Conditions by region website.

OMRON Corporation

Electronic and Mechanical Components Company

Regional Contact

Americas
https://www.components.omron.com/

Asia-Pacific
https://ecb.omron.com.sg/

Korea
https://www.omron-ecb.co.kr/

Europe
http://components.omron.eu/

China
https://www.ecb.omron.com.cn/

Japan
https://www.omron.co.jp/ecb/

© OMRON Corporation 2018 All Rights Reserved.
In the interest of product improvement, specifications are subject to change without notice.

Cat. No. E538-E1-01
0318(0318)(O)