ECH450 Series

AC-DC Power Supplies

XP Power

450 Watts

- Force cooled and convection cooled ratings
- Medical and ITE approvals
- Compact 3.0" by 5.0" footprint
- Suitable for BF applications
- 5 V standby and remote on/off
- 12 V fan output
- -20 °C to +70 °C operation
- High efficiency, up to 94%

Approved for medical and ITE applications, this range of forced and convection cooled single output AC/DC power supplies are packaged in an ultra compact foot print of just 5.0" by 3.0".

The ECH450 provides up to 450W force cooled and 250W convection cooled leading to very high power densities of 20W/in³. A 12V, 600 mA fan supply is included in the design to faciliate system cooling, along with 5 V/1 A standby output. The power supply contains two fuses and low leakage currents as required by medical applications.

The ECH450 series is designed to minimize the no load power consumption and maximize efficiency to facilitate equipment design to meet the latest environmental legislation and the low profile and safety approvals covering ITE and medical standards along with conducted emissions to EN55011/32 level B allow the versatile ECH450 series to be used in a vast range of applications.

Dimensions:

ECH450:
3.00 x 5.00 x 1.42" (76.2 x 127.0 x 36.1 mm)

ECH450-TF, ECH450-C:
3.41 x 5.00 x 1.97" (86.6 x 127.0 x 50.0 mm)

ECH450-EF:
3.15 x 5.83 x 1.60" (80.0 x 148.2 x 40.6 mm)

Models & Ratings

Output Voltage	Output Current		Optional Standby Output	Fan Output[2]	Efficiency[1]	Model Number[4]
	Forced cooled	Convection cooled				
12.0 V	37.5A	20.8A	5 V/1.0 A	12 V/0.6 A	93%	ECH450PS12
15.0 V	30.0A	16.6A	5 V/1.0 A	12 V/0.6 A	93%	ECH450PS15
19.0 V	23.7A	13.0A	5 V/1.0 A	12 V/0.6 A	93%	ECH450PS19
24.0 V	18.8A	10.4A	5 V/1.0 A	12 V/0.6 A	94%	ECH450PS24
36.0 V	12.5A	6.9A	5 V/1.0 A	12 V/0.6 A	94%	ECH450PS36
48.0 V	9.4A	5.2A	5 V/1.0 A	12 V/0.6 A	94%	ECH450PS48
54.0 V	8.33A	4.63A	5 V/1.0 A	12 V/0.6 A	94%	ECH450PS54

Notes

1. Typical efficiencies measured at 100% load and 230 VAC input.
2. Typical voltage, actual regulated voltage will be in range of 11.4V to 12.6V.
3. Regulation of the fan output requires a minimum load of 10W on the main output.
4. Add suffix -C to part number for vented cover version, -TF for top fan version and -EF for end fan version.

Input

Characteristic	Minimum	Typical	Maximum	Units	Notes & Conditions
Input Voltage - Operating	90	115/230	264	VAC	Derate output from 100% at 100 VAC to 90% at 90 VAC
Input Frequency	47	50/60	63	Hz	
Power Factor		>0.9			230 VAC, 100% load. EN61000-3-2 class A, class C >175W
Input Current - Full Load		4.5/2.3		A	115/230 VAC
Inrush Current			120	A	230 VAC cold start, 25 °C
Earth Leakage Current		80/135	250	µA	115/230 VAC/50 Hz (Typ), 264 VAC/60 Hz (Max)
No load Input Power			0.21	W	When main output is Inhibited
Input Protection	F8A/250 V Internal fuse fitted in line and neutral.				

Output - Main Output

Characteristic	Minimum	Typical	Maximum	Units	Notes & Conditions
Output Voltage - V1	12		54	VDC	See Models and Ratings table
Initial Set Accuracy			±1	%	50% load, 115/230 VAC
Minimum Load	0			A	No minimum load required
Start Up Delay			2	s	115/230 VAC full load.
Hold Up Time	10			ms	Min at full load, 115 VAC.
Drift			±0.02	%	After 20 min warm up
Line Regulation			±0.5	%	90-264 VAC
Load Regulation			±1	%	0-100% load.
Transient Response			4	%	Recovery within 1% in less than 500 µs for a 50-75% and 75-50% load step
Over/Undershoot		2	5	%	Full load
Ripple & Noise			2	% pk-pk	20 MHz bandwidth and 47 µF electrolytic capacitor in parallel with 0.1 µF ceramic capacitor.
Overvoltage Protection	110		130	%	Vnom, recycle input to reset
Overload Protection	110		130	% I nom	
Short Circuit Protection					Trip & Restart
Temperature Coefficient			0.02	%/°C	
Overtemperature Protection					Measured internally, Auto Resetting
Output Leakage Current			50	µA	264 VAC / 60 Hz

Output - 5 V Standby Output

Characteristic	Minimum	Typical	Maximum	Units	Notes & Conditions
Output Voltage		5.0		VDC	
Initial Set Accuracy			±1	%	50% load, 115/230 VAC
Minimum Load	0			A	
Start Up Delay			0.5	s	115/230 VAC full load.
Hold Up Time	500			ms	Min at full load, 115 VAC.
Drift			±0.02	%	After 20 min warm up
Line Regulation			±0.5	%	90-264 VAC
Load Regulation			1.5	%	0-100% load.
Transient Response			4	%	Recovery within 1% in less than 500 µs for a 50-75% and 75-50% load step
Over/Undershoot			5	%	Full load
Ripple & Noise			2	% pk-pk	20 MHz bandwidth and 47 µF electrolytic capacitor in parallel with 0.1 µF ceramic capacitor
Overload Protection			2.0	A	
Short Circuit Protection					Trip & Restart
Temperature Coefficient			0.02	%/°C	
Remote On/Off	See Application Note				

General

Characteristic	Minimum	Typical	Maximum	Units	Notes & Conditions
Efficiency		93/94		%	230 VAC Full load (see fig. 1 to 4)
Isolation: Input to Output	4000			VAC	2x MOPP
Input to Ground	1500			VAC	1x MOPP
Output to Ground	1500			VAC	1x MOPP
Switching Frequency		70		kHz	PFC, Fixed
	82		185	kHz	Main converter, Variable
	22		85	kHz	For 5V standby output, Variable
Power Density			21	W/in³	
Mean Time Between Failure		300		kHrs	MIL-HDBK-217F, Notice 2 +25 °C GB
Weight		0.86 (390)		lb(g)	Open frame
		1.26 (570)			-C version
		1.29 (585)			-TF version
		1.46 (660)			-EF version

Efficiency Vs Load

Figure 1 - ECH450PS12 (250W)

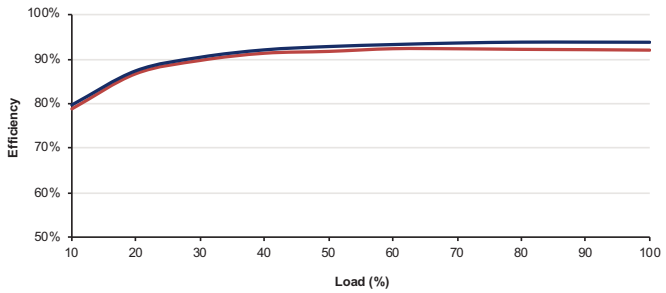

Figure 2 - ECH450PS12 (450W)

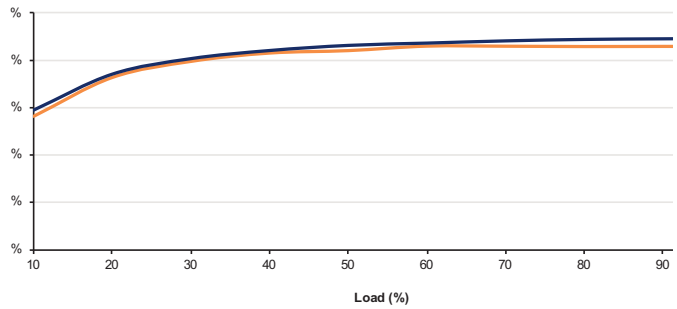

Figure 3 - ECH450PS24 (250W)

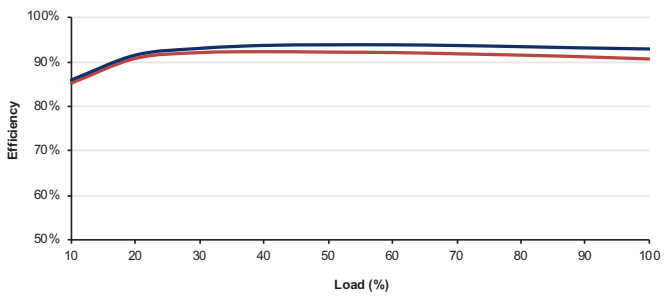

Figure 4 - ECH450PS24 (450W)

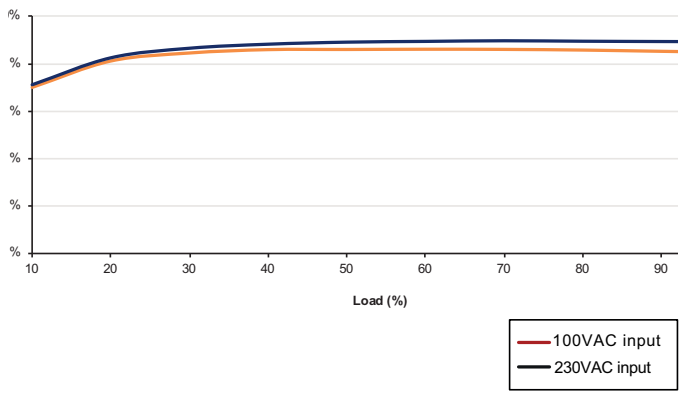

Environmental

Characteristic	Minimum	Typical	Maximum	Units	Notes & Conditions
Operating Temperature	-20		+70	°C	See derating curve, figure 5. Safety approved to 50°C
Storage Temperature	-40		+85	°C	
Cooling	13.8			CFM	Forced-cooled > 250W
Humidity	5		95	%RH	Non-condensing
Operating Altitude			5000/4000	m	ITE/Medical
Shock	±3 x 30g shocks in each plane, total 18 shocks. 30g = 11ms (+/- 0.5msecs), half sine. Conforms to EN60068-2-27				
Vibration	Single axis 10-500 Hz at 2g sweep and endurance at resonance in all 3 planes. Conforms to EN60068-2-6				

Temperature Derating Curves

Figure 5

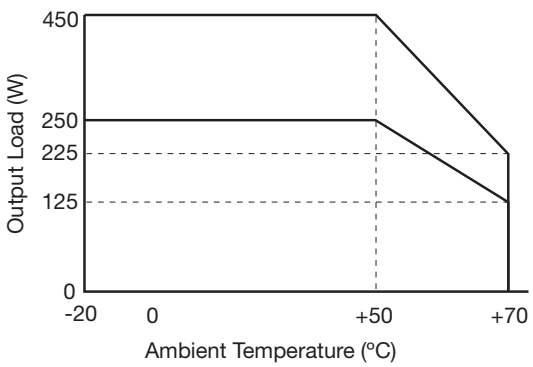

EMC: Emissions

Phenomenon	Standard	Test Level	Criteria	Notes & Conditions
Conducted	EN55011/32	Class B		
Radiated	EN55011/32	Class B		
Harmonic Current	EN61000-3-2	Class A		Class C for load >175 W
Voltage Functions	EN61000-3-3			

EMC: Immunity

Phenomenon	Standard	Test Level	Criteria	Notes & Conditions
Medical Device EMC	IEC60601-1-2	Ed.4.0 : 2014	as below	
Low Voltage PSU EMC	EN61204-3	High severity level	as below	
ESD	EN61000-4-2	4	A	±8kV contact, ±15kV air
Radiated	EN61000-4-3	3	A	
EFT	EN61000-4-4	3	A	
Surges	EN61000-4-5	Installation class 3	A	
Conducted	EN61000-4-6	3	A	
Magnetic Fields	EN61000-4-8	4	A	
Dips and Interruptions	EN55035 (100 VAC)	Dip >95% (0 VAC), 8.3 ms	A	
		Dip 30% (70 VAC), 416 ms	B	
		Dip >95% (0 VAC), 4160 ms	B	
	EN55035 (240 VAC)	Dip >95% (0 VAC), 10.0 ms	A	
		Dip 30% (168 VAC), 500 ms	A	
		Dip >95% (0 VAC), 5000 ms	B	
	EN60601-1-2 (100 VAC)	Dip 100% (0 VAC), 10.0 ms	A	
		Dip 100% (0 VAC), 20 ms	B	
		Dip 60% (40 VAC), 100 ms	B	
		Dip 30% (70 VAC), 500 ms	B	
		Dip 100% (0 VAC), 5000 ms	B	
	EN60601-1-2 (240 VAC)	Dip 100% (0 VAC), 10.0 ms	A	
		Dip 100% (0 VAC), 20 ms	B	
		Dip 60% (96 VAC), 100 ms	A	
		Dip 30% (168 VAC), 500 ms	A	
		Dip 100% (0 VAC), 5000 ms	B	

Safety Approvals

Safety Agency	Safety Standard	Notes & Conditions
CB Report	IEC62368	Information Technology
	IEC60601-1 Ed 3.1 Including Risk Management	Medical
UL	UL62368-1	Information Technology
	ANSI/AAMI ES60601-1 & CSA C22.2 No.60601-1:08	Medical
EN	EN62368-1	Information Technology
	EN60601-1	Medical
CE	Meets all applicable directives	
UKCA	Meets all applicable legislation	

Isolation	Level	Notes & Conditions
Primary to Secondary	2 x MOPP (Means of Patient Protection)	IEC60601-1 Ed 3.1
Primary to Earth	1 x MOPP (Means of Patient Protection)	
Secondary to Earth	1 x MOPP (Means of Patient Protection)	

Mechanical Details

Standard Open Frame 12-24V

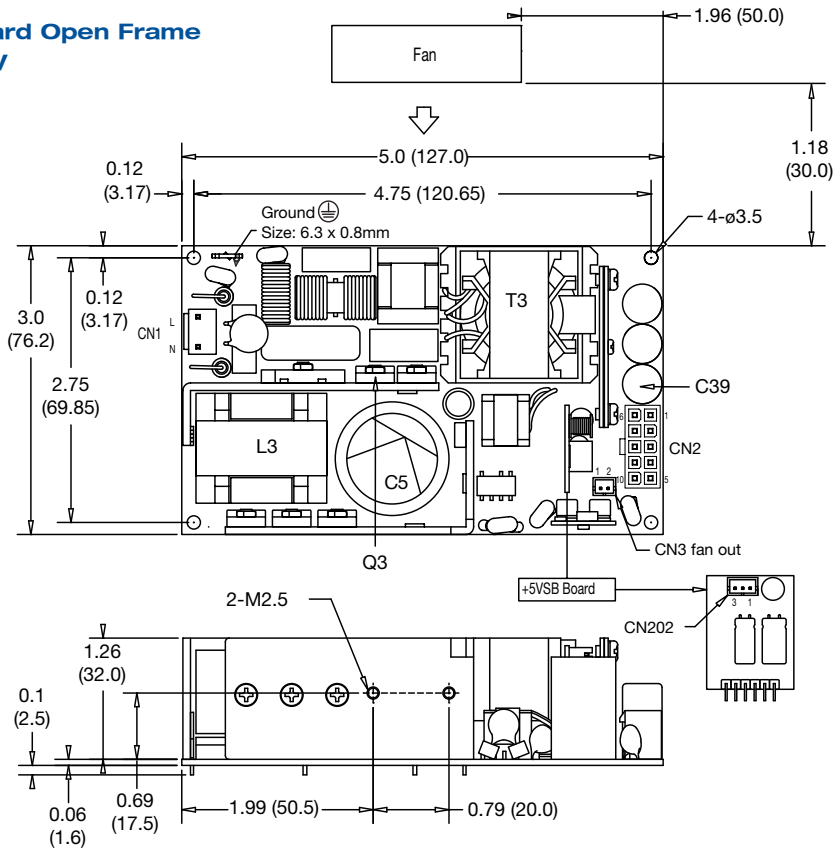

CN1 - Input Connector	
Pin 1	Neutral
Pin 2	No Pin
Pin 3	Live

Mates with JST housing VHR-3N

CN2 - Output Connector	
Pin 1	+Vout
Pin 2	+Vout
Pin 3	+Vout
Pin 4	-Vout
Pin 5	-Vout
Pin 6	+Vout
Pin 7	+Vout
Pin 8	-Vout
Pin 9	-Vout
Pin 10	-Vout

Mates with Molex 39-01-2100

CN3 - Fan Connector	
Pin 1	Fan+
Pin 2	Fan-

Mates with JST housing PHR-2

CN202 - Signal Connector	
Pin 1	+5V Standby
Pin 2	Return
Pin 3	Remote On/Off

Mates with JST housing PHR-3

Notes

1. All dimensions shown in inches (mm). Tolerance: ±0.02 (0.5)
2. Weight: 0.86lbs (390g) approx.

36-54V

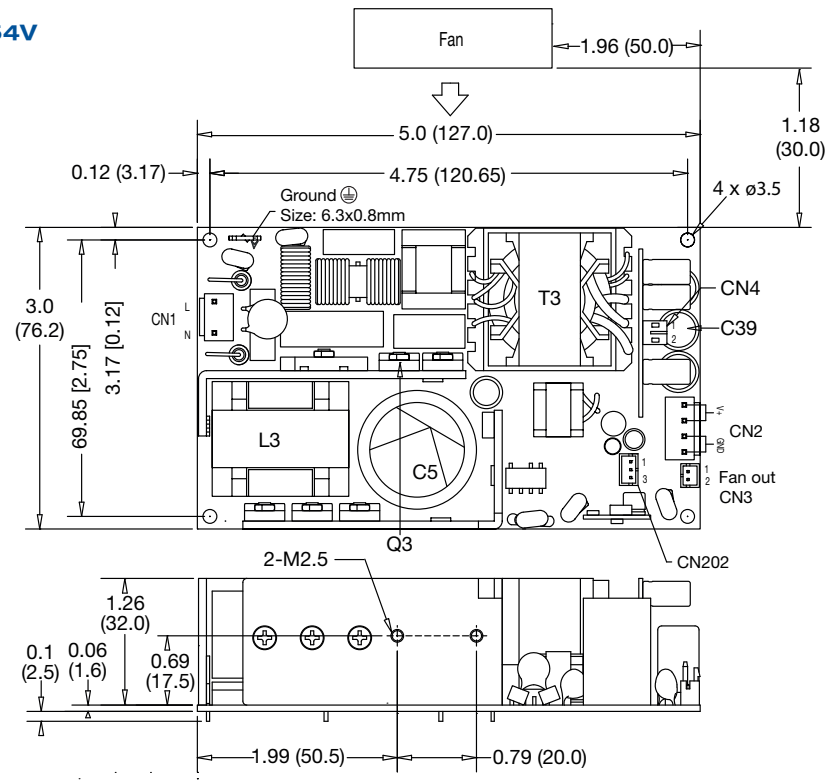

CN1 - Input Connector	
Pin 1	Neutral
Pin 2	No Pin
Pin 3	Live

Mates with JST housing VHR-3N

CN2 - Output Connector	
Pin 1	+Vout
Pin 2	+Vout
Pin 3	-Vout
Pin 4	-Vout

Mates with JST housing VHR-4N

CN3 - Fan Connector	
Pin 1	Fan+
Pin 2	Fan-

Mates with JST housing PHR-2

CN202 - Signal Connector	
Pin 1	+5V Standby
Pin 2	Return
Pin 3	Remote On/Off

Mates with JST housing PHR-3

CN4 - Remote Sense	
Pin 1	+Sense
Pin 2	-Sense

Mates with JST housing PHR-2

Notes

1. All dimensions shown in inches (mm). Tolerance: ±0.02 (0.5)
2. Weight: 0.86lbs (390g) approx.

Mechanical Details

End Fan Version (-EF) 12-24V

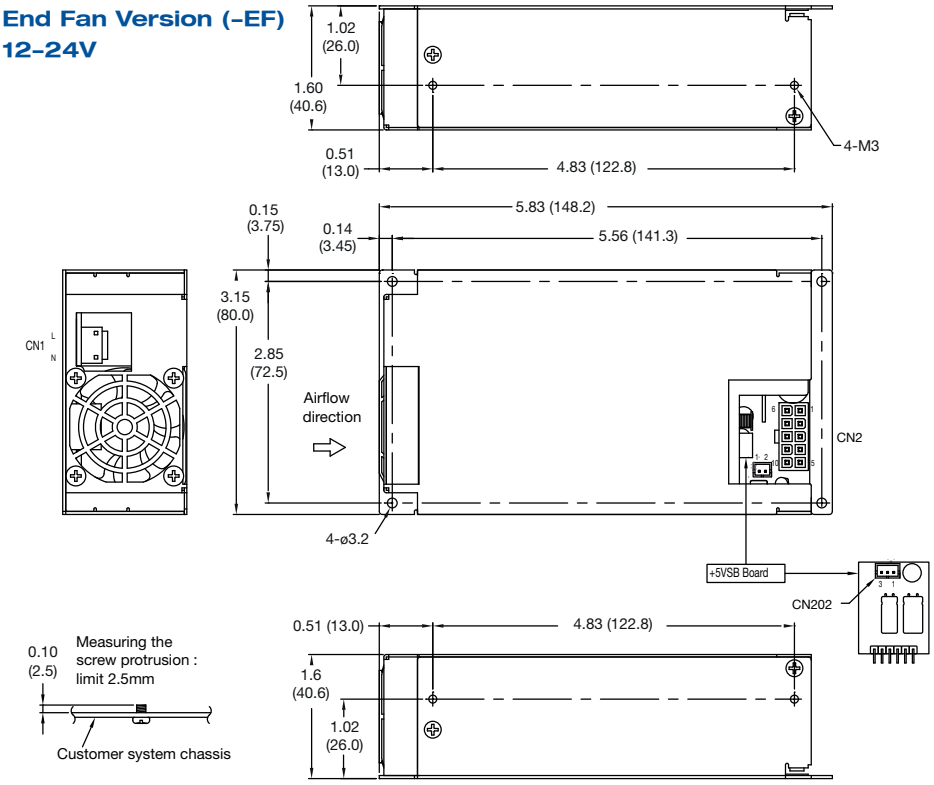

CN1 - Input Connector	
Pin 1	Neutral
Pin 2	No Pin
Pin 3	Live

Mates with JST housing VHR-3N

CN2 - Output Connector	
Pin 1	+Vout
Pin 2	+Vout
Pin 3	+Vout
Pin 4	-Vout
Pin 5	-Vout
Pin 6	+Vout
Pin 7	+Vout
Pin 8	-Vout
Pin 9	-Vout
Pin 10	-Vout

Mates with Molex 39.01-2100

CN202 - Signal Connector	
Pin 1	+5V Standby
Pin 2	Return
Pin 3	Remote On/Off

Mates with JST housing PHR-3

Notes

1. All dimensions shown in inches (mm).
   Tolerance: ±0.02 (0.5)
2. Weight: 1.46lbs (660g) approx.

36-54V

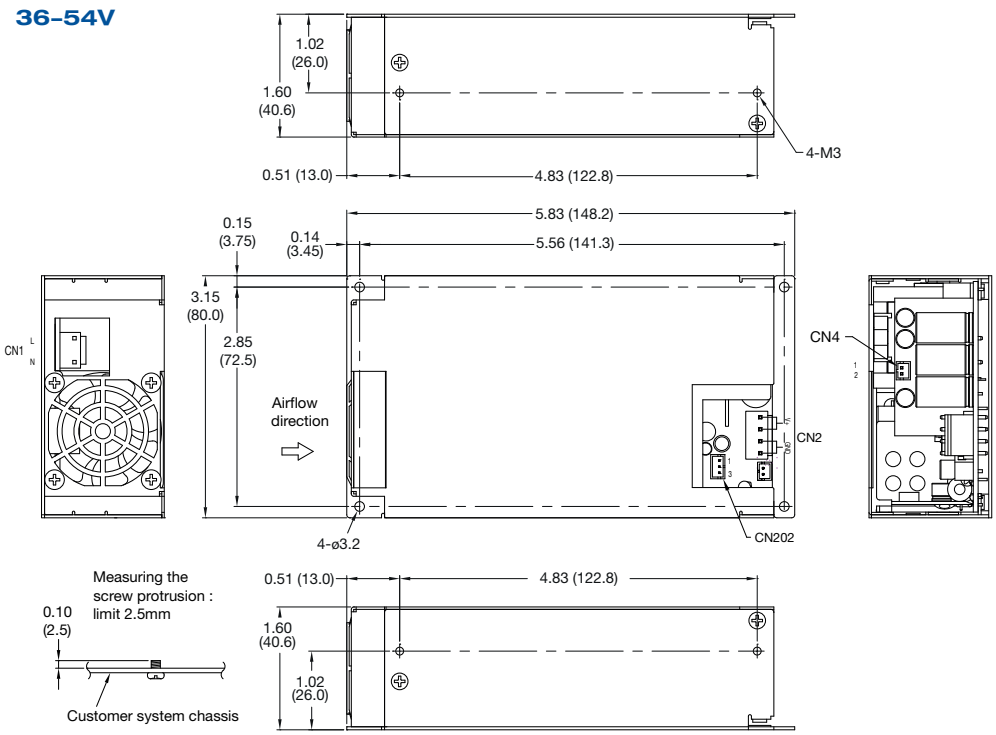

CN1 - Input Connector	
Pin 1	Neutral
Pin 2	No Pin
Pin 3	Live

Mates with JST housing VHR-3N

CN2 - Output Connector	
Pin 1	+Vout
Pin 2	+Vout
Pin 3	-Vout
Pin 4	-Vout

Mates with JST housing VHR-4N

CN202 - Signal Connector	
Pin 1	+5V Standby
Pin 2	Return
Pin 3	Remote On/Off

Mates with JST housing PHR-3

CN4 - Remote Sense	
Pin 1	+Sense
Pin 2	-Sense

Mates with JST housing PHR-2

Notes

1. All dimensions shown in inches (mm).
   Tolerance: ±0.02 (0.5)
2. Weight: 01.46lbs (660g) approx.

Mechanical Details

Covered Version (-C) 12-24V

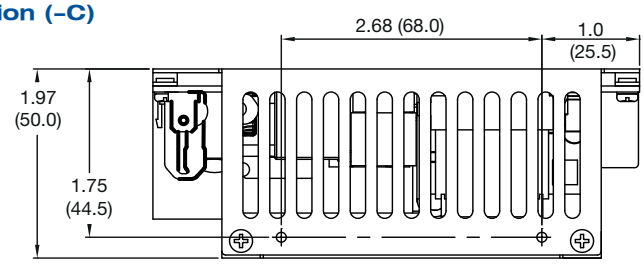

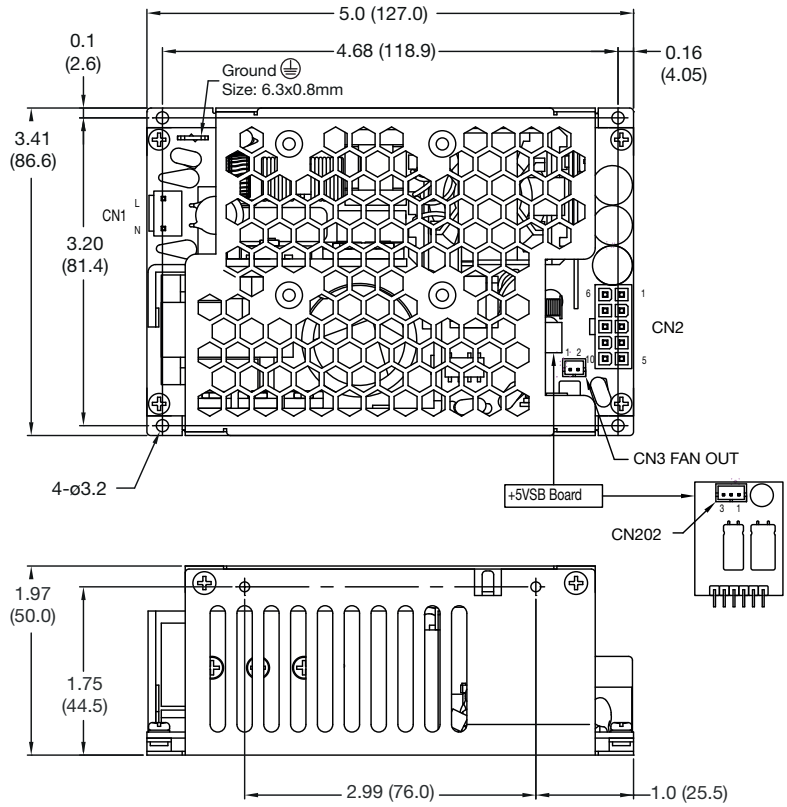

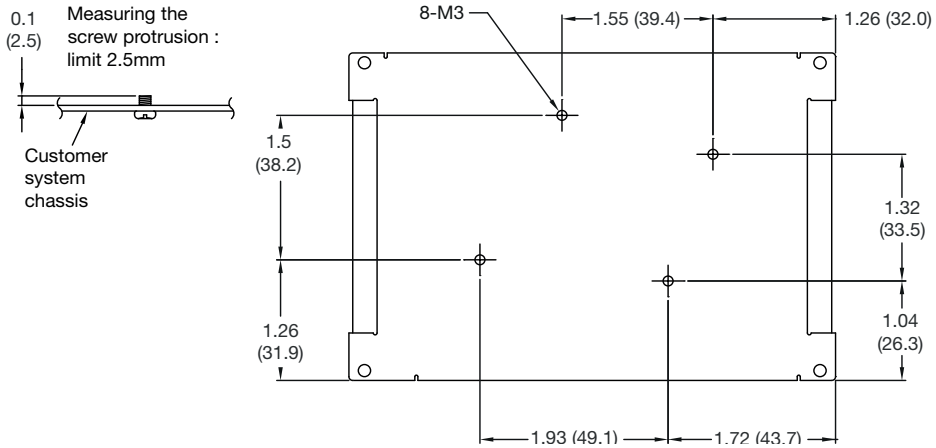

CN1 - Input Connector	
Pin 1	Neutral
Pin 2	No Pin
Pin 3	Live

Mates with JST housing VHR-3N

CN2 - Output Connector	
Pin 1	+Vout
Pin 2	+Vout
Pin 3	+Vout
Pin 4	-Vout
Pin 5	-Vout
Pin 6	+Vout
Pin 7	+Vout
Pin 8	-Vout
Pin 9	-Vout
Pin 10	-Vout

Mates with Molex 39.01-2100

CN3 - Fan Connector	
Pin 1	Fan+
Pin 2	Fan-

Mates with JST housing PHR-2

CN202 - Signal Connector	
Pin 1	+5V Standby
Pin 2	Return
Pin 3	Remote On/Off

Mates with JST housing PHR-3

Notes

1. All dimensions shown in inches (mm). Tolerance: ±0.02 (0.5)
2. Weight: 1.26lbs (570g) approx.

Mechanical Details

Covered Version (–C) 36–54V

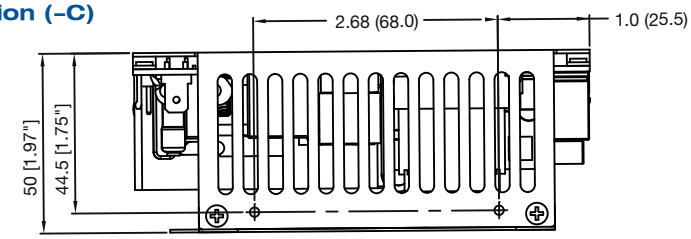

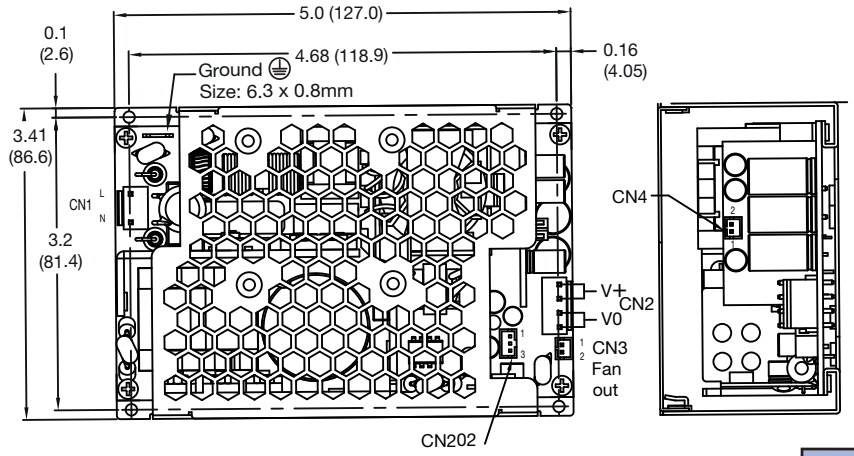

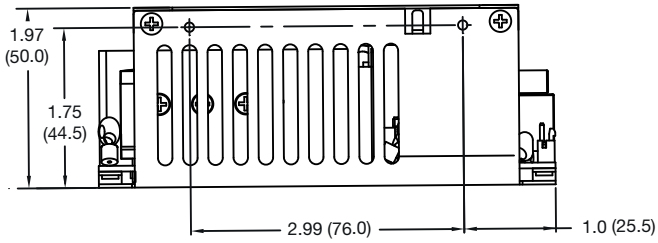

Measuring the screw protrusion : limit 2.5mm

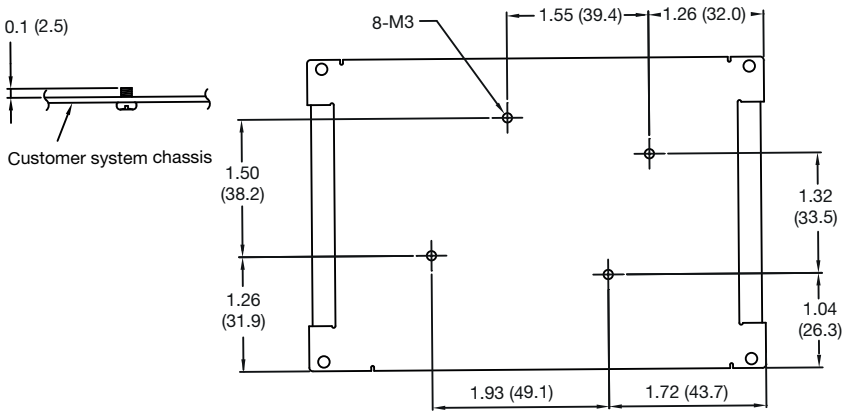

CN1 - Input Connector	
Pin 1	Neutral
Pin 2	No Pin
Pin 3	Live

Mates with JST housing VHR-3N

CN2 - Output Connector	
Pin 1	+Vout
Pin 2	+Vout
Pin 3	-Vout
Pin 4	-Vout

Mates with JST housing VHR-4N

CN3 - Fan Connector	
Pin 1	Fan+
Pin 2	Fan-

Mates with JST housing PHR-2

CN202 - Signal Connector	
Pin 1	+5V Standby
Pin 2	Return
Pin 3	Remote On/Off

Mates with JST housing PHR-3

CN4 - Remote Sense	
Pin 1	+Sense
Pin 2	-Sense

Mates with JST housing PHR-2

Notes

1. All dimensions shown in inches (mm).
   Tolerance: ±0.02 (0.5)
2. Weight: 1.26lbs (570g) approx.

Mechanical Details

Top Fan Version (TF) 12–24V

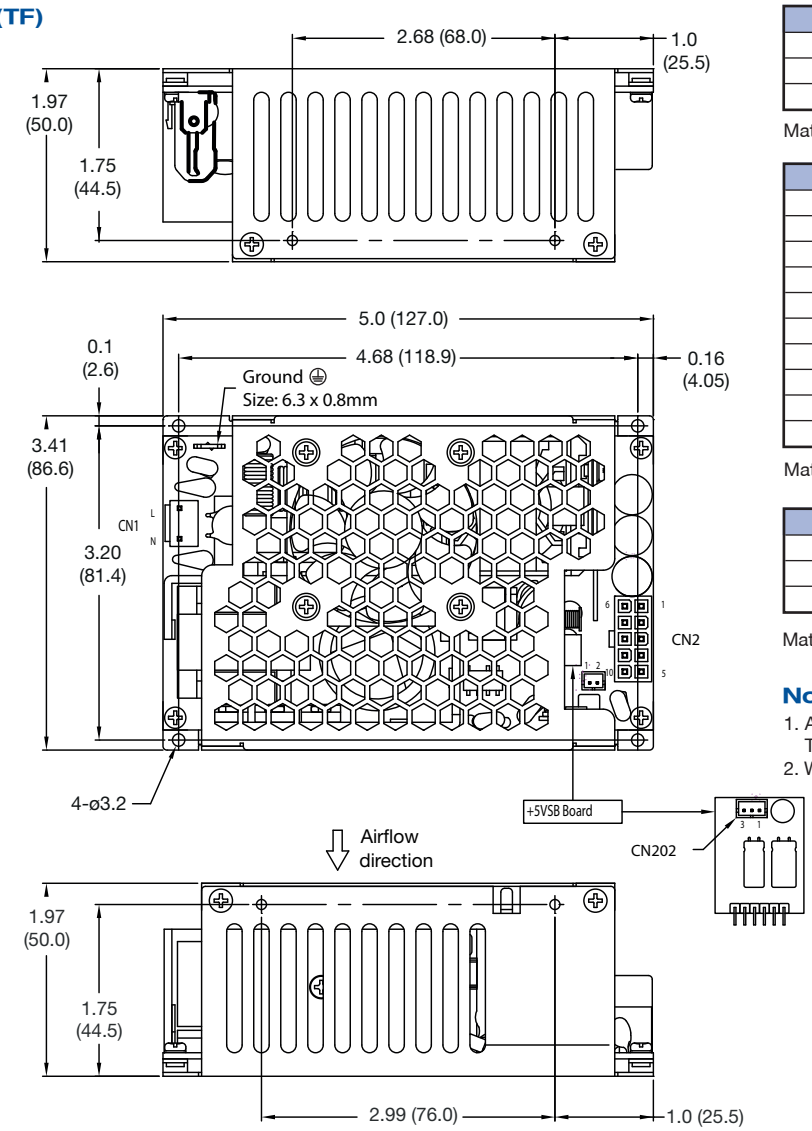

CN1 - Input Connector	
Pin 1	Neutral
Pin 2	No Pin
Pin 3	Live

Mates with JST housing VHR-3N

CN2 - Output Connector	
Pin 1	+Vout
Pin 2	+Vout
Pin 3	+Vout
Pin 4	-Vout
Pin 5	-Vout
Pin 6	+Vout
Pin 7	+Vout
Pin 8	-Vout
Pin 9	-Vout
Pin 10	-Vout

Mates with Molex 39.01-2100

CN202 - Signal Connector	
Pin 1	+5V Standby
Pin 2	Return
Pin 3	Remote On/Off

Mates with JST housing PHR-3

Notes

1. All dimensions shown in inches (mm). Tolerance: ±0.02 (0.5)
2. Weight: 1.29lbs (585g) approx.

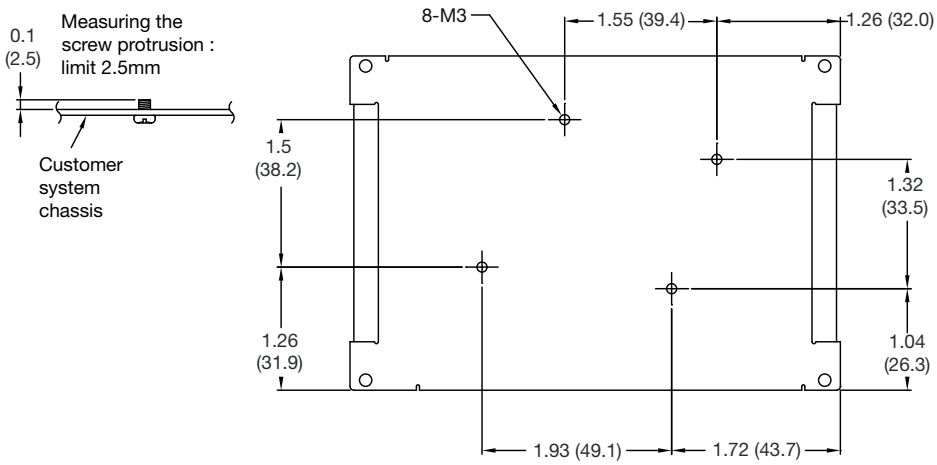

Mechanical Details

Top Fan Version (TF)
36–54V

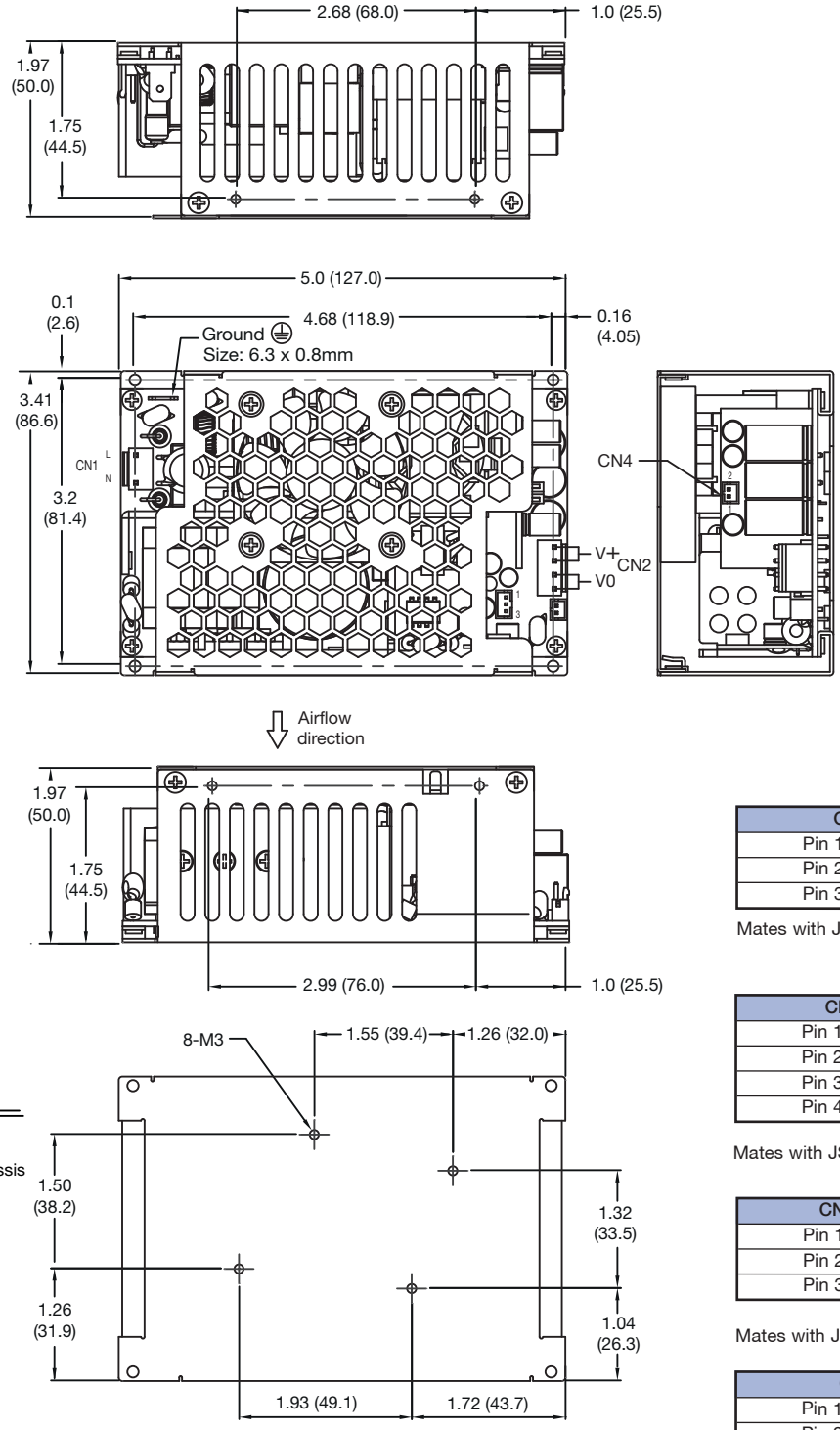

CN1 - Input Connector	
Pin 1	Neutral
Pin 2	No Pin
Pin 3	Live

Mates with JST housing VHR-3N

CN2 - Output Connector	
Pin 1	+Vout
Pin 2	+Vout
Pin 3	-Vout
Pin 4	-Vout

Mates with JST housing VHR-4N

CN202 - Signal Connector	
Pin 1	+5V Standby
Pin 2	Return
Pin 3	Remote On/Off

Mates with JST housing PHR-3

CN4 - Remote Sense	
Pin 1	+Sense
Pin 2	-Sense

Mates with JST housing PHR-2

Notes

1. All dimensions shown in inches (mm).
   Tolerance: ±0.02 (0.5)
2. Weight: 1.29lbs (585g) approx.

Thermal Considerations

In order to ensure safe operation of the PSU in the end-use equipment, the temperature of the components listed in the table below must not be exceeded. Temperature should be monitored using K type thermocouples placed on the hottest part of the component (out of direct air flow). See Standard Open Frame Mechanical Details on page 5 for component locations.

Temperature Measurements (At Maximum Ambient)	
Component	Max Temperature °C
T3 Coil	110°C
L3 Coil	120°C
Q3 Body	120°C
C5	105°C
C39	105°C

Service Life

The estimated service life of the ECH450 is determined by the cooling arrangements and load conditions experienced in the end application. Due to the uncertain nature of the end application this estimated service life is based on the actual measured temperature of a key capacitor with in the product when installed by the end application,

The graph below expresses the estimated lifetime of a given component temperature and assumes continuous operation at this temperature.

Estimated Service Life vs Component Temperature

Figure 6

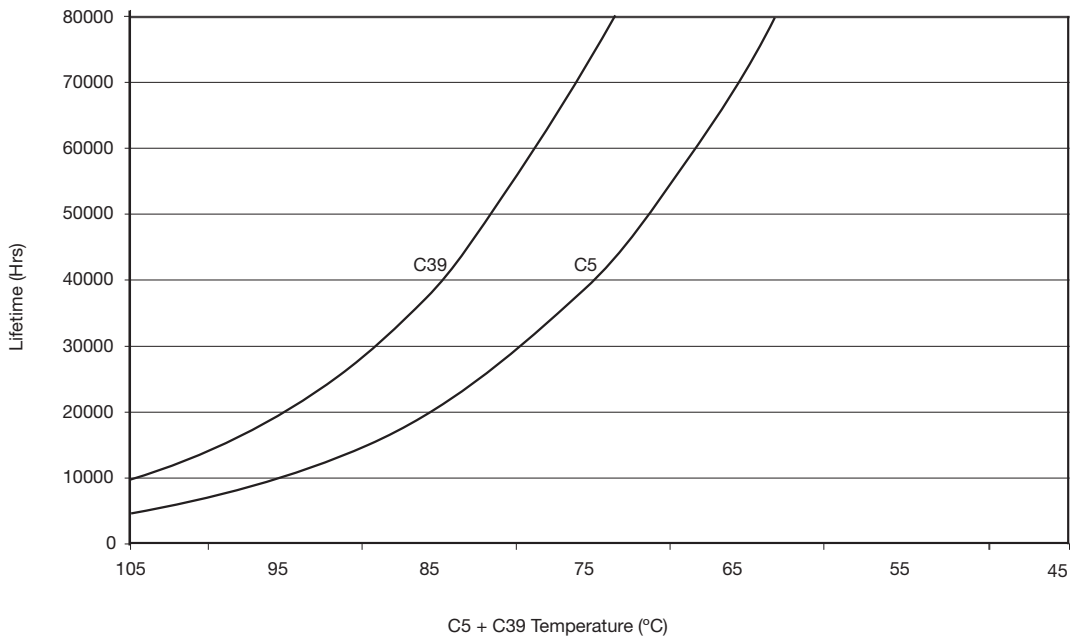

Remote On/Off

CN202 - Signal Connection	
Pin 1	+5 V standby
Pin 2	Return
Pin 3	Remote On/Off

To turn output off, connect Remote On/Off, Pin 3 to return, Pin 2. Output is on if Remote On/Off, Pin 3 is floating or connected to 5V standby, Pin 1.