REV.	ECN NO.	DATE	SIGN	DESCRIPTION
A		2022/09/30	Eagle	Rev.01 to Rev.A

DT-HCN-XXRMM-RHA30

G3:3Pin
G4:4Pin
G6:6Pin
08:8Pin
12:12Pin

For 12P

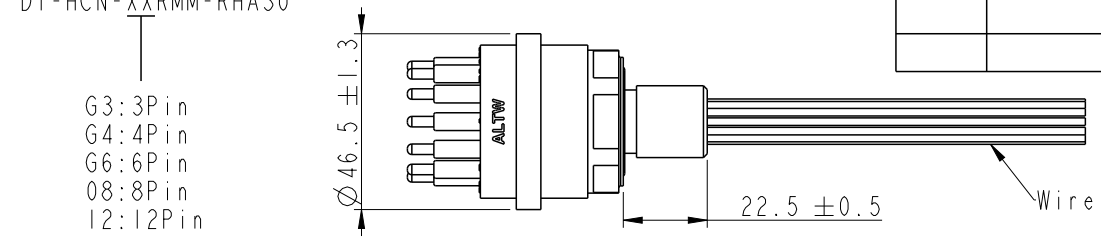

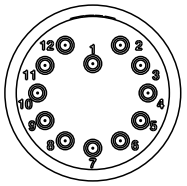

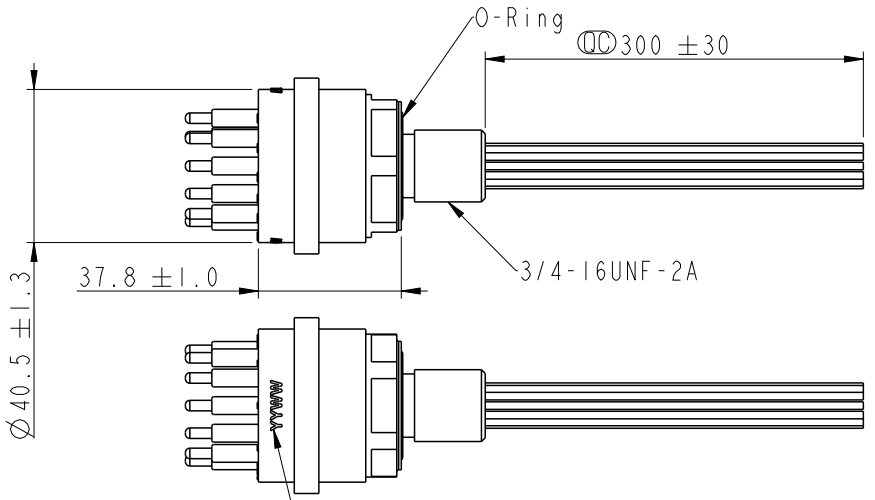

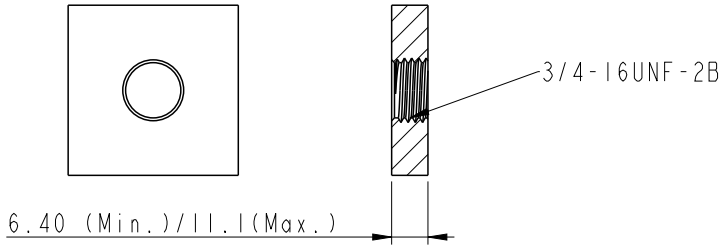

Panel cut out (screw type)

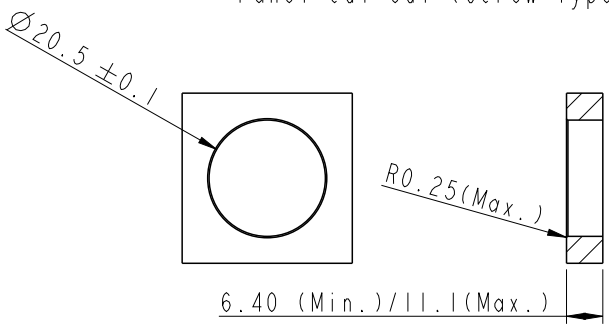

Panel cut out (hole type)

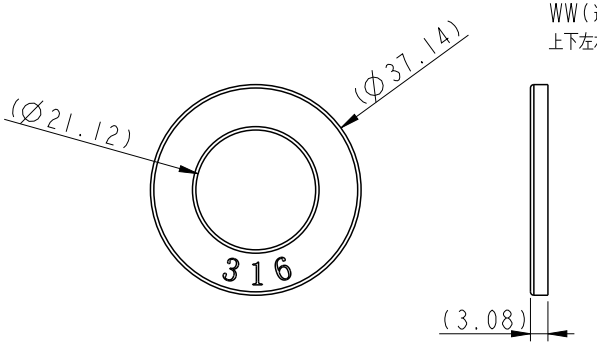

Washer

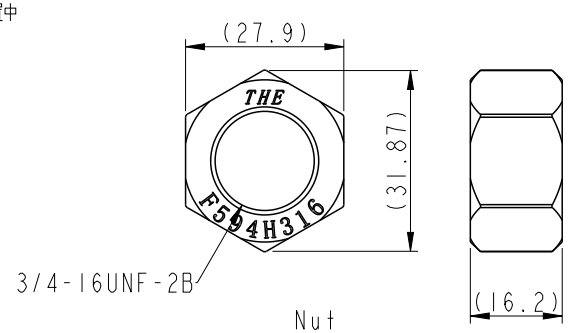

Nut

Note:
* QC Important Dimension.
* Waterproof Rate: Hadopelagic 7000M, Mated.
* Connector
  Housing : Rubber, Black.
  Pin : Copper Alloy, Gold Plated.
  O-Ring: Rubber, Black.
  Shield: Metal.
  Nut: Metal.
  Washer: Metal.
* Wire: UL10393 18 AWG, OD 1.81mm
* Washer and nut are packed separately in PE bag.

UNIT:mm

TOLERANCE ±0.5

TITLE: DT, HAD CIRCULAR MINI REAR FASTENED, M, M			
SCALE 1:1	SIZE A4	SHEET 1 OF 5	
REV. A	WC-REV. A.5	QC:Inspection item	

Amphenol LTW
安費諾亮泰企業股份有限公司

ITEM NO	DRAWN BY Eagle	DATE 2022/09/30
DWG NO DT-HCN-XXRMM-RHA30	CHECKED BY Aric	DATE 2022/09/30
CUSTOMER ALTW	APPROVED BY Max	DATE 2022/09/30

W10814-03-RM01A2

THIS DOCUMENT IS SUBJECT TO CHANGE WITHOUT NOTICE. IT IS CONFIDENTIAL AND A PROPERTY OF Amphenol LTW. DISCLOSURE TO THIRD PARTY HAS TO BE AUTHORIZED BY Amphenol LTW.

For 6P/8P

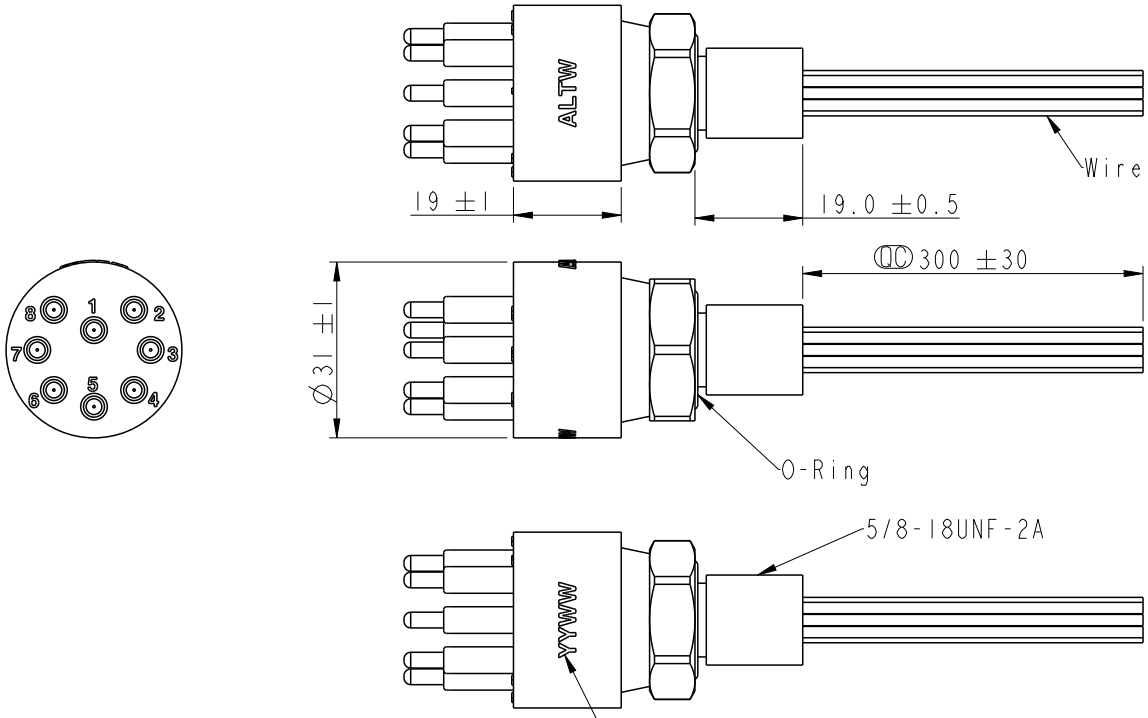

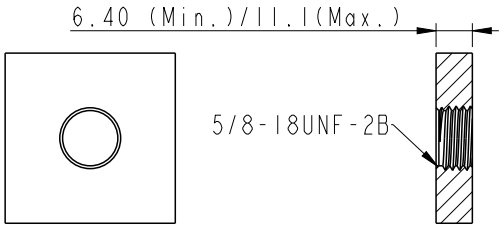

Panel cut out (screw type)

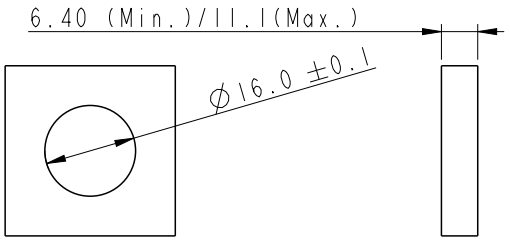

Panel cut out (hole type)

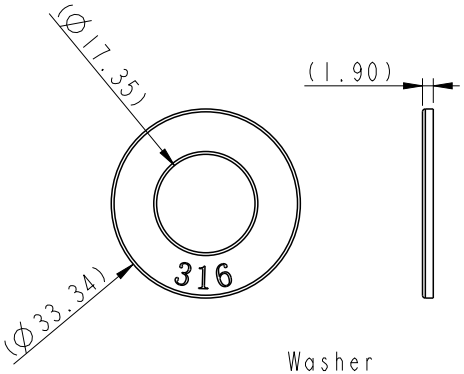

Washer

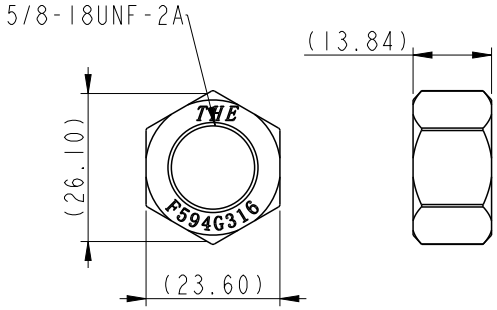

Nut

UNIT: mm	TITLE: DT, HAD CIRCULAR MINI REAR FASTENED, M, M			ITEM NO	DRAWN BY: Eagle	DATE: 2022/09/30
TOLERANCE ±0.5	SCALE: 1:1	SIZE: A4	SHEET 2 OF 5	DWG NO: DT-HCN-XXRMM-RHA30	CHECKED BY: Aric	DATE: 2022/09/30
	REV.: A	WC-REV.: A.5	QC: Inspection item	CUSTOMER: ALTW	APPROVED BY: Max	DATE: 2022/09/30

Amphenol LTW
安費諾亮泰企業股份有限公司

THIS DOCUMENT IS SUBJECT TO CHANGE WITHOUT NOTICE. IT IS CONFIDENTIAL AND A PROPERTY OF Amphenol LTW. DISCLOSURE TO THIRD PARTY HAS TO BE AUTHORIZED BY Amphenol LTW.

For 3P/4P

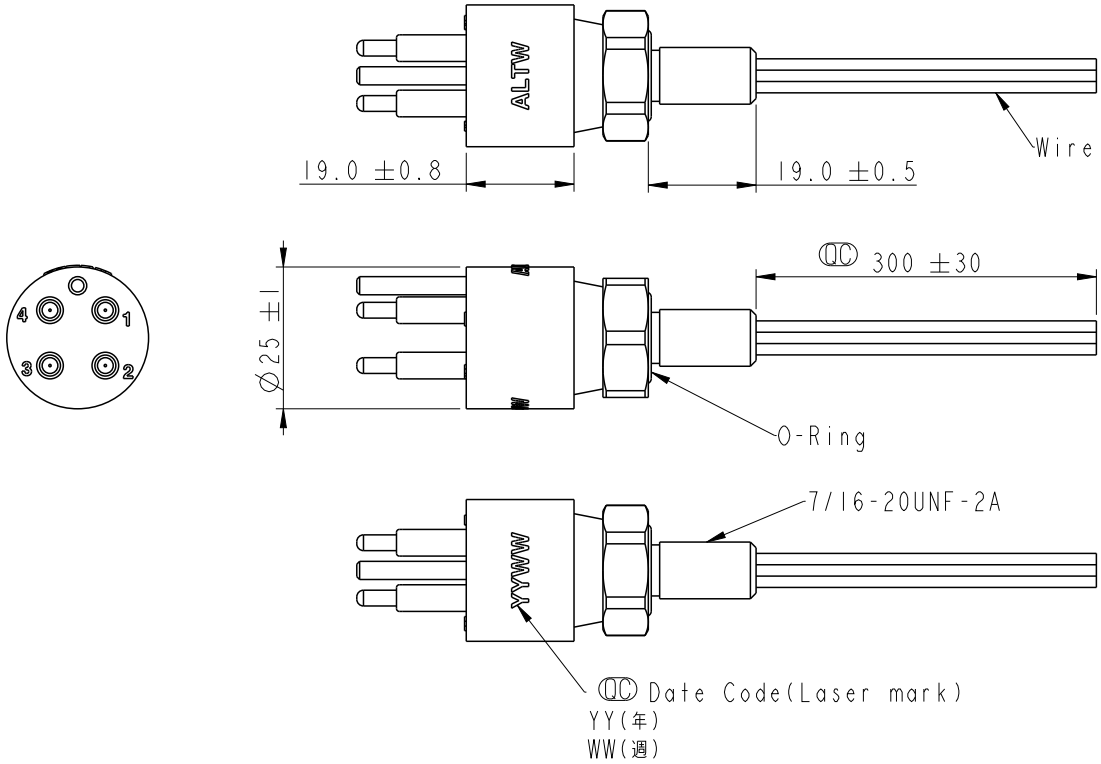

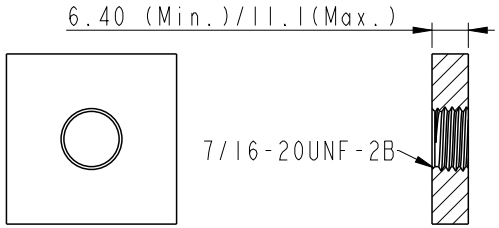

Panel cut out (screw type)

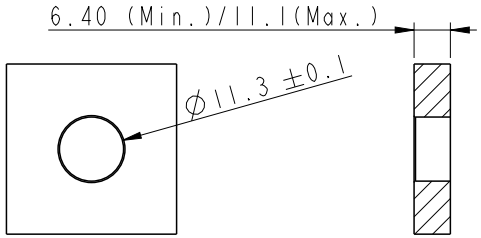

Panel cut out (hole type)

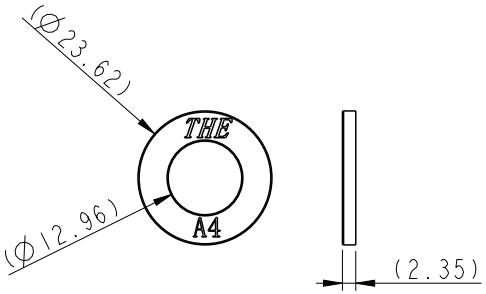

Washer

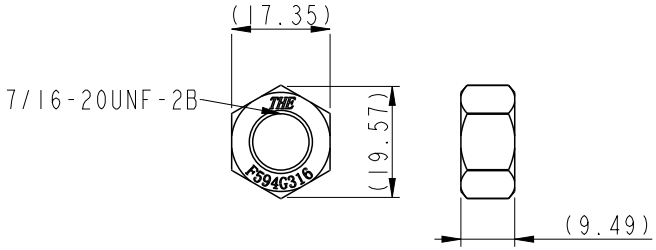

Nut

UNIT: mm	TITLE: DT, HAD CIRCULAR MINI REAR FASTENED, M, M			ITEM NO	DRAWN BY: Eagle	DATE: 2022/09/30
TOLERANCE ±0.5				DWG NO: DT-HCN-XXRMM-RHA30	CHECKED BY: Aric	DATE: 2022/09/30
	SCALE: 1:1	SIZE: A4	SHEET 3 OF 5	CUSTOMER: ALTW	APPROVED BY: Max	DATE: 2022/09/30
	REV.: A	WC-REV.: A.5	QC: Inspection item			

Amphenol LTW

安費諾亮泰企業股份有限公司

THIS DOCUMENT IS SUBJECT TO CHANGE WITHOUT NOTICE. IT IS CONFIDENTIAL AND A PROPERTY OF Amphenol LTW. DISCLOSURE TO THIRD PARTY HAS TO BE AUTHORIZED BY Amphenol LTW.

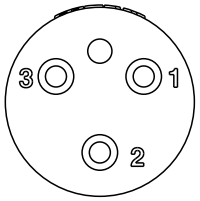

Pin Assignment(Front View)

Pin Out (3P)
1 Black(黑) 18AWG
2 White(白) 18AWG
3 Red(紅) 18AWG

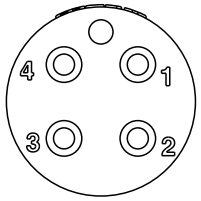

Pin Assignment(Front View)

Pin Out (4P)
1 Black(黑) 18AWG
2 White(白) 18AWG
3 Red(紅) 18AWG
4 Green(綠) 18AWG

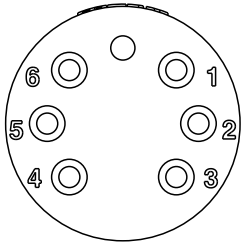

Pin Assignment(Front View)

Pin Out (6P)
1 Black(黑) 18AWG
2 White(白) 18AWG
3 Red(紅) 18AWG
4 Green(綠) 18AWG
5 Orange(橙) 18AWG
6 Blue(藍) 18AWG

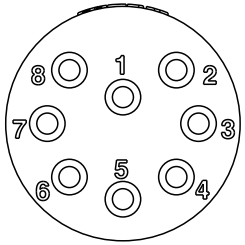

Pin Assignment(Front View)

Pin Out (8P)
1 Black(黑) 18AWG
2 White(白) 18AWG
3 Red(紅) 18AWG
4 Green(綠) 18AWG
5 Orange(橙) 18AWG
6 Blue(藍) 18AWG
7 White/Black(白/黑) 18AWG
8 Red/Black(紅/黑) 18AWG

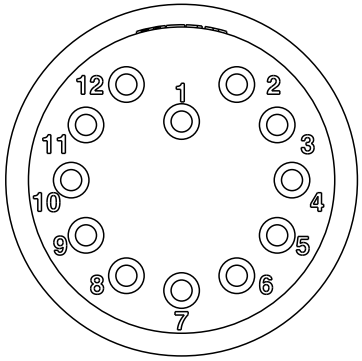

Pin Assignment(Front View)

Pin Out (12P)
1 Black(黑) 18AWG
2 White(白) 18AWG
3 Red(紅) 18AWG
4 Green(綠) 18AWG
5 Orange(橙) 18AWG
6 Blue(藍) 18AWG
7 White/Black(白/黑) 18AWG
8 Red/Black(紅/黑) 18AWG
9 Green/Black(綠/黑) 18AWG
10 Orange/Black(橙/黑) 18AWG
11 Blue/Black(藍/黑) 18AWG
12 Black/White(黑/白) 18AWG

UNIT:mm	TITLE: DT, HAD CIRCULAR MINI REAR FASTENED, M, M		ITEM NO	DRAWN BY: Eagle	DATE: 2022/09/30
TOLERANCE	SCALE: 1:2	SIZE: A4	SHEET: 4 OF 5	DWG NO: DT-HCN-XXRMM-RHA30	CHECKED BY: Aric	DATE: 2022/09/30
	REV.: A	WC-REV.	(QC):Inspection item	CUSTOMER: ALTW	APPROVED BY: Max	DATE: 2022/09/30

Amphenol LTW
安費諾亮泰企業股份有限公司

THIS DOCUMENT IS SUBJECT TO CHANGE WITHOUT NOTICE. IT IS CONFIDENTIAL AND A PROPERTY OF Amphenol LTW. DISCLOSURE TO THIRD PARTY HAS TO BE AUTHORIZED BY Amphenol LTW.

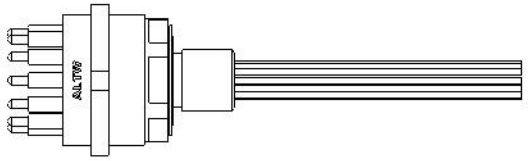

3P/4P/6P/8P: 10PCS(Max.)
12P: 8PCS(Max.)

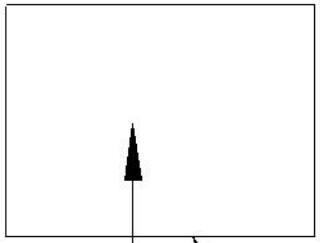

Tray

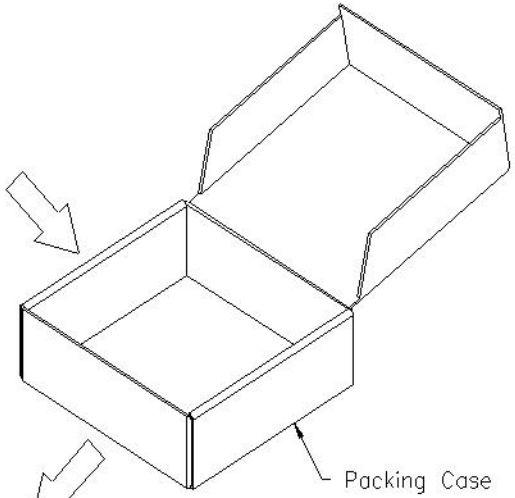

Packing Case

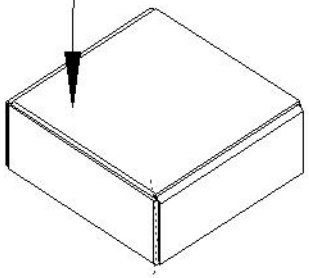

年 月 ALTW 合格品 RoHS2.0

料號: _____ 廠商: 昆山安費諾正日電子

數量: _____ PC 日期: _____

Lot No: _____ 版本: _____

採購單號: _____

廠商料號: _____

UNIT: mm	TITLE: DT, HAD CIRCULAR MINI REAR FASTENED, M, M		ITEM NO	DRAWN BY: Eagle	DATE: 2022/09/30
TOLERANCE ±0.5	SCALE: 1:1	SIZE: A4	SHEET 5 OF 5	DWG NO: DT-HCN-XXRMM-RHA30	CHECKED BY: Aric	DATE: 2022/09/30
	REV.: A	WC-REV.: A.5	QC: Inspection item	CUSTOMER: ALTW	APPROVED BY: Max	DATE: 2022/09/30

Amphenol LTW
安費諾亮泰企業股份有限公司

W10814-03-RM01A2

THIS DOCUMENT IS SUBJECT TO CHANGE WITHOUT NOTICE. IT IS CONFIDENTIAL AND A PROPERTY OF Amphenol LTW. DISCLOSURE TO THIRD PARTY HAS TO BE AUTHORIZED BY Amphenol LTW.