MS/Standard
DL-Class
Pre-Earth type

Amphenol®

Amphenol MIL-C-5015 Connectors
DL Series
Pre-earth type

Box mounting Receptacle

Straight Plug

Right Angle Plug

DL Series are highly reliable circular connectors (wire soldering type) approved by **TÜV** satisfying European safety standards and **UL** standards.
They feature IP67 class water and dust proof, when mated and a protective earth circuit with first mate break grounding contacts.
They are ideal for use in machine tools, robots, and other industrial machines. ermatable with MS connector.

Shells:
Shell components are fabricated from high grade aluminum alloy. Electrically zinc plate finish with an black chromate after treatment offers corrosion resistance.
Consult Amphenol Daeshin for other plating options.

Contacts:
Pins and sockets are machined from copper alloy with silver plated finish. Size 16 and 12 socket incorporate a closed entry design.

Insulators:
Front inserts are Silicone rubber and Rear inserts are PPS resin for box mount receptacle only.
and also straight & right angle plug's insert is PPS resin.

Amphenol®

Amphenol MIL-C-5015 Connectors DL3102A

Box mounting receptacle

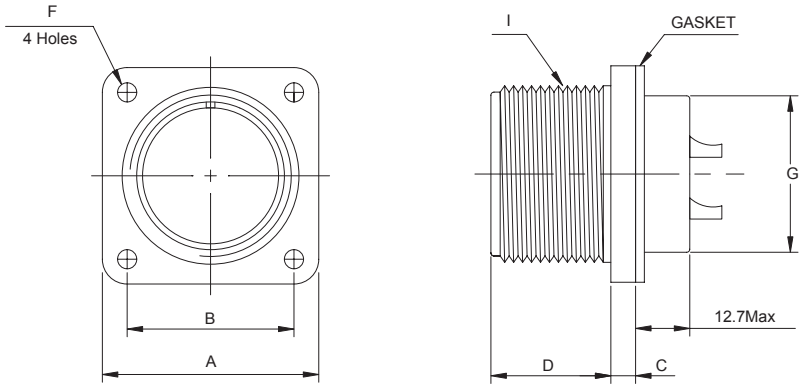

DL3102A box mounting receptacles are used on boxes and equipment cases where no cable support is required.

(mm)

Shell Size	□A ±0.79	□B ±0.12	C ±0.3	D +0.79 −0.00	E ±0.2	Ø F +0.25 −0.12	Ø G Max	I Thread-2A (UNEF)
10SL	25.40	18.26	2.1	14.28	23.5	3.05	16	5/8-24 NEF
18	34.93	26.97	2.7	19.05	28.0	3.05	25	1 1/8-18 NEF
20	38.10	29.36	2.7	19.05	30.0	3.05	30	1 1/4-18 NEF
22	41.28	31.75	2.7	19.05	30.8	3.05	33	1 3/8-18 NEF
24	44.45	34.93	2.7	20.63	32.4	3.73	36	1 1/2-18 NEF
24-10(G)*	44.45	34.93	2.7	20.63	32.4	3.73	36	1 1/2-18 NEF
32	57.05	44.45	3.9	22.5	33.9	4.4	48	2-18 NS

* Attention:No grounding pin in DL3102A24-10P(G)

Amphenol®

Amphenol MIL-C-5015 Connectors

DL3106A

Straight Plug

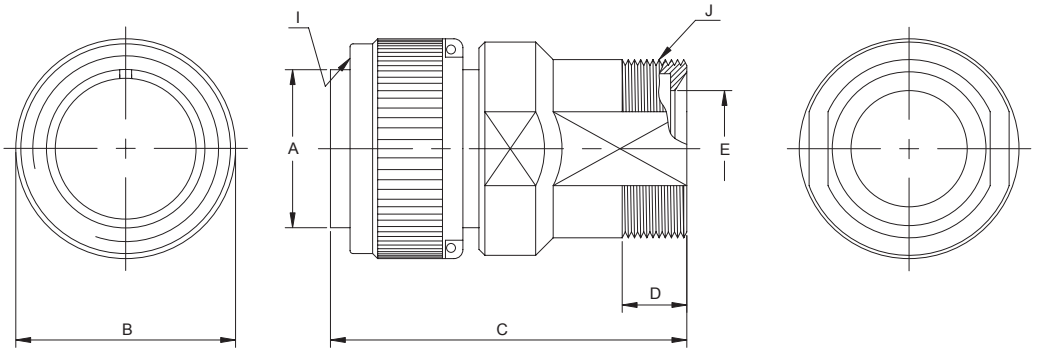

DL3106A straight plugs are used with 3102 receptacles.

(mm)

Shell Size	Ø A +0.00 −0.38	Ø B Max	C Max	D Min	E Max	I Thread-2B (UNEF)	J Thread-2A (UNEF)
10SL	11.33	24.61	44.2	10.0	6.8	5/8-24 NEF	5/8-24 NEF
18	23.62	34.13	58.3	11.5	15.0	1 1/8-18 NEF	1-20 NEF
20	26.27	37.31	60.0	11.0	17.0	1 1/4-18 NEF	1 3/16-18 NEF
22	29.85	40.48	67.6	11.0	17.0	1 1/4-18 NEF	1 3/16-18 NEF
24	33.02	43.66	71.8	11.5	19.8	1 1/2-18 NEF	1 7/16-18 NEF
24-10(G)*	33.02	43.66	71.8	11.5	19.8	1 1/2-18 NEF	1 7/16-18 NEF
32	44.9	57.00	73.0	10.5	27.0	2-18 NS	1 3/4-18 NS

* Attention:No grounding pin in DL3102A24-10P(G)

Amphenol®

Amphenol MIL-C-5015 Connectors DL3108A

Right Angle Plug

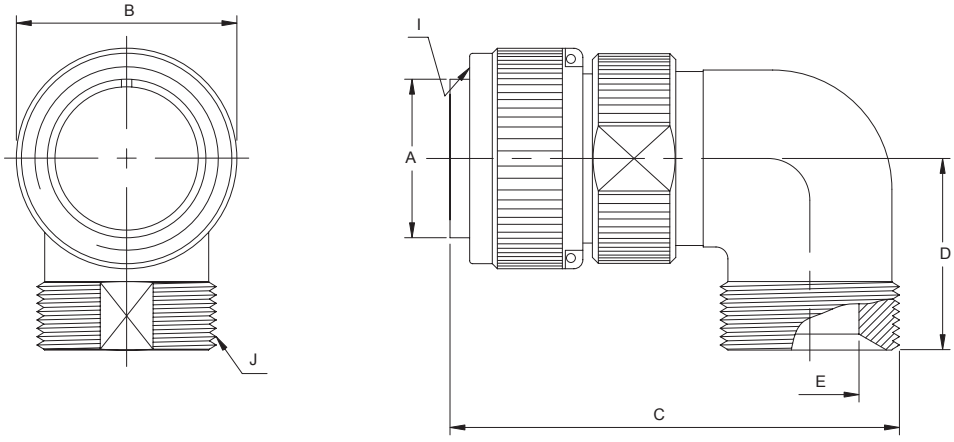

DL3108A Right angle plugs have a solid endbell and are used where wire must be brought at an abrupt angle.

(mm)

Shell Size	Ø A +0.00 −0.38	Ø B Max	C Max	D Max	E Max	I Thread-2B (UNEF)	J Thread-2A (UNEF)
10SL	11.33	24.61	44.0	24.0	6.8	5/8-24 NEF	5/8-24 NEF
18	23.62	34.13	65.0	30.01	5.0	1 1/8-18 NEF	1-20 NEF
20	26.27	37.31	74.2	32.01	7.0	1 1/4-18 NEF	1 3/16-18 NEF
22	29.85	40.48	73.0	32.01	7.0	1 3/8-18 NEF	1 3/16-18 NEF
24	33.02	43.66	82.0	38.21	9.8	1 1/2-18 NEF	1 7/16-18 NEF
24-10(G)*	33.02	43.66	82.0	38.21	9.8	1 1/2-18 NEF	1 7/16-18 NEF
32	44.9	57.00	91.0	44.5	27.0	2-18 NS	1 3/4-18 NS

* Attention:No grounding pin in DL3102A24-10P(G)

Amphenol®

Amphenol MIL-C-5015 Connectors
DL Series

Insert Arrangements

Contact Arrangement	Service Rating	Total Contacts	Contact Size					Alternate Position-Degrees			
			0	4	8	12	16	W	X	Y	Z
10SL-3	A	3					3	-	-	-	-
18-10	A	4				4		-	120	240	-
18-12	A	6					6	80	-	-	280
20-15	A	7				7		80	-	-	280
22-22	A	4			4			-	110	250	-
24-10	A	7			7			80	-	-	280
32-17	D	4		4				45	110	250	280

Contact Arrangement

Front of Socket Insert

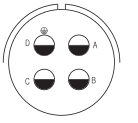

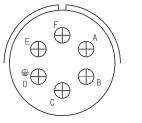

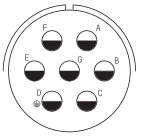

Insert Arrangement	10SL-3	18-10	18-12	20-15
Service Rating	A	A	A	A
Number of Contacts	3	4	6	7
Contact Size	16	12	16	12

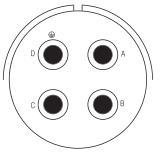

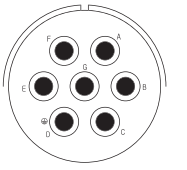

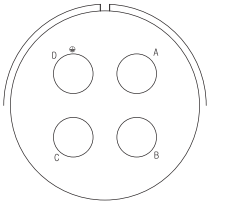

Insert Arrangement	22-22	24-10	32-17
Service Rating	A	A	D
Number of Contacts	4	7	4
Contact Size	8	8	4

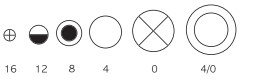

Amphenol®

Amphenol MIL-C-5015 Connectors
DL Series
Accessories Dimension

Cable Clamp
DL3057

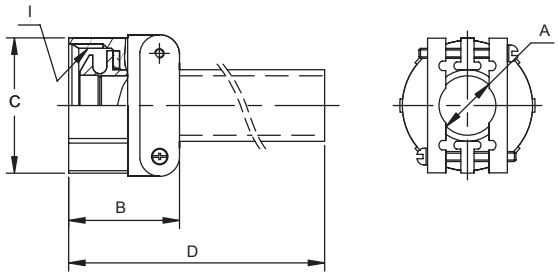

(mm)

Part Number	Size	Ø A	B	Ø C	D	I Thread-2B
DL3057-4A	10SL	6.0	20.3	23.3	53.3	5/8-24 NEF
DL3057-10A	18	14.0	23.6	32.2	54.4	1-20 NEF
DL3057-12A	20,22	15.9	23.6	37.8	57.3	1 3/16-18 NEF
DL3057-16A	24	18.0	26.0	43.4	56.4	1 7/16-18 NEF

DL3057 style cable clamp was designed for use with jacketed cable or wire protected by tubing.
Both clamping halves float maximum strain relief.
for unjacketed cable or wires, use corresponding DL3420 telescoping busing.
To order clamp without busing, add -1 to the P/N.

Telescoping Bushing
DL3420

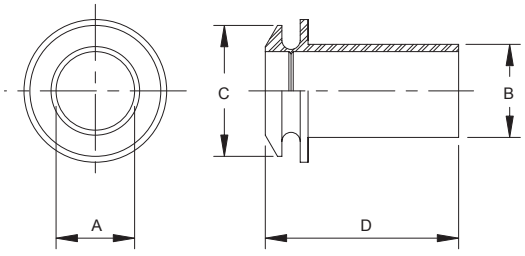

(mm)

Part Number	Size	Ø A Max	Ø B Max	Ø C	D
DL3420-4	10SL	6.0	7.7	12.0	47.5
DL3420-10	18	14.0	15.6	20.7	52.2
DL3420-12	20,22	15.9	18.8	24.5	52.3
DL3420-16	24	18.0	23.6	30.0	56.0

Telescoping grand bushings (used with 3057 clamp) keep dirt, oil and moisture out of endbell.
Taping or wrapping wires is eliminated since bushing protects wires going thru clamp.
Combinations of bushing may be used to decrease cable entry diameter to improve sealing.

Characterics & Electrical data

(mm)

Current Rating	Contact Size	#16	#12	#8	#4
	Max.value	13A	23A	46A	80A
Wire Range	A.W.G	#20 ~ #16	#14 ~ #12	#10 ~ #8	#6 ~ #4
Voltage Rating	AC(r.m.s)	200V	250V	250V	250V
	DC	350V	500V	500V	500V
Operating Temperature	-40°C to +125°C				

Amphenol®

Amphenol MIL-C-5015 Connectors
DL-Series, Pre-Earth type
How to order

MIL-C-5015 (Solder Contacts)

DL	3102A	32 –	17	P	XXX
1	2	3	4	5	6

1. Connector Type
   DL - designates

2. Connector Style
   3102A - box mounting receptacle
   3106A - straight plug
   3108A - 90° Right angle plug

3, 4. Shell size and insert arrangement - see tables, pages 62

5. Contact Types
   P - designates pin contact, (+) Male
   S - designates socket contact, (-) Female

6. Plating information
   No suffix - Olive Drab Zinc
   C1 - Cobalt (Without +6 Cr)
   621 - Black Zinc
   689 - Electro-less Nickel

Amphenol®

Amphenol Daeshin

588 Songnae-dong, Sosa-Gu,
Bucheon-City, Kyunggi-Do, Korea
Phone:82-32-610-3800 Fax:82-32-673-2507
www.amphenol.co.kr
Information mail : info@amphenol.co.kr

ADS-2008

Mouser Electronics

Authorized Distributor

Click to View Pricing, Inventory, Delivery & Lifecycle Information:

Amphenol:
DL3102A18-10P