D Subminiature

Connectors

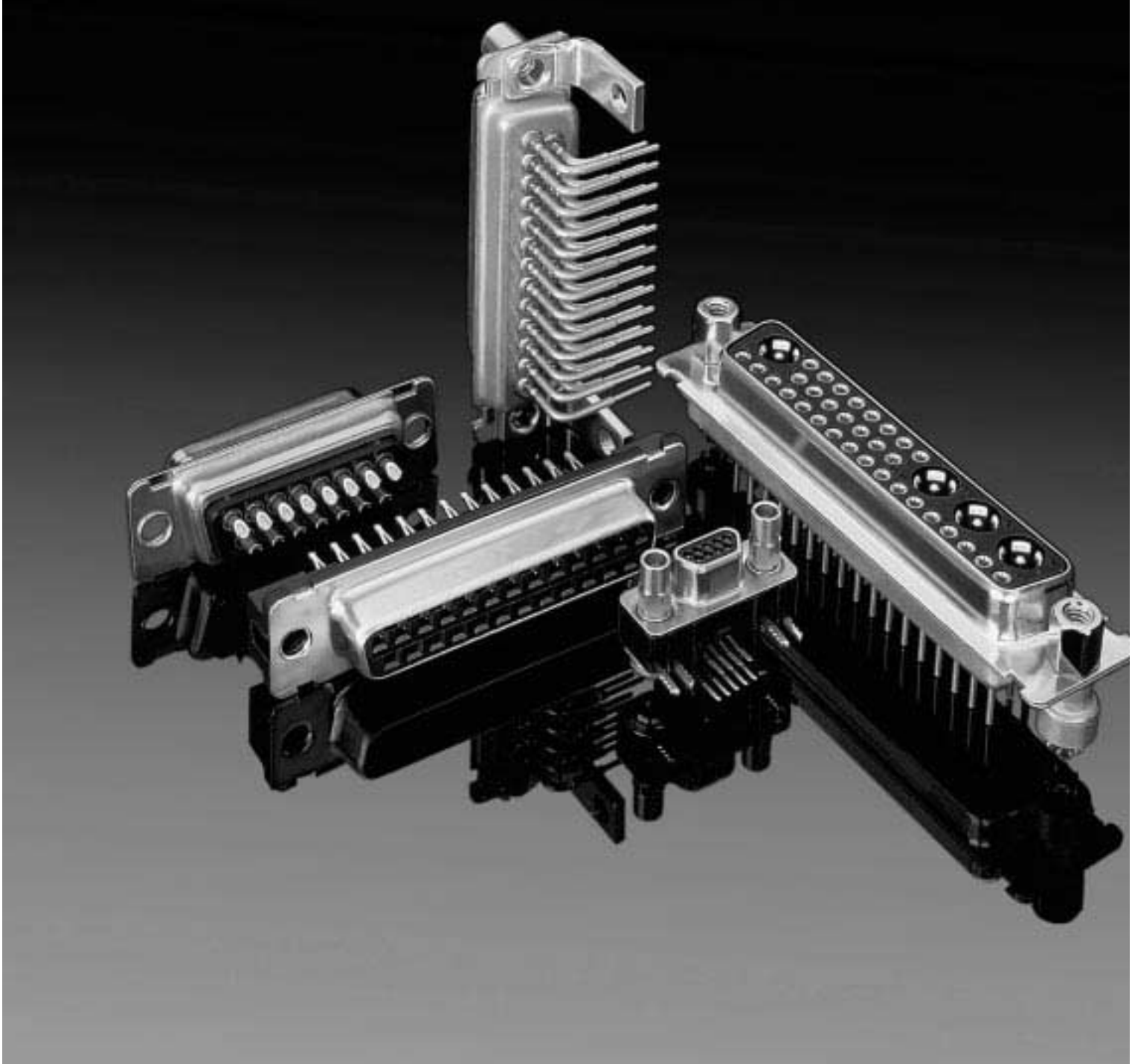

Contents

The ITT Cannon D Subminiature family of connectors has grown to include a wide variety of styles, options and accessories and is often the most economical solution to any interconnect problem. Ideally suited for both commercial/industrial applications and military/aerospace applications, ITT Cannon D Subminiature connectors have found worldwide acceptance in a multitude of applications ranging from office equipment to satellites.

Contents Page

General Application D Subminiature Connectors

- Straight PCB Selection Guide . . . 2
  - D*NG Pressfit Termination . . . 4
  - D*M Solder Termination (Machined) — Standard PC Tails . . . 6
  - ZD* Solder Termination (Stamped) . . . 8
  - D* Solder Termination (Machined) — European PC Tails . . . 10
  - D* Wrap Post Termination . . . 12
- 90° PCB Selection Guide . . . 14
  - D*M Solder Termination (Machined) — Standard Footprint .318♦ or .283♦♦ inch . . . 16
  - ZED* Solder Termination (Stamped) — Standard Footprint .318 inch . . . 18
  - D* Solder Termination (Machined) — European Footprint 10,2♦ or 9,4♦♦ mm . . . 20
  - ZD* Solder Termination (Stamped) — European Footprint 10,2 mm . . . 28
- Cable Selection Guide . . . 30
  - D Solder Cup Solder Termination (Machined) with Tin Shells . . . 32
  - ZD* Solder Cup Solder Termination (Stamped) with Tin Shells . . . 34
  - D*A Crimp Connectors without Contacts . . . 36
  - D*W Discrete Wire IDC . . . 38

Special Application D Subminiature Connectors

- Combo D® Selection Index . . . 42
  - Combo D® PCB Connectors with 75 Ohm Coaxial Contacts (50 Ohm Option) . . . 44
  - Combo D® PCB Connectors with High Power . . . 60
  - Combo D® PCB Connectors with (Size 20) Signal Contacts Only . . . 74
  - Combo D® Cable Solder Cup . . . 78
  - Combo D® Cable Crimp Connectors and Shield Cans . . . 80
  - Loose Contacts and Tooling . . . 83
- Commercial Micro D Selection Index . . . 96
  - MDSM Connectors and Tooling . . . 98
- Filter D Selection Index . . . 104
  - Product Performance . . . 106
  - D*JK PCB Connectors . . . 108
  - D*JT Solder Cup and Combo High Power Connectors . . . 122

High Reliability D Subminiature Connectors

- Military/High Reliability Selection Index . . . 130
  - PCB 90°, Straight, Wrap Post, and Cable Solder Cup . . . 132
  - 24308-Style Cross References and Test Data . . . 1 4 2
  - Military/High Reliability Combo D® . . . 146
- SNASA/GSFC & ESA-SCC Cross References . . . 195

Accessories Selection Guide . . . 198
- Backshells . . . 200
- Locking Hardware . . . 208
- Miscellaneous . . . 214

Reader's Resource Selection Index . . . 219
- Dimensional Reference Data . . . 220
- Lease Tooling . . . 275
- Glossary of Terms . . . 276
- Obsolete Products/Available Products Not Previously Listed . . . 282
- Part Number Index . . . 283
- Product Safety and Warranty . . . 297

On the Cover ◄
Filter D, Combo D®, Commercial Micro D (MDSM), Pressfit D, and Standard D

Our facility is not currently certified by the DLA and this product is not covered by the QPL/QML.

Combo D® is a registered trademark of ITT Cannon in the United States.
♦ Connector footprint measured from the front shell.
♦♦ Connector footprint measured from the rear shell.

D*NG - Straight Pressfit Termination

See pages 4-5.

The D*NG is based upon the specification CECC75-301-802. These connectors provide a low-cost alternative to traditional through hole solder contacts. Utilizing stamped ''Eye of the Needle'' compliant contact tails per IEC-352-5, the parts are quickly and easily mounted onto PCBs without soldering, crimping or specialized tooling. The socket contact engaging area utilizes a ''spoon'' shape with four points of interconnection. Hardware options provide flexibility and ensure that the final product fits the electrical requirements of any application.

Product Features

Quick and easy press-in installation without specialized tooling
''Spoon'' socket contact provides improved interface compared to ''Tuning Fork''
Closed-entry socket for secure blind mating
Front-shell only design based on CECC 75-301-802
''Eye of the Needle'' compliant contact tails
Press-in bolt for ground continuity
#4-40 UNC and M3 hardware options

D*M Straight Solder Termination (Machined) — Standard PC Tails

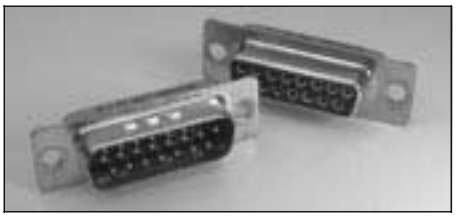

See pages 6-7.

D*M straight PCB connectors, which are designed to be equivalent to MIL-C-24308 (except for finishes) for printed circuit boards and backplanes in demanding applications. Additional contact lengths, hardware and finish options available; consult factory for details.

Product Features

7.5 A current capacity
Machined contacts
2 contact finishes
Optional vertical standoffs, screw locks, and boardlocks (4 prongs)
UL file number E8572
Dimensionally compatible with Combo D®

ZD* - Straight Solder Termination (Stamped)

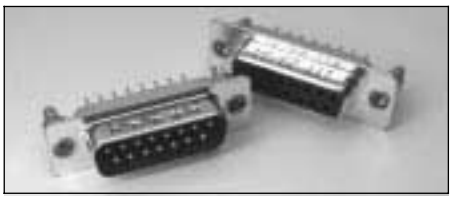

See pages 8-9.

ZD* straight connectors are available for applications where price is the primary driver. They are available with or without boardlocks and screw locks.

Product Features

Stamped contacts with 5 A current capacity
Economical
Optional vertical standoffs with optional harpoon style boardlocks or screw locks

D* - Straight Solder Termination (Machined) — European PC Tails

See pages 10-11.

D* straight connectors are available for high performance uses according to DIN 41652. Available with European length OL contacts.

Select contact finish from 2 performance classes.

Product Features

High performance commercial connectors
Two contact finish performance classes
Optional vertical standoffs, threaded inserts and pushfits/boardlocks
OL2 contact length, other lengths available
Tin plated contact PC tails (pin & socket)
Machined contacts

D* - Wrap Post Termination

See pages 12-13.

D* straight connectors are available for high performance uses according to DIN 41652. Contacts available in two popular lengths.

Product Features

High performance commercial class connectors
Two contact lengths for 2 or 3 wraps
Machined contacts

ITT Cannon

Dimensions are shown in mm (inch)
Dimensions subject to change

Specifications

Current Rating	5 A / 25°C, 3.5 A / 70°C ambient
Temperature Rating	−55°C to 125°C
Contact Resistance	10 mΩ
Test Voltage	1200 Vrms at Sea Level
∅ Plated Through Hole	1,09 - 0,94 (.043 - .037)
PC Tail Press-in Force	100N/contact max.
PC Tail Push-out Force	30N/contact min.
PC Board Thickness	3,20 - 1,60 (.125 - .062)

Materials and Finishes

Description	Material	Finish
Shell	Steel	Tin
Insulator	Thermoplastic, UL 94V-0	None (color: black)
Contact	Copper Alloy	Gold over Nickel (Standard) or Gold over PdNi (-408)
Hardware	Steel/Copper Alloy	Tin/Zinc

Specifications

Temperature Rating	−55°C to 125°C
Current Rating	7.5 A
Contact Resistance	55 millivolt max at 7.5 A test current
Dielectric Withstanding Voltage	1000 VAC at Sea Level

Materials and Finishes

Description	Material	Finish
Shell	Steel	Tin
Insulator	Thermoplastic, UL 94V-0	None (color: dark green)
Contact	Copper Alloy	Gold over Nickel. Terminating end Tin (Socket only)
Hardware	Steel/Copper Alloy	Tin/Zinc

Specifications

Temperature Rating	−55°C to 105°C
Current Rating	5 A
Contact Resistance	15 mΩ
Dielectric Withstanding Voltage	1000 VAC at Sea Level

Materials and Finishes

Description	Material	Finish
Shell	Steel	Tin
Insulator	Thermoplastic, UL 94-0	None (color: black)
Contacts	Copper Alloy	Gold over Nickel
Hardware	Steel/Copper Alloy	Tin/Zinc

Specifications

Temperature Rating	−55°C to 125°C
Current Rating	5 A
Contact Resistance	10 mΩ
Dielectric Withstanding Voltage	1250 VAC at Sea Level

Materials and Finishes

Description	Material	Finish
Shell	Steel	Tin
Insulator	Thermoplastic, UL 94V-0	None (color: dark green)
Contacts	Copper Alloy	Gold over Nickel in mating area, Tin on balance
Hardware	Steel/Copper Alloy	Tin/Zinc

Specifications

Temperature Rating	−55°C to 125°C
Current Rating	5 A
Contact Resistance	10 mΩ
Dielectric Withstanding Voltage	1250 VAC at Sea Level

Materials and Finishes

Description	Material	Finish
Shell	Steel	Tin
Insulator	Thermoplastic, UL 94V-0	None (color: dark green)
Contact	Socket: Copper Alloy	Gold over Nickel. Terminating end Tin (Socket)
Hardware	Steel/Copper Alloy	Tin/Zinc

Straight Pressfit Termination

Plug

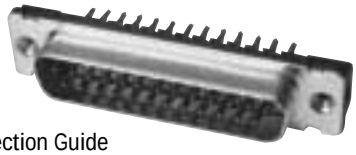

Selection Guide
For Product Features, Specifications, Materials and Finishes, see pages 2-3.

Reader's Resource
For contact cavity arrangements, see page 224.
For P.C. hole patterns, see page 274.
For panel cutouts, see page 221.

Part Numbers

Shell Size	Layout	Through Hole	Clinch Nut # 4-40 UNC	Clinch Nut M3	Press-In Bolt # 4-40 UNC	Press-In Bolt M3
DE	9	DENG9P-P1	DENGE9P-P1	DENGX9P-P1	DENGZ9P-P1	DENGL9P-P1
DA	15	DANG15P-P1	DANGE15P-P1	DANGX15P-P1	DANGZ15P-P1	DANGL15P-P1
DB	25	DBNG25P-P1	DBNGE25P-P1	DBNGX25P-P1	DBNGZ25P-P1	DBNGL25P-P1
DC	37	DCNG37P-P1	DCNGE37P-P1	DCNGX37P-P1	DCNGZ37P-P1	DCNGL37P-P1
DD	50	DDNG50P-P1	DDNGE50P-P1	DDNGX50P-P1	DDNGZ50P-P1	DDNGL50P-P1

Note: For performance class 1 (gold over PdNi finish) add -408. Example: DENG9P-P1-408.

Engaging Face

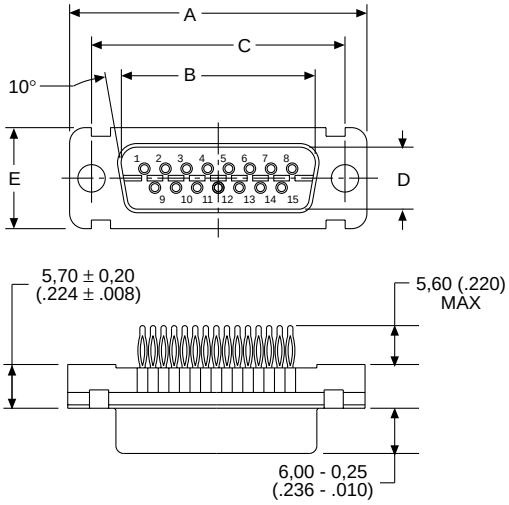

DD Configuration

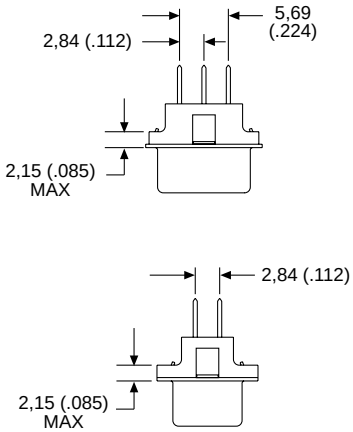

Dimensions

Shell Size	A ±0,38 (.015)	B ±0,13 (.005)	C ±0,13 (.005)	D ±0,13 (.005)	E ±0,38 (.015)
DE	30,81 (1.213)	16,92 (.666)	24,99 (.984)	8,36 (.329)	12,55 (.494)
DA	39,14 (1.541)	25,25 (.994)	33,32 (1.312)	8,36 (.329)	12,55 (.494)
DB	53,04 (2.088)	38,96 (1.534)	47,04 (1.852)	8,36 (.329)	12,55 (.494)
DC	69,32 (2.729)	55,42 (2.182)	63,50 (2.500)	8,36 (.329)	12,55 (.494)
DD	66,93 (2.635)	52,81 (2.079)	61,11 (2.406)	11,07 (.436)	15,37 (.605)

Mounting Types

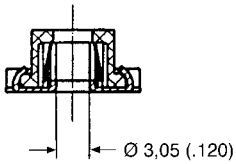

Through Hole

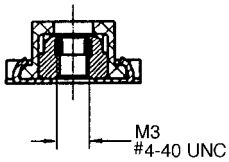

Clinch Nut

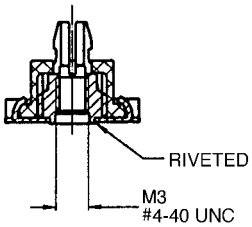

Press-In Bolt

ITT Cannon

Dimensions are shown in mm (inch)
Dimensions subject to change

Straight Pressfit Termination

Receptacle

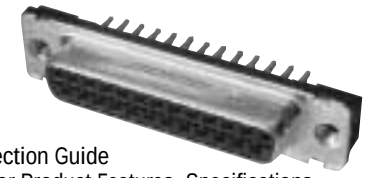

Selection Guide
For Product Features, Specifications, Materials and Finishes, see pages 2-3.

Reader's Resource
For contact cavity arrangements, see page 224.
For P.C. hole patterns, see page 274.
For panel cutouts, see page 221.

Part Numbers

Shell Size	Layout	Through Hole	Clinch Nut # 4-40 UNC	Clinch Nut M3	Press-In Bolt # 4-40 UNC	Press-In Bolt M3
DE	9	DENG9S-P1	DENGE9S-P1	DENGX9S-P1	DENGZ9S-P1	DENGL9S-P1
DA	15	DANG15S-P1	DANGE15S-P1	DANGX15S-P1	DANGZ15S-P1	DANGL15S-P1
DB	25	DBNG25S-P1	DBNGE25S-P1	DBNGX25S-P1	DBNGZ25S-P1	DBNGL25S-P1
DC	37	DCNG37S-P1	DCNGE37S-P1	DCNGX37S-P1	DCNGZ37S-P1	DCNGL37S-P1
DD	50	DDNG50S-P1	DDNGE50S-P1	DDNGX50S-P1	DDNGZ50S-P1	DDNGL50S-P1

Note: For performance class 1 (gold over PdNi finish) add -408. Example: DENG9S-P1-408.

Engaging Face

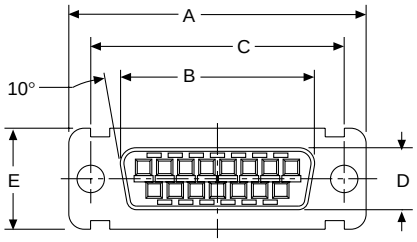

DD Configuration

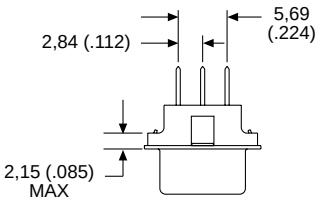

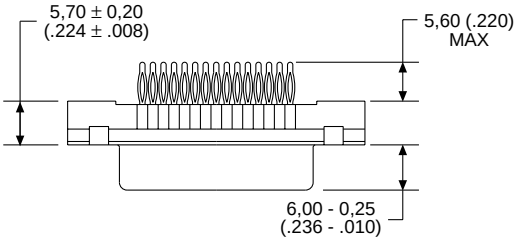

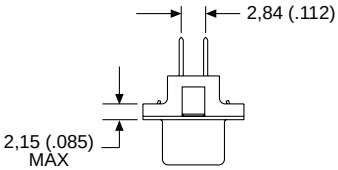

Dimensions

Shell Size	A ±0,38 (.015)	B ±0,13 (.005)	C ±0,13 (.005)	D ±0,13 (.005)	E ±0,38 (.015)
DE	30,81 (1.213)	16,33 (.643)	24,99 (.984)	7,90 (.311)	12,55 (.494)
DA	39,14 (1.541)	24,66 (.971)	33,32 (1.312)	7,90 (.311)	12,55 (.494)
DB	53,04 (2.088)	38,38 (1.511)	47,04 (1.852)	7,90 (.311)	12,55 (.494)
DC	69,32 (2.729)	54,84 (2.159)	63,50 (2.500)	7,90 (.311)	12,55 (.494)
DD	66,93 (2.635)	52,42 (2.064)	61,11 (2.406)	10,74 (.423)	15,37 (.605)

Mounting Types

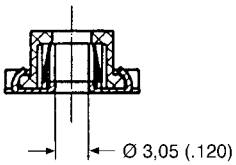

Through Hole

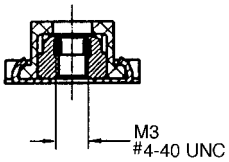

Clinch Nut

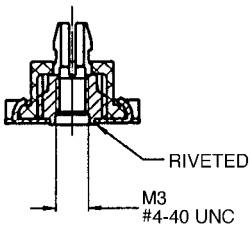

Press-In Bolt

Straight Solder Termination (Machined) — Standard PC Tails

Plug

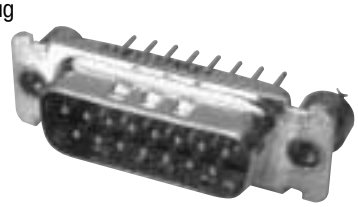

Selection Guide
For Product Features, Specifications, Materials and Finishes, see pages 2-3.

Reader's Resource
For contact cavity arrangements, see page 224.
For P.C. hole patterns, see page 274.
For panel cutouts, see page 221.
For hardware views (Standard), see page 226.

Part Numbers

Shell Size	Layout	Standoff	Standoff & Boardlock	Standoff, Boardlock & Screw Lock
DE	9	DEMV9PNK87	DEMZ9PNK87	DEMN9PNK87
DA	15	DAMV15PNK87	DAMZ15PNK87	DAMN15PNK87
DB	25	DBMV25PNK87	DBMZ25PNK87	DBMN25PNK87
DC	37	DCMV37PNK87	DCMZ37PNK87	DCMN37PNK87
DD	50	DDMV50PNK87	DDMZ50PNK87	DDMN50PNK87

Note: For contacts with 30 microinches gold substitute K127 for K87. Example: DEMN9PNK127

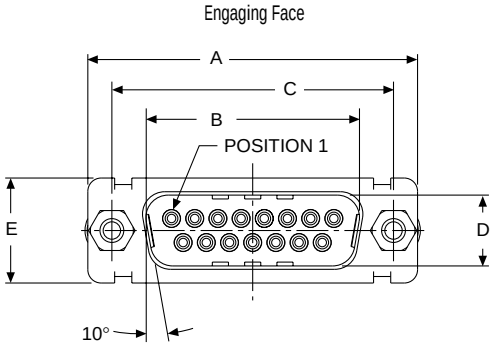

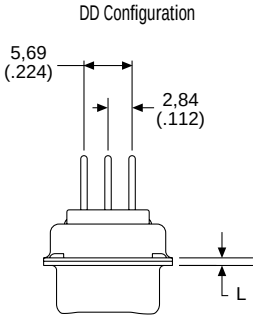

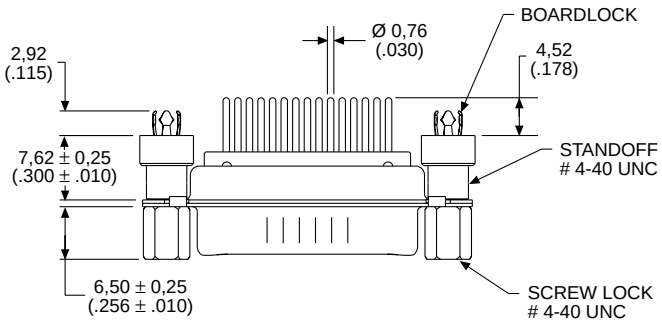

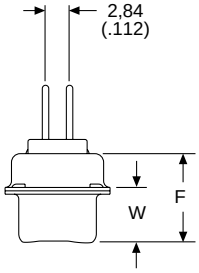

Dimensions

Shell Size	A ±0,38 (.015)	B ±0,13 (.005)	C ±0,13 (.005)	D ±0,13 (.005)	E ±0,38 (.015)	F ±0,25 (.010)	W ±0,368 (.0145)	W ±0,41 (.016)	L ±0,25 (.010)
DE	30,81 (1.213)	16,92 (.666)	24,99 (.984)	8,36 (.329)	12,55 (.494)	10,72 (.422)	6,693 (.2635)	—	0,76 (.030)
DA	39,14 (1.541)	25,25 (.994)	33,32 (1.312)	8,36 (.329)	12,55 (.494)	10,72 (.422)	6,693 (.2635)	—	0,76 (.030)
DB	53,04 (2.088)	38,96 (1.534)	47,04 (1.852)	8,36 (.329)	12,55 (.494)	10,82 (.426)	—	6,84 (.269)	0,99 (.039)
DC	69,32 (2.729)	55,42 (2.182)	63,50 (2.500)	8,36 (.329)	12,55 (.494)	10,82 (.426)	—	6,84 (.269)	0,99 (.039)
DD	66,93 (2.635)	52,81 (2.079)	61,11 (2.406)	11,07 (.436)	15,37 (.605)	10,82 (.426)	—	6,84 (.269)	0,99 (.039)

Dimensions are shown in mm (inch)
Dimensions subject to change

Straight Solder Termination (Machined) — Standard PC Tails

Receptacle

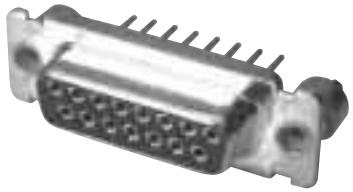

Selection Guide

For Product Features, Specifications, Materials and Finishes, see pages 2-3.

Reader's Resource

For contact cavity arrangements, see page 224.
For P.C. hole patterns, see page 274.
For panel cutouts, see page 221.
For hardware views (Standard), see page 226.

Part Numbers

Shell Size	Layout	Standoff	Standoff & Boardlock	Standoff, Boardlock & Screw Lock
DE	9	DEMV9SNA197	DEMZ9SNA197	DEMN9SNA197
DA	15	DAMV15SNA197	DAMZ15SNA197	DAMN15SNA197
DB	25	DBMV25SNA197	DBMZ25SNA197	DBMN25SNA197
DC	37	DCMV37SNA197	DCMZ37SNA197	DCMN37SNA197
DD	50	DDMV50SNA197	DDMZ50SNA197	DDMN50SNA197

Note: For contacts with 30 microinches gold substitute K126 for A197. Example: DEMN9SNK126

Engaging Face

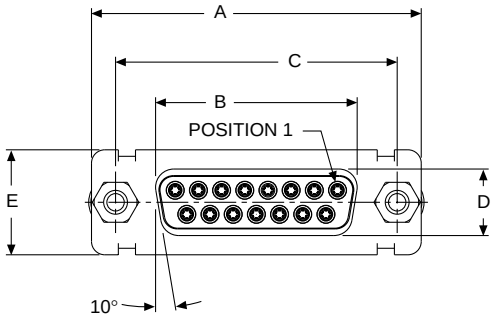

DD Configuration

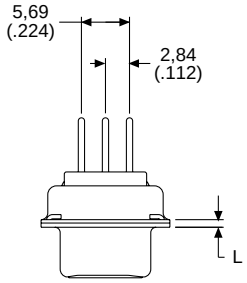

Hardware removed for clarity

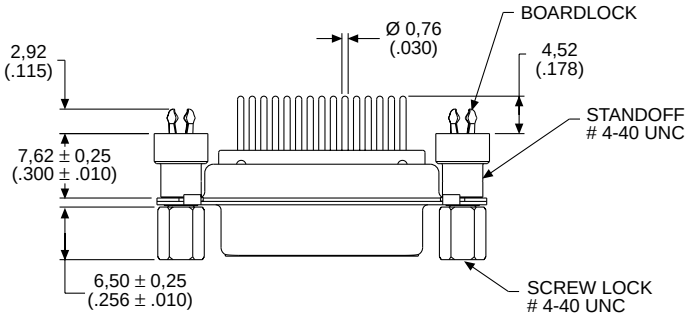

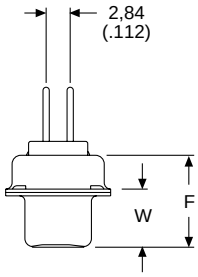

Hardware removed for clarity

Dimensions

Shell Size	A ±0,38 (.015)	B ±0,13 (.005)	C ±0,13 (.005)	D ±0,13 (.005)	E ±0,38 (.015)	F ±0,25 (.010)	W ±0,38 (.015)	L ±0,25 (.010)
DE	30,81 (1.213)	16,33 (.643)	24,99 (.984)	7,90 (.311)	12,55 (.494)	10,90 (.429)	6,94 (.273)	0,76 (.030)
DA	39,14 (1.541)	24,66 (.971)	33,32 (1.312)	7,90 (.311)	12,55 (.494)	10,90 (.429)	6,94 (.273)	0,76 (.030)
DB	53,04 (2.088)	38,38 (1.511)	47,04 (1.852)	7,90 (.311)	12,55 (.494)	10,90 (.429)	6,94 (.273)	0,76 (.030)
DC	69,32 (2.729)	54,84 (2.159)	63,50 (2.500)	7,90 (.311)	12,55 (.494)	10,90 (.429)	6,94 (.273)	0,76 (.030)
DD	66,93 (2.635)	52,42 (2.064)	61,11 (2.406)	10,74 (.423)	15,37 (.605)	10,90 (.429)	6,94 (.273)	0,76 (.030)

Straight Solder Termination (Stamped)

Plug

Part Numbers

Shell Size	Layout	Through Hole	Standoff With Boardlock
DE	9	ZDE9P-OL2	ZDEE9P-OL2-146
DA	15	ZDA15P-OL2	ZDAE15P-OL2-146
DB	25	ZDB25P-OL2	ZDBE25P-OL2-146
DC	37	ZDC37P-OL2	ZDCE37P-OL2-146
DD	50	ZDD50P-OL2	ZDDE50P-OL2-146

Selection Guide
For Product Features, Specifications, Materials and Finishes, see pages 2-3.

Reader's Resource
For contact cavity arrangements, see page 224.
For P.C. hole patterns, see page 274.
For panel cutouts, see page 221.
For hardware views (Standard), see page 226.

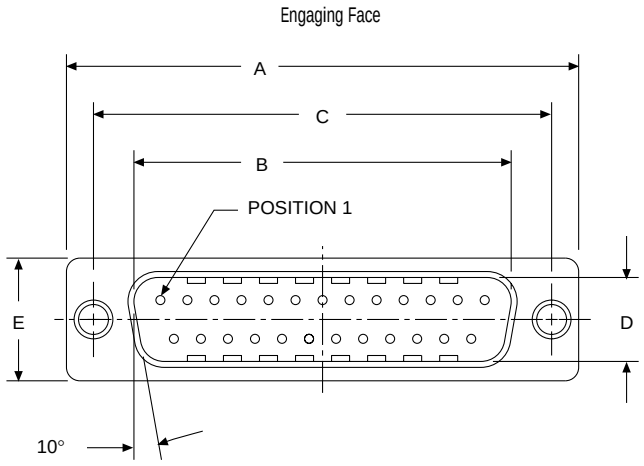

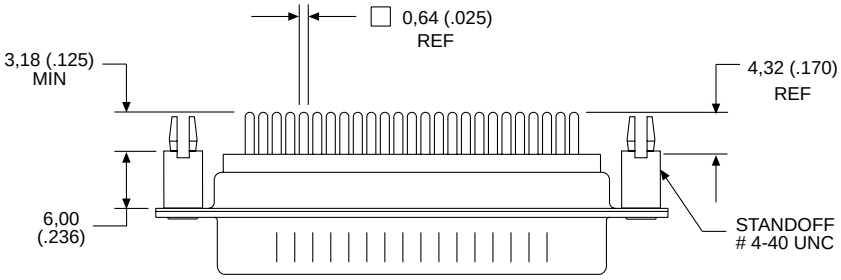

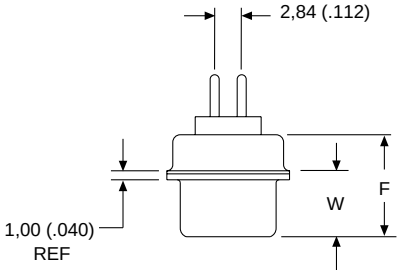

Hardware removed for clarity

Dimensions

Shell Size	A ±0,38 (.015)	B ±0,13 (.005)	C ±0,13 (.005)	D ±0,13 (.005)	E ±0,38 (.015)	F ±0,25 (.010)	W ±0,368 (.0145)	W ±0,41 (.016)
DE	30,81 (1.213)	16,92 (.666)	24,99 (.984)	8,36 (.329)	12,55 (.494)	10,72 (.422)	6,693 (.2635)	—
DA	39,14 (1.541)	25,25 (.994)	33,32 (1.312)	8,36 (.329)	12,55 (.494)	10,72 (.422)	6,693 (.2635)	—
DB	53,04 (2.088)	38,96 (1.534)	47,04 (1.852)	8,36 (.329)	12,55 (.494)	10,82 (.426)	—	6,84 (.269)
DC	69,32 (2.729)	55,42 (2.182)	63,50 (2.500)	8,36 (.329)	12,55 (.494)	10,82 (.426)	—	6,84 (.269)
DD	66,93 (2.635)	52,81 (2.079)	61,11 (2.406)	11,07 (.436)	15,37 (.605)	10,82 (.426)	—	6,84 (.269)

Dimensions are shown in mm (inch)
Dimensions subject to change

Straight Solder Termination (Stamped)

Receptacle

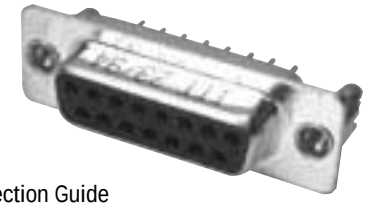

Selection Guide
For Product Features, Specifications, Materials and Finishes, see pages 2-3.

Reader's Resource
For contact cavity arrangements, see page 224.
For P.C. hole patterns, see page 274.
For panel cutouts, see page 221.
For hardware views (Standard), see page 226.

Part Numbers

Shell Size	Layout	Through Hole	Standoff With Boardlock
DE	9	ZDE9S-OL2	ZDEE9S-OL2-146
DA	15	ZDA15S-OL2	ZDAE15S-OL2-146
DB	25	ZDB25S-OL2	ZDBE25S-OL2-146
DC	37	ZDC37S-OL2	ZDCE37S-OL2-146
DD	50	ZDD50S-OL2	ZDDE50S-OL2-146

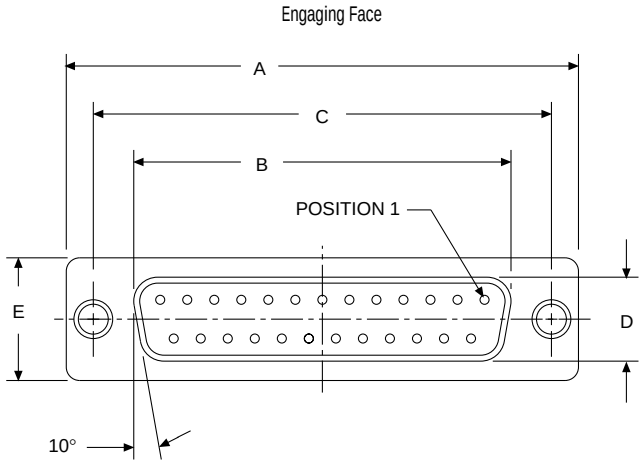

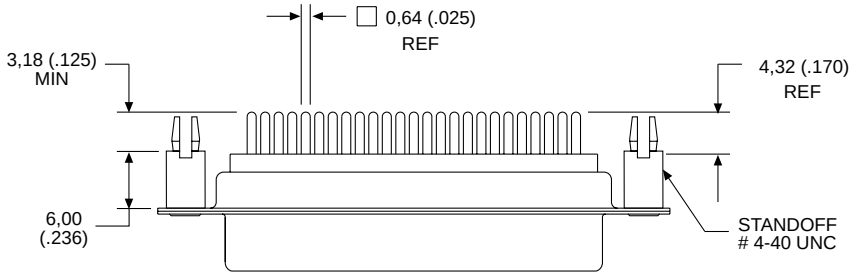

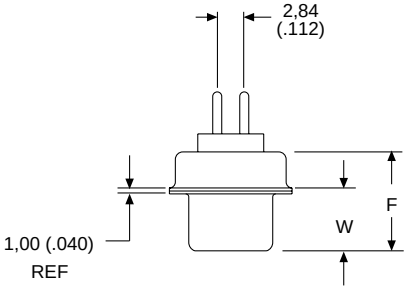

Hardware removed for clarity

Dimensions

Shell Size	A ±0,38 (.015)	B ±0,13 (.005)	C ±0,13 (.005)	D ±0,13 (.005)	E ±0,38 (.015)	F ±0,25 (.010)	W ±0,38 (.015)
DE	30,81 (1.213)	16,33 (.643)	24,99 (.984)	7,90 (.311)	12,55 (.494)	10,90 (.429)	6,94 (.273)
DA	39,14 (1.541)	24,66 (.971)	33,32 (1.312)	7,90 (.311)	12,55 (.494)	10,90 (.429)	6,94 (.273)
DB	53,04 (2.088)	38,38 (1.511)	47,04 (1.852)	7,90 (.311)	12,55 (.494)	10,90 (.429)	6,94 (.273)
DC	69,32 (2.729)	54,84 (2.159)	63,50 (2.500)	7,90 (.311)	12,55 (.494)	10,90 (.429)	6,94 (.273)
DD	66,93 (2.635)	52,42 (2,064)	61,11 (2.406)	10,74 (.423)	15,37 (.605)	10,90 (.429)	6,94 (.273)

Straight Solder Termination (Machined) — European PC Tails

Plug

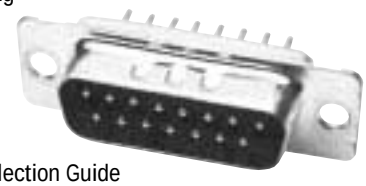

Selection Guide
For Product Features, Specifications, Materials and Finishes, see pages 2-3.

Reader's Resource
For contact cavity arrangements, see page 224.
For P.C. hole patterns, see page 274.
For panel cutouts, see page 221.
For hardware views (European), see page 227.

Part Numbers

Shell Size	Layout	Through Hole	Standoff #4-40 UNC With Pushfit/Boardlock	Standoff M3 With Pushfit/Boardlock
DE	9	DE9P-0L2-K87	DEE9P-0L2-K87-146	DEX9P-0L2-K87-146
DA	15	DA15P-0L2-K87	DAE15P-0L2-K87-146	DAX15P-0L2-K87-146
DB	25	DB25P-0L2-K87	DBE25P-0L2-K87-146	DBX25P-0L2-K87-146
DC	37	DC37P-0L2-K87	DCE37P-0L2-K87-146	DCX37P-0L2-K87-146
DD	50	DD50P-0L2-K87	DDE50P-0L2-K87-146	DDX50P-0L2-K87-146

Note: For performance class 2 add -A191. Example DA15P-OL2-A191-K87.

PC Tail Modifier	X ±0,30 (.012)	Y ±0,30 (.012)
OL2	5,20 (.205)	10,20 (.401)
OL4	6,75 (.266)	11,80 (.465)

Engaging Face

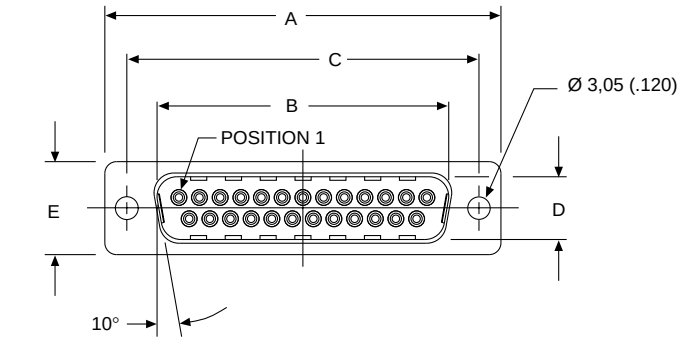

DD Configuration

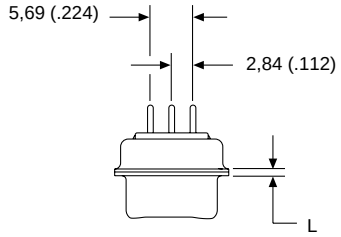

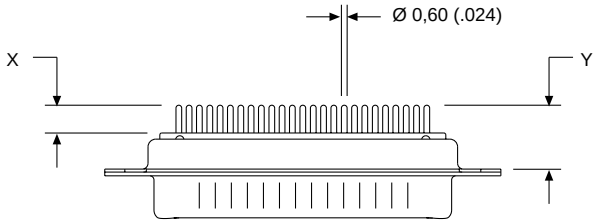

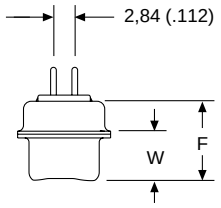

Dimensions

Shell Size	A ±0,38 (.015)	B ±0,13 (.005)	C ±0,13 (.005)	D ±0,13 (.005)	E ±0,38 (.015)	F ±0.25 (.010)	W ±0,368 (.0145)	W ±0,41 (.016)	L ±0,25 (.010)
DE	30,81 (1.213)	16,92 (.666)	24,99 (.984)	8,36 (.329)	12,55 (.494)	10,72 (.422)	6,693 (.2635)	—	0,76 (.030)
DA	39,14 (1.541)	25,25 (.994)	33,32 (1.312)	8,36 (.329)	12,55 (.494)	10,72 (.422)	6,693 (.2635)	—	0,76 (.030)
DB	53,04 (2.088)	38,96 (1.534)	47,04 (1.852)	8,36 (.329)	12,55 (.494)	10,82 (.426)	—	6,84 (.269)	0,99 (.039)
DC	69,32 (2.729)	55,42 (2.182)	63,50 (2.500)	8,36 (.329)	12,55 (.494)	10,82 (.426)	—	6,84 (.269)	0,99 (.039)
DD	66,93 (2.635)	52,81 (2.079)	61,11 (2.406)	11,07 (.436)	15,37 (.605)	10,82 (.426)	—	6,84 (.269)	0,99 (.039)

Dimensions are shown in mm (inch)
Dimensions subject to change

Straight Solder Termination (Machined) — European PC Tails

Receptacle

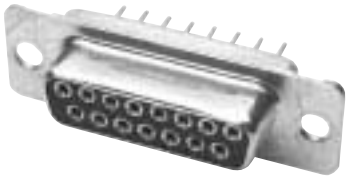

Selection Guide
For Product Features, Specifications, Materials and Finishes, see pages 2-3.

Reader's Resource
For contact cavity arrangements, see page 224.
For P.C. hole patterns, see page 274.
For panel cutouts, see page 221.
For hardware views (European), see page 227.

Part Numbers

Shell Size	Layout	Through Hole	Standoff #4-40 UNC With Pushfit/Boardlock	Standoff M3 With Pushfit/Boardlock
DE	9	DE9S-0L2-A197	DEE9S-0L2-A197-146	DEX9S-0L2-A197-146
DA	15	DA15S-0L2-A197	DAE15S-0L2-A197-146	DAX15S-0L2-A197-146
DB	25	DB25S-0L2-A197	DBE25S-0L2-A197-146	DBX25S-0L2-A197-146
DC	37	DC37S-0L2-A197	DCE37S-0L2-A197-146	DCX37S-0L2-A197-146
DD	50	DD50S-0L2-A197	DDE50S-0L2-A197-146	DDX50S-0L2-A197-146

Note: For performance class 2 add -A191. Example DA15S-0L2-A191-A197

PC Tail Modifier	X ±0,30 (.012)	Y ±0,30 (.012)
0L2	5,20 (.205)	10,20 (.401)
0L4	6,75 (.266)	11,80 (.465)

Engaging Face

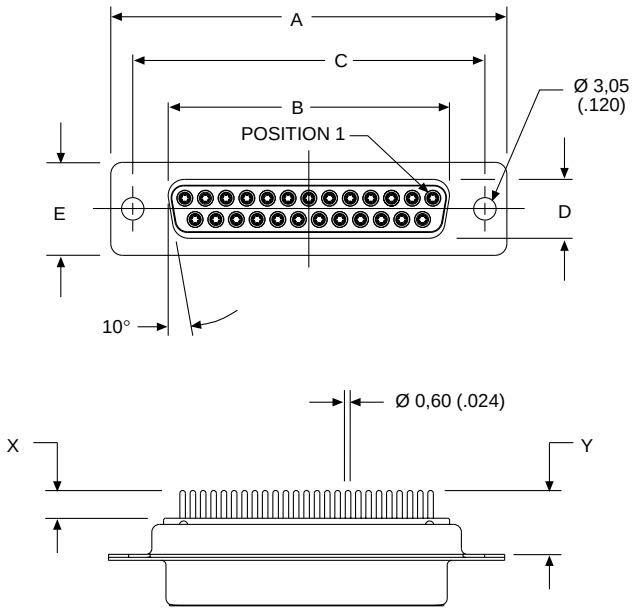

DD Configuration

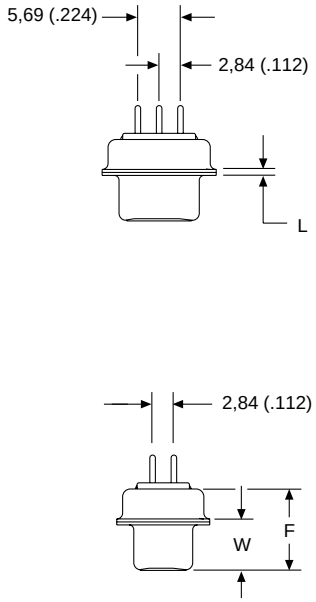

Dimensions

Shell Size	A ±0,38 (.015)	B ±0,13 (.005)	C ±0,13 (.005)	D ±0,13 (.005)	E ±0,38 (.015)	F ±0,25 (.010)	W ±0,38 (.015)	L ±0,25 (.010)
DE	30,81 (1.213)	16,33 (.643)	24,99 (.984)	7,90 (.311)	12,55 (.494)	10,90 (.429)	6,94 (.273)	0,76 (.030)
DA	39,14 (1.541)	24,66 (.971)	33,32 (1.312)	7,90 (.311)	12,55 (.494)	10,90 (.429)	6,94 (.273)	0,76 (.030)
DB	53,04 (2.088)	38,38 (1.511)	47,04 (1.852)	7,90 (.311)	12,55 (.494)	10,90 (.429)	6,94 (.273)	0,76 (.030)
DC	69,32 (2.729)	54,84 (2.159)	63,50 (2.500)	7,90 (.311)	12,55 (.494)	10,90 (.429)	6,94 (.273)	0,76 (.030)
DD	66,93 (2.635)	52,42 (2.064)	61,11 (2.406)	10,74 (.423)	15,37 (.605)	10,90 (.429)	6,94 (.273)	0,76 (.030)

Wrap Post Termination

Plug

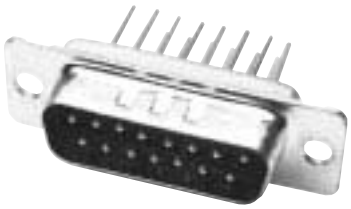

Part Numbers

Shell Size	Layout	Through Hole
DE	9	DE9P-F179A-K87
DA	15	DA15P-F179A-K87
DB	25	DB25P-F179A-K87
DC	37	DC37P-F179A-K87
DD	50	DD50P-F179A-K87

Modification Code	Number of Wraps	X max.	Y ±0,89 (.035)
F179	2	10,21 (.402)	15,20 (.598)
F179A	3	13,61 (.536)	18,60 (.732)

Selection Guide
For Product Features, Specifications, Materials and Finishes, see pages 2-3.

Reader's Resource
For contact cavity arrangements, see page 224.
For P.C. hole patterns, see page 274.
For panel cutouts, see page 221.
For hardware views (Standard), see page 226.

Engaging Face

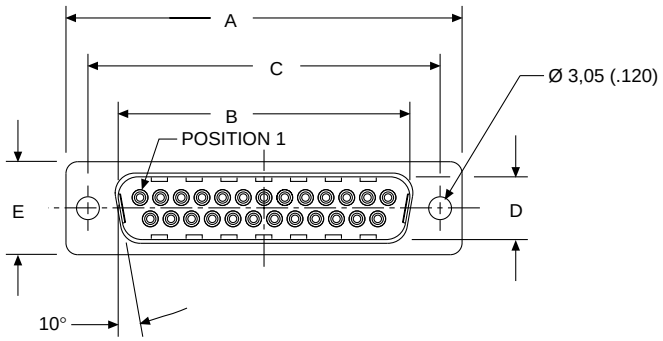

DD Configuration

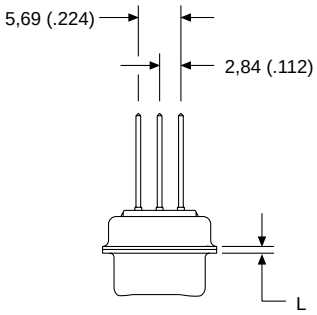

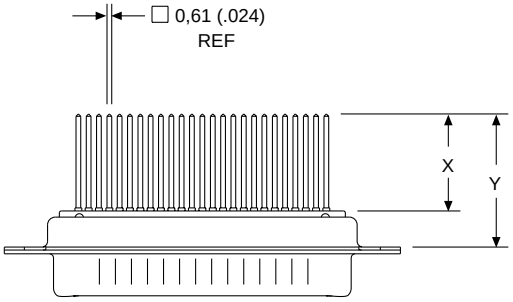

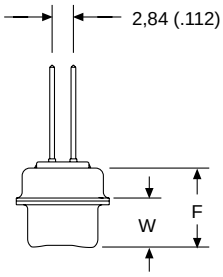

Dimensions

Shell Size	A ±0,38 (.015)	B ±0,13 (.005)	C ±0,13 (.005)	D ±0,13 (.005)	E ±0,38 (.015)	F ±0,25 (.010)	W ±0,368 (.0145)	W ±0,41 (.016)	L ±0,25 (.010)
DE	30,81 (1.213)	16,92 (.666)	24,99 (.984)	8,36 (.329)	12,55 (.494)	10,72 (.422)	6,693 (.2635)	—	0,76 (.030)
DA	39,14 (1.541)	25,25 (.994)	33,32 (1.312)	8,36 (.329)	12,55 (.494)	10,72 (.422)	6,693 (.2635)	—	0,76 (.030)
DB	53,04 (2.088)	38,96 (1.534)	47,04 (1.852)	8,36 (.329)	12,55 (.494)	10,82 (.426)	—	6,64 (.269)	0,99 (.039)
DC	69,32 (2.729)	55,42 (2.182)	63,50 (2.500)	8,36 (.329)	12,55 (.494)	10,82 (.426)	—	6,64 (.269)	0,99 (.039)
DD	66,93 (2.635)	52,81 (2.079)	61,11 (2.406)	11,07 (.436)	15,37 (.605)	10,82 (.426)	—	6,64 (.269)	0,99 (.039)

Dimensions are shown in mm (inch)
Dimensions subject to change

Wrap Post Termination

Receptacle

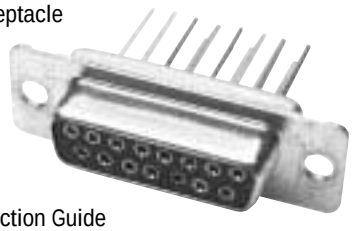

Selection Guide
For Product Features, Specifications, Materials and Finishes, see pages 2-3.

Reader's Resource
For contact cavity arrangements, see page 224.
For P.C. hole patterns, see page 274.
For panel cutouts, see page 221.
For hardware views (Standard), see page 226.

Part Numbers

Shell Size	Layout	Through Hole
DE	9	DE9S-F179A-A197
DA	15	DA15S-F179A-A197
DB	25	DB25S-F179A-A197
DC	37	DC37S-F179A-A197
DD	50	DD50S-F179A-A197

Modification Code	Number of Wraps	X max.	Y ±0,89 (.035)
F179	2	10,21 (.402)	15,20 (.598)
F179A	3	13,61 (.536)	18,60 (.732)

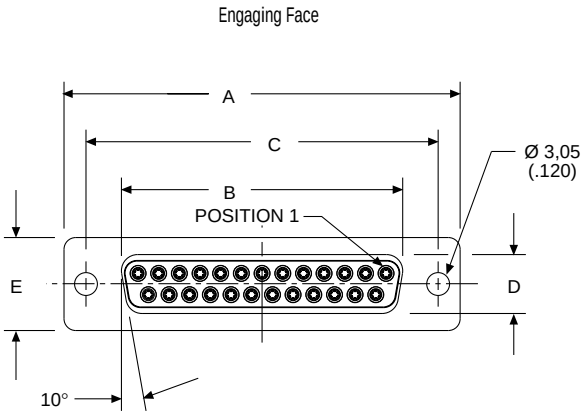

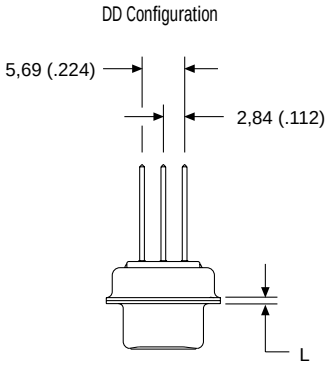

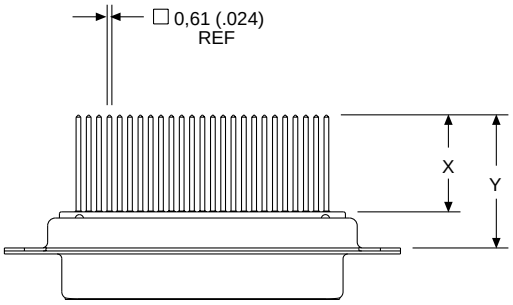

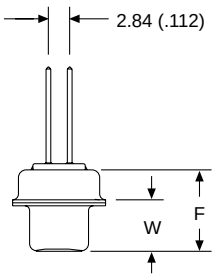

Dimensions

Shell Size	A ±0,13 (.005)	B ±0,13 (.005)	C ±0,13 (.005)	D ±0,13 (.005)	E ±0,38 (.015)	F ±0,25 (.010)	W ±0,38 (.015)	L ±0,25 (.010)
DE	30,81 (1.213)	16,33 (.643)	24,99 (.984)	7,90 (.311)	12,55 (.494)	10,90 (.429)	6,94 (.273)	0,76 (.030)
DA	39,14 (1.541)	24,66 (.971)	33,32 (1.312)	7,90 (.311)	12,55 (.494)	10,90 (.429)	6,94 (.273)	0,76 (.030)
DB	53,04 (2.088)	38,38 (1.511)	47,04 (1.852)	7,90 (.311)	12,55 (.494)	10,90 (.429)	6,94 (.273)	0,76 (.030)
DC	69,32 (2.729)	54,84 (2.159)	63,50 (2.500)	7,90 (.311)	12,55 (.494)	10,90 (.429)	6,94 (.273)	0,76 (.030)
DD	66,93 (2.635)	52,42 (2.064)	61,11 (2.406)	10,74 (.423)	15,37 (.605)	10,90 (.429)	6,94 (.273)	0,76 (.030)

D*M — 90° Solder Termination (Machined) — Standard Footprint .318♦ or .283 inch♦♦

See pages 16-17.

D*M 90° PCB connectors, designed to be comparable to MIL-C-24308 (except for finishes), for use with printed circuit boards in demanding applications. Additional contact lengths, hardware and finish options available; consult factory for details.

Product Features

- 7.5 A current capacity
- Machined contacts
- Two contact finishes
- Metal bracket with threaded insert standard
- Optional screw locks and boardlocks
- UL file number E8572
- Dimensionally compatible with Combo D®

ZED* — 90° Solder Termination (Stamped) — Standard Footprint .318 inch♦

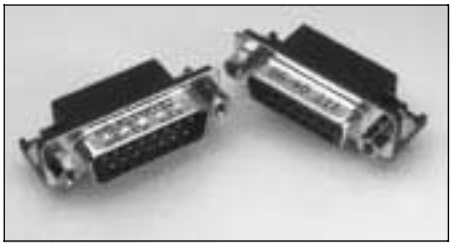

See pages 18-19.

ZED* 90° connectors are available for applications where price is the primary driver. They are available with integrated plastic brackets with Standard footprints.

Product Features

- Stamped contacts with 5 A current capacity
- Economical
- Plastic bracket with integrated boardlocks and grounding strap
- Optional screw locks

D* — 90° Solder Termination (Machined) — European Footprint 10,2♦ or 9,4 mm♦♦

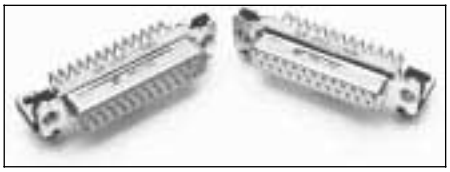

See pages 20-27.

D* 90° connectors are available for high performance uses according to DIN 41652. Available with European footprint 1AON contacts, plastic and metal brackets, #4-40 or M3 threads and stamped pushfits/boardlocks. Contact finish available in 2 performance classes.

Product Features

- High performance commercial class connectors
- Two contact performance classes
- Optional metal and plastic brackets, threaded standoffs, clinch nuts, and stamped pushfits/boardlocks
- Tin plated contact PC tails (pin & socket)

ZD* — 90° Solder Termination (Stamped) — European Footprint 10,2 mm♦

See pages 28-29.

ZD* 90° connectors are available for applications where price is the primary driver. They are available with integrated plastic brackets with European footprints.

Product Features

- Stamped contacts with 5 A current capacity
- Economical
- Plastic bracket with integrated boardlocks and grounding strap
- Optional screw locks

♦ Connector footprint measured from the front shell.
♦♦ Connector footprint measured from the rear shell.

Dimensions are shown in mm (inch)
Dimensions subject to change

Specifications

Temperature Rating	−55°C to 125°C
Current Rating	7.5 A
Contact Resistance	55 millivolt max. at 7.5 A test current
Dielectric Withstanding Voltage	1000 VAC at Sea Level

Materials and Finishes

Description	Material	Finish
Shell	Steel	Tin
Insulator	Thermoplastic, UL 94V-0	None (Color: dark green)
Pin Contact	Copper Alloy	Gold over Nickel
Socket Contact	Copper Alloy	Gold over Nickel in mating area, Tin on balance
Hardware (except Boardlocks)	Steel	Tin
Boardlocks	Copper Alloy	Tin

Specifications

Temperature Rating	−55°C to 105°C
Current Rating	5 A
Contact Resistance	15 mΩ
Dielectric Withstanding Voltage	1000 VAC at Sea Level

Materials and Finishes

Description	Material	Finish
Shell	Steel	Tin
Insulator	Thermoplastic, UL 94V-0	None
Contacts	Copper Alloy	Gold over Nickel in mating area, Tin on balance

Specifications

Temperature Rating	−55°C to +125°C
Current Rating	5 A
Contact Resistance	10 mΩ
Dielectric Withstanding Voltage	1250 VAC at Sea Level

Materials and Finishes

Description	Material	Finish
Shell	Steel	Tin
Insulator	Thermoplastic, UL 94V-0	None (Color: dark green)
Contacts	Copper Alloy	Gold over Nickel in mating area, Tin on balance
Hardware	Steel or Plastic	Tin or None
Boardlocks	Copper Alloy	Tin

Specifications

Temperature Rating	−55°C to 105°C
Current Rating	5 A
Contact Resistance	15 mΩ
Dielectric Withstanding Voltage	1000 VAC at Sea Level

Materials and Finishes

Description	Material	Finish
Shell	Steel	Tin
Insulator	Thermoplastic, UL 94V-0	None
Contacts	Copper Alloy	Gold over Nickel in mating area, Tin on balance

90° Solder Termination (Machined) — Standard Footprint .318♦ or .283 inch♦♦

Plug

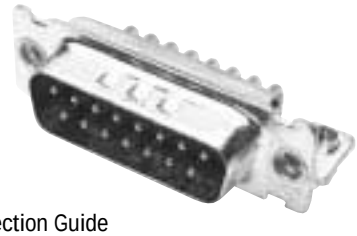

Selection Guide
For Product Features, Specifications, Materials and Finishes, see pages 14-15.

Reader's Resource
For contact cavity arrangements, see page 224.
For P.C. hole patterns, see page 272.
For panel cutouts, see page 221.
For hardware views (Standard), see page 226.
For alternate bracket configuration (when connectors are supplied without boardlocks), see page 226.

Part Numbers

Shell Size	Layout	Bracket	Bracket & Boardlock	Bracket & Screw Lock #4-40 UNC	Bracket, Boardlock & Screw Lock #4-40 UNC
DE	9	DEMP9PJK87	DEMCP9PJK87	DEMD9PJK87	DEMG9PJK87
DA	15	DAMP15PJK87	DAMC15PJK87	DAMD15PJK87	DAMG15PJK87
DB	25	DBMP25PJK87	DBMC25PJK87	DBMD25PJK87	DBMG25PJK87
DC	37	DCMP37PJK87	DCMC37PJK87	DCMD37PJK87	DCMG37PJK87
DD	50	DDMP50PJK87	DDMC50PJK87	DDMD50PJK87	DDMG50PJK87

Note: For contacts with 30 microinches gold substitute K127 for K87. Example: DAMG15PJK127

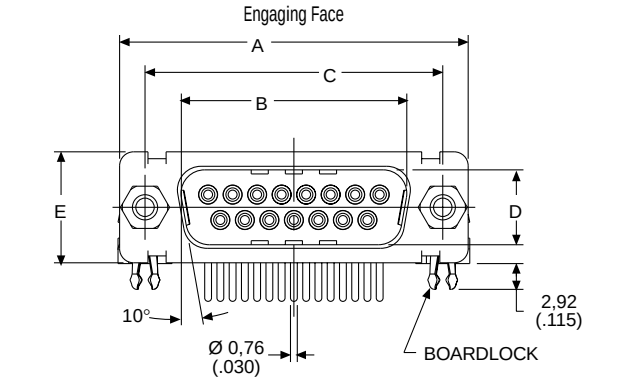

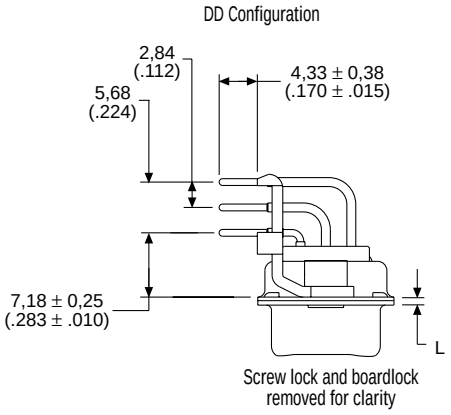

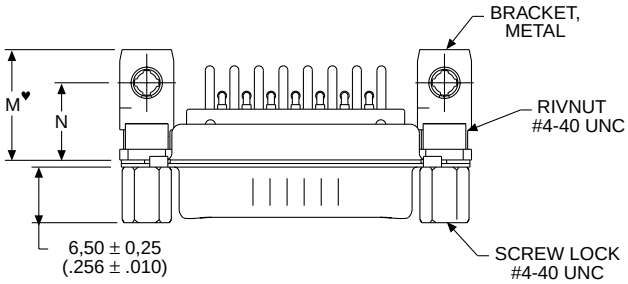

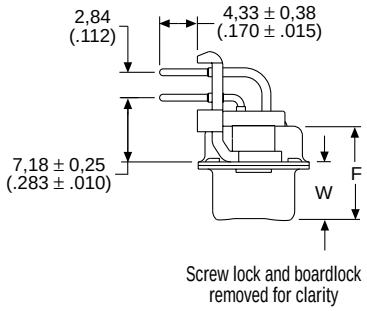

Note: ♥ Dimension varies with alternate bracket configuration. See Reader's Resource page 226.

Dimensions

Shell Size	A ±0,38 (.015)	B ±0,13 (.005)	C ±0,13 (.005)	D ±0,13 (.005)	E ±0,38 (.015)	F ±0,25 (.010)	W ±0,368 (.0145)	W ±0,41 (.016)	L ±0,25 (.010)	M ±0,25 (.010)	N ±0,25 (.010)
DE	30,81 (1.213)	16,92 (.666)	24,99 (.984)	8,36 (.329)	12,55 (.494)	10,72 (.422)	6,693 (.2635)	—	0,76 (.030)	12,34 (.486)	8,64 (.340)
DA	39,14 (1.541)	25,25 (.994)	33,32 (1.312)	8,36 (.329)	12,55 (.494)	10,72 (.422)	6,693 (.2635)	—	0,76 (.030)	12,34 (.486)	8,64 (.340)
DB	53,04 (2.088)	38,96 (1.534)	47,04 (1.852)	8,36 (.329)	12,55 (.494)	10,82 (.426)	—	6,84 (.269)	0,99 (.039)	12,34 (.486)	8,64 (.340)
DC	69,32 (2.729)	55,42 (2.182)	63,50 (2.500)	8,36 (.329)	12,55 (.494)	10,82 (.426)	—	6,84 (.269)	0,99 (.039)	12,34 (.486)	8,64 (.340)
DD	66,93 (2.635)	52,81 (2.079)	61,11 (2.406)	11,07 (.436)	15,37 (.605)	10,82 (.426)	—	6,84 (.269)	0,99 (.039)	13,74 (.541)	10,06 (.396)

♦ Connector footprint measured from the front shell.
♦♦ Connector footprint measured from the rear shell.

Dimensions are shown in mm (inch)
Dimensions subject to change

90° Solder Termination (Machined) — Standard Footprint .318♦ or .283 inch♦♦

Receptacle

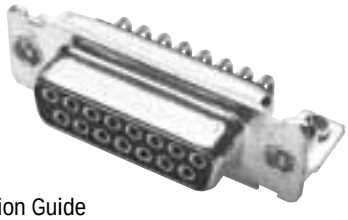

Selection Guide
For Product Features, Specifications, Materials and Finishes, see pages 14-15.

Reader's Resource
For contact cavity arrangements, see page 224.
For P.C. hole patterns, see page 272.
For panel cutouts, see page 221.
For hardware views (Standard), see page 226.
For alternate bracket configuration (when connectors are supplied without boardlocks), see page 226.

Part Numbers

Shell Size	Layout	Bracket	Bracket & Boardlock	Bracket & Screw Lock #4-40 UNC	Bracket, Boardlock & Screw Lock #4-40 UNC
DE	9	DEMP9SJA197	DEMC9SJA197	DEMD9SJA197	DEMG9SJA197
DA	15	DAMP15SJA197	DAMC15SJA197	DAMD15SJA197	DAMG15SJA197
DB	25	DBMP25SJA197	DBMC25SJA197	DBMD25SJA197	DBMG25SJA197
DC	37	DCMP37SJA197	DCMC37SJA197	DCMD37SJA197	DCMG37SJA197
DD	50	DDMP50SJA197	DDMC50SJA197	DDMD50SJA197	DDMG50SJA197

Note: For contacts with 30 microinches gold substitute K126 for A197. Example: DAMG15SJK126

Engaging Face

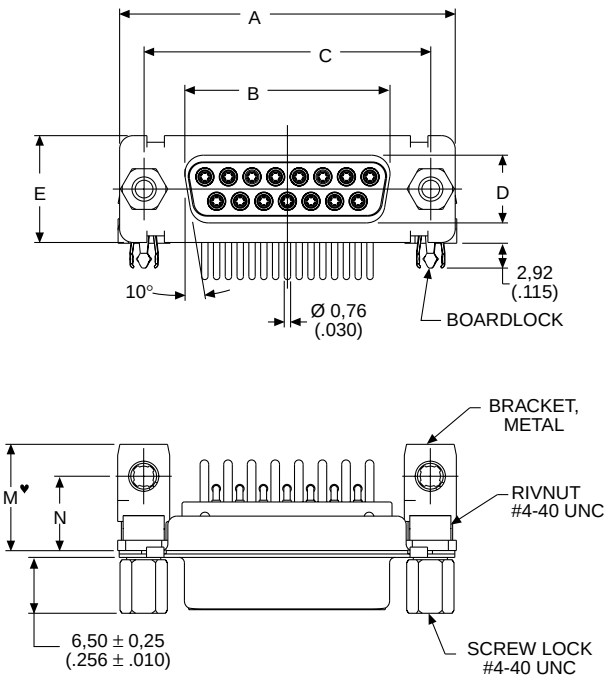

DD Configuration

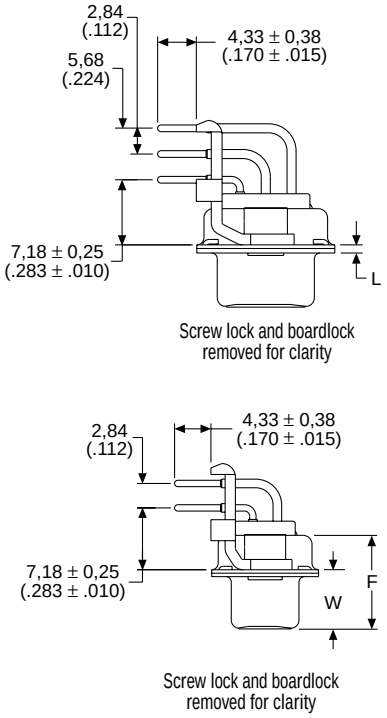

Note: ♥ Dimension varies with alternate bracket configuration. See Reader's Resource page 226.

Dimensions

Shell Size	A ±0,38 (.015)	B ±0,13 (.005)	C ±0,13 (.005)	D ±0,13 (.005)	E ±0,38 (.015)	F ±0,25 (.010)	W ±0,38 (.015)	L ±0,25 (.010)	M ±0,25 (.010)	N ±0,25 (.010)
DE	30,81 (1.213)	16,33 (.643)	24,99 (.984)	7,90 (.311)	12,55 (.494)	10,90 (.429)	6,94 (.273)	0,76 (.030)	12,34 (.486)	8,64 (.340)
DA	39,14 (1.541)	24,66 (.971)	33,32 (1.312)	7,90 (.311)	12,55 (.494)	10,90 (.429)	6,94 (.273)	0,76 (.030)	12,34 (.486)	8,64 (.340)
DB	53,04 (2.088)	38,38 (1.511)	47,04 (1.852)	7,90 (.311)	12,55 (.494)	10,90 (.429)	6,94 (.273)	0,76 (.030)	12,34 (.486)	8,64 (.340)
DC	69,32 (2.729)	54,84 (2.159)	63,50 (2.500)	7,90 (.311)	12,55 (.494)	10,90 (.429)	6,94 (.273)	0,76 (.030)	12,34 (.486)	8,64 (.340)
DD	66,93 (2.635)	52,42 (2.064)	61,11 (2.406)	10,74 (.423)	15,37 (.605)	10,90 (.429)	6,94 (.273)	0,76 (.030)	13,74 (.541)	10,06 (.396)

♦ Connector footprint measured from the front shell.
♦♦ Connector footprint measured from the rear shell.

90° Solder Termination (Stamped) — Standard Footprint .318 inch

Plug

Selection Guide
For Product Features, Specifications, Materials and Finishes, see pages 14-15.

Reader's Resource
For contact cavity arrangements, see page 224.
For P.C. hole patterns, see page 272.
For panel cutouts, see page 221.
For hardware views (Standard), see page 226.

Part Numbers

Shell Size	Layout	Plastic Bracket, Integrated Grounding Strap, Boardlock, Threaded Insert #4-40 UNC	Plastic Bracket, Integrated Grounding Strap, Boardlock, Screw Lock #4-40 UNC
DE	9	ZEDEL9PBA	ZEDE9PBA
DA	15	ZEDAL15PBA	ZEDA15PBA
DB	25	ZEDBL25PBA	ZEDB25PBA
DC	37	ZEDCL37PBA	ZEDC37PBA

Note: For contacts with 30 microinches of gold add -30. Example: ZEDEL9PBA-30

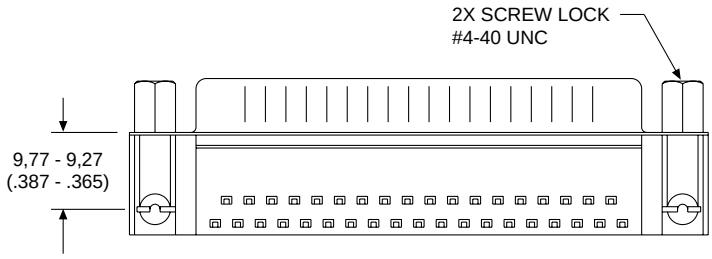

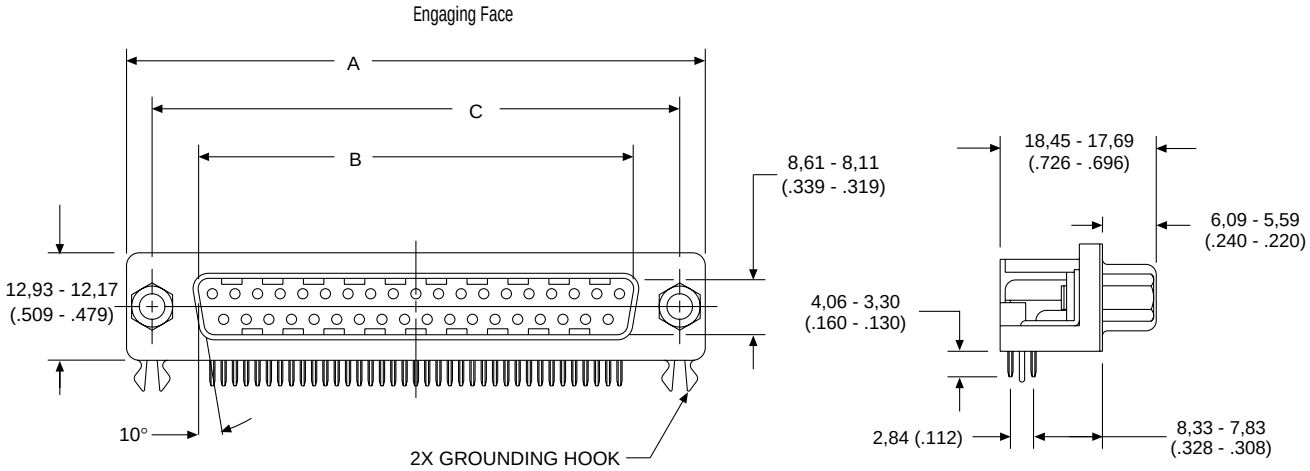

Dimensions

Shell Size	A ±0,38 (.015)	B ±0,25 (.010)	C ±0,25 (.010)
DE	30,89 (1.216)	16,92 (.666)	24,99 (.984)
DA	39,09 (1.539)	25,25 (.994)	33,32 (1.312)
DB	53,09 (2.090)	38,96 (1.534)	47,04 (1.852)
DC	69,40 (2.732)	55,42 (2.182)	63,50 (2.500)

Dimensions are shown in mm (inch)
Dimensions subject to change

90° Solder Termination (Stamped) — Standard Footprint .318 inch

Receptacle

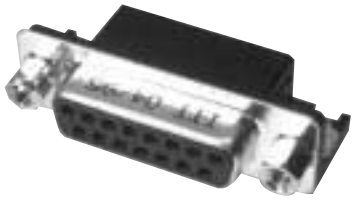

Selection Guide
For Product Features, Specifications, Materials and Finishes, see pages 14-15.

Reader's Resource
For contact cavity arrangements, see page 224.
For P.C. hole patterns, see page 272.
For panel cutouts, see page 221.
For hardware views (Standard), see page 226.

Part Numbers

Shell Size	Layout	Plastic Bracket, Integrated Grounding Strap, Boardlock, Threaded Insert #4-40 UNC	Plastic Bracket, Integrated Grounding Strap, Boardlock, Screw Lock #4-40 UNC
DE	9	ZEDEL9SBA	ZEDE9SBA
DA	15	ZEDAL15SBA	ZEDA15SBA
DB	25	ZEDBL25SBA	ZEDB25SBA
DC	37	ZEDCL37SBA	ZEDC37SBA

Note: For contacts with 30 microinches gold add -30. Example: ZEDEL9SBA-30

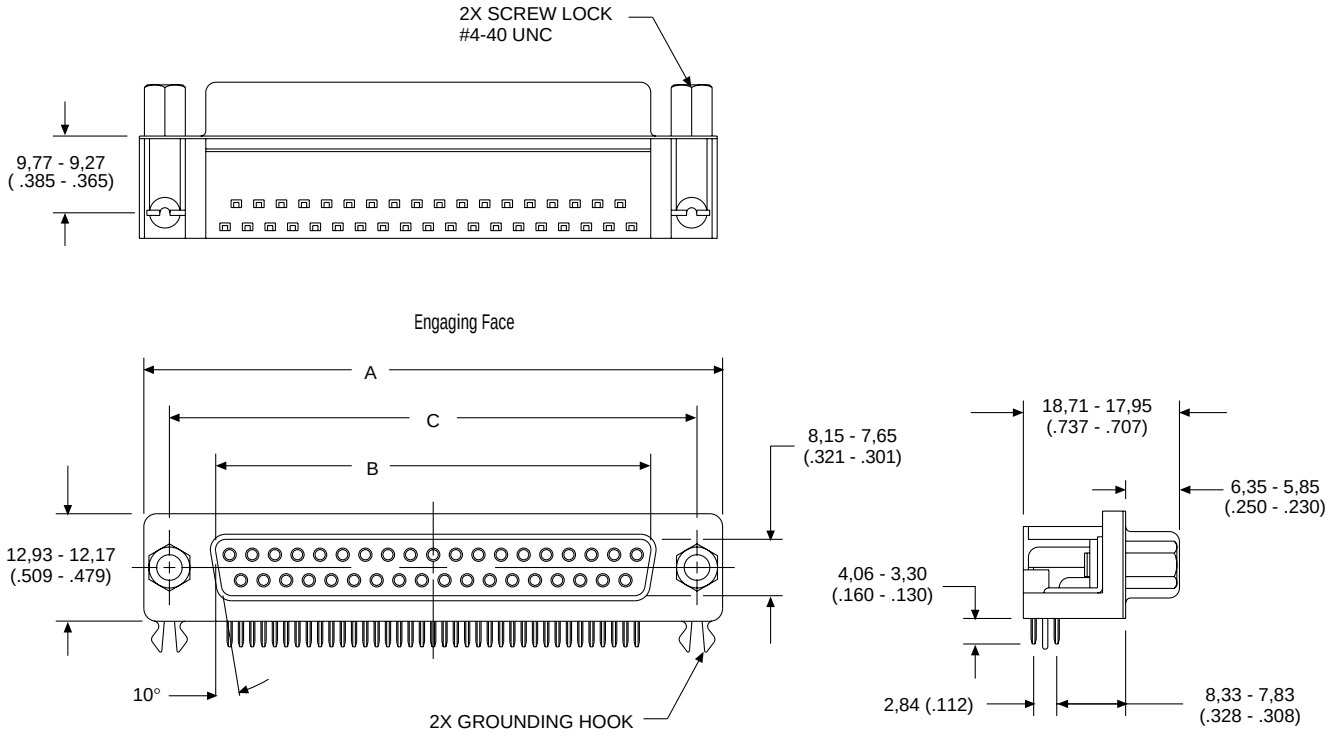

Dimensions

Shell Size	A ±0,38 (.015)	B ±0,25 (.010)	C ±0,25 (.010)
DE	30,89 (1.216)	16,28 (.641)	24,99 (.984)
DA	39,09 (1.539)	24,66 (.971)	33,32 (1.312)
DB	53,09 (2.090)	38,38 (1.511)	47,04 (1.852)
DC	69,40 (2.732)	54,84 (2.159)	63,50 (2.500)

90° Solder Termination (Machined) — European Footprint 10,2♦ or 9,4 mm♦♦

Plug

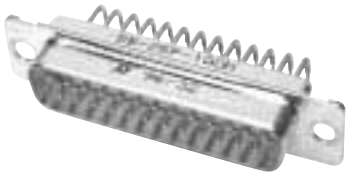

Part Numbers

Shell Size	Layout	Through Hole
DE	9	DE9P-1A0N-K87
DA	15	DA15P-1A0N-K87
DB	25	DB25P-1A0N-K87
DC	37	DC37P-1A0N-K87
DD	50	DD50P-1A0N-K87

Note: For performance class 2 add -A191. Example: DE9P-1A0N-A191-K87

Selection Guide
For Product Features, Specifications, Materials and Finishes, see pages 14-15.

Reader's Resource
For contact cavity arrangements, see page 224.
For P.C. hole patterns, see page 273.
For panel cutouts, see page 221.
For hardware views (European), see page 227.

Engaging Face

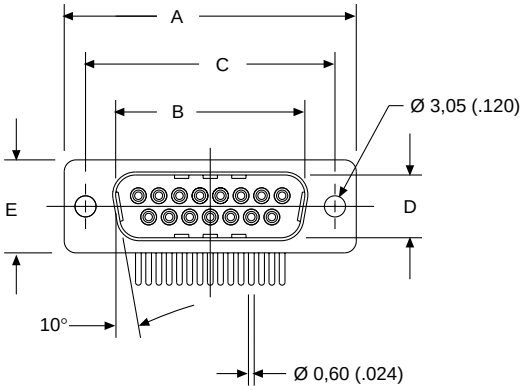

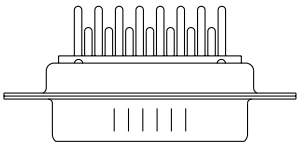

DD Configuration

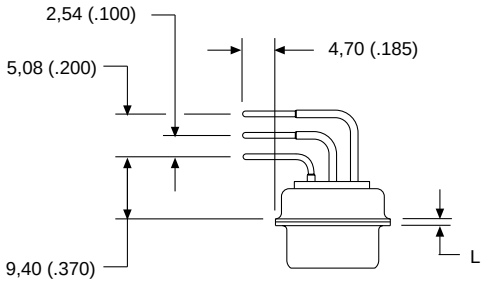

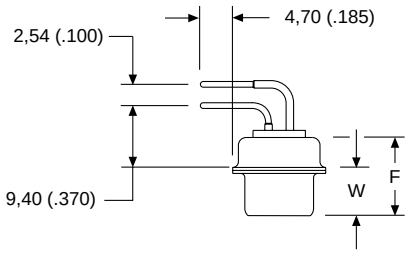

Dimensions

Shell Size	A ±0,38 (.015)	B ±0,13 (.005)	C ±0,13 (.005)	D ±0,13 (.005)	E ±0,38 (.015)	F ±0,25 (.010)	W ±0,368 (.0145)	W ±0,41 (.016)	L ±0,25 (.010)
DE	30,81 (1.213)	16,92 (.666)	24,99 (.984)	8,36 (.329)	12,55 (.494)	10,72 (.422)	6,693 (.2635)	—	0,76 (.030)
DA	39,14 (1.541)	25,25 (.994)	33,32 (1.312)	8,36 (.329)	12,55 (.494)	10,72 (.422)	6,693 (.2635)	—	0,76 (.030)
DB	53,04 (2.088)	38,96 (1.534)	47,04 (1.852)	8,36 (.329)	12,55 (.494)	10,82 (.426)	—	6,84 (.269)	0,99 (.039)
DC	69,32 (2.729)	55,42 (2.182)	63,50 (2.500)	8,36 (.329)	12,55 (.494)	10,82 (.426)	—	6,84 (.269)	0,99 (.039)
DD	66,93 (2.635)	52,81 (2.079)	61,11 (2.406)	11,07 (.436)	15,37 (.605)	10,82 (.426)	—	6,84 (.269)	0,99 (.039)

♦ Connector footprint measured from the front shell.
♦♦ Connector footprint measured from the rear shell.

Dimensions are shown in mm (inch)
Dimensions subject to change

90° Solder Termination (Machined) — European Footprint 10,2♦ or 9,4 mm♦♦

Receptacle

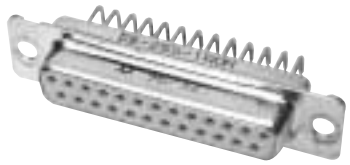

Part Numbers

Shell Size	Layout	Through Hole
DE	9	DE9S-1AON-A197
DA	15	DA15S-1AON-A197
DB	25	DB25S-1AON-A197
DC	37	DC37S-1AON-A197
DD	50	DD50S-1AON-A197

Note: For performance class 2 add -A191. Example: DE9S-1AON-A191-A197

Selection Guide
For Product Features, Specifications, Materials and Finishes, see pages 14-15.

Reader's Resource
For contact cavity arrangements, see page 224.
For P.C. hole patterns, see page 273.
For panel cutouts, see page 221.
For hardware views (European), see page 227.

Engaging Face

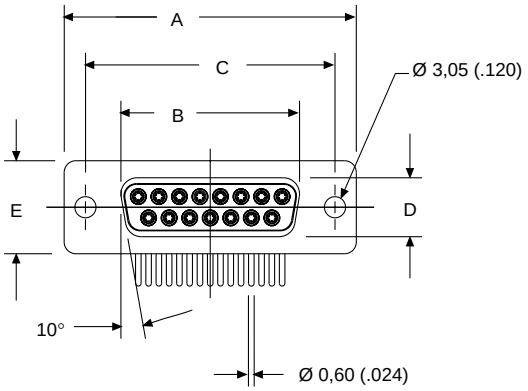

DD Configuration

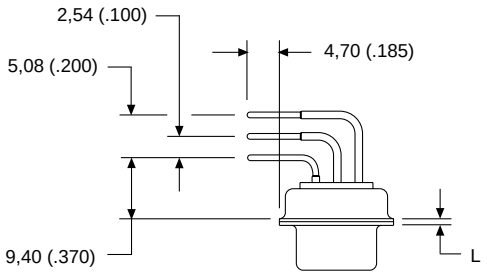

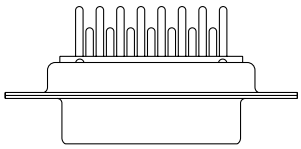

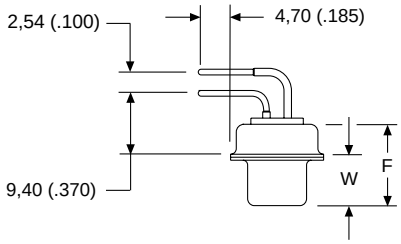

Dimensions

Shell Size	A ±0,38 (.015)	B ±0,13 (.005)	C ±0,13 (.005)	D ±0,13 (.005)	E ±0,38 (.015)	F ±0,25 (.010)	W ±0,38 (.015)	L ±0,25 (.010)
DE	30,81 (1.213)	16,33 (.643)	24,99 (.984)	7,90 (.311)	12,55 (.494)	10,90 (.429)	6,94 (.273)	0,76 (.030)
DA	39,14 (1.541)	24,66 (.971)	33,32 (1.312)	7,90 (.311)	12,55 (.494)	10,90 (.429)	6,94 (.273)	0,76 (.030)
DB	53,04 (2.088)	38,38 (1.511)	47,04 (1.852)	7,90 (.311)	12,55 (.494)	10,90 (.429)	6,94 (.273)	0,76 (.030)
DC	69,32 (2.729)	54,84 (2.159)	63,50 (2.500)	7,90 (.311)	12,55 (.494)	10,90 (.429)	6,94 (.273)	0,76 (.030)
DD	66,93 (2.635)	52,42 (2.064)	61,11 (2.406)	10,74 (.423)	15,37 (.605)	10,90 (.429)	6,94 (.273)	0,76 (.030)

♦ Connector footprint measured from the front shell.
♦♦ Connector footprint measured from the rear shell.

90° Solder Termination (Machined) with Metal Bracket — European Footprint 10,2♦ or 9,4♦♦ mm

Plug

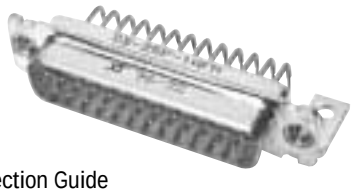

Selection Guide
For Product Features, Specifications, Materials and Finishes, see pages 14-15.

Reader's Resource
For contact cavity arrangements, see page 224.
For P.C. hole patterns, see page 273.
For panel cutouts, see page 221.
For hardware views (European), see page 227.

Part Numbers

Shell Size	Layout	Bushing with Through Hole	Captive Nut #4-40 UNC	Captive Nut M3	Post #4-40 UNC
DE	9	DE9P-1AFN-K87	DE9P-1A7N-K87	DE9P-1A9N-K87	DE9P-1A8N-K87
DA	15	DA15P-1AFN-K87	DA15P-1A7N-K87	DA15P-1A9N-K87	DA15P-1A8N-K87
DB	25	DB25P-1AFN-K87	DB25P-1A7N-K87	DB25P-1A9N-K87	DB25P-1A8N-K87
DC	37	DC37P-1AFN-K87	DC37P-1A7N-K87	DC37P-1A9N-K87	DC37P-1A8N-K87
DD	50	DD50P-1AFN-K87	DD50P-1A7N-K87	DD50P-1A9N-K87	DD50P-1A8N-K87

Notes: For pushfit/boardlock option add -146. Example: DE9P-1AFN-K87-146
For performance class 2 add -A191. Example: DE9P-1AFN-A191-K87

Engaging Face

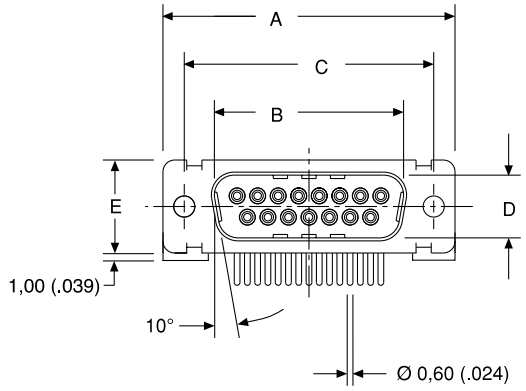

DD Configuration

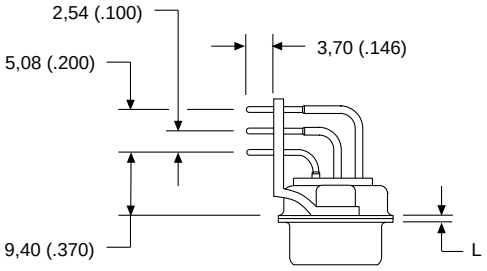

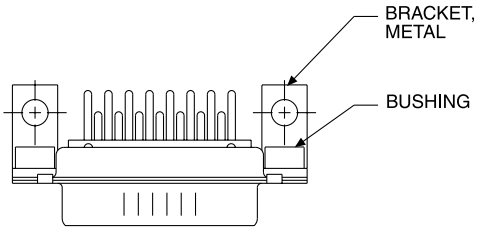

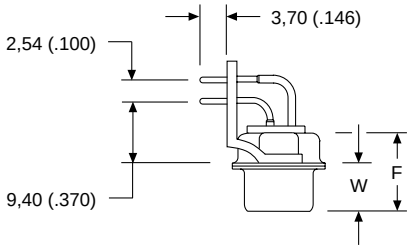

Dimensions

Shell Size	A ±0,38 (.015)	B ±0,13 (.005)	C ±0,13 (.005)	D ±0,13 (.005)	E ±0.38 (.015)	F ±0.25 (.010)	W ±0,368 (.0145)	W ±0,41 (.016)	L ±0,25 (.010)
DE	30,81 (1.213)	16,92 (.666)	24,99 (.984)	8,36 (.329)	12,55 (.494)	10,72 (.422)	6,693 (.2635)	—	0,76 (.030)
DA	39,14 (1.541)	25,25 (.994)	33,32 (1.312)	8,36 (.329)	12,55 (.494)	10,72 (.422)	6,693 (.2635)	—	0,76 (.030)
DB	53,04 (2.088)	38,96 (1.534)	47,04 (1.852)	8,36 (.329)	12,55 (.494)	10,82 (.426)	—	6,84 (.269)	0,99 (.039)
DC	69,32 (2.729)	55,42 (2.182)	63,50 (2.500)	8,36 (.329)	12,55 (.494)	10,82 (.426)	—	6,84 (.269)	0,99 (.039)
DD	66,93 (2.635)	52,81 (2.079)	61,11 (2.406)	11,07 (.436)	15,37 (.605)	10,82 (.426)	—	6,84 (.269)	0,99 (.039)

♦ Connector footprint measured from the front shell.
♦♦ Connector footprint measured from the rear shell.

Dimensions are shown in mm (inch)
Dimensions subject to change

90° Solder Termination (Machined) with Metal Bracket — European Footprint 10,2♦ or 9,4♦♦ mm

Receptacle

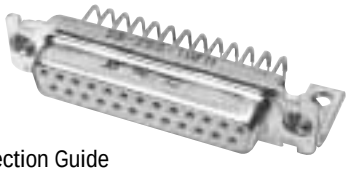

Selection Guide
For Product Features, Specifications, Materials and Finishes, see pages 14-15.

Reader's Resource
For contact cavity arrangements, see page 224.
For P.C. hole patterns, see page 273.
For panel cutouts, see page 221.
For hardware views (European), see page 227.

Part Numbers

Shell Size	Layout	Bushing with Through Hole	Captive Nut #4-40 UNC	Captive Nut M3	Post #4-40 UNC
DE	9	DE9S-1AFN-A197	DE9S-1A7N-A197	DE9S-1A9N-A197	DE9S-1A8N-A197
DA	15	DA15S-1AFN-A197	DA15S-1A7N-A197	DA15S-1A9N-A197	DA15S-1A8N-A197
DB	25	DB25S-1AFN-A197	DB25S-1A7N-A197	DB25S-1A9N-A197	DB25S-1A8N-A197
DC	37	DC37S-1AFN-A197	DC37S-1A7N-A197	DC37S-1A9N-A197	DC37S-1A8N-A197
DD	50	DD50S-1AFN-A197	DD50S-1A7N-A197	DD50S-1A9N-A197	DD50S-1A8N-A197

Notes: For pushfit/boardlock option add -146. Example: DE9S-1AFN-A197-146
For performance class 2 add -A191. Example: DE9S-1AFN-A191-A197

Engaging Face

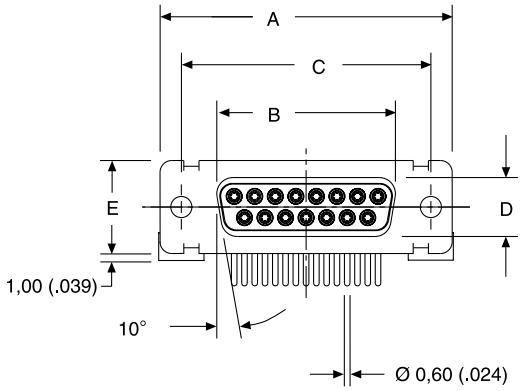

DD Configuration

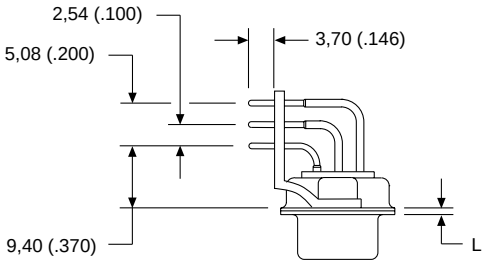

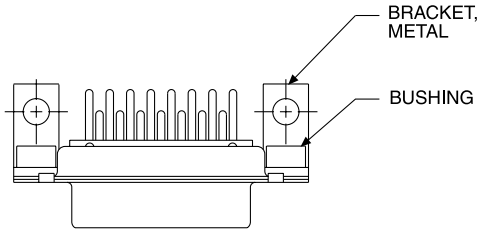

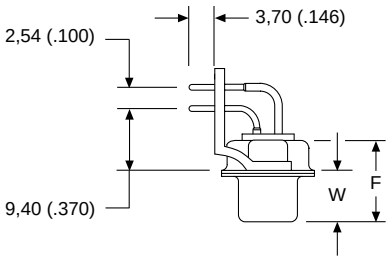

Dimensions

Shell Size	A ±0,38 (.015)	B ±0,13 (.005)	C ±0,13 (.005)	D ±0,13 (.005)	E ±0,38 (.015)	F ±0,25 (.010)	W ±0,38 (.015)	L ±0,25 (.010)
DE	30,81 (1.213)	16,33 (.643)	24,99 (.984)	7,90 (.311)	12,55 (.494)	10,90 (.429)	6,94 (.273)	0,76 (.030)
DA	39,14 (1.541)	24,66 (.971)	33,32 (1.312)	7,90 (.311)	12,55 (.494)	10,90 (.429)	6,94 (.273)	0,76 (.030)
DB	53,04 (2.088)	38,38 (1.511)	47,04 (1.852)	7,90 (.311)	12,55 (.494)	10,90 (.429)	6,94 (.273)	0,76 (.030)
DC	69,32 (2.729)	54,84 (2.159)	63,50 (2.500)	7,90 (.311)	12,55 (.494)	10,90 (.429)	6,94 (.273)	0,76 (.030)
DD	66,93 (2.635)	52,42 (2.064)	61,11 (2.406)	10,74 (.423)	15,37 (.605)	10,90 (.429)	6,94 (.273)	0,76 (.030)

♦ Connector footprint measured from the front shell.
♦♦ Connector footprint measured from the rear shell.

90° Solder Termination (Machined) with Plastic Bracket and Grounding Strap — European Footprint 10,2♦ or 9,4 mm♦♦

Plug

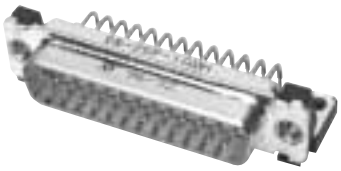

Selection Guide
For Product Features, Specifications, Materials and Finishes, see pages 14-15.

Reader's Resource
For contact cavity arrangements, see page 224.
For P.C. hole patterns, see page 273.
For panel cutouts, see page 221.
For hardware views (European), see page 227.

Part Numbers

Shell Size	Layout	Through Hole	Captive Nut #4-40 UNC	Captive Nut M3	Post #4-40 UNC
DE	9	DE9P-1ADN-K87	DE9P-1AWN-K87	DE9P-1AVN-K87	DE9P-1AJN-K87
DA	15	DA15P-1ADN-K87	DA15P-1AWN-K87	DA15P-1AVN-K87	DA15P-1AJN-K87
DB	25	DB25P-1ADN-K87	DB25P-1AWN-K87	DB25P-1AVN-K87	DB25P-1AJN-K87
DC	37	DC37P-1ADN-K87	DC37P-1AWN-K87	DC37P-1AVN-K87	DC37P-1AJN-K87
DD	50	DD50P-1ADN-K87	DD50P-1AWN-K87	DD50P-1AVN-K87	DD50P-1AJN-K87

Notes: For pushfit/boardlock option add -146. Example: DE9P-1ADN-K87-146
For performance class 2 add -A191. Example: DE9P-1ADN-A191-K87

Engaging Face

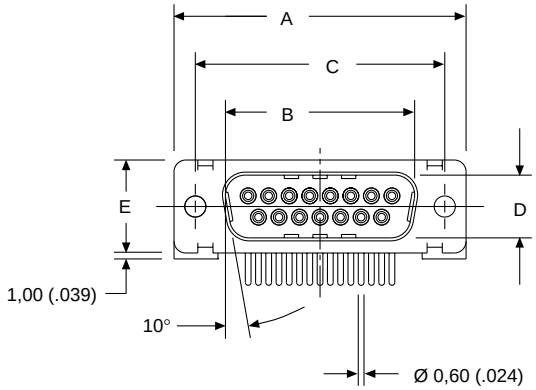

DD Configuration

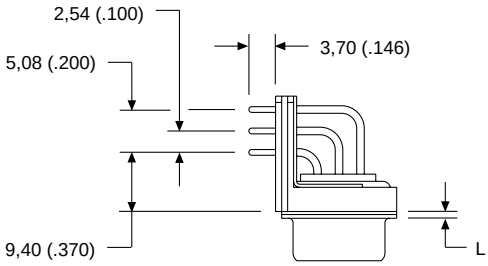

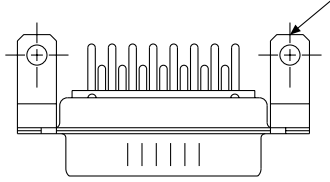

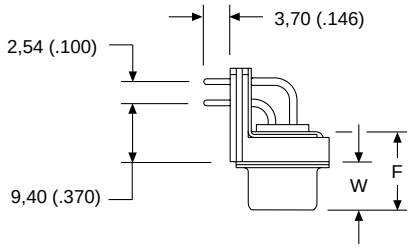

Dimensions

Shell Size	A ±0,38 (.015)	B ±0,13 (.005)	C ±0,13 (.005)	D ±0,13 (.005)	E ±0.38 (.015)	F ±0,25 (.010)	W ±0,368 (.0145)	W ±0,41 (.016)	L ±0,25 (.010)
DE	30,81 (1.213)	16,92 (.666)	24,99 (.984)	8,36 (.329)	12,55 (.494)	10,72 (.422)	6,693 (.2635)	—	0,76 (.030)
DA	39,14 (1.541)	25,25 (.994)	33,32 (1.312)	8,36 (.329)	12,55 (.494)	10,72 (.422)	6,693 (.2635)	—	0,76 (.030)
DB	53,04 (2.088)	38,96 (1.534)	47,04 (1.852)	8,36 (.329)	12,55 (.494)	10,82 (.426)	—	6,84 (.269)	0,99 (.039)
DC	69,32 (2.729)	55,42 (2.182)	63,50 (2.500)	8,36 (.329)	12,55 (.494)	10,82 (.426)	—	6,84 (.269)	0,99 (.039)
DD	66,93 (2.635)	52,81 (2.079)	61,11 (2.406)	11,07 (.436)	15,37 (.605)	10,82 (.426)	—	6,84 (.269)	0,99 (.039)

♦ Connector footprint measured from the front shell.
♦♦ Connector footprint measured from the rear shell.

Dimensions are shown in mm (inch)
Dimensions subject to change

90° Solder Termination (Machined) with Plastic Bracket and Grounding Strap — European Footprint 10,2♦ or 9,4 mm♦♦

Receptacle

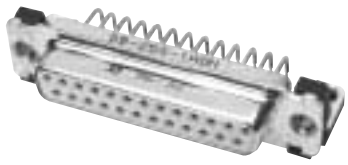

Part Numbers

Shell Size	Layout	Through Hole	Captive Nut #4-40 UNC	Captive Nut M3	Post #4-40 UNC
DE	9	DE9S-1ADN-A197	DE9S-1AWN-A197	DE9S-1AVN-A197	DE9S-1AJN-A197
DA	15	DA15S-1ADN-A197	DA15S-1AWN-A197	DA15S-1AVN-A197	DA15S-1AJN-A197
DB	25	DB25S-1ADN-A197	DB25S-1AWN-A197	DB25S-1AVN-A197	DB25S-1AJN-A197
DC	37	DC37S-1ADN-A197	DC37S-1AWN-A197	DC37S-1AVN-A197	DC37S-1AJN-A197
DD	50	DD50S-1ADN-A197	DD50S-1AWN-A197	DD50S-1AVN-A197	DD50S-1AJN-A197

Notes: For pushfit/boardlock option add -146. Example: DE9S-1ADN-A197-146
For performance class 2 add -A191. Example: DE9S-1ADN-A191-A197

Selection Guide
For Product Features, Specifications, Materials and Finishes, see pages 14-15.

Reader's Resource
For contact cavity arrangements, see page 224.
For P.C. hole patterns, see page 273.
For panel cutouts, see page 221.
For hardware views (European), see page 227.

Engaging Face

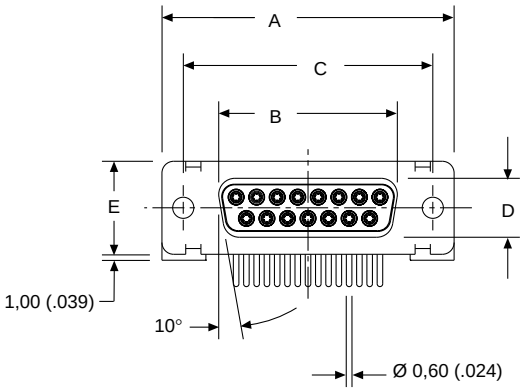

DD Configuration

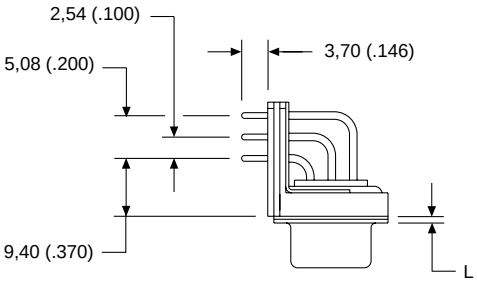

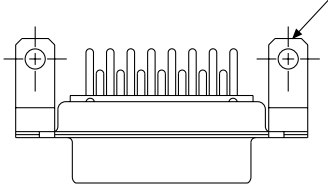

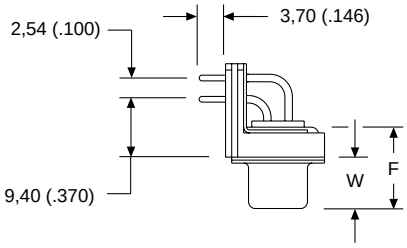

Dimensions

Shell Size	A ±0,38 (.015)	B ±0,13 (.005)	C ±0,13 (.005)	D ±0,13 (.005)	E ±0.38 (.015)	F ±0,25 (.010)	W ±0,38 (.015)	L ±0,25 (.010)
DE	30,81 (1.213)	16,33 (.643)	24,99 (.984)	7,90 (.311)	12,55 (.494)	10,90 (.429)	6,94 (.273)	0,76 (.030)
DA	39,14 (1.541)	24,66 (.971)	33,32 (1.312)	7,90 (.311)	12,55 (.494)	10,90 (.429)	6,94 (.273)	0,76 (.030)
DB	53,04 (2.088)	38,38 (1.511)	47,04 (1.852)	7,90 (.311)	12,55 (.494)	10,90 (.429)	6,94 (.273)	0,76 (.030)
DC	69,32 (2.729)	54,84 (2.159)	63,50 (2.500)	7,90 (.311)	12,55 (.494)	10,90 (.429)	6,94 (.273)	0,76 (.030)
DD	66,93 (2.635)	52,42 (2.064)	61,11 (2.406)	10,74 (.423)	15,37 (.605)	10,90 (.429)	6,94 (.273)	0,76 (.030)

♦ Connector footprint measured from the front shell.
♦♦ Connector footprint measured from the rear shell.

90° Solder Termination (Machined) with Plastic Bracket — European Footprint 10,2♦ or 9,4 mm♦♦

Plug

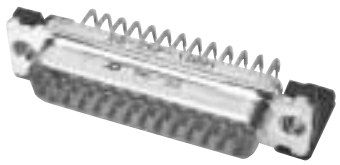

Part Numbers

Shell Size	Layout	Through Hole	Captive Nut #4-40 UNC	Captive Nut M3	Post #4-40 UNC
DE	9	DE9P-1A5N-K87	DE9P-1AUN-K87	DE9P-1ATN-K87	DE9P-1A6N-K87
DA	15	DA15P-1A5N-K87	DA15P-1AUN-K87	DA15P-1ATN-K87	DA15P-1A6N-K87
DB	25	DB25P-1A5N-K87	DB25P-1AUN-K87	DB25P-1ATN-K87	DB25P-1A6N-K87
DC	37	DC37P-1A5N-K87	DC37P-1AUN-K87	DC37P-1ATN-K87	DC37P-1A6N-K87
DD	50	DD50P-1A5N-K87	DD50P-1AUN-K87	DD50P-1ATN-K87	DD50P-1A6N-K87

Notes: For pushfit/boardlock option add -146. Example: DE9P-1A5N-K87-146
For performance class 2 add -A191. Example: DE9P-1A5N-A191-K87

Selection Guide
For Product Features, Specifications, Materials and Finishes, see pages 14-15.

Reader's Resource
For contact cavity arrangements, see page 224.
For P.C. hole patterns, see page 273.
For panel cutouts, see page 221.
For hardware views (European), see page 227.

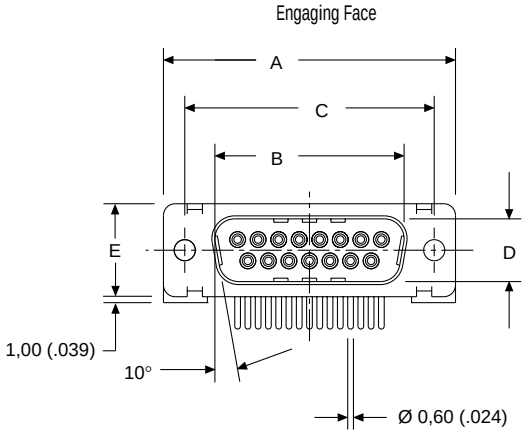

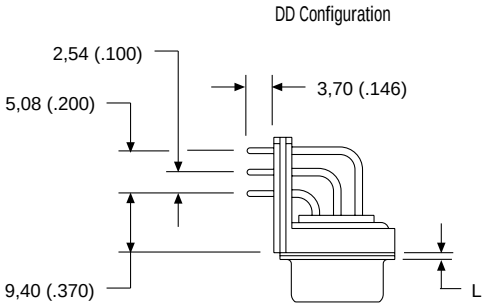

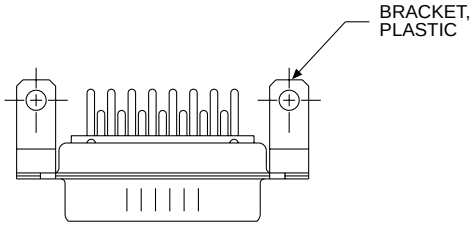

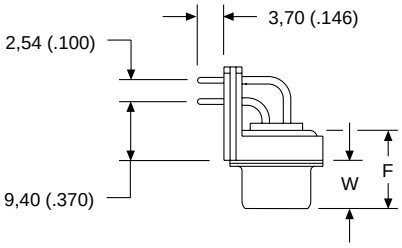

Dimensions

Shell Size	A ±0,38 (.015)	B ±0,13 (.005)	C ±0,13 (.005)	D ±0,13 (.005)	E ±0,38 (.015)	F ±0,25 (.010)	W ±0,368 (.145)	W ±0,41 (.016)	L ±0,25 (.010)
DE	30,81 (1.213)	16,92 (.666)	24,99 (.984)	8,36 (.329)	12,55 (.494)	10,72 (.422)	6,693 (.2635)	—	0,76 (.030)
DA	39,14 (1.541)	25,25 (.994)	33,32 (1.312)	8,36 (.329)	12,55 (.494)	10,72 (.422)	6,693 (.2635)	—	0,76 (.030)
DB	53,04 (2.088)	38,96 (1.534)	47,04 (1.852)	8,36 (.329)	12,55 (.494)	10,82 (.426)	—	6,84 (.269)	0,99 (.039)
DC	69,32 (2.729)	55,42 (2.182)	63,50 (2.500)	8,36 (.329)	12,55 (.494)	10,82 (.426)	—	6,84 (.269)	0,99 (.039)
DD	66,93 (2.635)	52,81 (2.079)	61,11 (2.406)	11,07 (.436)	15,37 (.605)	10,82 (.426)	—	6,84 (.269)	0,99 (.039)

♦ Connector footprint measured from the front shell.
♦♦ Connector footprint measured from the rear shell.

Dimensions are shown in mm (inch)
Dimensions subject to change

90° Solder Termination (Machined) with Plastic Bracket — European Footprint 10,2♦ or 9,4 mm♦♦

Receptacle

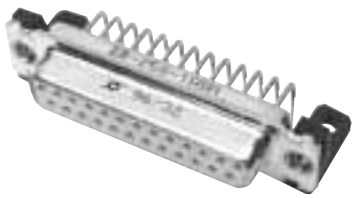

Selection Guide
For Product Features, Specifications, Materials and Finishes, see pages 14-15.

Reader's Resource
For contact cavity arrangements, see page 224.
For P.C. hole patterns, see page 273.
For panel cutouts, see page 221.
For hardware views (European), see page 227.

Part Numbers

Shell Size	Layout	Through Hole	Captive Nut #4-40 UNC	Captive Nut M3	Post #4-40 UNC
DE	9	DE9S-1A5N-A197	DE9S-1AUN-A197	DE9S-1ATN-A197	DE9S-1A6N-A197
DA	15	DA15S-1A5N-A197	DA15S-1AUN-A197	DA15S-1ATN-A197	DA15S-1A6N-A197
DB	25	DB25S-1A5N-A197	DB25S-1AUN-A197	DB25S-1ATN-A197	DB25S-1A6N-A197
DC	37	DC37S-1A5N-A197	DC37S-1AUN-A197	DC37S-1ATN-A197	DC37S-1A6N-A197
DD	50	DD50S-1A5N-A197	DD50S-1AUN-A197	DD50S-1ATN-A197	DD50S-1A6N-A197

Notes: For push/boardlock option add -146. Example: DE9S-1A5N-A197-146
For performance class 2 add -A191. Example: DE9S-1A5N-A191-A197

Engaging Face

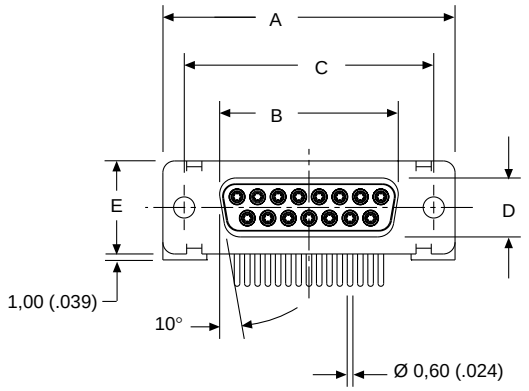

DD Configuration

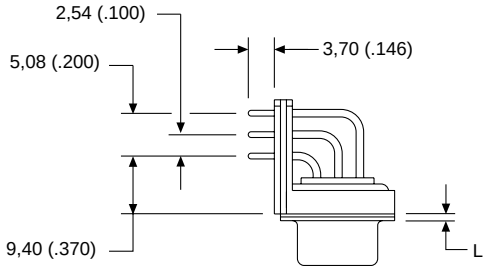

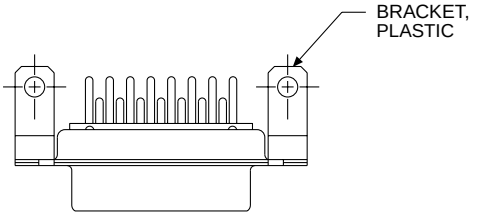

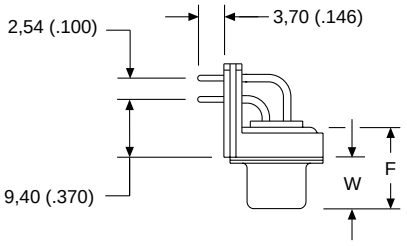

Dimensions

Shell Size	A ±0,38 (.015)	B ±0,13 (.005)	C ±0,13 (.005)	D ±0,13 (.005)	E ±0,38 (.015)	F ±0,25 (.010)	W ±0,38 (.015)	L ±0,25 (.010)
DE	30,81 (1.213)	16,33 (.643)	24,99 (.984)	7,90 (.311)	12,55 (.494)	10,90 (.429)	6,94 (.273)	0,76 (.030)
DA	39,14 (1.541)	24,66 (.971)	33,32 (1.312)	7,90 (.311)	12,55 (.494)	10,90 (.429)	6,94 (.273)	0,76 (.030)
DB	53,04 (2.088)	38,38 (1.511)	47,04 (1.852)	7,90 (.311)	12,55 (.494)	10,90 (.429)	6,94 (.273)	0,76 (.030)
DC	69,32 (2.729)	54,84 (2.159)	63,50 (2.500)	7,90 (.311)	12,55 (.494)	10,90 (.429)	6,94 (.273)	0,76 (.030)
DD	66,93 (2.635)	52,42 (2.064)	61,11 (2.406)	10,74 (.423)	15,37 (.605)	10,90 (.429)	6,94 (.273)	0,76 (.030)

♦ Connector footprint measured from the front shell.
♦♦ Connector footprint measured from the rear shell.

90° Solder Termination (Stamped) — European Footprint 10,2 mm

Plug

Selection Guide
For Product Features, Specifications, Materials and Finishes, see pages 14-15.

Reader's Resource
For contact cavity arrangements, see page 224.
For P.C. hole patterns, see page 273.
For panel cutouts, see page 221.
For hardware views (European), see page 227.

Part Numbers

Shell Size	Layout	Plastic Bracket, Integrated Grounding Strap, Boardlock, Threaded Insert #4-40 UNC	Plastic Bracket, Integrated Grounding Strap, Boardlock, Screw Lock #4-40 UNC
DE	9	ZDEL9P-1AKN-146	ZDE9P-1AKN-146
DA	15	ZDAL15P-1AKN-146	ZDA15P-1AKN-146
DB	25	ZDBL25P-1AKN-146	ZDB25P-1AKN-146
DC	37	ZDCL37P-1AKN-146	ZDC37P-1AKN-146

Note: For contacts with 30 microinches gold add -A191. Example: ZDEL9P-1AKN-A191-146

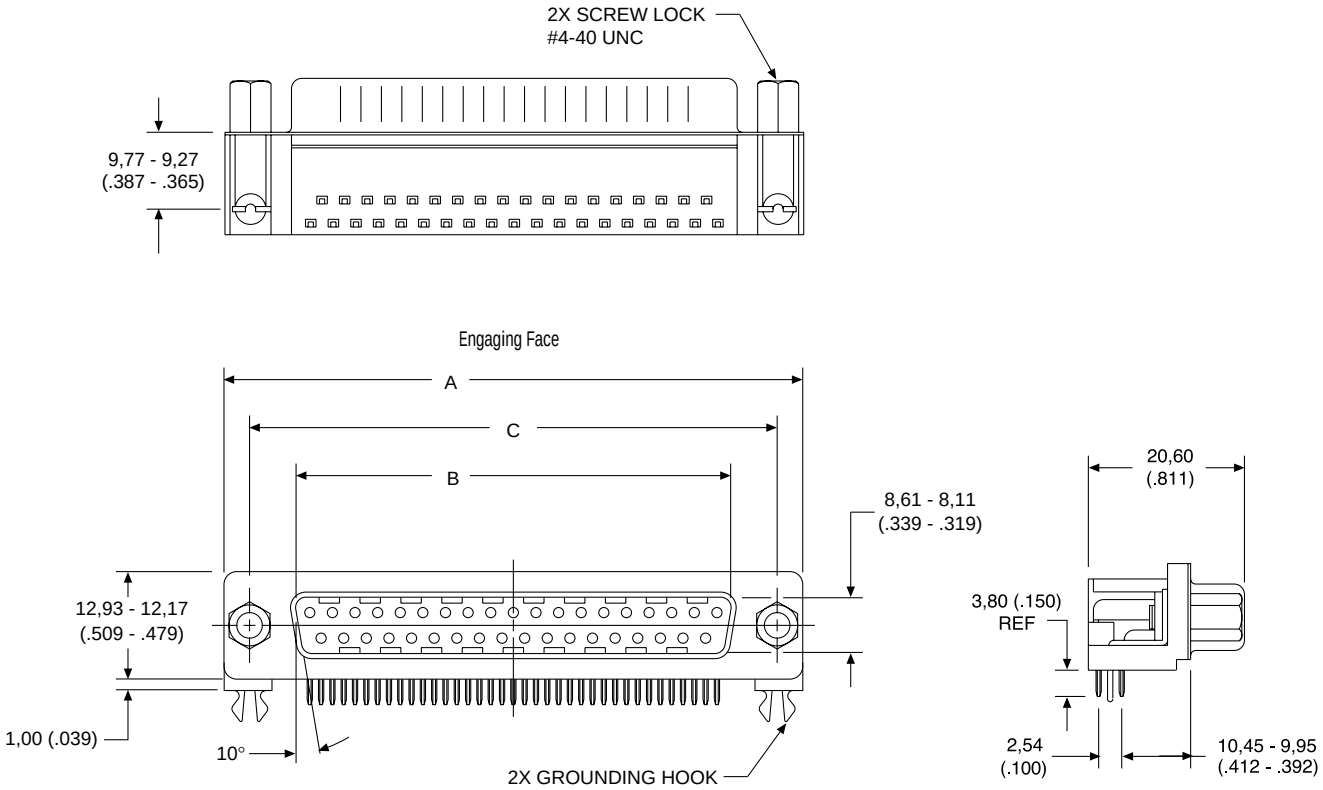

Dimensions

Shell Size	A ±0,38 (.015)	B ±0,25 (.010)	C ±0,13 (.005)
DE	30,89 (1.216)	16,92 (.666)	24,99 (.984)
DA	39,09 (1.539)	25,25 (.994)	33,32 (1.312)
DB	53,09 (2.090)	38,96 (1.534)	47,04 (1.852)
DC	69,40 (2.732)	55,42 (2.182)	63,50 (2.500)

Dimensions are shown in mm (inch)
Dimensions subject to change

90° Solder Termination (Stamped) — European Footprint 10,2 mm

Receptacle

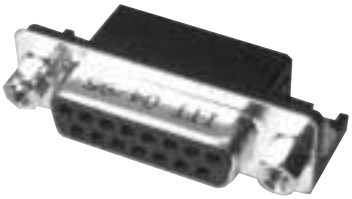

Selection Guide
For Product Features, Specifications, Materials and Finishes, see pages 14-15.

Reader's Resource
For contact cavity arrangements, see page 224.
For P.C. hole patterns, see page 273.
For panel cutouts, see page 221.
For hardware views (European), see page 227.

Part Numbers

Shell Size	Layout	Plastic Bracket, Integrated Grounding Strap, Boardlock, Threaded Insert #4-40 UNC	Plastic Bracket, Integrated Grounding Strap, Boardlock, Screw Lock #4-40 UNC
DE	9	ZDEL9S-1AKN-146	ZDE9S-1AKN-146
DA	15	ZDAL15S-1AKN-146	ZDA15S-1AKN-146
DB	25	ZDBL25S-1AKN-146	ZDB25S-1AKN-146
DC	37	ZDCL37S-1AKN-146	ZDC37S-1AKN-146

Note: For contacts with -A191 microinches gold add -A191. Example: ZDEL9S-1AKN-A191-146

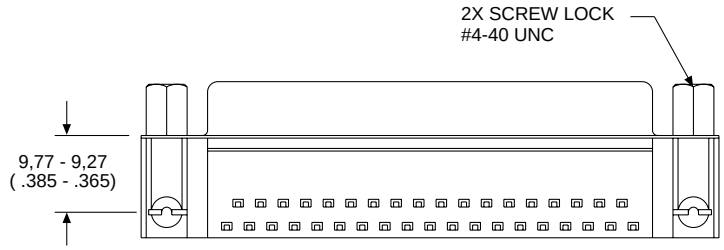

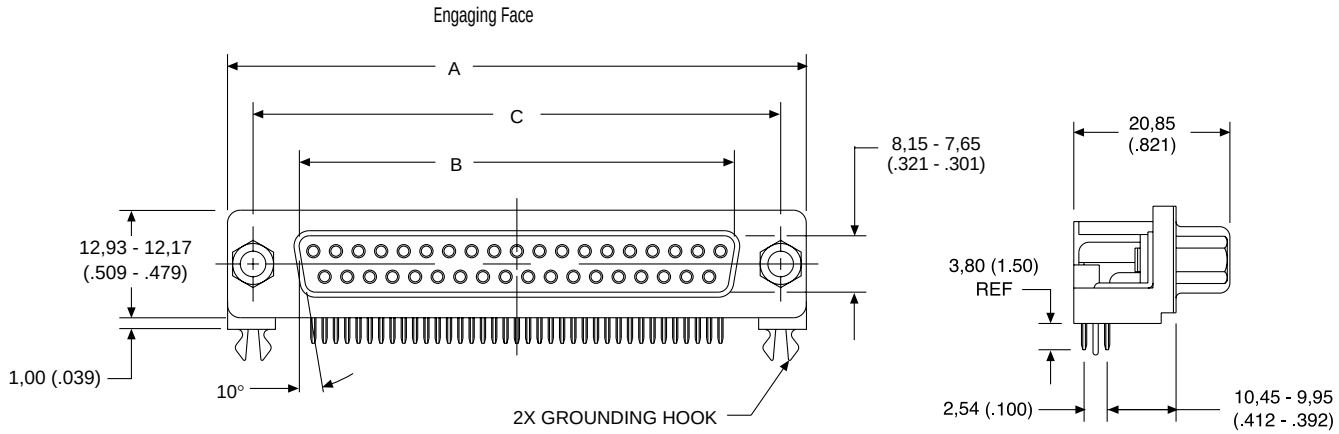

Dimensions

Shell Size	A ±0,38 (.015)	B ±0,25 (.010)	C ±0,13 (.005)
DE	30,89 (1.216)	16,33 (.643)	24,99 (.984)
DA	39,09 (1.539)	24,66 (.971)	33,32 (1.312)
DB	53,09 (2.090)	38,38 (1.511)	47,04 (1.852)
DC	69,40 (2.732)	54,84 (2.159)	63,50 (2.500)

D* — Solder Cup Termination (Machined) with Tin Shells

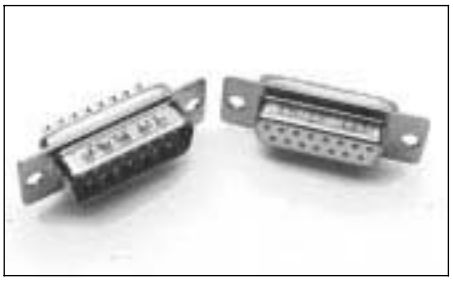

D* solder cup connectors are used for cable or panel mount wiring applications. Solder cup connectors provide maximum flexibility and performance for applications requiring discrete solder terminations and field repair without termination tooling.

Product Features

Machined solder cup termination, 5 A current capacity
High performance commercial class connectors
Two contact performance classes
Optional clinch nuts with #4-40 UNC or M3 threads

See pages 32-33.

ZD* — Solder Cup Termination (Stamped) with Tin Shells

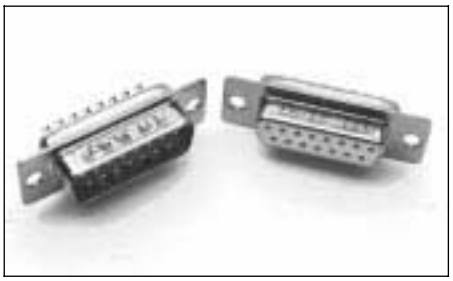

ZD* solder cup connectors are used for cable or panel mount wiring applications. Solder cup connectors provide maximum flexibility and performance for applications requiring discrete solder terminations.

Product Features

Stamped solder cup termination, 5 A current capacity
Economical

See pages 34-35.

D*A — Crimp Connectors without Contacts

D*A crimp contact connectors are designed for reliable, fast cabling. Available in the industry standard D*A housing, the connectors provide a low-cost, quick cabling alternative compared to soldering.

Product Features

Crimp contacts available in reels of 5,000
Application tooling:
– Hand or automatic
– Stripper crimper

See pages 36-37.

D*W — Discrete Wire IDC

The D*W connector provides insulation displacement connection technology for either solid or stranded wires. With D*W, speed of cabling is increased significantly over solder cup or crimp solutions. Contacts are easily removable and replaceable. Several specialized accessories (including shield cans, ferrules, and plastic boots) are available to provide a complete product solution.

Product Features

Quick harnessing capability with simple hand or semi-automatic tooling
Accepts 30 AWG to 20 AWG wire; sizes can be mixed
Shield cans insure reliable shielding continuity

See pages 38-41.

Dimensions are shown in mm (inch)
Dimensions subject to change

Specifications

Temperature Rating	−55°C to 125°C
Current Rating	5 A
Contact Resistance	10 mΩ
Dielectric Withstanding Voltage	1250 VAC

Materials and Finishes

Description	Material	Finish
Shell/Hardware	Steel	Tin
Insulator	Thermoplastic, UL 94V-0	None
Contacts	Copper Alloy	Gold over Nickel

Specifications

Temperature Rating	−55°C to 105°C
Current Rating	5 A
Contact Resistance	15 mΩ
Dielectric Withstanding Voltage	1000 VAC at Sea Level

Materials and Finishes

Description	Material	Finish
Shell	Steel	Tin
Insulator	Thermoplastic, UL 94V-0	None
Contacts	Copper Alloy	Gold over Nickel

Specifications

Temperature Rating	−55°C to 105°C
Current Rating	5 A (20 AWG)
Contact Resistance	15 mΩ
Dielectric Withstanding Voltage	500 VAC at Sea Level

Materials and Finishes

Description	Material	Finish
Shell/Hardware	Steel	Tin
Insulator	Thermoplastic, UL 94V-0	None
Contacts	Copper Alloy	Gold over Nickel

Specifications

Temperature Rating	−55°C to 125°C
Current Rating	3 A (20 AWG) 2 A (22 AWG) 1,4 A (24 AWG) 1,2 A (26 AWG) 1 A (28 AWG) 0,8 A (30 AWG)
Contact Resistance	15 mΩ
Dielectric Withstanding Voltage	1000 VAC at Sea Level

Materials and Finishes

Description	Material	Finish
Shell/Hardware	Steel	Tin
Insulator	Thermoplastic, UL 94V-0	None
Contacts	Copper Alloy	Gold over Nickel in mating area, Tin on balance

Solder Cup Termination (Machined) with Tin Shells

Plug

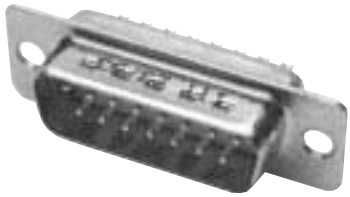

Selection Guide
For Product Features, Specifications, Materials and Finishes, see pages 30-31.

Reader's Resource
For contact cavity arrangements, see page 224.
For panel cutouts, see page 221.
For hardware views (European), see page 227.

Part Numbers

Shell Size	Layout	Through Hole	Clinch Nut #4-40 UNC	Clinch Nut M3
DE	9	DE9PK87	DEE9PK87	DEX9PK87
DA	15	DA15PK87	DAE15PK87	DAX15PK87
DB	25	DB25PK87	DBE25PK87	DBX25PK87
DC	37	DC37PK87	DCE37PK87	DCX37PK87
DD	50	DD50PK87	DDE50PK87	DDX50PK87

Note: For performance class 2, add A191. Example: DA15PA191K87.

Engaging Face

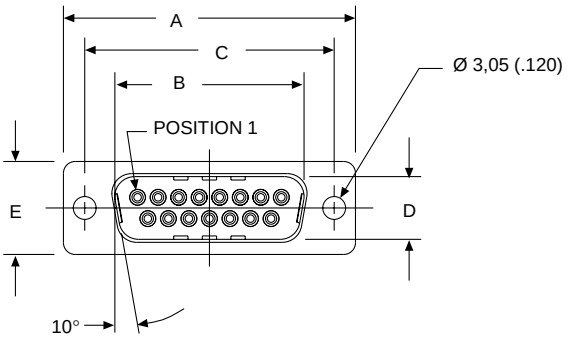

DD Configuration

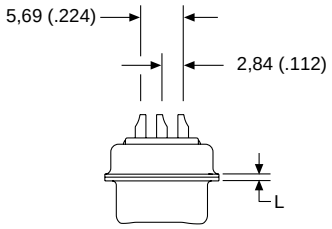

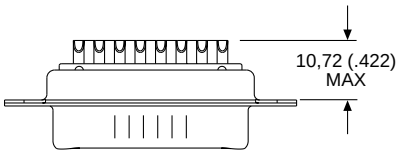

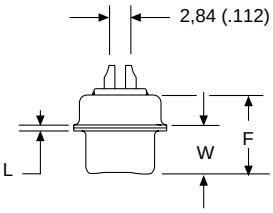

Dimensions

Shell Size	A ±0,38 (.015)	B ±0,13 (.005)	C ±0,13 (.005)	D ±0,13 (.005)	E ±0,38 (.015)	F ±0,25 (.010)	W ±0,368 (.0145)	W ±0,41 (.016)	L ±0,25 (.010)
DE	30,81 (1.213)	16,92 (.666)	24,99 (.984)	8,36 (.329)	12,55 (.494)	10,72 (.422)	6,693 (.2635)	—	0,76 (.030)
DA	39,14 (1.541)	25,25 (.994)	33,32 (1.312)	8,36 (.329)	12,55 (.494)	10,72 (.422)	6,693 (.2635)	—	0,76 (.030)
DB	53,04 (2.088)	38,96 (1.534)	47,04 (1.852)	8,36 (.329)	12,55 (.494)	10,82 (.426)	—	6,84 (.269)	0,99 (.039)
DC	69,32 (2.729)	55,42 (2.182)	63,50 (2.500)	8,36 (.329)	12,55 (.494)	10,82 (.426)	—	6,84 (.269)	0,99 (.039)
DD	66,93 (2.635)	52,81 (2.079)	61,11 (2.406)	11,07 (.436)	15,37 (.605)	10,82 (.426)	—	6,84 (.269)	0,99 (.039)

Dimensions are shown in mm (inch)
Dimensions subject to change

Solder Cup Termination (Machined) with Tin Shells

Receptacle

Selection Guide
For Product Features, Specifications, Materials and Finishes, see pages 30-31.

Reader's Resource
For contact cavity arrangements, see page 224.
For panel cutouts, see page 221.
For hardware views (European), see page 227.

Part Numbers

Shell Size	Layout	Through Hole	Clinch Nut #4-40 UNC	Clinch Nut M3
DE	9	DE9SA197	DEE9SA197	DEX9SA197
DA	15	DA15SA197	DAE15SA197	DAX15SA197
DB	25	DB25SA197	DBE25SA197	DBX25SA197
DC	37	DC37SA197	DCE37SA197	DCX37SA197
DD	50	DD50SA197	DDE50SA197	DDX50SA197

Note: For performance class 2, add A191. Example: DA15SA191A197.

Engaging Face

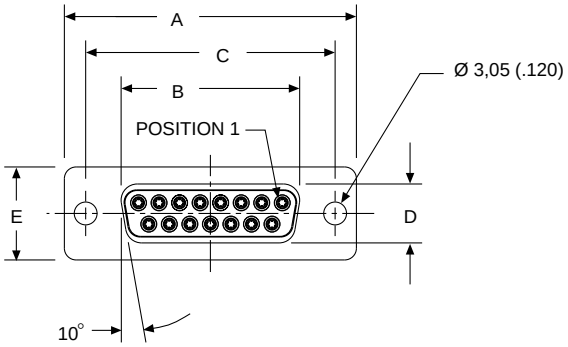

DD Configuration

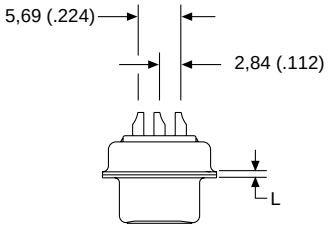

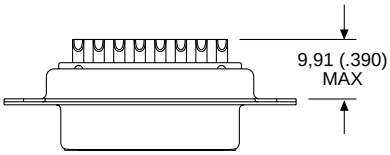

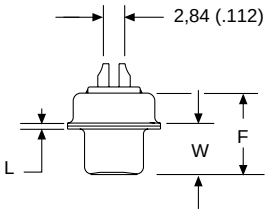

Dimensions

Shell Size	A ±0,38 (.015)	B ±0,13 (.005)	C ±0,13 (.005)	D ±0,13 (.005)	E ±0,38 (.015)	F ±0,25 (.010)	W ±0,38 (.015)	L ±0,25 (.010)
DE	30,81 (1.213)	16,33 (.643)	24,99 (.984)	7,90 (.311)	12,55 (.494)	10,90 (.429)	6,94 (.273)	0,76 (.030)
DA	39,14 (1.541)	24,66 (.971)	33,32 (1.312)	7,90 (.311)	12,55 (.494)	10,90 (.429)	6,94 (.273)	0,76 (.030)
DB	53,04 (2.088)	38,38 (1.511)	47,04 (1.852)	7,90 (.311)	12,55 (.494)	10,90 (.429)	6,94 (.273)	0,76 (.030)
DC	69,32 (2.729)	54,84 (2.159)	63,50 (2.500)	7,90 (.311)	12,55 (.494)	10,90 (.429)	6,94 (.273)	0,76 (.030)
DD	66,93 (2.635)	52,42 (2.064)	61,11 (2.406)	10,74 (.423)	15,37 (.605)	10,90 (.429)	6,94 (.273)	0,76 (.030)

Solder Cup Termination (Stamped) with Tin Shells

Plug

Selection Guide
For Product Features, Specifications, Materials and Finishes, see pages 30-31.

Reader's Resource
For contact cavity arrangements, see page 224.
For panel cutouts, see page 221.
For hardware views (Standard), see page 226.

Part Numbers

Shell Size	Layout	Through Hole
DE	9	ZDE9P
DA	15	ZDA15P
DB	25	ZDB25P
DC	37	ZDC37P
DD	50	ZDD50P

Engaging Face

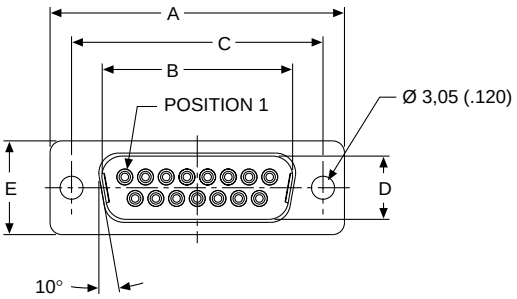

DD Configuration

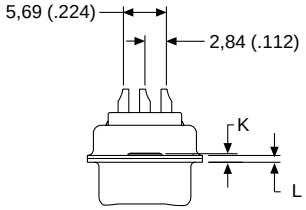

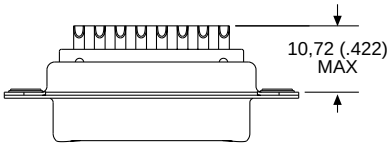

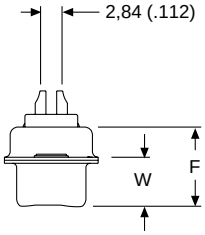

Dimensions

Shell Size	A ±0,38 (.015)	B ±0,13 (.005)	C ±0,13 (.005)	D ±0,13 (.005)	E ±0,38 (.015)	F ±0,25 (.010)	W ±0,368 (.0145)	W ±0,41 (.016)	K ±0,317 (.0125)	K ±0,25 (.010)	L ±0,25 (.010)
DE	30,81 (1.213)	16,92 (.666)	24,99 (.984)	8,36 (.329)	12,55 (.494)	10,72 (.422)	6,693 (.2635)	—	1,206 (.0475)	—	0,76 (.030)
DA	39,14 (1.541)	25,25 (.994)	33,32 (1.312)	8,36 (.329)	12,55 (.494)	10,72 (.422)	6,693 (.2635)	—	1,206 (.0475)	—	0,76 (.030)
DB	53,04 (2.088)	38,96 (1.534)	47,04 (1.852)	8,36 (.329)	12,55 (.494)	10,82 (.426)	—	6,84 (.269)	—	1,52 (.060)	0,99 (.039)
DC	69,32 (2.729)	55,42 (2.182)	63,50 (2.500)	8,36 (.329)	12,55 (.494)	10,82 (.426)	—	6,84 (.269)	—	1,52 (.060)	0,99 (.039)
DD	66,93 (2.635)	52,81 (2.079)	61,11 (2.406)	11,07 (.436)	15,37 (.605)	10,82 (.426)	—	6,84 (.269)	—	1,52 (.060)	0,99 (.039)

Dimensions are shown in mm (inch)
Dimensions subject to change

Solder Cup Termination (Stamped) with Tin Shells

Receptacle

Part Numbers

Shell Size	Layout	Through Hole
DE	9	ZDE9S
DA	15	ZDA15S
DB	25	ZDB25S
DC	37	ZDC37S
DD	50	ZDD50S

Selection Guide
For Product Features, Specifications, Materials and Finishes, see pages 30-31.

Reader's Resource
For contact cavity arrangements, see page 224.
For panel cutouts, see page 221.
For hardware views (Standard), see page 226.

Engaging Face

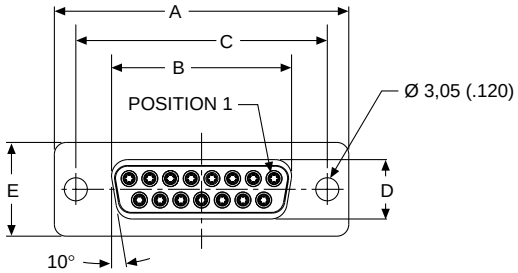

DD Configuration

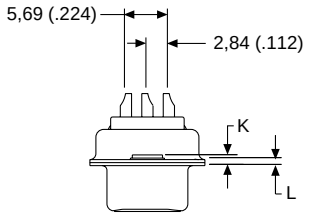

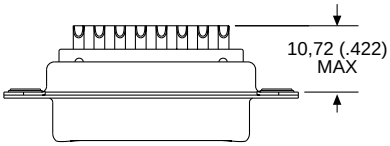

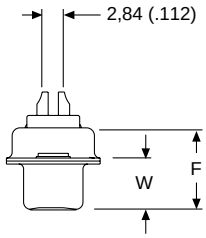

Dimensions

Shell Size	A ±0,38 (.015)	B ±0,13 (.005)	C ±0,13 (.005)	D ±0,13 (.005)	E ±0,38 (.015)	F ±0,25 (.010)	W ±0,38 (.015)	K ±0,318 (.0125)	L ±0,25 (.010)
DE	30,81 (1.213)	16,33 (.643)	24,99 (.984)	7,90 (.311)	12,55 (.494)	10,90 (.429)	6,94 (.273)	1,206 (.0475)	0,76 (.030)
DA	39,14 (1.541)	24,66 (.971)	33,32 (1.312)	7,90 (.311)	12,55 (.494)	10,90 (.429)	6,94 (.273)	1,206 (.0475)	0,76 (.030)
DB	53,04 (2.088)	38,38 (1.511)	47,04 (1.852)	7,90 (.311)	12,55 (.494)	10,90 (.429)	6,94 (.273)	1,206 (.0475)	0,76 (.030)
DC	69,32 (2.729)	54,84 (2.159)	63,50 (2.500)	7,90 (.311)	12,55 (.494)	10,90 (.429)	6,94 (.273)	1,206 (.0475)	0,76 (.030)
DD	66,93 (2.635)	52,42 (2.064)	61,11 (2.406)	10,74 (.423)	15,37 (.605)	10,90 (.429)	6,94 (.273)	1,206 (.0475)	0,76 (.030)

Crimp Connectors without Contacts

Plug

Part Numbers

Shell Size	Layout	Through Hole
DE	9	DEA9PK87FO
DA	15	DAA15PK87FO
DB	25	DBA25PK87FO
DC	37	DCA37PK87FO

Note: For crimp (size 20) contacts and tooling, see pages 83 & 275.

Selection Guide
For Product Features, Specifications, Materials and Finishes, see pages 30-31.

Reader's Resource
For contact cavity arrangements, see page 224.
For panel cutouts, see page 221.
For hardware views (Standard), see page 226.

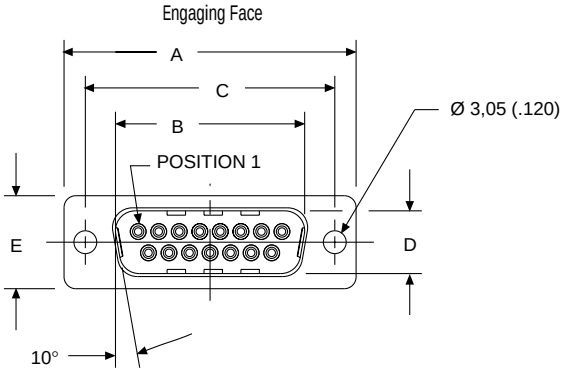

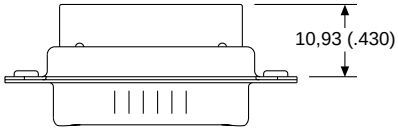

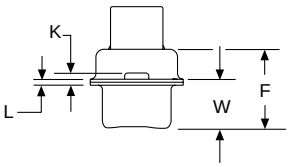

Dimensions

Shell Size	A ±0,38 (.015)	B ±0,13 (.005)	C ±0,13 (.005)	D ±0,13 (.005)	E ±0,38 (.015)	F ±0,25 (.010)	W ±0,368 (.0145)	W ±0,41 (.016)	K ±0,317 (.0125)	K ±0,25 (.010)	L ±0,25 (.010)
DE	30,81 (1.213)	16,92 (.666)	24,99 (.984)	8,36 (.329)	12,55 (.494)	10,72 (.422)	6,693 (.2635)	—	1,206 (.0475)	—	0,76 (.030)
DA	39,14 (1.541)	25,25 (.994)	33,32 (1.312)	8,36 (.329)	12,55 (.494)	10,72 (.422)	6,693 (.2635)	—	1,206 (.0475)	—	0,76 (.030)
DB	53,04 (2.088)	38,96 (1.534)	47,04 (1.852)	8,36 (.329)	12,55 (.494)	10,82 (.426)	—	6,84 (.269)	—	1,52 (.060)	0,99 (.039)
DC	69,32 (2.729)	55,42 (2.182)	63,50 (2.500)	8,36 (.329)	12,55 (.494)	10,82 (.426)	—	6,84 (.269)	—	1,52 (.060)	0,99 (.039)
DD	66,93 (2.635)	52,81 (2.079)	61,11 (2.406)	11,07 (.436)	15,37 (.605)	10,82 (.426)	—	6,84 (.269)	—	1,52 (.060)	0,99 (.039)

Dimensions are shown in mm (inch)
Dimensions subject to change

Crimp Connectors without Contacts

Receptacle

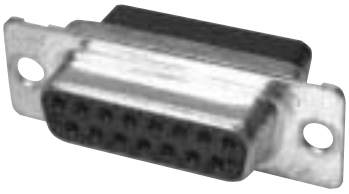

Part Numbers

Shell Size	Layout	Through Hole
DE	9	DEA9SA197FO
DA	15	DAA15SA197FO
DB	25	DBA25SA197FO
DC	37	DCA37SA197FO

Note: For crimp (size 20) contacts and tooling, see pages 83 & 275.

Selection Guide
For Product Features, Specifications, Materials and Finishes, see pages 30-31.

Reader's Resource
For contact cavity arrangements, see page 224.
For panel cutouts, see page 221.
For hardware views (Standard), see page 226.

Engaging Face

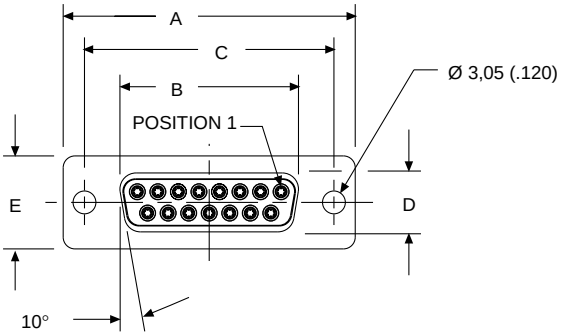

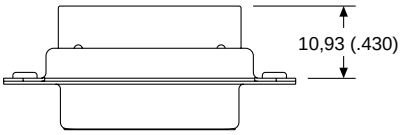

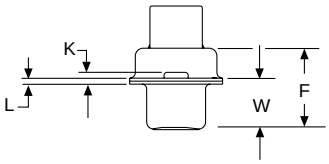

Dimensions

Shell Size	A ±0,38 (.015)	B ±0,13 (.005)	C ±0,13 (.005)	D ±0,13 (.005)	E ±0,38 (.015)	F ±0,25 (.010)	W ±0,38 (.015)	K ±0,318 (.0125)	L ±0,25 (.010)
DE	30,81 (1.213)	16,33 (.643)	24,99 (.984)	7,90 (.311)	12,55 (.494)	10,90 (.429)	6,94 (.273)	1,206 (.0475)	0,76 (.030)
DA	39,14 (1.541)	24,66 (.971)	33,32 (1.312)	7,90 (.311)	12,55 (.494)	10,90 (.429)	6,94 (.273)	1,206 (.0475)	0,76 (.030)
DB	53,04 (2.088)	38,38 (1.511)	47,04 (1.852)	7,90 (.311)	12,55 (.494)	10,90 (.429)	6,94 (.273)	1,206 (.0475)	0,76 (.030)
DC	69,32 (2.729)	54,84 (2.159)	63,50 (2.500)	7,90 (.311)	12,55 (.494)	10,90 (.429)	6,94 (.273)	1,206 (.0475)	0,76 (.030)
DD	66,93 (2.635)	52,42 (2.064)	61,11 (2.406)	10,74 (.423)	15,37 (.605)	10,90 (.429)	6,94 (.273)	1,206 (.0475)	0,76 (.030)

Discrete Wire IDC

Plug

Selection Guide
For Product Features, Specifications, Materials and Finishes, see pages 30-31.

Reader's Resource
For contact cavity arrangements, see page 224.
For panel cutouts, see page 221.
For hardware views (European), see page 227.

Part Numbers

Shell Size	Layout	Through Hole	Clinch Nut #4-40 UNC	Through Hole & Shield Can Kit	Clinch Nut #4-40 UNC & Shield Can Kit
DE	9	DEW9P*	DEWE9P*	DEW9P*G	DEWE9P*G
DA	15	DAW15P*	DAWE15P*	DAW15P*G	DAWE15P*G
DB	25	DBW25P*	DBWE25P*	DBW25P*G	DBWE25P*G
DC	37	DCW37P*	DCWE37P*	DCW37P*G	DCWE37P*G

Note: *Insert contact type. Example: DEW9P1.
For contacts with 0,76 μm gold add -A176. Example: DEW9P1-A176.
For shield can kit, see page 40.

Contact Types*	Wire Accommodation
1	28 AWG/30 AWG
2	22 AWG/26 AWG
3	20 AWG/22 AWG

For more information, see pages 40-41.

Engaging Face

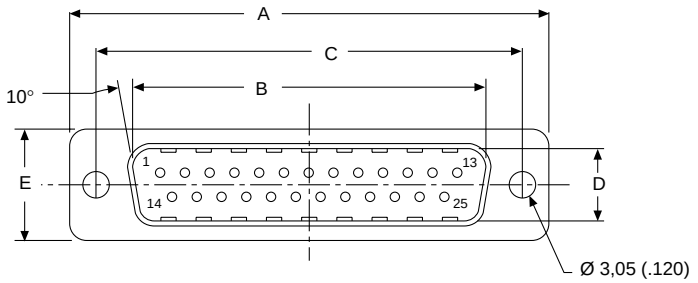

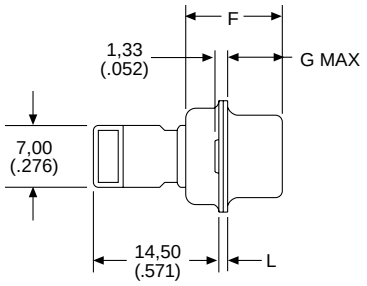

Rear Face

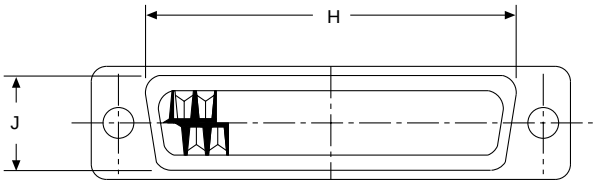

Dimensions

Shell Size	Layout	A ±0,38 (.015)	B ±0,12 (.005)	C ±0,12 (.005)	D ±0,13 (.005)	E ±0,38 (.015)	F ±0,25 (.010)	G max.	H ±0,25 (.010)	J ±0,25 (.010)	L ±0,25 (.010)
DEW	9	30,81 (1.213)	16,91 (.666)	24,99 (.984)	8,35 (.329)	12,55 (.494)	10,71 (.422)	6,05 (.238)	19,27 (.759)	10,71 (.422)	0,76 (.030)
DAW	15	39,14 (1.541)	25,54 (.994)	33,32 (1.312)	8,35 (.329)	12,55 (.494)	10,71 (.422)	6,05 (.238)	27,50 (1.083)	10,71 (.422)	0,76 (.030)
DBW	25	53,03 (2.048)	38,96 (1.534)	47,04 (1.852)	8,35 (.329)	12,55 (.494)	10,82 (.426)	5,99 (.236)	41,27 (1.625)	10,71 (.422)	0,99 (.039)
DCW	37	69,32 (2.729)	55,42 (2.182)	63,50 (2.500)	8,35 (.329)	12,55 (.494)	10,82 (.426)	5,99 (.236)	57,70 (2.272)	10,71 (.422)	0,99 (.039)

Dimensions are shown in mm (inch)
Dimensions subject to change

Discrete Wire IDC

Receptacle

Selection Guide

For Product Features, Specifications, Materials and Finishes, see pages 30-31.

Reader's Resource

For contact cavity arrangements, see page 224.
For panel cutouts, see page 221.
For hardware views (European), see page 227.

Part Numbers

Shell Size	Layout	Through Hole	Clinch Nut #4-40 UNC	Through Hole & Shield Can Kit	Clinch Nut #4-40 UNC & Shield Can Kit
DE	9	DEW9S*	DEWE9S*	DEW9S*G	DEWE9S*G
DA	15	DAW15S*	DAWE15S*	DAW15S*G	DAWE15S*G
DB	25	DBW25S*	DBWE25S*	DBW25S*G	DBWE25S*G
DC	37	DCW37S*	DCWE37S*	DCW37S*G	DCWE37S*G

Note: *Insert contact type. Example: DEW9S1.
For contacts with 0,76 µm gold add -A176. Example: DEW9S1-A176.
For shield can kit, see page 40.

Contact Types*	Wire Accommodation
1	28 AWG/30 AWG
2	22 AWG/26 AWG
3	20 AWG/22 AWG

For more information, see pages 40-41.

Engaging Face

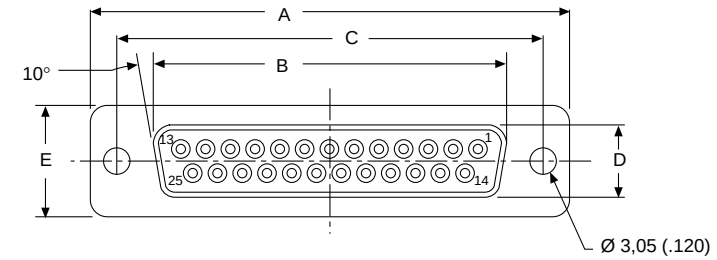

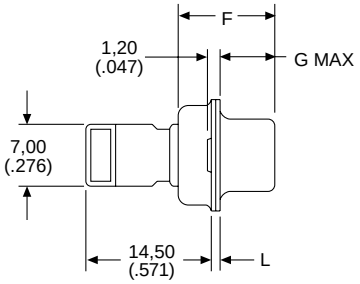

Rear Face

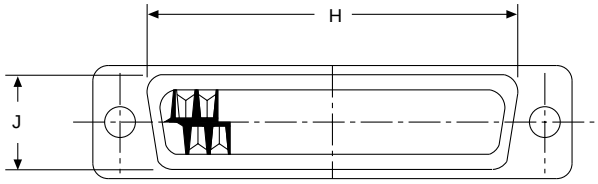

Dimensions

Shell Size	Layout	A ±0,38 (.015)	B ±0,12 (.005)	C ±0,12 (.005)	D ±0,13 (.005)	E ±0,38 (.015)	F ±0,25 (.010)	G max.	H ±0,25 (.010)	J ±0,25 (.010)	L ±0,25 (.010)
DEW	9	30,81 (1.213)	16,33 (.643)	24,99 (.984)	7,90 (.311)	12,55 (.494)	10,89 (.429)	6,30 (.248)	19,27 (.759)	10,71 (.422)	0,76 (.030)
DAW	15	39,14 (1.541)	24,66 (.971)	33,32 (1.312)	7,90 (.311)	12,55 (.494)	10,89 (.429)	6,30 (.248)	27,50 (1.083)	10,71 (.422)	0,76 (.030)
DBW	25	53,03 (2.048)	38,38 (1.511)	47,04 (1.852)	7,90 (.311)	12,55 (.494)	10,89 (.429)	6,30 (.248)	41,27 (1.625)	10,71 (.422)	0,76 (.030)
DCW	37	69,32 (2.729)	55,84 (2.159)	63,50 (2.500)	7,90 (.311)	12,55 (.494)	10,89 (.429)	6,30 (.248)	57,70 (2.272)	10,71 (.422)	0,76 (.030)

Shield Can Kit

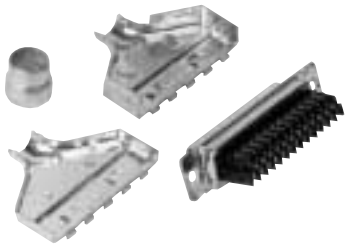

Materials and Finishes

Shield Can and Ferrule	
Material:	Steel
Finish:	Tin

Ferrule

D*W	Ø Cable	Ferrule Ø A	Ferrule Part Number	Crimp Tool Part Number	Crimp Tool Position
DEW9G	4,8-5,5	6,25 (.246)	304-8810-000	D115433-1	B
	5,5-6,2	6,25 (.246)	304-8810-000	D115433-1	A
	6,2-7,2	8,20 (.323)	304-8811-000	D115433-2	B
	7,2-8,2	8,20 (.323)	304-8811-000	D115433-2	A
	8,2-9,5	11,50 (.452)	304-8812-000	D115433-3	B
	9,5-11,1	11,50 (.452)	304-8813-000	D115433-3	A
DBW25G	4,8-5,5	6,25 (.246)	304-8810-000	D115433-1	B
	5,5-6,2	6,25 (.246)	304-8810-000	D115433-1	A
	6,2-7,2	8,20 (.323)	304-8811-000	D115433-2	B
	7,2-8,2	8,20 (.323)	304-8811-000	D115433-2	A
	8,2-9,5	11,50 (.452)	304-8812-000	D115433-3	B
	9,5-11,1	11,50 (.452)	304-8813-000	D115433-3	A

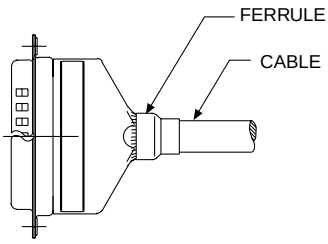

Ferrule

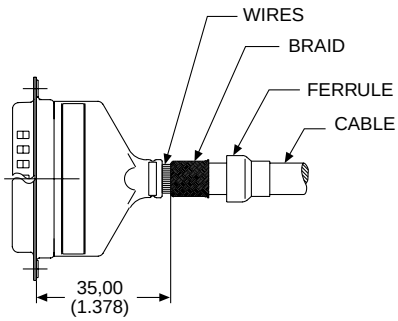

Wire Trim Dimensions

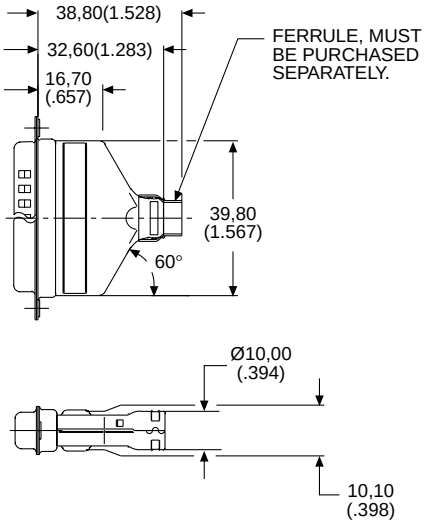

Crimp Tool Positions

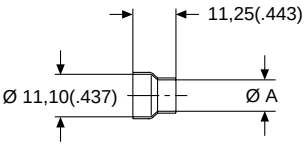

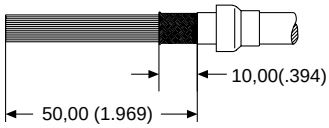

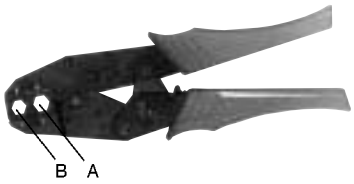

ITT Cannon

Dimensions are shown in mm (inch)
Dimensions subject to change

Discrete Wire IDC Contacts

Contacts

Contact Types	1	2	3
Pin	330-8753-101	330-8753-102	330-8753-103
Socket	330-8754-101	330-8754-102	330-8754-103

Solid Cable

Wire Size	28 AWG	30 AWG	22 AWG	24 AWG	26 AWG	20 AWG	22 AWG
Section mm^2	0.08	0.05	0.34	0.22	0.12	0.60	0.34
Internal dia. mm max	0.32	0.26	0.62	0.51	0.40	0.88	0.62
External dia. mm max	1.30	1.20	1.45	1.45	1.40	1.45	1.45

Stranded Cable

Wire Size	28 AWG	30 AWG	22 AWG	24 AWG	26 AWG	20 AWG	22 AWG
Section mm^2	0.09	0.05	0.34	0.22	0.12	0.60	0.34
Composition	7 x 0.13	7 x 0.10	7 x 0.25	7 x 0.20	7 x 0.15	19 x 0.20	7 x 0.25
Internal cable dia. mm max	0.40	0.30	0.75	0.60	0.45	0.97	0.75
External wire dia. mm max	1.30	1.20	1.45	1.45	1.40	1.45	1.45

Insulation Displacement Connection Concept

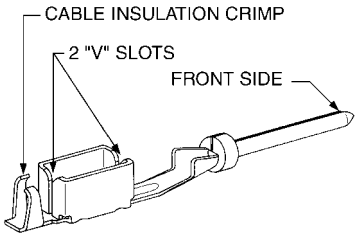

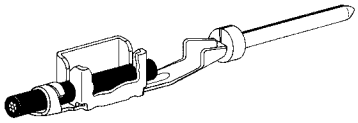

Tooling

Extraction Tool

Part Number
DW115394

Hand Crimp Tool

Part Number
Standard Tool: DW115394-1
Automatic Tool: DW115394-2
Tool Support: DW115394-20

Row by Row Pneumatic Press

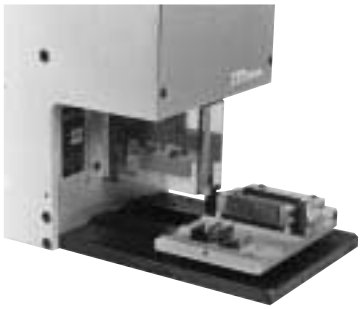

Part Number
DW115394-501

Selection Index Page

Combo D®
An Introduction . . . 43
Combo D® PCB Connectors with Coaxial 75 Ohm Contacts (50 Ohm Option)
Coaxial 90° — Standard Footprint .318♦ or .283♦♦ inch (Sizes DE-DC) . . . 44
Coaxial 90° — Standard Footprint .489♦ or .454♦♦ inch (Size DD) . . . 46
13C3 Special — Receptacle Only . . . 48
3C3 Shielded Special — Receptacle Only . . . 49
Coaxial 90° — European Footprint 10,2♦ or 9,4♦♦ mm (Sizes DE-DC) . . . 50
Coaxial Straight — Standard PC Tails (Sizes DE-DC) . . . 52
Coaxial Straight — Standard PC Tails (Size DD) . . . 54
Coaxial Straight — European PC Tails (Sizes DE-DC) . . . 56
Coaxial Straight — European PC Tails (Size DD) . . . 58
Combo D® PCB Connectors with High Power Contacts
40 A High Power 90° — Standard Footprint .489♦ or .454♦♦ inch (Sizes DE-DC) . . . 60
40 A High Power 90° — Standard Footprint .489♦ or .454♦♦ inch (Size DD) . . . 62
40 A High Power 90° — European Footprint 10,2♦ or 9,4♦♦ mm (Sizes DE-DC) . . . 64
40 A High Power Straight — Standard PC Tails (Sizes DE-DC) . . . 66
40 A High Power Straight — Standard PC Tails (Size DD) . . . 68
40 A High Power Straight — European PC Tails (Sizes DE-DC) . . . 70
40 A High Power Straight — European PC Tails (Size DD) . . . 72
Combo D® PCB Connectors with (Size 20) Signal Contacts Only
90° — European Footprint 10,2♦ or 9,4♦♦ mm (Sizes DE-DD) . . . 74
Straight PC Tails — European (Sizes DE-DD) . . . 76
Solder Cup (Sizes DE-DD) . . . 78
Combo D® PCB Crimp Connectors without Contacts (Sizes DA-DD) . . . 80
Loose Contacts and Tooling
Shield Cans and Crimp Tooling . . . 82
Crimp (Size 20) Contacts and Tooling . . . 83
Cable (Size 8) Loose Contacts
Coaxial 75 Ohm and Tooling — Straight Stamped Crimp/Crimp . . . 84
Coaxial 75 Ohm and Tooling — 90° Crimp Braid/Solder Center Contact . . . 85
Coaxial 50 Ohm — Straight Crimp or Solder Braid . . . 86
Coaxial 50 Ohm — 90° Crimp or Solder Braid . . . 87
Insertion/Extraction Instructions for Coaxial, High Power and High Voltage Contacts and Tooling . . . 88
Coaxial Assembly Instructions and Crimp Tooling . . . 89
High Power and Tooling — Straight Solder or Crimp . . . 90
High Voltage — Straight / 90° . . . 91
PCB (Size 8) Loose Contacts
Coaxial 75 Ohm — Straight / 90° . . . 92
High Power — Straight / 90° . . . 93
High Voltage — Straight . . . 94
PCB Guide Pin and Socket . . . 95

♦ Connector footprint measured from front shell.
♦♦ Connector footprint measured from rear shell.

Dimensions are shown in mm (inch)
Dimensions subject to change

Combination D Subminiature connectors offer the advantages of an industry standard shield I/O interconnect, with the flexibility of a customized special, designed for any application.

This connector system is ideal for applications that require optimization of space while improving overall shielding. Combo D® accomplishes this by combining multiple interconnect types into one fully shielded product, decreasing the number I/O interfaces and reducing the possibility of EMI/RFI leakage.

By continually investing in engineering and manufacturing technology, ITT Cannon has improved the performance and features of this popular product. This catalog contains our latest efforts to meet the global requirements of the commercial electronics industry with a flexible, reliable and cost effective connector solution.

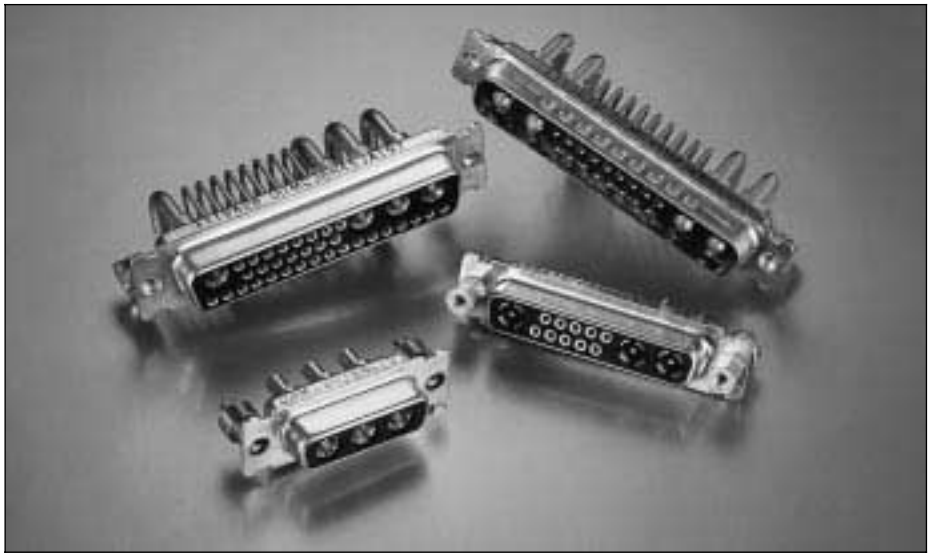

Applications

Video Coaxial Transmission (75 Ω)
RF and Telecom Transmission (50 Ω)
Power Interconnects (Up to 40 A)

Product Features

Standard and European Footprints
Pre-Installed 75 Ω/50 Ω Coaxial or High Power contacts (One Part Number)
Vertical Standoffs or 90° Brackets
90° or Straight PCB
PC Boards up to 3,2 (.125) Thick
PCB Variants Available with Boardlocks and/or Screw Locks (#4-40 or M3)

Specifications

Temperature Rating	−55°C to 125°C
Signal Contact Current Rating	7.5 A current capacity
Signal Contact Resistance	55 millivolt max. at 7.5 test current
Signal Contact Dielectric Withstanding Voltage	1250 VAC at Sea Level
Coaxial Current Rating	5 A
Coaxial Dielectric Withstanding Voltage	1000 VAC at Sea Level
Coaxial Impedance	75 Ω or 50 Ω
Coaxial VSWR	Less than 1.30 + .03F for F up to 500 MHz
Coaxial Insertion Loss	.3dB loss at 500 MHz
High Power Current Rating	Up to 40 A
High Power Dielectric Withstanding Voltage	1000 VAC at Sea Level
High Voltage Current Rating	5 A
High Voltage Contact Dielectric Withstanding Voltage	2800 V at Sea Level

Materials and Finishes

Connector Assembly

Description	Material	Finish/Treatment
Shell	Steel	Tin
Insulator	Black Polyester, UL 94V-0	None
Pin Contact	Copper Alloy	Gold over Nickel
Socket Contact	Copper Alloy	Gold over Nickel in mating area, Tin on balance
Standoff	Stainless Steel	Passivated
Bracket	Steel	Tin
Rivnut	Steel	Tin
Boardlock	Copper Alloy	Tin

Coaxial/High Power/High Voltage Contact Assemblies

Contacts and outer shells	Copper Alloy	Gold over Nickel (Tin on coax ground PC tails)
Ring, Retaining	Copper Alloy	Nickel
Insulator (Coaxial only)	Teflon	None
Insulator (High Voltage only)	Thermoplastic	None

U.L. File Number: E8572

Coaxial 90° — Standard Footprint .318♦ or .283 inch♦♦ (Sizes DE-DC)

Plug

Reader's Resource
For contact cavity arrangements, see page 222.
For P.C. hole patterns, see pages 228-229.
For panel cutouts, see page 221.
For hardware views (Standard), see page 226.
For alternate bracket configuration (when connectors are supplied without boardlocks), see page 226.
For alternate 50 Ohm coaxial configuration, see page 225.

75 Ohm Part Numbers* with Metal Bracket and Rivnut #4-40 UNC

Shell Size	Layout	Part Number Without Screw Locks Without Boardlocks	Part Number Without Screw Locks With Boardlocks	Part Number With Screw Locks Without Boardlocks	Part Number With Screw Locks With Boardlocks
DE	5W1	DEMP5C1PJK87	DEMC5C1PJK87	DEMD5C1PJK87	DEMG5C1PJK87
DA	7W2	DAMP7C2PJK87	DAMC7C2PJK87	DAMD7C2PJK87	DAMG7C2PJK87
DA	11W1	DAMP11C1PJK87	DAMC11C1PJK87	DAMD11C1PJK87	DAMG11C1PJK87
DA	3W3	DAMP3C3PJK87	DAMC3C3PJK87	DAMD3C3PJK87	DAMG3C3PJK87
DA	3WK3♣	DAMP3CK3PJK87TM	DAMC3CK3PJK87TM	DAMD3CK3PJK87TM	DAMG3CK3PJK87TM
DB	5W5	DBMP5C5PJK87	DBMC5C5PJK87	DBMD5C5PJK87	DBMG5C5PJK87
DB	9W4	DBMP9C4PJK87	DBMC9C4PJK87	DBMD9C4PJK87	DBMG9C4PJK87
DB	13W3	DBMP13C3PJK87	DBMC13C3PJK87	DBMD13C3PJK87	DBMG13C3PJK87
DB	17W2	DBMP17C2PJK87	DBMC17C2PJK87	DBMD17C2PJK87	DBMG17C2PJK87
DB	21W1	DBMP21C1PJK87	DBMC21C1PJK87	DBMD21C1PJK87	DBMG21C1PJK87
DC	8W8	DCMP8C8PJK87	DCMC8C8PJK87	DCMD8C8PJK87	DCMG8C8PJK87
DC	13W6	DCMP13C6PJK87	DCMC13C6PJK87	DCMD13C6PJK87	DCMG13C6PJK87
DC	17W5	DCMP17C5PJK87	DCMC17C5PJK87	DCMD17C5PJK87	DCMG17C5PJK87
DC	21WA4	DCMP21CA4PJK87	DCMC21CA4PJK87	DCMD21CA4PJK87	DCMG21CA4PJK87
DC	25W3	DCMP25C3PJK87	DCMC25C3PJK87	DCMD25C3PJK87	DCMG25C3PJK87
DC	27W2	DCMP27C2PJK87	DCMC27C2PJK87	DCMD27C2PJK87	DCMG27C2PJK87

Notes: * For 50 Ohm Coaxial substitute X for C. Example: DEMP5X1PJK87
For contacts with 30 microinches gold substitute K127 for K87. Example: DEMP5C1PJK127
For DD shell sizes, see page 46.
♣ Keyed.

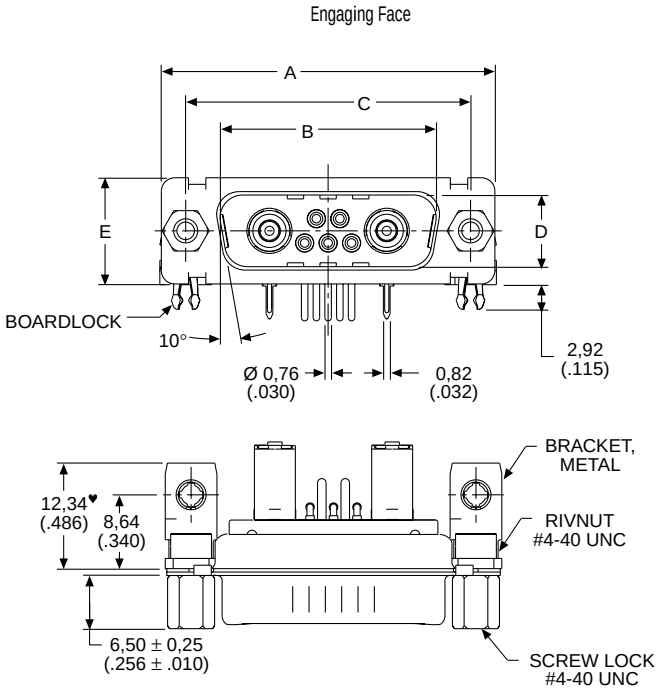

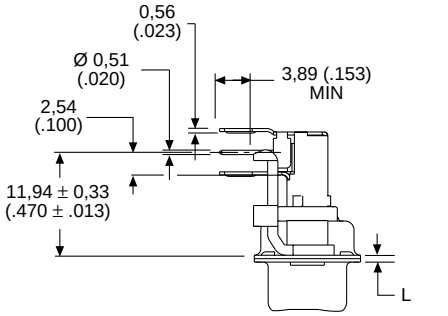

Screw lock, boardlock, and signal contacts removed for clarity

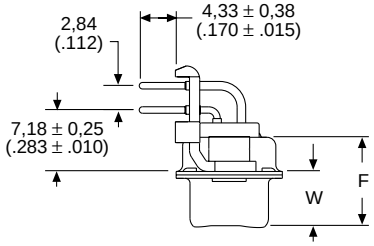

Screw lock, boardlock, and coaxial contact removed for clarity

Note: ♥ Dimension varies with alternate bracket configuration, see Reader's Resource page 226.

Dimensions

Shell Size	A ±0,38 (.015)	B ±0,13 (.005)	C ±0,13 (.005)	D ±0,13 (.005)	E ±0,38 (.015)	F ±0,25 (.010)	W ±0,368 (.0145)	W ±0,41 (.016)	L ±0,25 (.010)
DE	30,81 (1.213)	16,92 (.666)	24,99 (.984)	8,36 (.329)	12,55 (.494)	10,72 (.422)	6,693 (.2635)	—	0,76 (.030)
DA	39,14 (1.541)	25,25 (.994)	33,32 (1.312)	8,36 (.329)	12,55 (.494)	10,72 (.422)	6,693 (.2635)	—	0,76 (.030)
DB	53,04 (2.088)	38,96 (1.534)	47,04 (1.852)	8,36 (.329)	12,55 (.494)	10,82 (.426)	—	6,84 (.269)	0,99 (.039)
DC	69,32 (2.729)	55,42 (2.182)	63,50 (2.500)	8,36 (.329)	12,55 (.494)	10,82 (.426)	—	6,84 (.269)	0,99 (.039)

♦ Connector footprint measured from the front shell.
♦♦ Connector footprint measured from the rear shell.

Dimensions are shown in mm (inch)
Dimensions subject to change

Coaxial 90° — Standard Footprint .318♦ or .283 inch♦♦ (Sizes DE-DC)

Receptacle

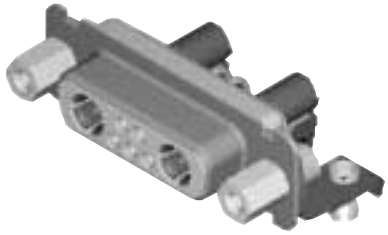

Reader's Resource
For contact cavity arrangements, see page 223.
For P.C. hole patterns, see pages 231-232.
For panel cutouts, see page 221.
For hardware views (Standard), see page 226.
For alternate bracket configuration (when connectors are supplied without boardlocks), see page 226.
For alternate 50 Ohm coaxial configuration, see page 225.

75 Ohm Part Numbers* with Metal Bracket and Rivnut #4-40 UNC

Shell Size	Layout	Part Number Without Screw Locks Without Boardlocks	Part Number Without Screw Locks With Boardlocks	Part Number With Screw Locks Without Boardlocks	Part Number With Screw Locks With Boardlocks
DE	5W1	DEMP5C1SJA197	DEMC5C1SJA197	DEMD5C1SJA197	DEMG5C1SJA197
DA	7W2	DAMP7C2SJA197	DAMC7C2SJA197	DAMD7C2SJA197	DAMG7C2SJA197
DA	11W1	DAMP11C1SJA197	DAMC11C1SJA197	DAMD11C1SJA197	DAMG11C1SJA197
DA	3W3	DAMP3C3SJA197	DAMC3C3SJA197	DAMD3C3SJA197	DAMG3C3SJA197
DA	3WK3♣	DAMP3CK3SJA197TM	DAMC3CK3SJA197TM	DAMD3CK3SJA197TM	DAMG3CK3SJA197TM
DB	5W5	DBMP5C5SJA197	DBMC5C5SJA197	DBMD5C5SJA197	DBMG5C5SJA197
DB	9W4	DBMP9C4SJA197	DBMC9C4SJA197	DBMD9C4SJA197	DBMG9C4SJA197
DB	13W3	DBMP13C3SJA197	DBMC13C3SJA197	DBMD13C3SJA197	DBMG13C3SJA197
DB	17W2	DBMP17C2SJA197	DBMC17C2SJA197	DBMD17C2SJA197	DBMG17C2SJA197
DB	21W1	DBMP21C1SJA197	DBMC21C1SJA197	DBMD21C1SJA197	DBMG21C1SJA197
DC	8W8	DCMP8C8SJA197	DCMC8C8SJA197	DCMD8C8SJA197	DCMG8C8SJA197
DC	13W6	DCMP13C6SJA197	DCMC13C6SJA197	DCMD13C6SJA197	DCMG13C6SJA197
DC	17W5	DCMP17C5SJA197	DCMC17C5SJA197	DCMD17C5SJA197	DCMG17C5SJA197
DC	21WA4	DCMP21CA4SJA197	DCMC21CA4SJA197	DCMD21CA4SJA197	DCMG21CA4SJA197
DC	25W3	DCMP25C3SJA197	DCMC25C3SJA197	DCMD25C3SJA197	DCMG25C3SJA197
DC	27W2	DCMP27C2SJA197	DCMC27C2SJA197	DCMD27C2SJA197	DCMG27C2SJA197

Notes: * For 50 Ohm Coaxial substitute X for C. Example: DEMP5X1SJA197
For contacts with 30 microinches gold substitute K126 for A197. Example: DEMP5C1SJK126
For DD Shell Sizes, see page 47.
♣ Keyed.

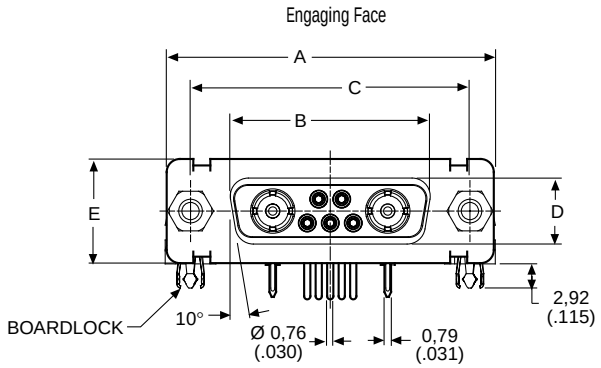

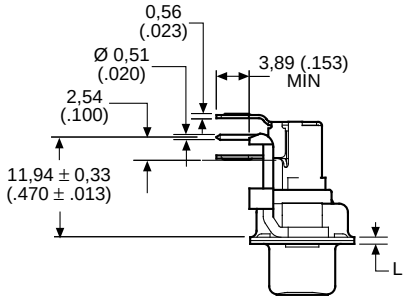

Screw lock, boardlock and signal contacts removed for clarity

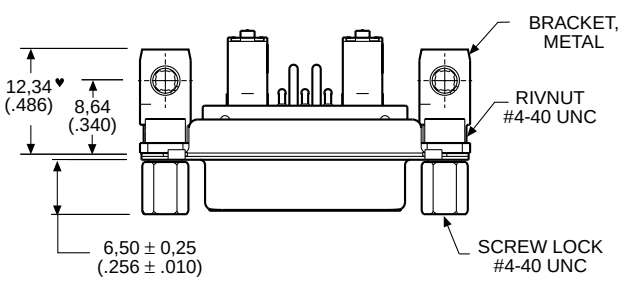

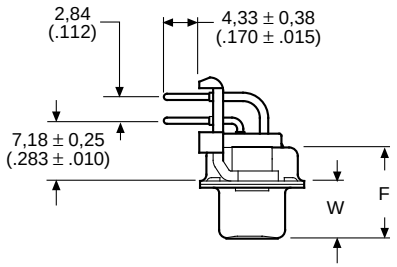

Screw lock, boardlock and coaxial contact removed for clarity

Note: ♥ Dimension varies with alternate bracket configuration, See Reader's Resource page 226.

Dimensions

Shell Size	A ±0,38 (.015)	B ±0,13 (.005)	C ±0,13 (.005)	D ±0,13 (.005)	E ±0,38 (.015)	F ±0,25 (.010)	W ±0,38 (.015)	L ±0,25 (.010)
DE	30,81 (1.213)	16,33 (.643)	24,99 (.984)	7,90 (.311)	12,55 (.494)	10,90 (.429)	6,94 (.273)	0,76 (.030)
DA	39,14 (1.541)	24,66 (.971)	33,32 (1.312)	7,90 (.311)	12,55 (.494)	10,90 (.429)	6,94 (.273)	0,76 (.030)
DB	53,04 (2.088)	38,38 (1.511)	47.04 (1.852)	7,90 (.311)	12,55 (.494)	10,90 (.429)	6,94 (.273)	0,76 (.030)
DC	69,32 (2.729)	54,84 (2.159)	63,50 (2.500)	7,90 (.311)	12,55 (.494)	10,90 (.429)	6,94 (.273)	0,76 (.030)

♦ Connector footprint measured from the front shell.
♦♦ Connector footprint measured from the rear shell.

Coaxial 90° — Standard Footprint .489♦ or .454 inch♦♦ (Size DD)

Plug

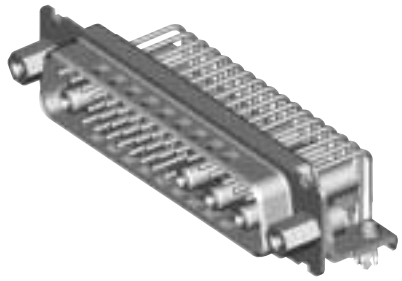

75 Ohm Part Numbers* with Metal Bracket and Rivnut #4-40 UNC

Shell Size	Layout	Part Number Without Screw Locks Without Boardlocks	Part Number Without Screw Locks With Boardlocks	Part Number With Screw Locks Without Boardlocks	Part Number With Screw Locks With Boardlocks
DD	24W7	DDMP24C7PJK87	DDMC24C7PJK87	DDMD24C7PJK87	DDMG24C7PJK87
DD	36W4	DDMP36C4PJK87	DDMC36C4PJK87	DDMD36C4PJK87	DDMG36C4PJK87
DD	43W2	DDMP43C2PJK87	DDMC43C2PJK87	DDMD43C2PJK87	DDMG43C2PJK87
DD	47W1	DDMP47C1PJK87	DDMC47C1PJK87	DDMD47C1PJK87	DDMG47C1PJK87

Notes: * For 50 Ohm Coaxial substitute X for C. Example: DDMG36X4PJK87
For contacts with 30 microinches gold substitute K127 for K87. Example: DDMP24C7PJK127

Reader's Resource

For contact cavity arrangements, see page 222.
For P.C. hole patterns, see page 230.
For panel cutouts, see page 221.
For hardware views (Standard), see page 226.
For alternate bracket configuration (when connectors are supplied without boardlocks), see page 226.
For alternate 50 Ohm coaxial configuration, see page 225.

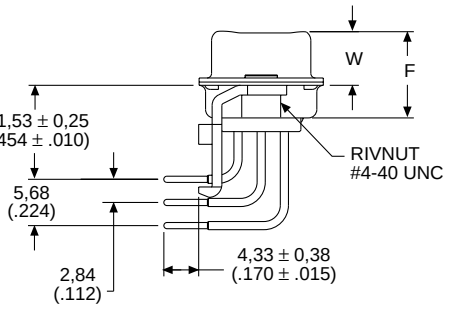

Screw lock, boardlock, and coaxial contacts removed for clarity

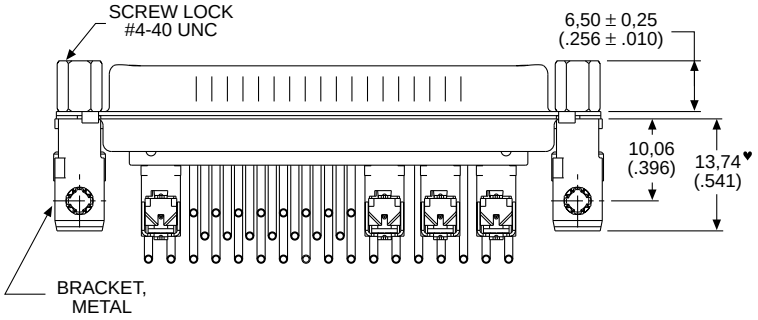

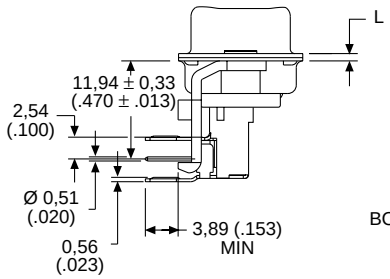

Screw lock, boardlock, and signal contacts removed for clarity

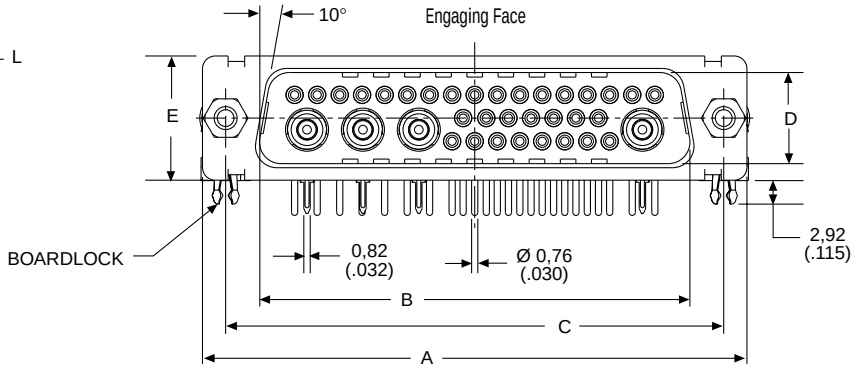

Note: ♥ Dimension varies with alternate bracket configuration, See Reader's Resource page 226.

Dimensions

Shell Size	A ±0,38 (.015)	B ±0,13 (.005)	C ±0,13 (.005)	D ±0,13 (.005)	E ±0,38 (.015)	F ±0,25 (.010)	W ±0,41 (.016)	L ±0,25 (.010)
DD	66,93 (2.635)	52,81 (2.079)	61,11 (2.406)	11,07 (.436)	15,37 (.605)	10,82 (.426)	6,84 (.269)	0,99 (.039)

♦ Connector footprint measured from the front shell.
♦♦ Connector footprint measured from the rear shell.

Dimensions are shown in mm (inch)
Dimensions subject to change

Coaxial 90° — Standard Footprint .489♦ or .454 inch♦♦ (Size DD)

Receptacle

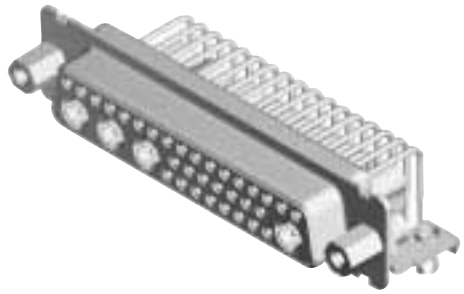

75 Ohm Part Numbers* with Metal Bracket and Rivnut #4-40 UNC

Shell Size	Layout	Part Number Without Screw Locks Without Boardlocks	Part Number Without Screw Locks With Boardlocks	Part Number With Screw Locks Without Boardlocks	Part Number With Screw Locks With Boardlocks
DD	24W7	DDMP24C7SJA197	DDMC24C7SJA197	DDMD24C7SJA197	DDMG24C7SJA197
DD	36W4	DDMP36C4SJA197	DDMC36C4SJA197	DDMD36C4SJA197	DDMG36C4SJA197
DD	43W2	DDMP43C2SJA197	DDMC43C2SJA197	DDMD43C2SJA197	DDMG43C2SJA197
DD	47W1	DDMP47C1SJA197	DDMC47C1SJA197	DDMD47C1SJA197	DDMG47C1SJA197

Notes: * For 50 Ohm Coaxial substitute X for C. Example: DDMG36X4SJA197
For contacts with 30 microinches gold substitute K126 for A197. Example: DDMP24C7SJK126

Reader's Resource

For contact cavity arrangements, see page 223.
For P.C. hole patterns, see page 233.
For panel cutouts, see page 221.
For hardware views (Standard), see page 226.
For alternate bracket configuration (when connectors are supplied without boardlocks), see page 226.
For alternate 50 Ohm coaxial configuration, see page 225.

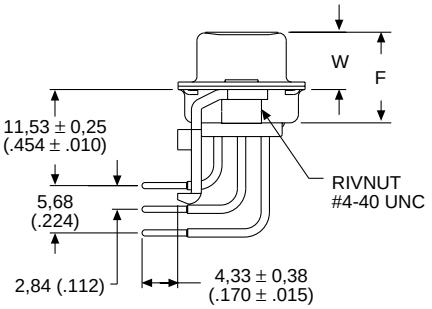

Screw lock, boardlock, and coaxial contact removed for clarity

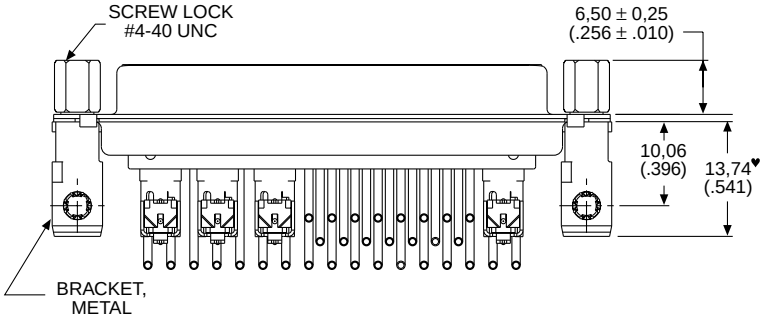

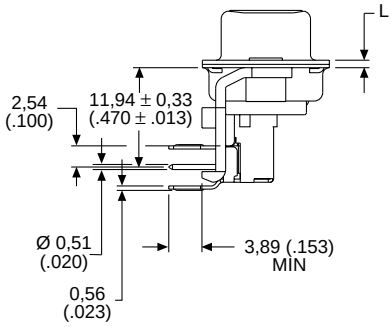

Screw lock, boardlock, and signal contacts removed for clarity

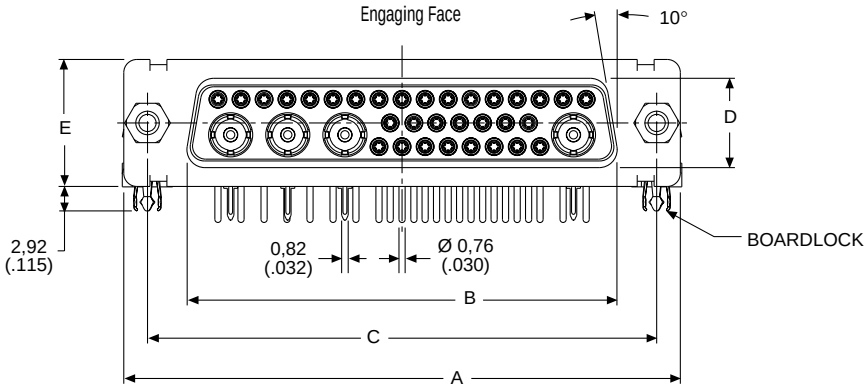

Note: ♥ Dimension varies with alternate bracket configuration, See Reader's Resource page 226.

Dimensions

Shell Size	A ±0,38 (.015)	B ±0,13 (.005)	C ±0,13 (.005)	D ±0,13 (.005)	E ±0,38 (.015)	F ±0,25 (.010)	W ±0,38 (.015)	L ±0,25 (.010)
DD	66,93 (2.635)	52,42 (2.064)	61,11 (2.406)	10,74 (.423)	15,37 (.605)	10,90 (.429)	6,94 (.273)	0,76 (.030)

♦ Connector footprint measured from the front shell.
♦♦ Connector footprint measured from the rear shell.

13C3 Special — Receptacle only

Receptacle

Reader's Resource
For contact cavity arrangements, see page 223.
For P.C. hole patterns, see page 236 (Rear shell REF. is 0,76 (.030) from front shell).
For panel cutouts, see page 221.

Finishes

Signal and Coaxial
Center Contact Finish: 30 μ inches Gold.

Note: For additional materials and finishes, see introduction page 43.

Part Number

DB111949-43

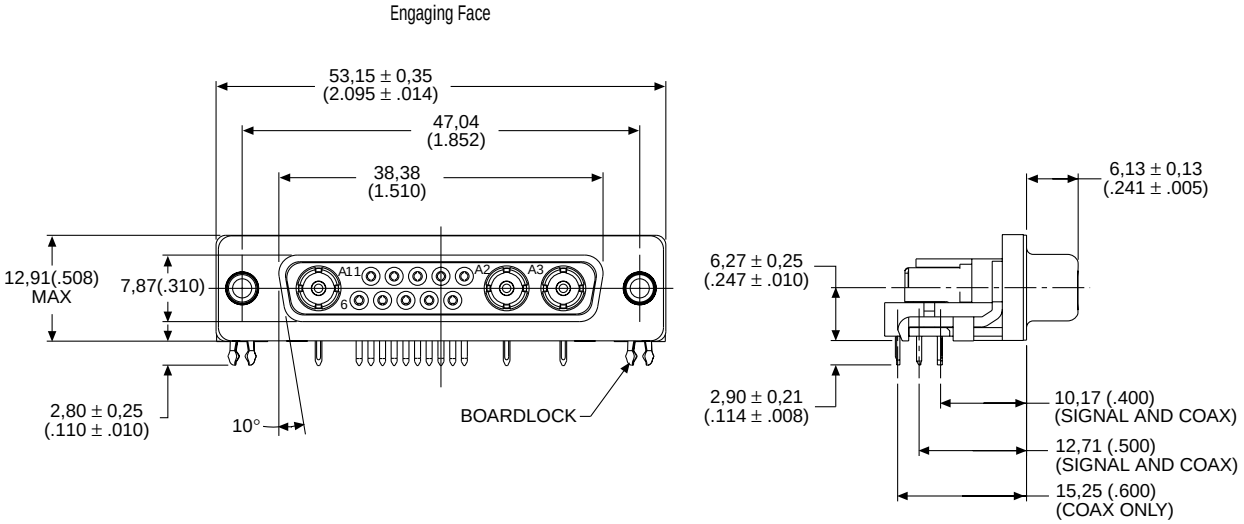

ITT Cannon

Dimensions are shown in mm (inch)
Dimensions subject to change

3C3 Shielded Special — Receptacle only

Receptacle

Materials and Finishes	
Body Material:	Zinc
Body Finish:	Tin
Coaxial Center Contact Finish:	30 μ inches Gold

Note: For additional materials and finishes, see introduction page 43.

Part Number
DAM53512-1405

Reader's Resource
For contact cavity arrangements, see page 223.
For P.C. hole patterns, see page 231.
For panel cutouts, see page 221.

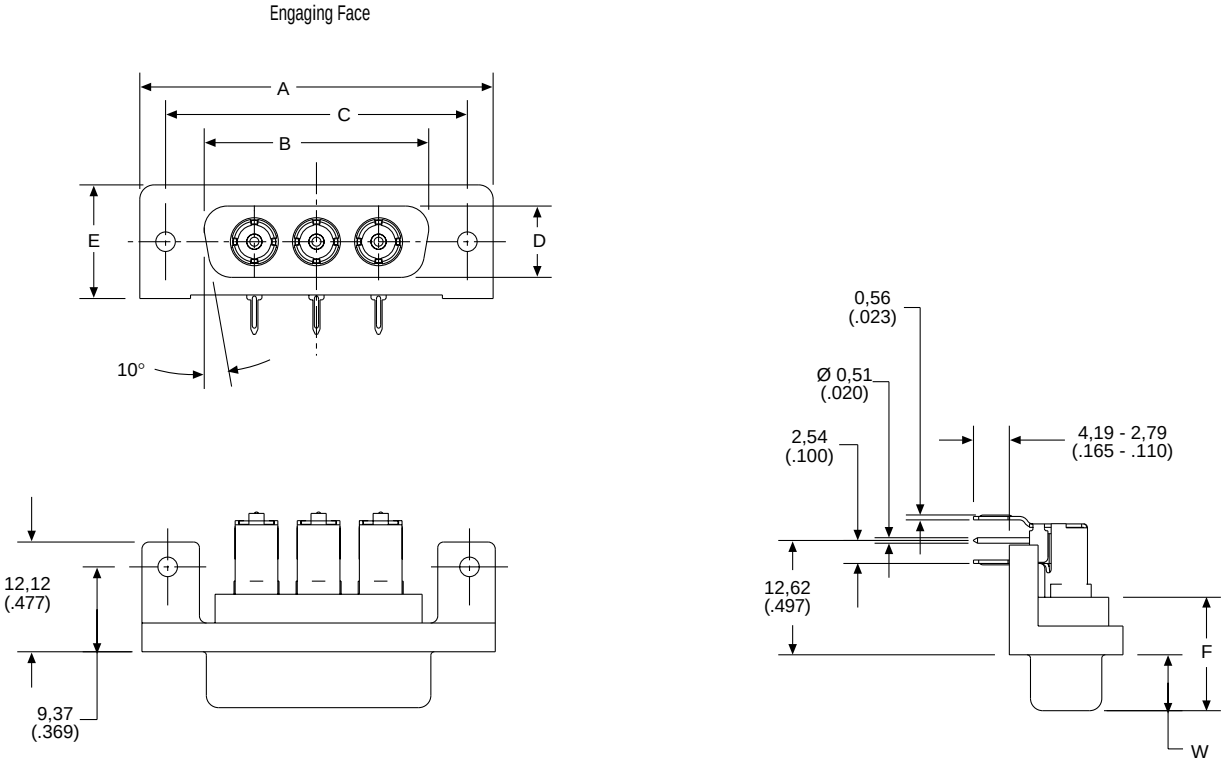

Note: Connector supplied with boardlocks.

Dimensions

Shell Size	A ±0,38 (.015)	B ±0,13 (.005)	C ±0,13 (.005)	D ±0,13 (.005)	E ±0,38 (.015)	F ±0,25 (.010)	W ±0,25 (.010)
DA	39,14 (1.541)	24,66 (.971)	33,32 (1.312)	7,90 (.311)	12,55 (.494)	10,90 (.429)	6,17 (.243)

Coaxial 90° — European Footprint 10,2♦ or 9,4 mm♦♦ (Sizes DE-DC)

Plug

Reader's Resource

For contact cavity arrangements, see page 222.
For P.C. hole patterns, see page 234-235.
For panel cutouts, see page 221.
For alternate bracket configuration (when connectors are supplied without boardlocks), see page 226.
For alternate 50 Ohm coaxial configuration, see page 225.

75 Ohm Part Numbers* with Metal Bracket and Rivnut #4-40 UNC

Shell Size	Layout	Part Number Without Screw Locks Without Boardlocks	Part Number Without Screw Locks With Boardlocks	Part Number With Screw Locks Without Boardlocks	Part Number With Screw Locks With Boardlocks
DE	5W1	DEMP5C1PVK87	DEMC5C1PVK87	DEMD5C1PVK87	DEMG5C1PVK87
DA	7W2	DAMP7C2PVK87	DAMC7C2PVK87	DAMD7C2PVK87	DAMG7C2PVK87
DA	11W1	DAMP11C1PVK87	DAMC11C1PVK87	DAMD11C1PVK87	DAMG11C1PVK87
DA	3W3	DAMP3C3PVK87	DAMC3C3PVK87	DAMD3C3PVK87	DAMG3C3PVK87
DA	3WK3♣	DAMP3CK3PVK87TM	DAMC3CK3PVK87TM	DAMD3CK3PVK87TM	DAMG3CK3PVK87TM
DB	5W5	DBMP5C5PVK87	DBMC5C5PVK87	DBMD5C5PVK87	DBMG5C5PVK87
DB	9W4	DBMP9C4PVK87	DBMC9C4PVK87	DBMD9C4PVK87	DBMG9C4PVK87
DB	13W3	DBMP13C3PVK87	DBMC13C3PVK87	DBMD13C3PVK87	DBMG13C3PVK87
DB	17W2	DBMP17C2PVK87	DBMC17C2PVK87	DBMD17C2PVK87	DBMG17C2PVK87
DB	21W1	DBMP21C1PVK87	DBMC21C1PVK87	DBMD21C1PVK87	DBMG21C1PVK87
DC	8W8	DCMP8C8PVK87	DCMC8C8PVK87	DCMD8C8PVK87	DCMG8C8PVK87
DC	13W6	DCMP13C6PVK87	DCMC13C6PVK87	DCMD13C6PVK87	DCMG13C6PVK87
DC	17W5	DCMP17C5PVK87	DCMC17C5PVK87	DCMD17C5PVK87	DCMG17C5PVK87
DC	21WA4	DCMP21CA4PVK87	DCMC21CA4PVK87	DCMD21CA4PVK87	DCMG21CA4PVK87
DC	25W3	DCMP25C3PVK87	DCMC25C3PVK87	DCMD25C3PVK87	DCMG25C3PVK87
DC	27W2	DCMP27C2PVK87	DCMC27C2PVK87	DCMD27C2PVK87	DCMG27C2PVK87

For M3 threads replace MP with MS, MC with ML, MD with MO, MG with MJ.
Notes: * For 50 Ohm Coaxial substitute X for C. Example: DEMP5X1PVK87
For tin plated PC tails add A226 (signal contacts only). Example: DEMP5C1PVK87A226
For performance class 2 substitute K127 for K87. Example: DEMP5C1PVK127
For DD shell sizes (Standard footprint) see page 46.
♣ Keyed.

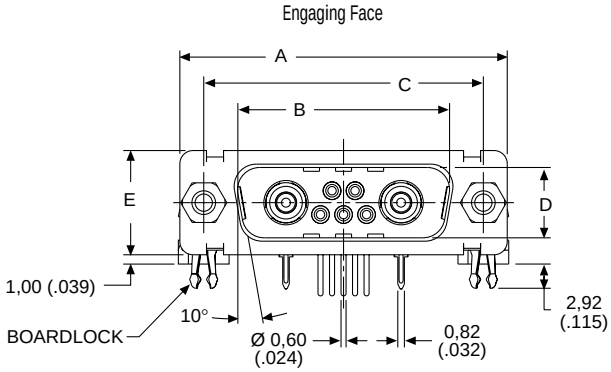

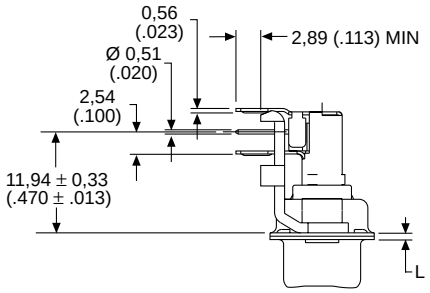

Screw lock, boardlock, and signal contacts removed for clarity

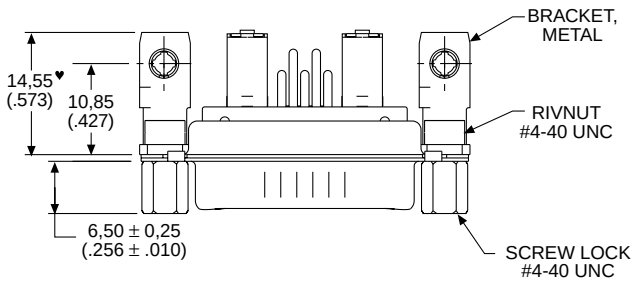

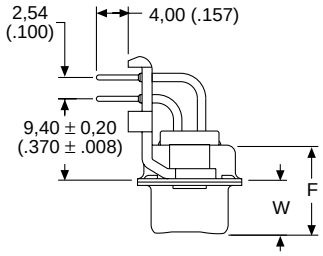

Screw lock, boardlock, and coaxial contact removed for clarity

Note: ♥ Dimension varies with alternate bracket configuration, see Reader's Resource page 226.

Dimensions

Shell Size	A ±0,38 (.015)	B ±0,13 (.005)	C ±0,13 (.005)	D ±0,13 (.005)	E ±0,38 (.015)	F ±0,25 (.010)	W ±0,368 (.0145)	W ±0,41 (.016)	L ±0,25 (.010)
DE	30,81 (1.213)	16,92 (.666)	24,99 (.984)	8,36 (.329)	12,55 (.494)	10,72 (.422)	6,693 (.2635)	—	0,76 (.030)
DA	39,14 (1.541)	25,25 (.994)	33,32 (1.312)	8,36 (.329)	12,55 (.494)	10,72 (.422)	6,693 (.2635)	—	0,76 (.030)
DB	53,04 (2.088)	38,96 (1.534)	47,04 (1.852)	8,36 (.329)	12,55 (.494)	10,82 (.426)	—	6,84 (.269)	0,99 (.039)
DC	69,32 (2.729)	55,42 (2.182)	63,50 (2.500)	8,36 (.329)	12,55 (.494)	10,82 (.426)	—	6,84 (.269)	0,99 (.039)

♦ Connector footprint measured from the front shell.
♦♦ Connector footprint measured from the rear shell.

Dimensions are shown in mm (inch)
Dimensions subject to change

Coaxial 90° — European Footprint 10,2♦ or 9,4 mm♦♦ (Sizes DE-DC)

Receptacle

Reader's Resource

For contact cavity arrangements, see page 223.
For P.C. hole patterns, see pages 236-237.
For panel cutouts, see page 221.
For alternate bracket configuration (when connectors are supplied without boardlocks), see page 226.
For alternate 50 Ohm coaxial configuration, see page 225.

75 Ohm Part Numbers* with Metal Bracket and Rivnut #4-40 UNC

Shell Size	Layout	Part Number Without Screw Locks Without Boardlocks	Part Number Without Screw Locks With Boardlocks	Part Number With Screw Locks Without Boardlocks	Part Number With Screw Locks With Boardlocks
DE	5W1	DEMP5C1SVA197	DEMC5C1SVA197	DEMD5C1SVA197	DEMG5C1SVA197
DA	7W2	DAMP7C2SVA197	DAMC7C2SVA197	DAMD7C2SVA197	DAMG7C2SVA197
DA	11W1	DAMP11C1SVA197	DAMC11C1SVA197	DAMD11C1SVA197	DAMG11C1SVA197
DA	3W3	DAMP3C3SVA197	DAMC3C3SVA197	DAMD3C3SVA197	DAMG3C3SVA197
DA	3WK3♣	DAMP3CK3SVA197TM	DAMC3CK3SVA197TM	DAMD3CK3SVA197TM	DAMG3CK3SVA197TM
DB	5W5	DBMP5C5SVA197	DBMC5C5SVA197	DBMD5C5SVA197	DBMG5C5SVA197
DB	9W4	DBMP9C4SVA197	DBMC9C4SVA197	DBMD9C4SVA197	DBMG9C4SVA197
DB	13W3	DBMP13C3SVA197	DBMC13C3SVA197	DBMD13C3SVA197	DBMG13C3SVA197
DB	17W2	DBMP17C2SVA197	DBMC17C2SVA197	DBMD17C2SVA197	DBMG17C2SVA197
DB	21W1	DBMP21C1SVA197	DBMC21C1SVA197	DBMD21C1SVA197	DBMG21C1SVA197
DC	8W8	DCMP8C8SVA197	DCMC8C8SVA197	DCMD8C8SVA197	DCMG8C8SVA197
DC	13W6	DCMP13C6SVA197	DCMC13C6SVA197	DCMD13C6SVA197	DCMG13C6SVA197
DC	17W5	DCMP17C5SVA197	DCMC17C5SVA197	DCMD17C5SVA197	DCMG17C5SVA197
DC	21WA4	DCMP21CA4SVA197	DCMC21CA4SVA197	DCMD21CA4SVA197	DCMG21CA4SVA197
DC	25W3	DCMP25C3SVA197	DCMC25C3SVA197	DCMD25C3SVA197	DCMG25C3SVA197
DC	27W2	DCMP27C2SVA197	DCMC27C2SVA197	DCMD27C2SVA197	DCMG27C2SVA197

For M3 threads replace MP with MS, MC with ML, MD with MO, MG with MJ.
Notes: * For 50 Ohm Coaxial substitute X for C. Example: DEMP5X1SVA197
For performance class 2 substitute K126 for A197. Example: DEMP5C1SVK126
For DD shell sizes (standard footprint) see page 47.
♣ Keyed.

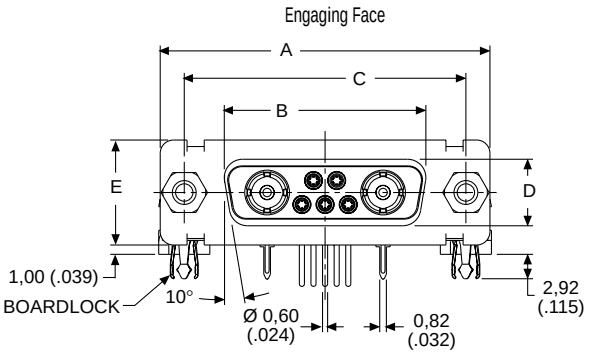

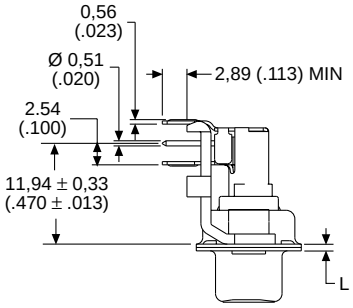

Screw lock, boardlock, and signal contacts removed for clarity

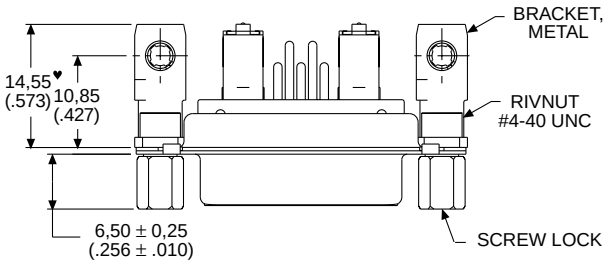

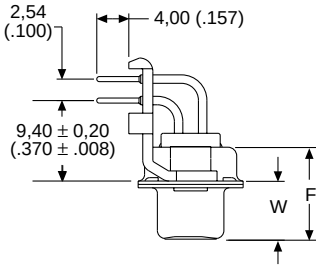

Screw lock, boardlock, and coaxial contact removed for clarity

Note: ♥ Dimension varies with alternate bracket configuration, see Reader's Resource page 226.

Dimensions

Shell Size	A ±0,38 (.015)	B ±0,13 (.005)	C ±0,13 (.005)	D ±0,13 (.005)	E ±0,38 (.015)	F ±0,25 (.010)	W ±0,38 (.015)	L ±0,25 (.010)
DE	30,81 (1.213)	16,33 (.643)	24,99 (.984)	7,90 (.311)	12,55 (.494)	10,90 (.429)	6,94 (.273)	0,76 (.030)
DA	39,14 (1.541)	24,66 (.971)	33,32 (1.312)	7,90 (.311)	12,55 (.494)	10,90 (.429)	6,94 (.273)	0,76 (.030)
DB	53,04 (2.088)	38,38 (1.511)	47,04 (1.852)	7,90 (.311)	12,55 (.494)	10,90 (.429)	6,94 (.273)	0,76 (.030)
DC	69,32 (2.729)	54,84 (2.159)	63,50 (2.500)	7,90 (.311)	12,55 (.494)	10,90 (.429)	6,94 (.273)	0,76 (.030)

♦ Connector footprint measured from the front shell.
♦♦ Connector footprint measured from the rear shell.

Coaxial Straight — Standard PC Tails (Sizes DE-DC)

Plug

Reader's Resource

For contact cavity arrangements, see page 222.
For P.C. hole patterns, see pages 238-239.
For panel cutouts, see page 221.
For alternate 50 Ohm coaxial configuration, see page 225.

75 Ohm Part Numbers* with Standoff #4-40 UNC

Shell Size	Layout	Part Number Without Screw Locks Without Boardlocks	Part Number Without Screw Locks With Boardlocks	Part Number With Screw Locks With Boardlocks
DE	5W1	DEMV5C1PNK87	DEMZ5C1PNK87	DEMN5C1PNK87
DA	7W2	DAMV7C2PNK87	DAMZ7C2PNK87	DAMN7C2PNK87
DA	11W1	DAMV11C1PNK87	DAMZ11C1PNK87	DAMN11C1PNK87
DA	3W3	DAMV3C3PNK87	DAMZ3C3PNK87	DAMN3C3PNK87
DA	3WK3♣	DAMV3CK3PNK87TM	DAMZ3CK3PNK87TM	DAMN3CK3PNK87TM
DB	5W5	DBMV5C5PNK87	DBMZ5C5PNK87	DBMN5C5PNK87
DB	9W4	DBMV9C4PNK87	DBMZ9C4PNK87	DBMN9C4PNK87
DB	13W3	DBMV13C3PNK87	DBMZ13C3PNK87	DBMN13C3PNK87
DB	17W2	DBMV17C2PNK87	DBMZ17C2PNK87	DBMN17C2PNK87
DB	21W1	DBMV21C1PNK87	DBMZ21C1PNK87	DBMN21C1PNK87
DC	8W8	DCMV8C8PNK87	DCMZ8C8PNK87	DCMN8C8PNK87
DC	13W6	DCMV13C6PNK87	DCMZ13C6PNK87	DCMN13C6PNK87
DC	17W5	DCMV17C5PNK87	DCMZ17C5PNK87	DCMN17C5PNK87
DC	21WA4	DCMV21CA4PNK87	DCMZ21CA4PNK87	DCMN21CA4PNK87
DC	25W3	DCMV25C3PNK87	DCMZ25C3PNK87	DCMN25C3PNK87
DC	27W2	DCMV27C2PNK87	DCMZ27C2PNK87	DCMN27C2PNK87

Notes: * For 50 Ohm Coaxial substitute X for C. Example: DEMV5X1PNK87
For contacts with 30 microinches gold substitute K127 for K87. Example: DEMN5C1PNK127
For DD shell sizes, see page 54.
♣ Keyed.

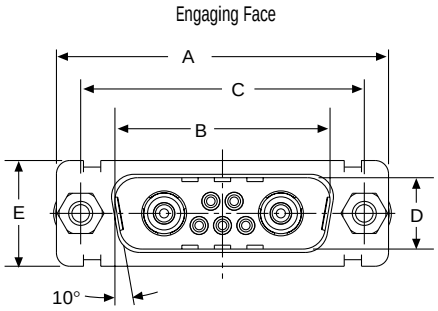

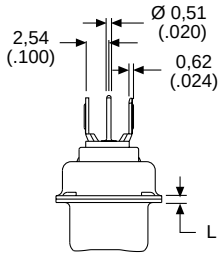

Screw lock, boardlock, and signal contacts removed for clarity

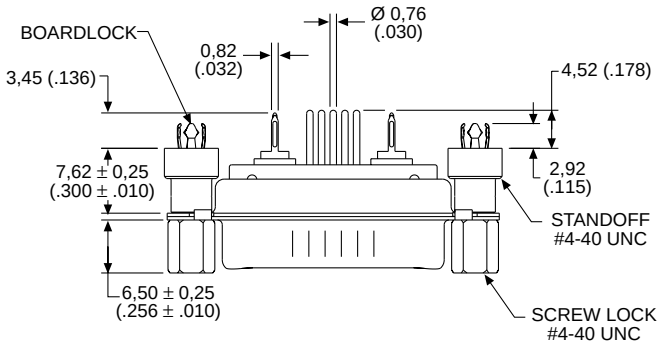

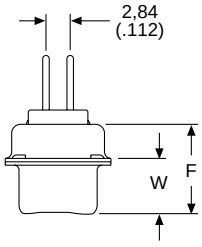

Screw lock, boardlock, and coaxial contact removed for clarity

Dimensions

Shell Size	A ±0,38 (.015)	B ±0,13 (.005)	C ±0,13 (.005)	D ±0,13 (.005)	E ±0,38 (.015)	F ±0,25 (.010)	W ±0,368 (.0145)	W ±0,41 (.016)	L ±0,25 (.010)
DE	30,81 (1.213)	16,92 (.666)	24,99 (.984)	8,36 (.329)	12,55 (.494)	10,72 (.422)	6,693 (.2635)	—	0,76 (.030)
DA	39,14 (1.541)	25,25 (.994)	33,32 (1.312)	8,36 (.329)	12,55 (.494)	10,72 (.422)	6,693 (.2635)	—	0,76 (.030)
DB	53,04 (2.088)	38,96 (1.534)	47,04 (1.852)	8,36 (.329)	12,55 (.494)	10,82 (.426)	—	6,84 (.269)	0,99 (.039)
DC	69,32 (2.729)	55,42 (2.182)	63,50 (2.500)	8,36 (.329)	12,55 (.494)	10,82 (.426)	—	6,84 (.269)	0,99 (.039)

Dimensions are shown in mm (inch)
Dimensions subject to change

Coaxial Straight — Standard PC Tails (Sizes DE-DC)

Receptacle

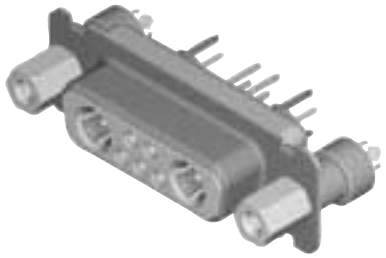

Reader's Resource

For contact cavity arrangements, see page 223.
For P.C. hole patterns, see pages 241-242.
For panel cutouts, see page 221.
For alternate 50 Ohm coaxial configuration, see page 225.

75 Ohm Part Numbers* with Standoff #4-40 UNC

Shell Size	Layout	Part Number Without Screw Locks Without Boardlocks	Part Number Without Screw Locks With Boardlocks	Part Number With Screw Locks With Boardlocks
DE	5W1	DEMV5C1SNA197	DEMZ5C1SNA197	DEMN5C1SNA197
DA	7W2	DAMV7C2SNA197	DAMZ7C2SNA197	DAMN7C2SNA197
DA	11W1	DAMV11C1SNA197	DAMZ11C1SNA197	DAMN11C1SNA197
DA	3W3	DAMV3C3SNA197	DAMZ3C3SNA197	DAMN3C3SNA197
DA	3WK3♣	DAMV3CK3SNA197TM	DAMZ3CK3SNA197TM	DAMN3CK3SNA197TM
DB	5W5	DBMV5C5SNA197	DBMZ5C5SNA197	DBMN5C5SNA197
DB	9W4	DBMV9C4SNA197	DBMZ9C4SNA197	DBMN9C4SNA197
DB	13W3	DBMV13C3SNA197	DBMZ13C3SNA197	DBMN13C3SNA197
DB	17W2	DBMV17C2SNA197	DBMZ17C2SNA197	DBMN17C2SNA197
DB	21W1	DBMV21C1SNA197	DBMZ21C1SNA197	DBMN21C1SNA197
DC	8W8	DCMV8C8SNA197	DCMZ8C8SNA197	DCMN8C8SNA197
DC	13W6	DCMV13C6SNA197	DCMZ13C6SNA197	DCMN13C6SNA197
DC	17W5	DCMV17C5SNA197	DCMZ17C5SNA197	DCMN17C5SNA197
DC	21WA4	DCMV21CA4SNA197	DCMZ21CA4SNA197	DCMN21CA4SNA197
DC	25W3	DCMV25C3SNA197	DCMZ25C3SNA197	DCMN25C3SNA197
DC	27W2	DCMV27C2SNA197	DCMZ27C2SNA197	DCMN27C2SNA197

Notes: * For 50 Ohm Coaxial substitute X for C. Example: DEMV5X1SNA197
For contacts with 30 microinches gold substitute K126 for A197. Example: DEMN5C1SNK126
For DD shell sizes, see page 55.
♣ Keyed.

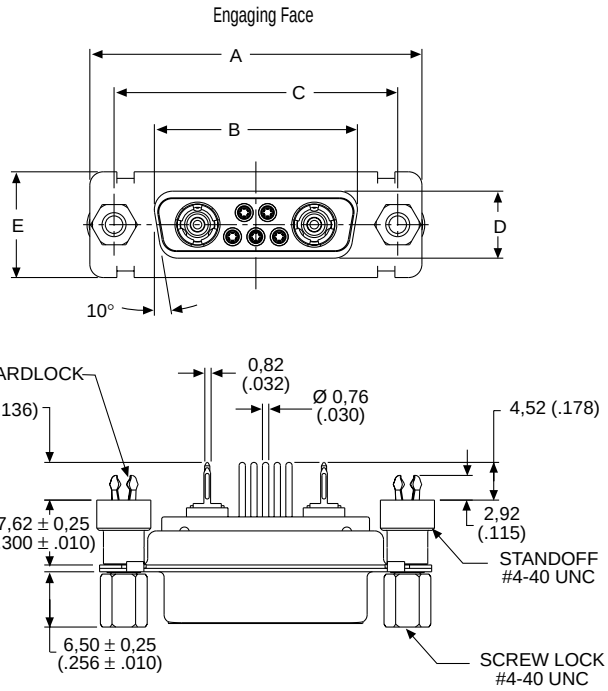

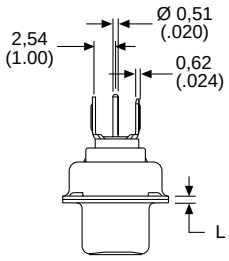

Hardware and signal contacts removed for clarity

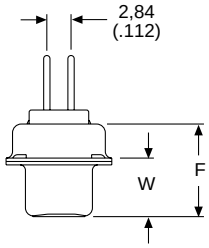

Hardware and coaxial contact removed for clarity

Dimensions

Shell Size	A ±0,38 (.015)	B ±0,13 (.005)	C ±0,13 (.005)	D ±0,13 (.005)	E ±0,38 (.015)	F 0,25 (.010)	W ±0,38 (.015)	L ±0,25 (.010)
DE	30,81 (1.213)	16,33 (.643)	24,99 (.984)	7,90 (.311)	12,55 (.494)	10,90 (.429)	6,94 (.273)	0,76 (.030)
DA	39,14 (1.541)	24,66 (.971)	33,32 (1.312)	7,90 (.311)	12,55 (.494)	10,90 (.429)	6,94 (.273)	0,76 (.030)
DB	53,04 (2.088)	38,38 (1.511)	47,04 (1.852)	7,90 (.311)	12,55 (.494)	10,90 (.429)	6,94 (.273)	0,76 (.030)
DC	69,32 (2.729)	54,84 (2.159)	63,50 (2.500)	7,90 (.311)	12,55 (.494)	10,90 (.429)	6,94 (.273)	0,76 (.030)

Coaxial Straight — Standard PC Tails (Size DD)

Plug

75 Ohm Part Numbers* with Standoff #4-40 UNC

Shell Size	Layout	Part Number Without Screw Locks Without Boardlocks	Part Number Without Screw Locks With Boardlocks	Part Number With Screw Locks With Boardlocks
DD	24W7	DDMV24C7PNK87	DDMZ24C7PNK87	DDMN24C7PNK87
DD	36W4	DDMV36C4PNK87	DDMZ36C4PNK87	DDMN36C4PNK87
DD	43W2	DDMV43C2PNK87	DDMZ43C2PNK87	DDMN43C2PNK87
DD	47W1	DDMV47C1PNK87	DDMZ47C1PNK87	DDMN47C1PNK87

Notes: * For 50 Ohm Coaxial substitute X for C. Example: DDMV24X7PNK87
For contacts with 30 microinches gold substitute K127 for K87. Example: DDMN24C7PNK127

Reader's Resource
For contact cavity arrangements, see page 222.
For P.C. hole patterns, see page 240.
For panel cutouts, see page 221.
For alternate 50 Ohm coaxial configuration, see page 225.

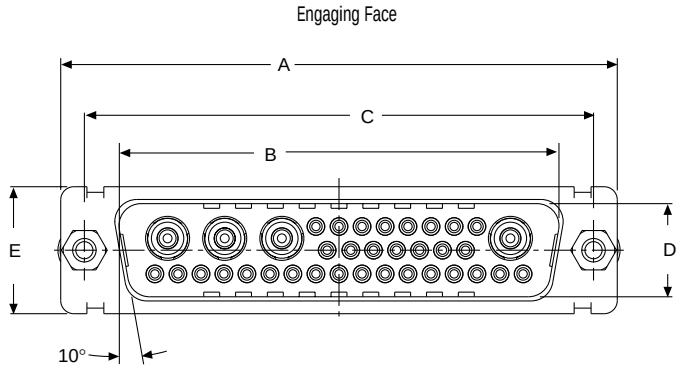

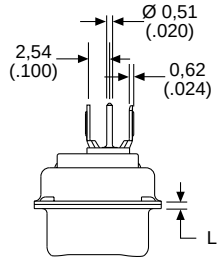

Hardware and signal contacts removed for clarity

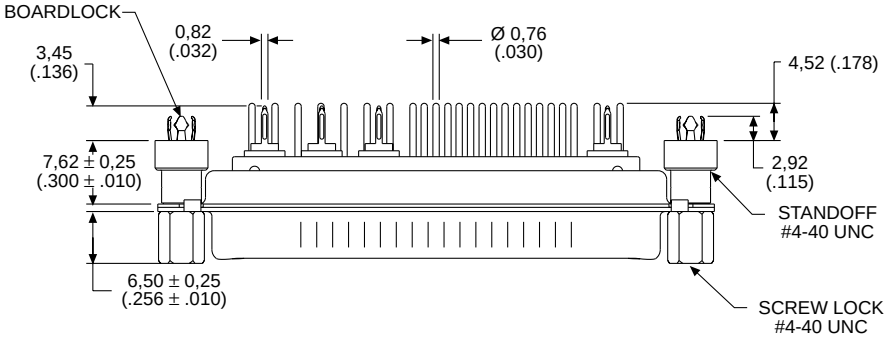

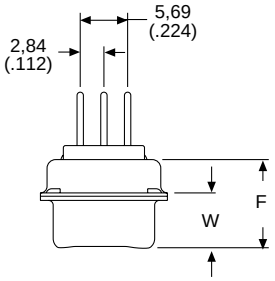

Hardware and coaxial contact removed for clarity

Dimensions

Shell Size	A ±0,38 (.015)	B ±0,13 (.005)	C ±0,13 (.005)	D ±0,13 (.005)	E ±0,38 (.015)	F ±0,25 (.010)	W ±0,41 (.016)	L ±0,25 (.010)
DD	66,93 (2.635)	52,81 (2.079)	61,11 (2.406)	11,07 (.436)	15,37 (.605)	10,82 (.426)	6,84 (.269)	0,99 (.039)

Dimensions are shown in mm (inch)
Dimensions subject to change

Coaxial Straight — Standard PC Tails (Size DD)

Receptacle

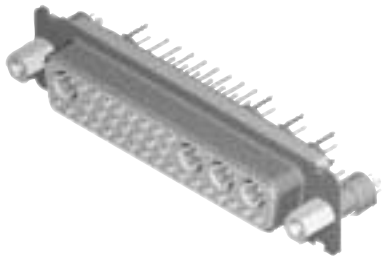

75 Ohm Part Numbers* with Standoff #4-40 UNC

Shell Size	Layout	Part Number Without Screw Locks Without Boardlocks	Part Number Without Screw Locks With Boardlocks	Part Number With Screw Locks With Boardlocks
DD	24W7	DDMV24C7SNA197	DDMZ24C7SNA197	DDMN24C7SNA197
DD	36W4	DDMV36C4SNA197	DDMZ36C4SNA197	DDMN36C4SNA197
DD	43W2	DDMV43C2SNA197	DDMZ43C2SNA197	DDMN43C2SNA197
DD	47W1	DDMV47C1SNA197	DDMZ47C1SNA197	DDMN47C1SNA197

Notes: * For 50 Ohm Coaxial substitute X for C. Example: DDMV24X7SNA197
For contacts with 30 microinches gold substitute K126 for A197. Example: DDMN24C7SNK126

Reader's Resource
For contact cavity arrangements, see page 223.
For P.C. hole patterns, see page 243.
For panel cutouts, see page 221.
For alternate 50 Ohm coaxial configuration, see page 225.

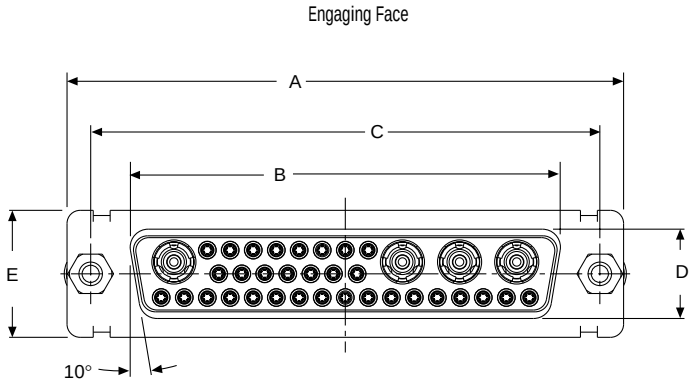

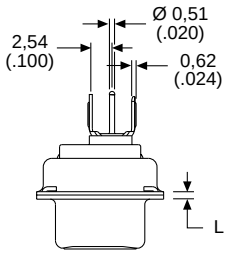

Hardware and signal contacts removed for clarity

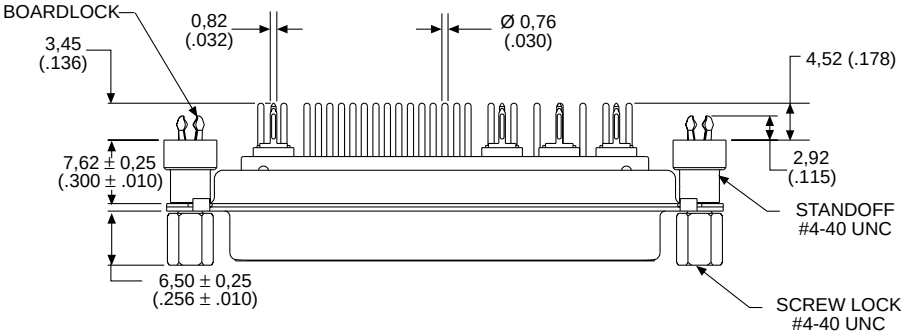

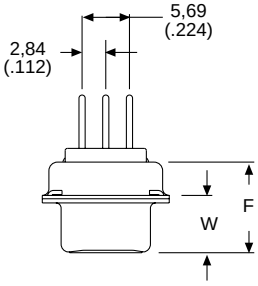

Hardware and coaxial contact removed for clarity

Dimensions

Shell Size	A ±0,38 (.015)	B ±0,13 (.005)	C ±0,13 (.005)	D ±0,13 (.005)	E ±0,38 (.015)	F ±0,25 (.010)	W ±0,38 (.015)	L ±0,25 (.010)
DD	66,93 (2.635)	52,42 (2.064)	61,11 (2.406)	10,74 (.423)	15,37 (.605)	10,90 (.429)	6,94 (.273)	0,76 (.030)

Coaxial Straight — European PC Tails (Sizes DE-DC)

Plug

Reader's Resource

For contact cavity arrangements, see page 222.
For P.C. hole patterns, see pages 238-239.
For panel cutouts, see page 221.
For alternate 50 Ohm coaxial configuration, see page 225.

75 Ohm Part Numbers* with Standoff #4-40 UNC

Shell Size	Layout	Part Number Without Screw Locks Without Boardlocks	Part Number Without Screw Locks With Boardlocks	Part Number With Screw Locks With Boardlocks
DE	5W1	DEMV5C1PYK87	DEMZ5C1PYK87	DEMN5C1PYK87
DA	7W2	DAMV7C2PYK87	DAMZ7C2PYK87	DAMN7C2PYK87
DA	11W1	DAMV11C1PYK87	DAMZ11C1PYK87	DAMN11C1PYK87
DA	3W3	DAMV3C3PYK87	DAMZ3C3PYK87	DAMN3C3PYK87
DA	3WK3♣	DAMV3CK3PYK87TM	DAMZ3CK3PYK87TM	DAMN3CK3PYK87TM
DB	5W5	DBMV5C5PYK87	DBMZ5C5PYK87	DBMN5C5PYK87
DB	9W4	DBMV9C4PYK87	DBMZ9C4PYK87	DBMN9C4PYK87
DB	13W3	DBMV13C3PYK87	DBMZ13C3PYK87	DBMN13C3PYK87
DB	17W2	DBMV17C2PYK87	DBMZ17C2PYK87	DBMN17C2PYK87
DB	21W1	DBMV21C1PYK87	DBMZ21C1PYK87	DBMN21C1PYK87
DC	8W8	DCMV8C8PYK87	DCMZ8C8PYK87	DCMN8C8PYK87
DC	13W6	DCMV13C6PYK87	DCMZ13C6PYK87	DCMN13C6PYK87
DC	17W5	DCMV17C5PYK87	DCMZ17C5PYK87	DCMN17C5PYK87
DC	21WA4	DCMV21CA4PYK87	DCMZ21CA4PYK87	DCMN21CA4PYK87
DC	25W3	DCMV25C3PYK87	DCMZ25C3PYK87	DCMN25C3PYK87
DC	27W2	DCMV27C2PYK87	DCMZ27C2PYK87	DCMN27C2PYK87

For M3 threads replace MV with MT, MZ with MQ, MN with MU.
Notes: * For 50 Ohm Coaxial substitute X for C. Example: DEMV5X1PYK87
For tin plated PC tails add A226 (signal contacts only). Example: DEMV5C1PYK87A226
For performance class 2 substitute K127 for K87. Example: DEMV5C1PYK127
For DD shell sizes, see page 58.
♣ Keyed.

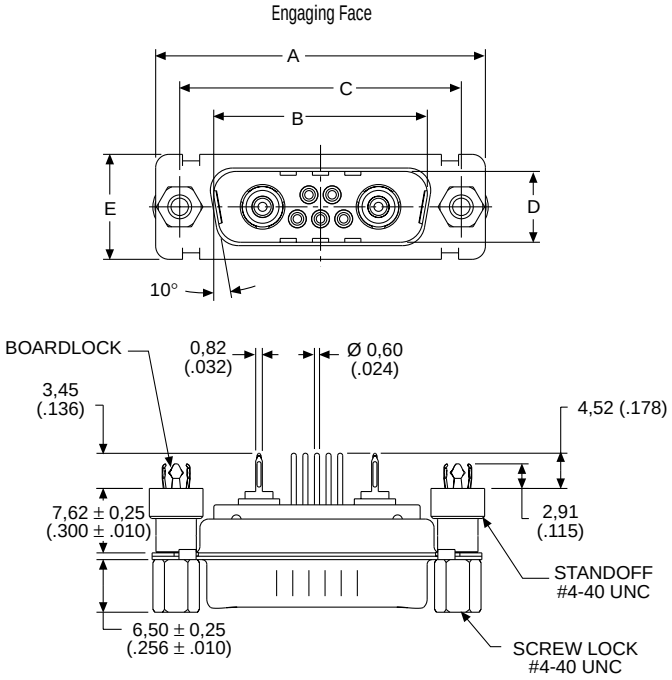

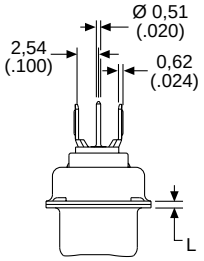

Hardware and signal contacts removed for clarity

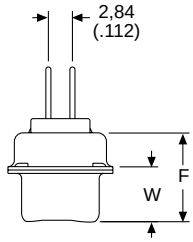

Hardware and coaxial contact removed for clarity

Dimensions

Shell Size	A ±0,38 (.015)	B ±0,13 (.005)	C ±0,13 (.005)	D ±0,13 (.005)	E ±0,38 (.015)	F ±0,25 (.010)	W ±0,368 (.0145)	W ±0,41 (.016)	L ±0,25 (.010)
DE	30,81 (1.213)	16,92 (.666)	24,99 (.984)	8,36 (.329)	12,55 (.494)	10,72 (.422)	6,693 (.2635)	—	0,76 (.030)
DA	39,14 (1.541)	25,25 (.994)	33,32 (1.312)	8,36 (.329)	12,55 (.494)	10,72 (.422)	6,693 (.2635)	—	0,76 (.030)
DB	53,04 (2.088)	38,96 (1.534)	47,04 (1.852)	8,36 (.329)	12,55 (.494)	10,82 (.426)	—	6,84 (.269)	0,99 (.039)
DC	69,32 (2.729)	55,42 (2.182)	63,50 (2.500)	8,36 (.329)	12,55 (.494)	10,82 (.426)	—	6,84 (.269)	0,99 (.039)

Dimensions are shown in mm (inch)
Dimensions subject to change

Coaxial Straight — European PC Tails (Sizes DE-DC)

Receptacle

Reader's Resource

For contact cavity arrangements, see page 223.
For P.C. hole patterns, see pages 241-242.
For panel cutouts, see page 221.
For alternate 50 Ohm coaxial configuration, see page 225.

75 Ohm Part Numbers* with Standoff #4-40 UNC

Shell Size	Layout	Part Number Without Screw Locks Without Boardlocks	Part Number Without Screw Locks With Boardlocks	Part Number With Screw Locks With Boardlocks
DE	5W1	DEMV5C1SYA197	DEMZ5C1SYA197	DEMN5C1SYA197
DA	7W2	DAMV7C2SYA197	DAMZ7C2SYA197	DAMN7C2SYA197
DA	11W1	DAMV11C1SYA197	DAMZ11C1SYA197	DAMN11C1SYA197
DA	3W3	DAMV3C3SYA197	DAMZ3C3SYA197	DAMN3C3SYA197
DA	3WK3♣	DAMV3CK3SYA197TM	DAMZ3CK3SYA197TM	DAMN3CK3SYA197TM
DB	5W5	DBMV5C5SYA197	DBMZ5C5SYA197	DBMN5C5SYA197
DB	9W4	DBMV9C4SYA197	DBMZ9C4SYA197	DBMN9C4SYA197
DB	13W3	DBMV13C3SYA197	DBMZ13C3SYA197	DBMN13C3SYA197
DB	17W2	DBMV17C2SYA197	DBMZ17C2SYA197	DBMN17C2SYA197
DB	21W1	DBMV21C1SYA197	DBMZ21C1SYA197	DBMN21C1SYA197
DC	8W8	DCMV8C8SYA197	DCMZ8C8SYA197	DCMN8C8SYA197
DC	13W6	DCMV13C6SYA197	DCMZ13C6SYA197	DCMN13C6SYA197
DC	17W5	DCMV17C5SYA197	DCMZ17C5SYA197	DCMN17C5SYA197
DC	21WA4	DCMV21CA4SYA197	DCMZ21CA4SYA197	DCMN21CA4SYA197
DC	25W3	DCMV25C3SYA197	DCMZ25C3SYA197	DCMN25C3SYA197
DC	27W2	DCMV27C2SYA197	DCMZ27C2SYA197	DCMN27C2SYA197

For M3 threads replace MV with MT, MZ with MQ, MN with MU.
Notes: * For 50 Ohm Coaxial substitute X for C. Example: DEMV5X1SYA197
For performance class 2 substitute K126 for A197. Example: DEMV5C1SYK126
For DD shell sizes, see page 59.
♣ Keyed.

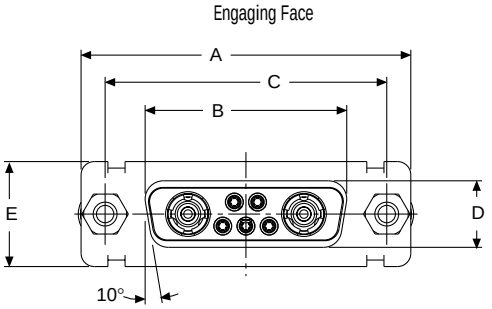

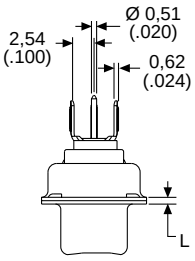

Hardware and signal contacts removed for clarity

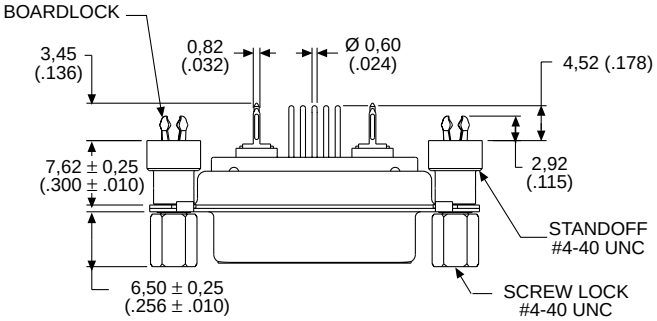

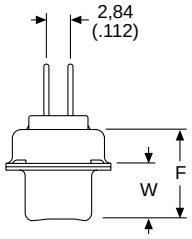

Hardware and coaxial contact removed for clarity

Dimensions

Shell Size	A ±0.38 (.015)	B ±0,13 (.005)	C ±0,13 (.005)	D ±0,13 (.005)	E ±0,38 (.015)	F ±0,25 (.010)	W ±0,38 (.015)	L ±0,25 (.010)
DE	30,81 (1.213)	16,33 (.643)	24,99 (.984)	7,90 (.311)	12,55 (.494)	10,90 (.429)	6,94 (.273)	0,76 (.030)
DA	39,14 (1.541)	24,66 (.971)	33,32 (1.312)	7,90 (.311)	12,55 (.494)	10,90 (.429)	6,94 (.273)	0,76 (.030)
DB	53,04 (2.088)	38,38 (1.511)	47,04 (1.852)	7,90 (.311)	12,55 (.494)	10,90 (.429)	6,94 (.273)	0,76 (.030)
DC	69,32 (2.729)	54,84 (2.159)	63,50 (2.500)	7,90 (.311)	12,55 (.494)	10,90 (.429)	6,94 (.273)	0,76 (.030)

Coaxial Straight — European PC Tails (Size DD)

Plug

75 Ohm Part Numbers* with Standoff #4-40 UNC

Shell Size	Layout	Part Number Without Screw Locks Without Boardlocks	Part Number Without Screw Locks With Boardlocks	Part Number With Screw Locks With Boardlocks
DD	24W7	DDMV24C7PYK87	DDMZ24C7PYK87	DDMN24C7PYK87
DD	36W4	DDMV36C4PYK87	DDMZ36C4PYK87	DDMN36C4PYK87
DD	43W2	DDMV43C2PYK87	DDMZ43C2PYK87	DDMN43C2PYK87
DD	47W1	DDMV47C1PYK87	DDMZ47C1PYK87	DDMN47C1PYK87

For M3 threads replace MV with MT, MZ with MQ, MN with MU.
Notes: * For 50 Ohm Coaxial substitute X for C. Example: DDMV24X7PYK87
For tin plated PC tails add A226 (signal contacts only). Example: DDMV24C7PYK87A226
For performance class 2 substitute K127 for K87. Example: DDMV24C7PYK127

Reader's Resource
For contact cavity arrangements, see page 222.
For P.C. hole patterns, see page 240.
For panel cutouts, see page 221.
For alternate 50 Ohm coaxial configuration, see page 225.

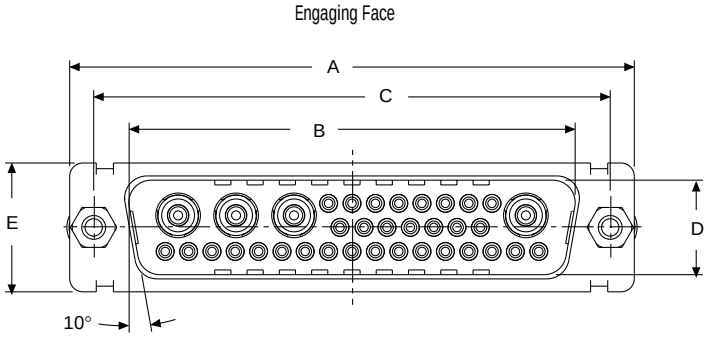

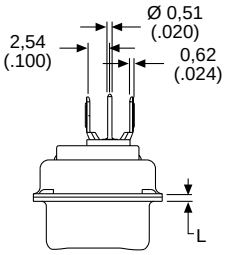

Hardware and signal contacts removed for clarity

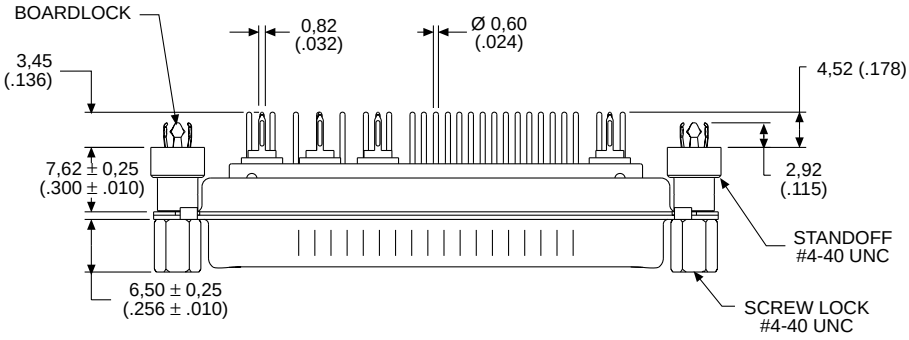

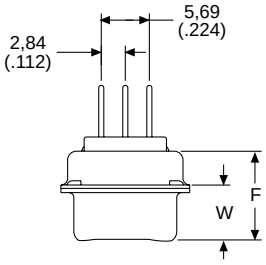

Hardware and coaxial contact removed for clarity

Dimensions

Shell Size	A ±0,38 (.015)	B ±0,13 (.005)	C ±0,13 (.005)	D ±0,13 (.005)	E ±0,38 (.015)	F ±0,25 (.010)	W ±0,41 (.016)	L ±0,25 (.010)
DD	66,93 (2.635)	52,81 (2.079)	61,11 (2.406)	11,07 (.436)	15,37 (.605)	10,82 (.426)	6,84 (.269)	0,99 (.039)

Dimensions are shown in mm (inch)
Dimensions subject to change

Coaxial Straight — European PC Tails (Size DD)

Receptacle

75 Ohm Part Numbers* with Standoff #4-40 UNC

Shell Size	Layout	Part Number Without Screw Locks Without Boardlocks	Part Number Without Screw Locks With Boardlocks	Part Number With Screw Locks With Boardlocks
DD	24W7	DDMV24C7SYA197	DDMZ24C7SYA197	DDMN24C7SYA197
DD	36W4	DDMV36C4SYA197	DDMZ36C4SYA197	DDMN36C4SYA197
DD	43W2	DDMV43C2SYA197	DDMZ43C2SYA197	DDMN43C2SYA197
DD	47W1	DDMV47C1SYA197	DDMZ47C1SYA197	DDMN47C1SYA197

For M3 threads replace MV with MT, MZ with MQ, MN with MU.
Notes: * For 50 Ohm Coaxial substitute X for C. Example: DDMV24X7SYA197
For performance class 2 substitute K126 for A197. Example: DDMV24C7SYK126

Reader's Resource

For contact cavity arrangements, see page 223.
For P.C. hole patterns, see page 243.
For panel cutouts, see page 221.
For alternate 50 Ohm coaxial configuration, see page 225.

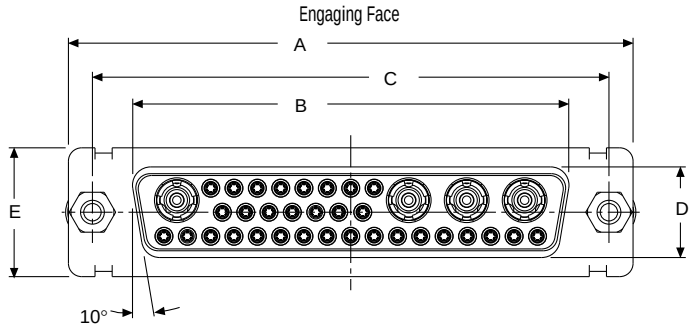

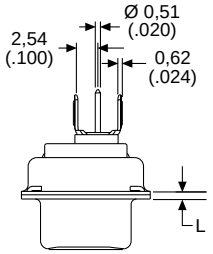

Hardware and signal contacts removed for clarity

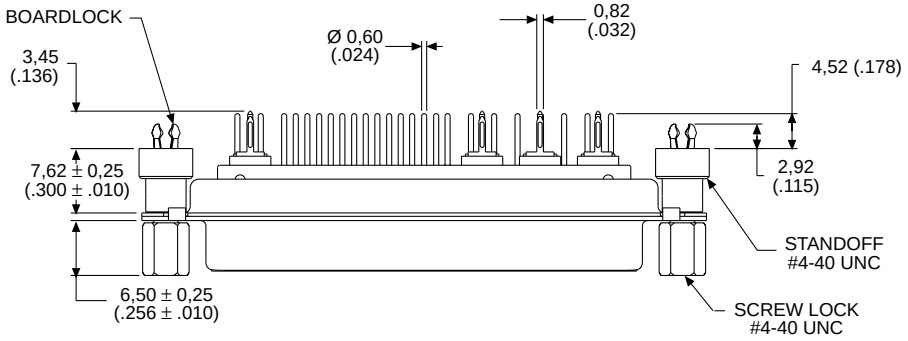

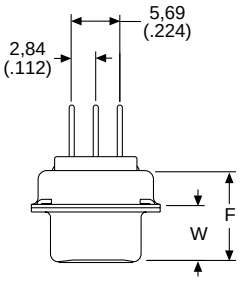

Hardware and coaxial contact removed for clarity

Dimensions

Shell Size	A ±0,38 (.015)	B ±0,13 (.005)	C ±0,13 (.005)	D ±0,13 (.005)	E ±0,38 (.015)	F ±0,25 (.010)	W ±0,38 (.015)	L ±0,25 (.010)
DD	66,93 (2.635)	52,42 (2.064)	61,11 (2.406)	10,74 (.423)	15,37 (.605)	10,90 (.429)	6,94 (.273)	0,76 (.030)

40 A High Power 90° — Standard Footprint .489♦ or .454 inch♦♦ (Sizes DE-DC)

Plug

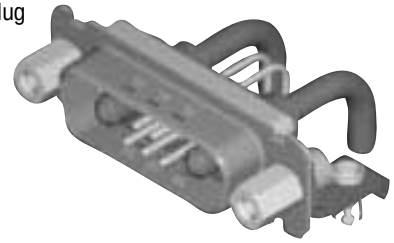

Reader's Resource
For contact cavity arrangements, see page 222.
For P.C. hole patterns, see pages 244-245.
For panel cutouts, see page 221.
For alternate bracket configuration (when connectors are supplied without boardlocks), see page 226.

Part Numbers with Metal Bracket and Rivnut #4-40 UNC

Shell Size	Layout	Part Number Without Screw Locks Without Boardlocks	Part Number Without Screw Locks With Boardlocks	Part Number With Screw Locks Without Boardlocks	Part Number With Screw Locks With Boardlocks
DE	5W1	DEMP5H1PJK87	DEMC5H1PJK87	DEMD5H1PJK87	DEMG5H1PJK87
DA	7W2	DAMP7H2PJK87	DAMC7H2PJK87	DAMD7H2PJK87	DAMG7H2PJK87
DA	11W1	DAMP11H1PJK87	DAMC11H1PJK87	DAMD11H1PJK87	DAMG11H1PJK87
DA	3W3	DAMP3H3PJK87	DAMC3H3PJK87	DAMD3H3PJK87	DAMG3H3PJK87
DA	3WK3♣	DAMP3HK3PJK87TM	DAMC3HK3PJK87TM	DAMD3HK3PJK87TM	DAMG3HK3PJK87TM
DB	5W5	DBMP5H5PJK87	DBMC5H5PJK87	DBMD5H5PJK87	DBMG5H5PJK87
DB	9W4	DBMP9H4PJK87	DBMC9H4PJK87	DBMD9H4PJK87	DBMG9H4PJK87
DB	13W3	DBMP13H3PJK87	DBMC13H3PJK87	DBMD13H3PJK87	DBMG13H3PJK87
DB	17W2	DBMP17H2PJK87	DBMC17H2PJK87	DBMD17H2PJK87	DBMG17H2PJK87
DB	21W1	DBMP21H1PJK87	DBMC21H1PJK87	DBMD21H1PJK87	DBMG21H1PJK87
DC	8W8	DCMP8H8PJK87	DCMC8H8PJK87	DCMD8H8PJK87	DCMG8H8PJK87
DC	13W6	DCMP13H6PJK87	DCMC13H6PJK87	DCMD13H6PJK87	DCMG13H6PJK87
DC	17W5	DCMP17H5PJK87	DCMC17H5PJK87	DCMD17H5PJK87	DCMG17H5PJK87
DC	21WA4	DCMP21HA4PJK87	DCMC21HA4PJK87	DCMD21HA4PJK87	DCMG21HA4PJK87
DC	25W3	DCMP25H3PJK87	DCMC25H3PJK87	DCMD25H3PJK87	DCMG25H3PJK87
DC	27W2	DCMP27H2PJK87	DCMC27H2PJK87	DCMD27H2PJK87	DCMG27H2PJK87

Note: For contacts with 30 microinches gold substitute K127 for K87. Example: DEMP5H1PJK127
For DD shell sizes, see page 62.
♣ Keyed.

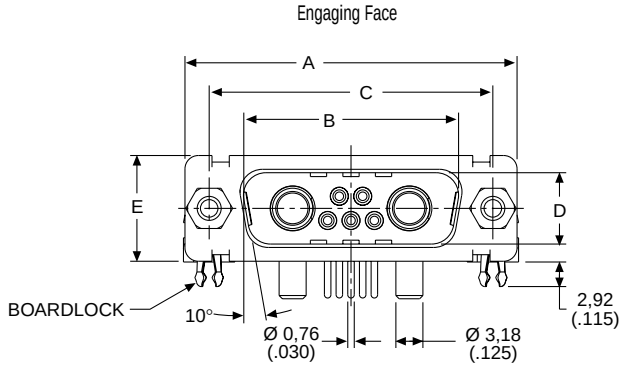

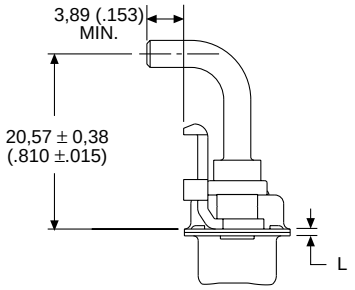

Screw lock, boardlock, and signal contacts removed for clarity

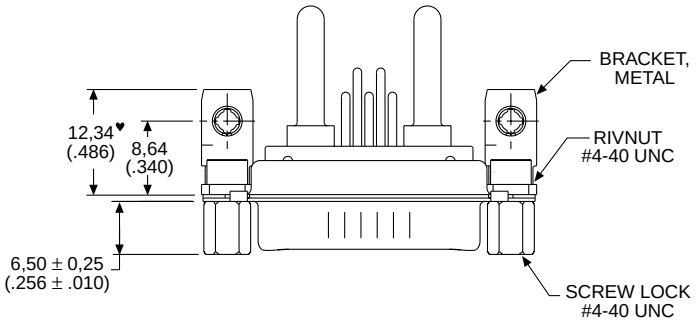

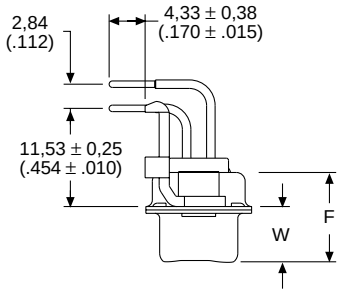

Screw lock, boardlock, and high power contact removed for clarity

Note: ♥ Dimension varies with alternate bracket configuration, see Reader's Resource page 226.

Dimensions

Shell Size	A ±0,38 (.015)	B ±0,13 (.005)	C ±0,13 (.005)	D ±0,13 (.005)	E ±0,38 (.015)	F ±0,25 (.010)	W ±0,368 (.0145)	W ±0,41 (.016)	L ±0,25 (.010)
DE	30,81 (1.213)	16,92 (.666)	24,99 (.984)	8,36 (.329)	12,55 (.494)	10,72 (.422)	6,693 (.2635)	—	0,76 (.030)
DA	39,14 (1.541)	25,25 (.994)	33,32 (1.312)	8,36 (.329)	12,55 (.494)	10,72 (.422)	6,693 (.2635)	—	0,76 (.030)
DB	53,04 (2.088)	38,96 (1.534)	47,04 (1.852)	8,36 (.329)	12,55 (.494)	10,82 (.426)	—	6,84 (.269)	0,99 (.039)
DC	69,32 (2.729)	55,42 (2.182)	63,50 (2.500)	8,36 (.329)	12,55 (.494)	10,82 (.426)	—	6,84 (.269)	0,99 (.039)

♦ Connector footprint measured from the front shell.
♦♦ Connector footprint measured from the rear shell.

Dimensions are shown in mm (inch)
Dimensions subject to change

40 A High Power 90° — Standard Footprint .489♦ or .454 inch♦♦ (Sizes DE-DC)

Receptacle

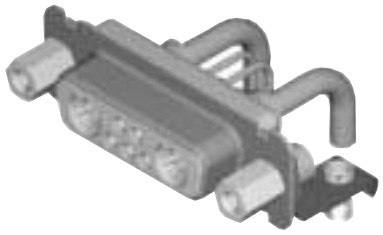

Reader's Resource
For contact cavity arrangements, see page 223.
For P.C. hole patterns, see pages 247-248.
For panel cutouts, see page 221.
For alternate bracket configuration (when connectors are supplied without boardlocks), see page 226.

Part Numbers with Metal Bracket and Rivnut #4-40 UNC

Shell Size	Layout	Part Number Without Screw Locks Without Boardlocks	Part Number Without Screw Locks With Boardlocks	Part Number With Screw Locks Without Boardlocks	Part Number With Screw Locks With Boardlocks
DE	5W1	DEMP5H1SJA197	DEMC5H1SJA197	DEMD5H1SJA197	DEMG5H1SJA197
DA	7W2	DAMP7H2SJA197	DAMC7H2SJA197	DAMD7H2SJA197	DAMG7H2SJA197
DA	11W1	DAMP11H1SJA197	DAMC11H1SJA197	DAMD11H1SJA197	DAMG11H1SJA197
DA	3W3	DAMP3H3SJA197	DAMC3H3SJA197	DAMD3H3SJA197	DAMG3H3SJA197
DA	3WK3♣	DAMP3HK3SJA197TM	DAMC3HK3SJA197TM	DAMD3HK3SJA197TM	DAMG3HK3SJA197TM
DB	5W5	DBMP5H5SJA197	DBMC5H5SJA197	DBMD5H5SJA197	DBMG5H5SJA197
DB	9W4	DBMP9H4SJA197	DBMC9H4SJA197	DBMD9H4SJA197	DBMG9H4SJA197
DB	13W3	DBMP13H3SJA197	DBMC13H3SJA197	DBMD13H3SJA197	DBMG13H3SJA197
DB	17W2	DBMP17H2SJA197	DBMC17H2SJA197	DBMD17H2SJA197	DBMG17H2SJA197
DB	21W1	DBMP21H1SJA197	DBMC21H1SJA197	DBMD21H1SJA197	DBMG21H1SJA197
DC	8W8	DCMP8H8SJA197	DCMC8H8SJA197	DCMD8H8SJA197	DCMG8H8SJA197
DC	13W6	DCMP13H6SJA197	DCMC13H6SJA197	DCMD13H6SJA197	DCMG13H6SJA197
DC	17W5	DCMP17H5SJA197	DCMC17H5SJA197	DCMD17H5SJA197	DCMG17H5SJA197
DC	21WA4	DCMP21HA4SJA197	DCMC21HA4SJA197	DCMD21HA4SJA197	DCMG21HA4SJA197
DC	25W3	DCMP25H3SJA197	DCMC25H3SJA197	DCMD25H3SJA197	DCMG25H3SJA197
DC	27W2	DCMP27H2SJA197	DCMC27H2SJA197	DCMD27H2SJA197	DCMG27H2SJA197

Note: For contacts with 30 microinches of gold substitute K126 for A197. Example: DEMP5H1SJK126
For DD shell sizes, see page 63.
♣ Keyed.

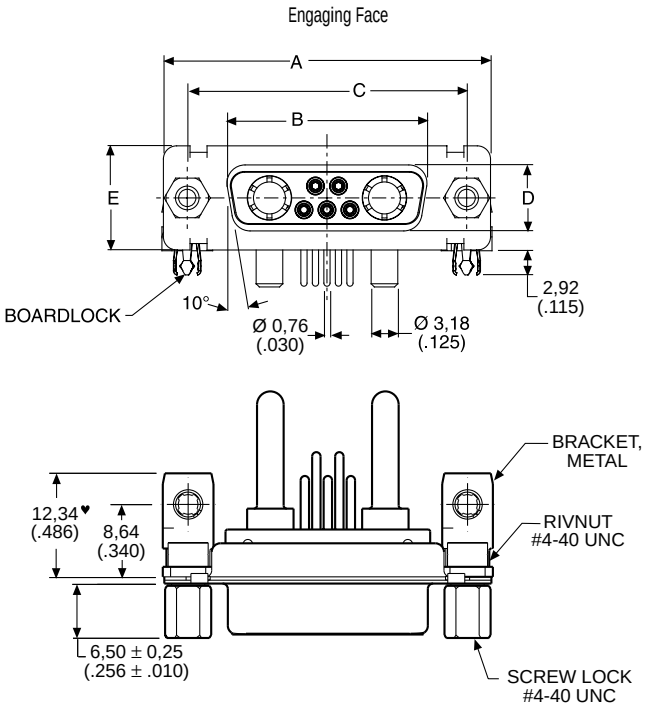

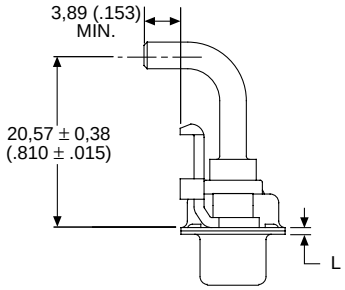

Screw lock, boardlock, and signal contacts removed for clarity

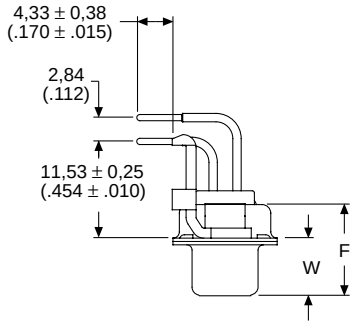

Screw lock, boardlock, and high power contact removed for clarity

Note: ♥ Dimension varies with alternate bracket configuration, see Reader's Resource page 226.

Dimensions

Shell Size	A ±0,38 (.015)	B ±0,13 (.005)	C ±0,13 (.005)	D ±0,13 (.005)	E ±0,38 (.015)	F ±0,25 (.010)	W ±0,38 (.015)	L ±0,25 (.010)
DE	30,81 (1.213)	16,33 (.643)	24,99 (.984)	7,90 (.311)	12,55 (.494)	10,90 (.429)	6,94 (.273)	0,76 (.030)
DA	39,14 (1.541)	24,66 (.971)	33,32 (1.312)	7,90 (.311)	12,55 (.494)	10,90 (.429)	6,94 (.273)	0,76 (.030)
DB	53,04 (2.088)	38,38 (1.511)	47,04 (1.852)	7,90 (.311)	12,55 (.494)	10,90 (.429)	6,94 (.273)	0,76 (.030)
DC	69,32 (2.729)	54,84 (2.159)	63,50 (2.500)	7,90 (.311)	12,55 (.494)	10,90 (.429)	6,94 (.273)	0,76 (.030)

♦ Connector footprint measured from the front shell.
♦♦ Connector footprint measured from the rear shell.

40 A High Power 90° — Standard Footprint .489♦ or .454 inch♦♦ (Size DD)

Plug

Part Numbers with Metal Bracket and Rivnut #4-40 UNC

Shell Size	Layout	Part Number Without Screw Locks Without Boardlocks	Part Number Without Screw Locks With Boardlocks	Part Number With Screw Locks Without Boardlocks	Part Number With Screw Locks With Boardlocks
DD	24W7	DDMP24H7PJK87	DDMC24H7PJK87	DDMD24H7PJK87	DDMG24H7PJK87
DD	36W4	DDMP36H4PJK87	DDMC36H4PJK87	DDMD36H4PJK87	DDMG36H4PJK87
DD	43W2	DDMP43H2PJK87	DDMC43H2PJK87	DDMD43H2PJK87	DDMG43H2PJK87
DD	47W1	DDMP47H1PJK87	DDMC47H1PJK87	DDMD47H1PJK87	DDMG47H1PJK87

Note: For contacts with 30 microinches gold substitute K127 for K87. Example: DDMP24H7PJK127

Reader's Resource
For contact cavity arrangements, see page 222.
For P.C. hole patterns, see page 246.
For panel cutouts, see page 221.
For alternate bracket configuration (when connectors are supplied without boardlocks), see page 226.

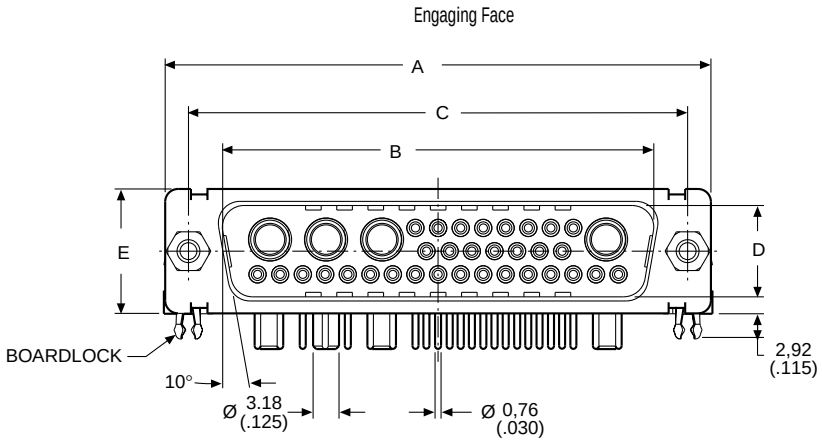

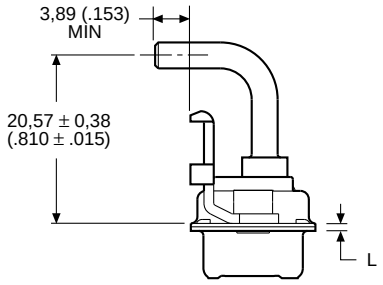

Screw lock, boardlock, and signal contacts removed for clarity

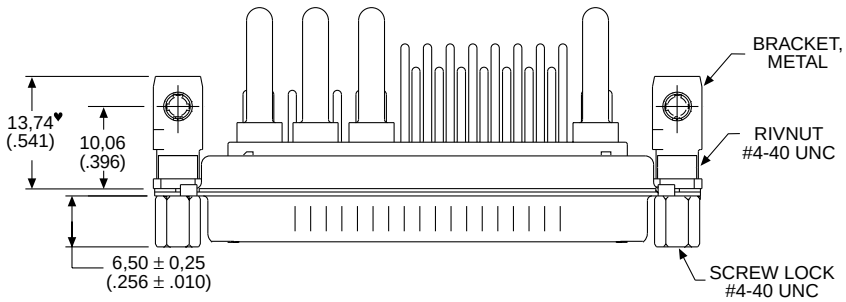

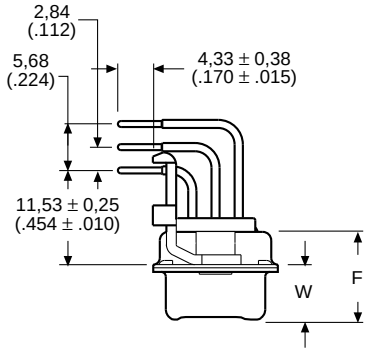

Screw lock, boardlock, and high power contact removed for clarity

Note: ♥ Dimension varies with alternate bracket configuration, see Reader's Resource page 226.

Dimensions

Shell Size	A ±0,38 (.015)	B ±0,13 (.005)	C ±0,13 (.005)	D ±0,13 (.005)	E ±0,38 (.015)	F ±0,25 (.010)	W ±0,41 (.016)	L ±0,25 (.010)
DD	66,93 (2.635)	52,81 (2.079)	61,11 (2.406)	11,07 (.436)	15,37 (.605)	10,82 (.426)	6,84 (.269)	0,99 (.039)

♦ Connector footprint measured from the front shell.
♦♦ Connector footprint measured from the rear shell.

Dimensions are shown in mm (inch)
Dimensions subject to change

40 A High Power 90° — Standard Footprint .489♦ or .454 inch♦♦ (Size DD)

Receptacle

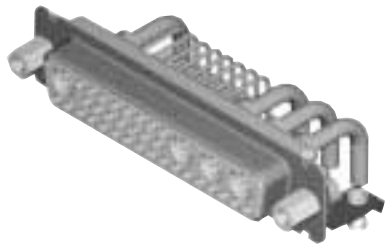

Part Numbers with Metal Bracket and Rivnut #4-40 UNC

Shell Size	Layout	Part Number Without Screw Locks Without Boardlocks	Part Number Without Screw Locks With Boardlocks	Part Number With Screw Locks Without Boardlocks	Part Number With Screw Locks With Boardlocks
DD	24W7	DDMP24H7SJA197	DDMC24H7SJA197	DDMD24H7SJA197	DDMG24H7SJA197
DD	36W4	DDMP36H4SJA197	DDMC36H4SJA197	DDMD36H4SJA197	DDMG36H4SJA197
DD	43W2	DDMP43H2SJA197	DDMC43H2SJA197	DDMD43H2SJA197	DDMG43H2SJA197
DD	47W1	DDMP47H1SJA197	DDMC47H1SJA197	DDMD47H1SJA197	DDMG47H1SJA197

Note: For contacts with 30 microinches gold substitute K126 for A197. Example: DDMP24H7SJK126

Reader's Resource

For contact cavity arrangements, see page 223.
For P.C. hole patterns, see page 249.
For panel cutouts, see page 221.
For alternate bracket configuration (when connectors are supplied without boardlocks), see page 226.

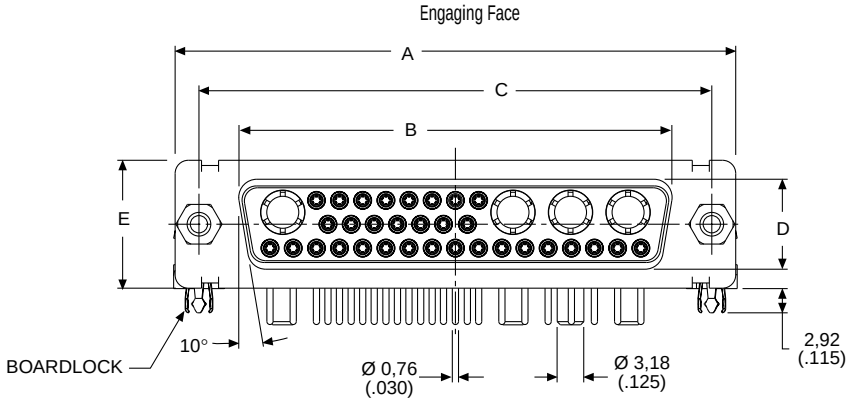

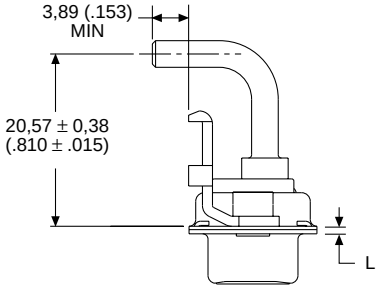

Screw lock, boardlock, and signal contacts removed for clarity

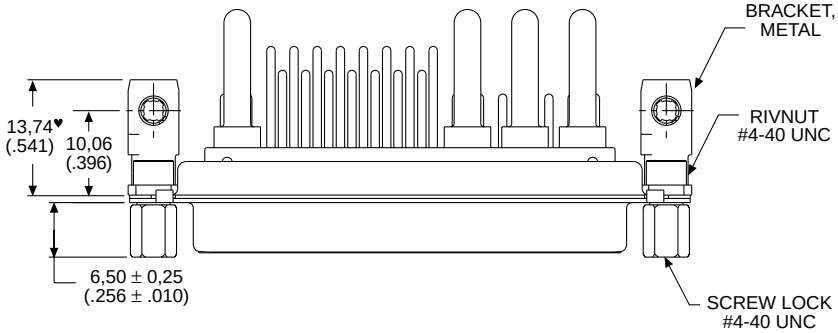

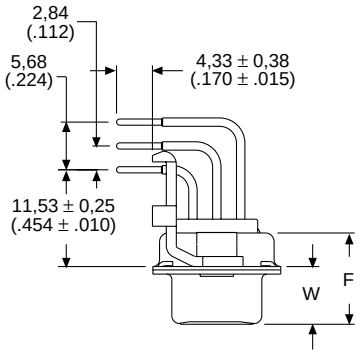

Screw lock, boardlock, and high power contact removed for clarity

Note: ♥ Dimension varies with alternate bracket configuration, see page 226.

Dimensions

Shell Size	A ±0,38 (.015)	B ±0,13 (.005)	C ±0,13 (.005)	D ±0,13 (.005)	E ±0,38 (.015)	F ±0,25 (.010)	W ±0,38 (.015)	L ±0,25 (.010)
DD	66,93 (2.635)	52,42 (2.064)	61,11 (2.406)	10,74 (.423)	15,37 (.605)	10,90 (.429)	6,94 (.273)	0,76 (.030)

♦ Connector footprint measured from the front shell.
♦ ♦ Connector footprint measured from the rear shell.

40 A High Power 90° — European Footprint 10,2♦ or 9,4 mm♦♦ (Sizes DE-DC)

Plug

Reader's Resource
For contact cavity arrangements, see page 222.
For P.C. hole patterns, see pages 250-251.
For panel cutouts, see page 221.
For alternate bracket configuration (when connectors are supplied without boardlocks), see page 226.

Part Numbers with Metal Bracket and Rivnut #4-40 UNC

Shell Size	Layout	Part Number Without Screw Locks Without Boardlocks	Part Number Without Screw Locks With Boardlocks	Part Number With Screw Locks Without Boardlocks	Part Number With Screw Locks With Boardlocks
DE	5W1	DEMP5P1PVK87	DEMC5P1PVK87	DEMD5P1PVK87	DEMG5P1PVK87
DA	7W2	DAMP7P2PVK87	DAMC7P2PVK87	DAMD7P2PVK87	DAMG7P2PVK87
DA	11W1	DAMP11P1PVK87	DAMC11P1PVK87	DAMD11P1PVK87	DAMG11P1PVK87
DA	3W3	DAMP3P3PVK87	DAMC3P3PVK87	DAMD3P3PVK87	DAMG3P3PVK87
DA	3WK3♣	DAMP3PK3PVK87TM	DAMC3PK3PVK87TM	DAMD3PK3PVK87TM	DAMG3PK3PVK87TM
DB	5W5	DBMP5P5PVK87	DBMC5P5PVK87	DBMD5P5PVK87	DBMG5P5PVK87
DB	9W4	DBMP9P4PVK87	DBMC9P4PVK87	DBMD9P4PVK87	DBMG9P4PVK87
DB	13W3	DBMP13P3PVK87	DBMC13P3PVK87	DBMD13P3PVK87	DBMG13P3PVK87
DB	17W2	DBMP17P2PVK87	DBMC17P2PVK87	DBMD17P2PVK87	DBMG17P2PVK87
DB	21W1	DBMP21P1PVK87	DBMC21P1PVK87	DBMD21P1PVK87	DBMG21P1PVK87
DC	8W8	DCMP8P8PVK87	DCMC8P8PVK87	DCMD8P8PVK87	DCMG8P8PVK87
DC	13W6	DCMP13P6PVK87	DCMC13P6PVK87	DCMD13P6PVK87	DCMG13P6PVK87
DC	17W5	DCMP17P5PVK87	DCMC17P5PVK87	DCMD17P5PVK87	DCMG17P5PVK87
DC	21WA4	DCMP21PA4PVK87	DCMC21PA4PVK87	DCMD21PA4PVK87	DCMG21PA4PVK87
DC	25W3	DCMP25P3PVK87	DCMC25P3PVK87	DCMD25P3PVK87	DCMG25P3PVK87
DC	27W2	DCMP27P2PVK87	DCMC27P2PVK87	DCMD27P2PVK87	DCMG27P2PVK87

For M3 threads replace MP with MS, MC with ML, MD with MO, MG with MJ.
Notes: For tin plated PC tails add A226 (signal contacts only). Example DEMP5P1PVK87A226
For performance class 2 substitute K127 for K87. Example: DEMP5P1PVK127
♣ Keyed.

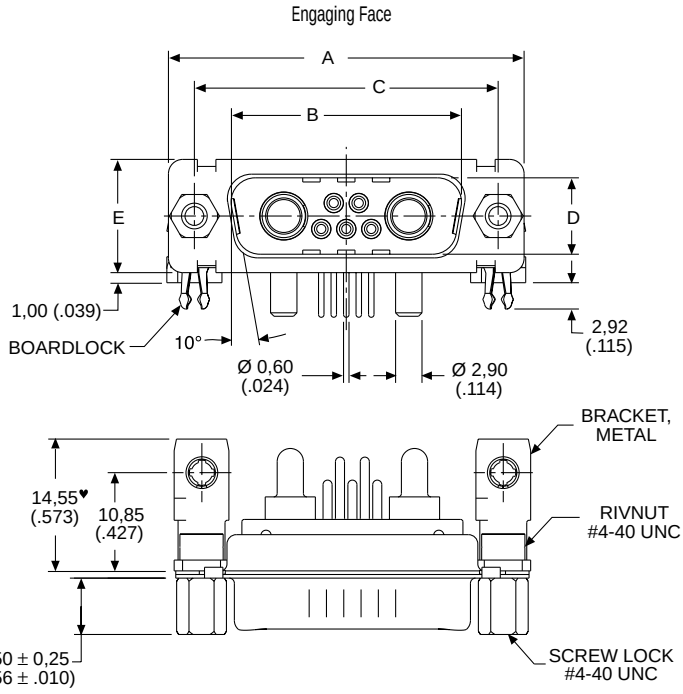

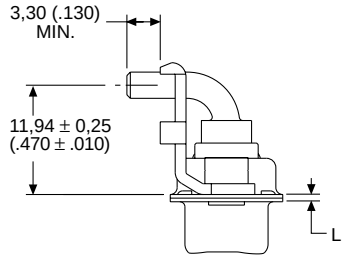

Screw lock, boardlock, and signal contacts removed for clarity

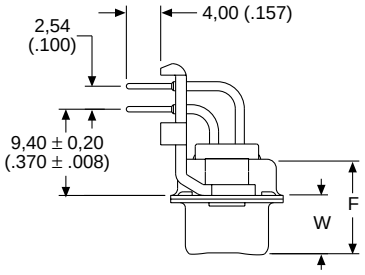

Screw lock, boardlock, and high power contact removed for clarity

Note: ♥ Dimension varies with alternate bracket configuration, see Reader's Resource page 226.

Dimensions

Shell Size	A ±0,38 (.015)	B ±0,13 (.005)	C ±0,13 (.005)	D ±0,13 (.005)	E ±0,38 (.015)	F ±0,25 (.010)	W ±0,368 (.0145)	W ±0,41 (.016)	L ±0,25 (.010)
DE	30,81 (1.213)	16,92 (.666)	24,99 (.984)	8,36 (.329)	12,55 (.494)	10,72 (.422)	6,693 (.2635)	—	0,76 (.030)
DA	39,14 (1.541)	25,25 (.994)	33,32 (1.312)	8,36 (.329)	12,55 (.494)	10,72 (.422)	6,693 (.2635)	—	0,76 (.030)
DB	53,04 (2.088)	38,96 (1.534)	47,04 (1.852)	8,36 (.329)	12,55 (.494)	10,82 (.426)	—	6,84 (.269)	0,99 (.039)
DC	69,32 (2.729)	55,42 (2.182)	63,50 (2.500)	8,36 (.329)	12,55 (.494)	10,82 (.426)	—	6,84 (.269)	0,99 (.039)

♦ Connector footprint measured from the front shell.
♦♦ Connector footprint measured from the rear shell.

Dimensions are shown in mm (inch)
Dimensions subject to change

40 A High Power 90° — European Footprint 10,2♦ or 9,4 mm♦♦ (Sizes DE-DC)

Receptacle

Reader's Resource
For contact cavity arrangements, see page 223.
For P.C. hole patterns, see pages 252-253.
For panel cutouts, see page 221.
For alternate bracket configuration (when connectors are supplied without boardlocks), see page 226.

Part Numbers with Metal Bracket and Rivnut #4-40 UNC

Shell Size	Layout	Part Number Without Screw Locks Without Boardlocks	Part Number Without Screw Locks With Boardlocks	Part Number With Screw Locks Without Boardlocks	Part Number With Screw Locks With Boardlocks
DE	5W1	DEMP5P1SVA197	DEMC5P1SVA197	DEMD5P1SVA197	DEMG5P1SVA197
DA	7W2	DAMP7P2SVA197	DAMC7P2SVA197	DAMD7P2SVA197	DAMG7P2SVA197
DA	11W1	DAMP11P1SVA197	DAMC11P1SVA197	DAMD11P1SVA197	DAMG11P1SVA197
DA	3W3	DAMP3P3SVA197	DAMC3P3SVA197	DAMD3P3SVA197	DAMG3P3SVA197
DA	3WK3♣	DAMP3PK3SVA197TM	DAMC3PK3SVA197TM	DAMD3PK3SVA197TM	DAMG3PK3SVA197TM
DB	5W5	DBMP5P5SVA197	DBMC5P5SVA197	DBMD5P5SVA197	DBMG5P5SVA197
DB	9W4	DBMP9P4SVA197	DBMC9P4SVA197	DBMD9P4SVA197	DBMG9P4SVA197
DB	13W3	DBMP13P3SVA197	DBMC13P3SVA197	DBMD13P3SVA197	DBMG13P3SVA197
DB	17W2	DBMP17P2SVA197	DBMC17P2SVA197	DBMD17P2SVA197	DBMG17P2SVA197
DB	21W1	DBMP21P1SVA197	DBMC21P1SVA197	DBMD21P1SVA197	DBMG21P1SVA197
DC	8W8	DCMP8P8SVA197	DCMC8P8SVA197	DCMD8P8SVA197	DCMG8P8SVA197
DC	13W6	DCMP13P6SVA197	DCMC13P6SVA197	DCMD13P6SVA197	DCMG13P6SVA197
DC	17W5	DCMP17P5SVA197	DCMC17P5SVA197	DCMD17P5SVA197	DCMG17P5SVA197
DC	21WA4	DCMP21PA4SVA197	DCMC21PA4SVA197	DCMD21PA4SVA197	DCMG21PA4SVA197
DC	25W3	DCMP25P3SVA197	DCMC25P3SVA197	DCMD25P3SVA197	DCMG25P3SVA197
DC	27W2	DCMP27P2SVA197	DCMC27P2SVA197	DCMD27P2SVA197	DCMG27P2SVA197

For M3 threads replace MP with MS, MC with ML, MD with MO, MG with MJ.
Notes: For performance class 2 substitute K126 for A197. Example: DEMP5P1SVK126
♣ Keyed.

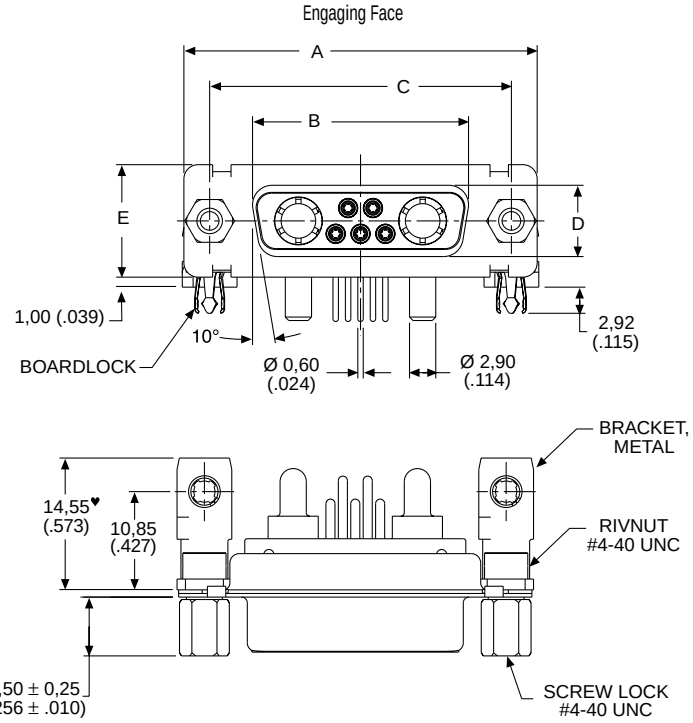

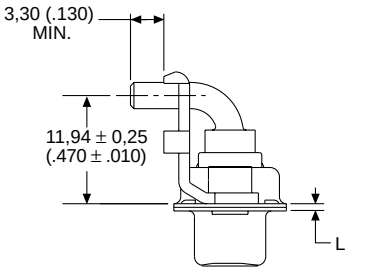

Screw lock, boardlock, and signal contacts removed for clarity

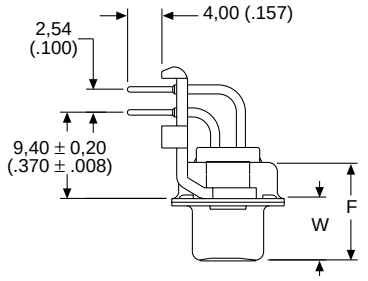

Screw lock, boardlock, and high power contact removed for clarity

Note: ♥ Dimension varies with alternate bracket configuration, see Reader's Resource page 226.

Dimensions

Shell Size	A ±0,38 (.015)	B ±0,13 (.005)	C ±0,13 (.005)	D ±0,13 (.005)	E ±0,38 (.015)	F ±0,25 (.010)	W ±0,38 (.015)	L ±0,25 (.010)
DE	30,81 (1.213)	16,33 (.643)	24,99 (.984)	7,90 (.311)	12,55 (.494)	10,90 (.429)	6,94 (.273)	0.76 (.030)
DA	39,14 (1.541)	24,66 (.971)	33,32 (1.312)	7,90 (.311)	12,55 (.494)	10,90 (.429)	6,94 (.273)	0,76 (.030)
DB	53,04 (2.088)	38,38 (1.511)	47,04 (1.852)	7,90 (.311)	12,55 (.494)	10,90 (.429)	6,94 (.273)	0,76 (.030)
DC	69,32 (2.729)	54,84 (2.159)	63,50 (2.500)	7,90 (.311)	12,55 (.494)	10,90 (.429)	6,94 (.273)	0,76 (.030)

♦ Connector footprint measured from the front shell.
♦♦ Connector footprint measured from the rear shell.

40 A High Power Straight — Standard PC Tails (Sizes DE-DC)

Plug

Reader's Resource
For contact cavity arrangements, see page 222.
For P.C. hole patterns, see pages 254-255.
For panel cutouts, see page 221.

Part Numbers with Standoff #4-40 UNC

Shell Size	Layout	Part Number Without Screw Locks Without Boardlocks	Part Number Without Screw Locks With Boardlocks	Part Number With Screw Locks With Boardlocks
DE	5W1	DEMV5H1PNK87	DEMZ5H1PNK87	DEMN5H1PNK87
DA	7W2	DAMV7H2PNK87	DAMZ7H2PNK87	DAMN7H2PNK87
DA	11W1	DAMV11H1PNK87	DAMZ11H1PNK87	DAMN11H1PNK87
DA	3W3	DAMV3H3PNK87	DAMZ3H3PNK87	DAMN3H3PNK87
DA	3WK3♣	DAMV3HK3PNK87TM	DAMZ3HK3PNK87TM	DAMN3HK3PNK87TM
DB	5W5	DBMV5H5PNK87	DBMZ5H5PNK87	DBMN5H5PNK87
DB	9W4	DBMV9H4PNK87	DBMZ9H4PNK87	DBMN9H4PNK87
DB	13W3	DBMV13H3PNK87	DBMZ13H3PNK87	DBMN13H3PNK87
DB	17W2	DBMV17H2PNK87	DBMZ17H2PNK87	DBMN17H2PNK87
DB	21W1	DBMV21H1PNK87	DBMZ21H1PNK87	DBMN21H1PNK87
DC	8W8	DCMV8H8PNK87	DCMZ8H8PNK87	DCMN8H8PNK87
DC	13W6	DCMV13H6PNK87	DCMZ13H6PNK87	DCMN13H6PNK87
DC	17W5	DCMV17H5PNK87	DCMZ17H5PNK87	DCMN17H5PNK87
DC	21WA4	DCMV21HA4PNK87	DCMZ21HA4PNK87	DCMN21HA4PNK87
DC	25W3	DCMV25H3PNK87	DCMZ25H3PNK87	DCMN25H3PNK87
DC	27W2	DCMV27H2PNK87	DCMZ27H2PNK87	DCMN27H2PNK87

Note: For contacts with 30 microinches gold substitute K127 for K87. Example: DEMV5H1PNK127
For DD shell sizes, see page 68.
♣ Keyed.

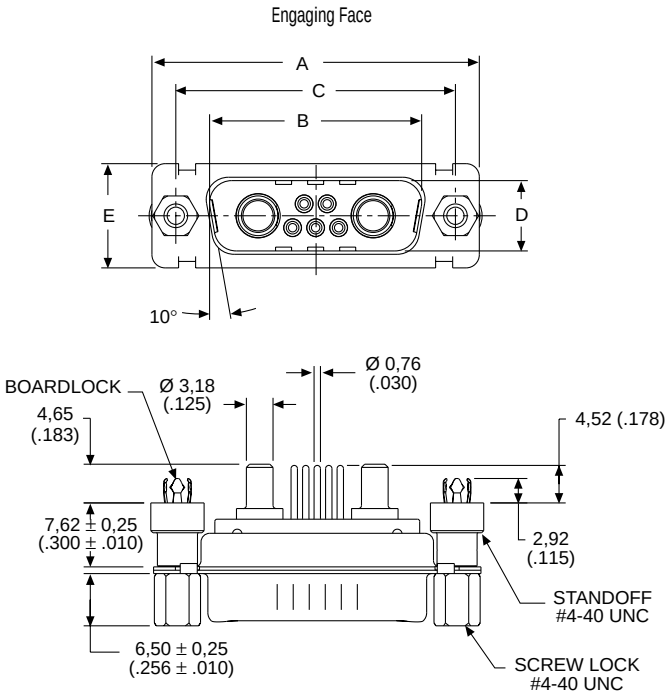

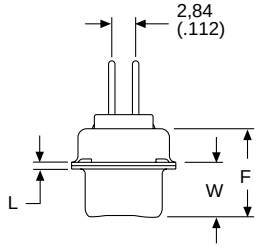

Screw lock, boardlock and high power contact removed for clarity

Dimensions

Shell Size	A ±0,38 (.015)	B ±0,13 (.005)	C ±0,13 (.005)	D ±0,13 (.005)	E ±0,38 (.015)	F ±0,25 (.010)	W ±0,368 (.0145)	W ±0,41 (.016)	L ±0,25 (.010)
DE	30,81 (1.213)	16,92 (.666)	24,99 (.984)	8,36 (.329)	12,55 (.494)	10,72 (.422)	6,693 (.2635)	—	0,76 (.030)
DA	39,14 (1.541)	25,25 (.994)	33,32 (1.312)	8,36 (.329)	12,55 (.494)	10,72 (.422)	6,693 (.2635)	—	0,76 (.030)
DB	53,04 (2.088)	38,96 (1.534)	47,04 (1.852)	8,36 (.329)	12,55 (.494)	10,82 (.426)	—	6,84 (.269)	0,99 (.039)
DC	69,32 (2.729)	55,42 (2.182)	63,50 (2.500)	8,36 (.329)	12,55 (.494)	10,82 (.426)	—	6,84 (.269)	0,99 (.039)

Dimensions are shown in mm (inch)
Dimensions subject to change

40 A High Power Straight — Standard PC Tails (Sizes DE-DC)

Receptacle

Reader's Resource
For contact cavity arrangements, see page 223.
For P.C. hole patterns, see pages 257-258.
For panel cutouts, see page 221.

Part Numbers with Standoff #4-40 UNC

Shell Size	Layout	Part Number Without Screw Locks Without Boardlocks	Part Number Without Screw Locks With Boardlocks	Part Number With Screw Locks With Boardlocks
DE	5W1	DEMV5H1SNA197	DEMZ5H1SNA197	DEMN5H1SNA197
DA	7W2	DAMV7H2SNA197	DAMZ7H2SNA197	DAMN7H2SNA197
DA	11W1	DAMV11H1SNA197	DAMZ11H1SNA197	DAMN11H1SNA197
DA	3W3	DAMV3H3SNA197	DAMZ3H3SNA197	DAMN3H3SNA197
DA	3WK3♣	DAMV3HK3SNA197TM	DAMZ3HK3SNA197TM	DAMN3HK3SNA197TM
DB	5W5	DBMV5H5SNA197	DBMZ5H5SNA197	DBMN5H5SNA197
DB	9W4	DBMV9H4SNA197	DBMZ9H4SNA197	DBMN9H4SNA197
DB	13W3	DBMV13H3SNA197	DBMZ13H3SNA197	DBMN13H3SNA197
DB	17W2	DBMV17H2SNA197	DBMZ17H2SNA197	DBMN17H2SNA197
DB	21W1	DBMV21H1SNA197	DBMZ21H1SNA197	DBMN21H1SNA197
DC	8W8	DCMV8H8SNA197	DCMZ8H8SNA197	DCMN8H8SNA197
DC	13W6	DCMV13H6SNA197	DCMZ13H6SNA197	DCMN13H6SNA197
DC	17W5	DCMV17H5SNA197	DCMZ17H5SNA197	DCMN17H5SNA197
DC	21WA4	DCMV21HA4SNA197	DCMZ21HA4SNA197	DCMN21HA4SNA197
DC	25W3	DCMV25H3SNA197	DCMZ25H3SNA197	DCMN25H3SNA197
DC	27W2	DCMV27H2SNA197	DCMZ27H2SNA197	DCMN27H2SNA197

Note: For contacts with 30 microinches gold substitute K126 for A197. Example: DEMV5H1SNK126
For DD shell sizes, see page 69.
♣ Keyed.

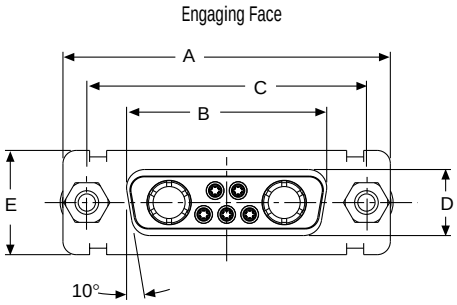

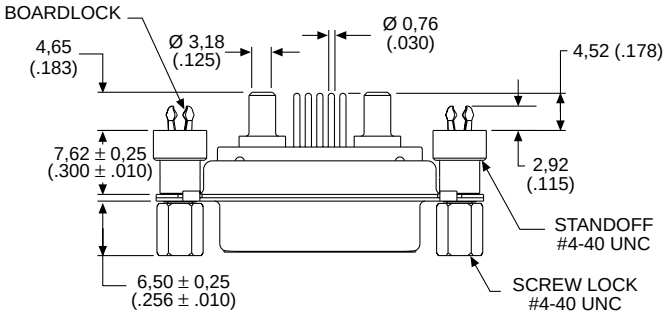

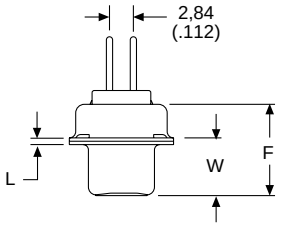

Screw lock, boardlock and high power contact removed for clarity

Dimensions

Shell Size	A ±0,38 (.015)	B ±0,13 (.005)	C ±0,13 (.005)	D ±0,13 (.005)	E ±0,38 (.015)	F ±0,25 (.010)	W ±0,38 (.015)	L ±0,25 (.010)
DE	30,81 (1.213)	16,33 (.643)	24,99 (.984)	7,90 (.311)	12,55 (.494)	10,90 (.429)	6,94 (.273)	0,76 (.030)
DA	39,14 (1.541)	24,66 (.971)	33,32 (1.312)	7,90 (.311)	12,55 (.494)	10,90 (.429)	6,94 (.273)	0,76 (.030)
DB	53,04 (2.088)	38,38 (1.511)	47,04 (1.852)	7,90 (.311)	12,55 (.494)	10,90 (.429)	6,94 (.273)	0,76 (.030)
DC	69,32 (2.729)	54,84 (2.159)	63,50 (2.500)	7,90 (.311)	12,55 (.494)	10,90 (.429)	6,94 (.273)	0,76 (.030)

40 A High Power Straight — Standard PC Tails (Size DD)

Plug

Part Numbers with Standoff #4-40 UNC

Shell Size	Layout	Part Number Without Screw Locks Without Boardlocks	Part Number Without Screw Locks With Boardlocks	Part Number With Screw Locks With Boardlocks
DD	24W7	DDMV24H7PNK87	DDMZ24H7PNK87	DDMN24H7PNK87
DD	36W4	DDMV36H4PNK87	DDMZ36H4PNK87	DDMN36H4PNK87
DD	43W2	DDMV43H2PNK87	DDMZ43H2PNK87	DDMN43H2PNK87
DD	47W1	DDMV47H1PNK87	DDMZ47H1PNK87	DDMN47H1PNK87

Note: For contacts with 30 microinches gold substitute K127 for K87. Example: DDMV24H7PNK127

Reader's Resource
For contact cavity arrangements, see page 222.
For P.C. hole patterns, see page 256.
For panel cutouts, see page 221.

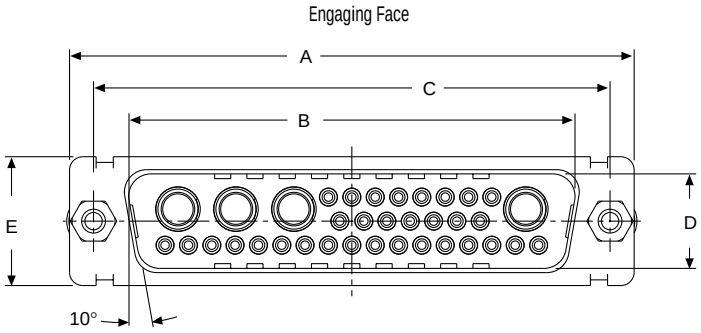

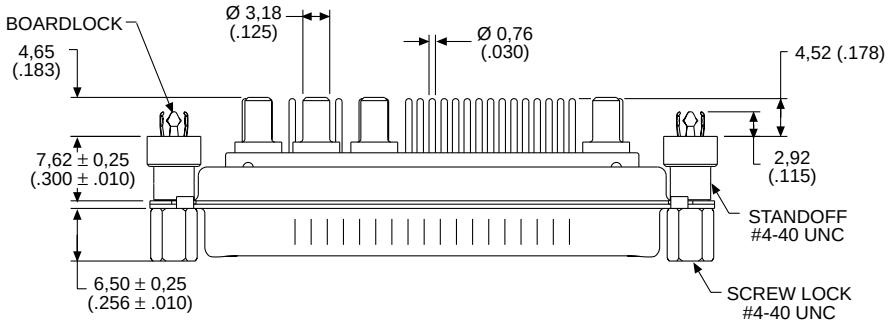

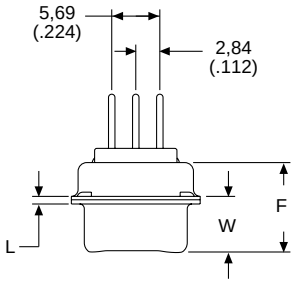

Screw lock, boardlock, and high power contact removed for clarity

Dimensions

Shell Size	A ±0,38 (.015)	B ±0,13 (.005)	C ±0,13 (.005)	D ±0,13 (.005)	E ±0,38 (.015)	F ±0,25 (.010)	W ±0,41 (.016)	L ±0,25 (.010)
DD	66,93 (2.635)	52,81 (2.079)	61,11 (2.406)	11,07 (.436)	15,37 (.605)	10,82 (.426)	6,84 (.269)	0,99 (.039)

Dimensions are shown in mm (inch)
Dimensions subject to change

40 A High Power Straight — Standard PC Tails (Size DD)

Receptacle

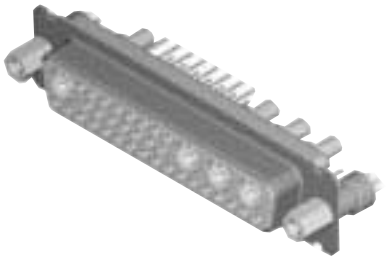

Part Numbers with Standoff #4-40 UNC

Shell Size	Layout	Part Number Without Screw Locks Without Boardlocks	Part Number Without Screw Locks With Boardlocks	Part Number With Screw Locks With Boardlocks
DD	24W7	DDMV24H7SNA197	DDMZ24H7SNA197	DDMN24H7SNA197
DD	36W4	DDMV36H4SNA197	DDMZ36H4SNA197	DDMN36H4SNA197
DD	43W2	DDMV43H2SNA197	DDMZ43H2SNA197	DDMN43H2SNA197
DD	47W1	DDMV47H1SNA197	DDMZ47H1SNA197	DDMN47H1SNA197

Note: For contacts with 30 microinches gold substitute K126 for A197. Example: DDMV24H7SNK126

Reader's Resource
For contact cavity arrangements, see page 223.
For P.C. hole patterns, see page 259.
For panel cutouts, see page 221.

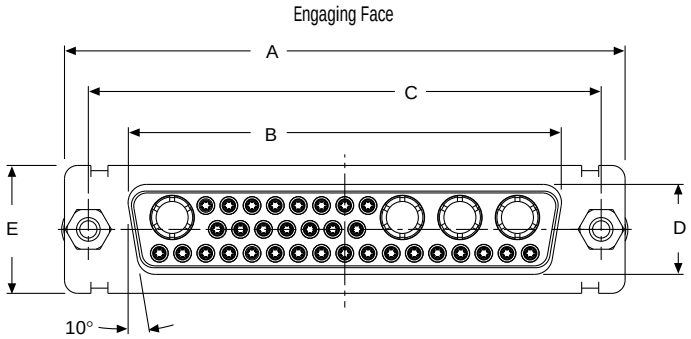

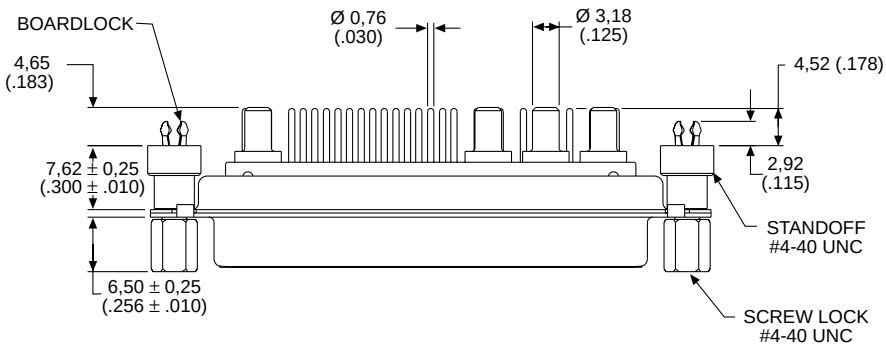

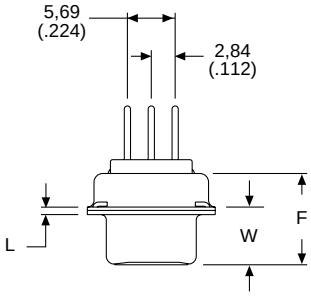

Screw lock, boardlock and high power contact removed for clarity

Dimensions

Shell Size	A ±0,38 (.015)	B ±0,13 (.005)	C ±0,13 (.005)	D ±0,13 (.005)	E ±0,38 (.015)	F ±0,25 (.010)	W ±0,38 (.015)	L ±0,25 (.010)
DD	66,93 (2.635)	52,42 (2.064)	61,11 (2.406)	10,74 (.423)	15,37 (.605)	10,90 (.429)	6,94 (.273)	0,76 (.030)

40 A High Power Straight — European PC Tails (Sizes DE-DC)

Plug

Reader's Resource
For contact cavity arrangements, see page 222.
For P.C. hole patterns, see pages 254-255.
For panel cutouts, see page 221.

Part Numbers with Standoff #4-40 UNC

Shell Size	Layout	Part Number Without Screw Locks Without Boardlocks	Part Number Without Screw Locks With Boardlocks	Part Number With Screw Locks With Boardlocks
DE	5W1	DEMV5H1PYK87	DEMZ5H1PYK87	DEMN5H1PYK87
DA	7W2	DAMV7H2PYK87	DAMZ7H2PYK87	DAMN7H2PYK87
DA	11W1	DAMV11H1PYK87	DAMZ11H1PYK87	DAMN11H1PYK87
DA	3W3	DAMV3H3PYK87	DAMZ3H3PYK87	DAMN3H3PYK87
DA	3WK3♣	DAMV3HK3PYK87TM	DAMZ3HK3PYK87TM	DAMN3HK3PYK87TM
DB	5W5	DBMV5H5PYK87	DBMZ5H5PYK87	DBMN5H5PYK87
DB	9W4	DBMV9H4PYK87	DBMZ9H4PYK87	DBMN9H4PYK87
DB	13W3	DBMV13H3PYK87	DBMZ13H3PYK87	DBMN13H3PYK87
DB	17W2	DBMV17H2PYK87	DBMZ17H2PYK87	DBMN17H2PYK87
DB	21W1	DBMV21H1PYK87	DBMZ21H1PYK87	DBMN21H1PYK87
DC	8W8	DCMV8H8PYK87	DCMZ8H8PYK87	DCMN8H8PYK87
DC	13W6	DCMV13H6PYK87	DCMZ13H6PYK87	DCMN13H6PYK87
DC	17W5	DCMV17H5PYK87	DCMZ17H5PYK87	DCMN17H5PYK87
DC	21WA4	DCMV21HA4PYK87	DCMZ21HA4PYK87	DCMN21HA4PYK87
DC	25W3	DCMV25H3PYK87	DCMZ25H3PYK87	DCMN25H3PYK87
DC	27W2	DCMV27H2PYK87	DCMZ27H2PYK87	DCMN27H2PYK87

For M3 threads replace MV with MT, MZ with MQ, MN with MU.
Notes: For tin plated PC tails add A226 (signal contacts only). Example: DEMV5H1PYK87A226
For performance class 2 substitute K127 for K87. Example: DEMV5H1PYK127
For DD shell sizes, see page 72.
♣ Keyed.

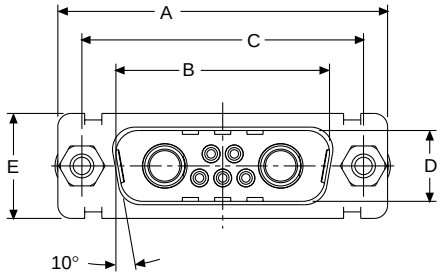

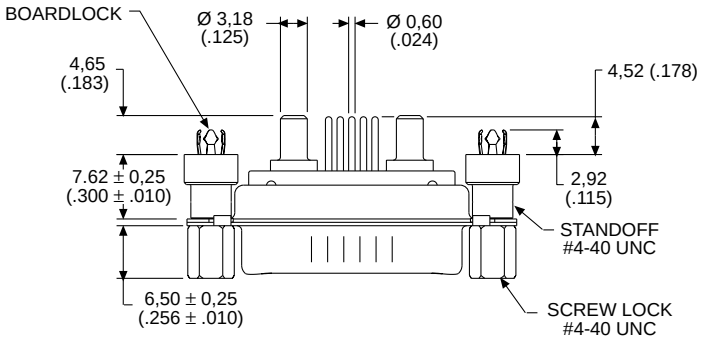

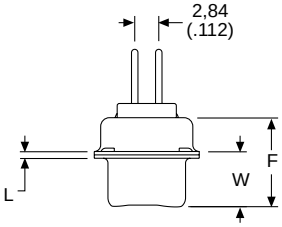

Screw lock, boardlock, and high power contact removed for clarity

Dimensions

Shell Size	A ±0,38 (.015)	B ±0,13 (.005)	C ±0,13 (.005)	D ±0,13 (.005)	E ±0,38 (.015)	F ±0,25 (.010)	W ±0,368 (.0145)	W ±0,41 (.016)	L ±0,25 (.010)
DE	30,81 (1.213)	16,92 (.666)	24,99 (.984)	8,36 (.329)	12,55 (.494)	10,72 (.422)	6,693 (.2635)	—	0,76 (.030)
DA	39,14 (1.541)	25,25 (.994)	33,32 (1.312)	8,36 (.329)	12,55 (.494)	10,72 (.422)	6,693 (.2635)	—	0,76 (.030)
DB	53,04 (2.088)	38,96 (1.534)	47,04 (1.852)	8,36 (.329)	12,55 (.494)	10,82 (.426)	—	6,84 (.269)	0,99 (.039)
DC	69,32 (2.729)	55,42 (2.182)	63,50 (2.500)	8,36 (.329)	12,55 (.494)	10,82 (.426)	—	6,84 (.269)	0,99 (.039)

Dimensions are shown in mm (inch)
Dimensions subject to change

40 A High Power Straight — European PC Tails (Sizes DE-DC)

Receptacle

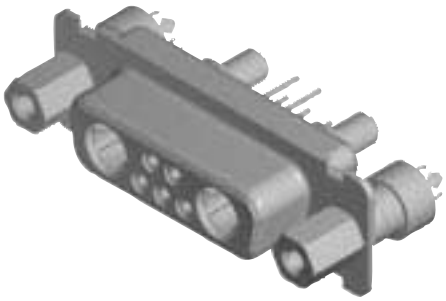

Reader's Resource
For contact cavity arrangements, see page 223.
For P.C. hole patterns, see pages 257-258.
For panel cutouts, see page 221.

Part Numbers with Standoff #4-40 UNC

Shell Size	Layout	Part Number Without Screw Locks Without Boardlocks	Part Number Without Screw Locks With Boardlocks	Part Number With Screw Locks With Boardlocks
DE	5W1	DEMV5H1SYA197	DEMZ5H1SYA197	DEMN5H1SYA197
DA	7W2	DAMV7H2SYA197	DAMZ7H2SYA197	DAMN7H2SYA197
DA	11W1	DAMV11H1SYA197	DAMZ11H1SYA197	DAMN11H1SYA197
DA	3W3	DAMV3H3SYA197	DAMZ3H3SYA197	DAMN3H3SYA197
DA	3WK3♣	DAMV3HK3SYA197TM	DAMZ3HK3SYA197TM	DAMN3HK3SYA197TM
DB	5W5	DBMV5H5SYA197	DBMZ5H5SYA197	DBMN5H5SYA197
DB	9W4	DBMV9H4SYA197	DBMZ9H4SYA197	DBMN9H4SYA197
DB	13W3	DBMV13H3SYA197	DBMZ13H3SYA197	DBMN13H3SYA197
DB	17W2	DBMV17H2SYA197	DBMZ17H2SYA197	DBMN17H2SYA197
DB	21W1	DBMV21H1SYA197	DBMZ21H1SYA197	DBMN21H1SYA197
DC	8W8	DCMV8H8SYA197	DCMZ8H8SYA197	DCMN8H8SYA197
DC	13W6	DCMV13H6SYA197	DCMZ13H6SYA197	DCMN13H6SYA197
DC	17W5	DCMV17H5SYA197	DCMZ17H5SYA197	DCMN17H5SYA197
DC	21WA4	DCMV21HA4SYA197	DCMZ21HA4SYA197	DCMN21HA4SYA197
DC	25W3	DCMV25H3SYA197	DCMZ25H3SYA197	DCMN25H3SYA197
DC	27W2	DCMV27H2SYA197	DCMZ27H2SYA197	DCMN27H2SYA197

For M3 threads replace MV with MT, MZ with MQ, MN with MU.
Notes: For performance class 2 substitute K126 for A197. Example: DEMV5H1SYK126
For DD shell sizes, see page 73.
♣ Keyed.

Engaging Face

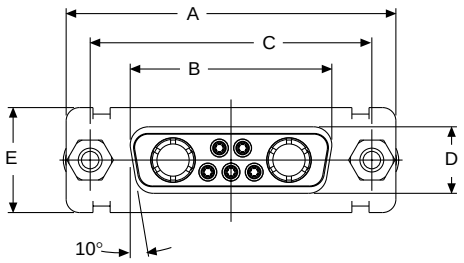

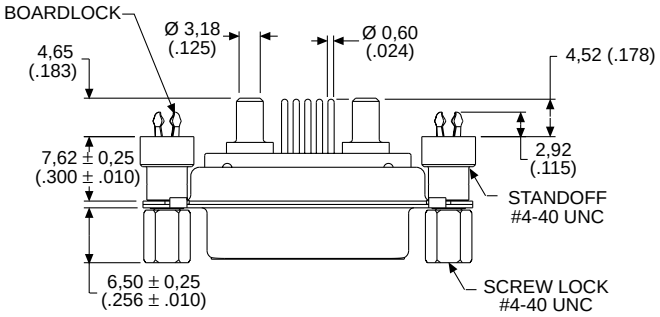

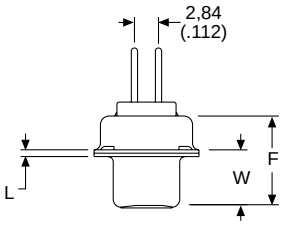

Screw lock, boardlock, and high power contact removed for clarity

Dimensions

Shell Size	A ±0,38 (.015)	B ±0,13 (.005)	C ±0,13 (.005)	D ±0,13 (.005)	E ±0,38 (.015)	F ±0,25 (.010)	W ±0,38 (.015)	L ±0,25 (.010)
DE	30,81 (1.213)	16,33 (.643)	24,99 (.984)	7,90 (.311)	12,55 (.494)	10,90 (.429)	6,94 (.273)	0,76 (.030)
DA	39,14 (1.541)	24,66 (.971)	33,32 (1.312)	7,90 (.311)	12,55 (.494)	10,90 (.429)	6,94 (.273)	0,76 (.030)
DB	53,04 (2.088)	38,38 (1.511)	47,04 (1.852)	7,90 (.311)	12,55 (.494)	10,90 (.429)	6,94 (.273)	0,76 (.030)
DC	69,32 (2.729)	54,84 (2.159)	63,50 (2.500)	7,90 (.311)	12,55 (.494)	10,90 (.429)	6,94 (.273)	0,76 (.030)

40 A High Power Straight — European PC Tails (Size DD)

Plug

Part Numbers with Standoff #4-40 UNC

Shell Size	Layout	Part Number Without Screw Locks Without Boardlocks	Part Number Without Screw Locks With Boardlocks	Part Number With Screw Locks With Boardlocks
DD	24W7	DDMV24H7PYK87	DDMZ24H7PYK87	DDMN24H7PYK87
DD	36W4	DDMV36H4PYK87	DDMZ36H4PYK87	DDMN36H4PYK87
DD	43W2	DDMV43H2PYK87	DDMZ43H2PYK87	DDMN43H2PYK87
DD	47W1	DDMV47H1PYK87	DDMZ47H1PYK87	DDMN47H1PYK87

For M3 threads replace MV with MT, MZ with MQ, MN with MU.
Notes: For tin plated PC tails add A226 (signal contacts only). Example DDMV24H7PYK87A226
For performance class 2 substitute K127 for K87. Example: DDMV24H7PYK127

Reader's Resource
For contact cavity arrangements, see page 222.
For P.C. hole patterns, see page 256.
For panel cutouts, see page 221.

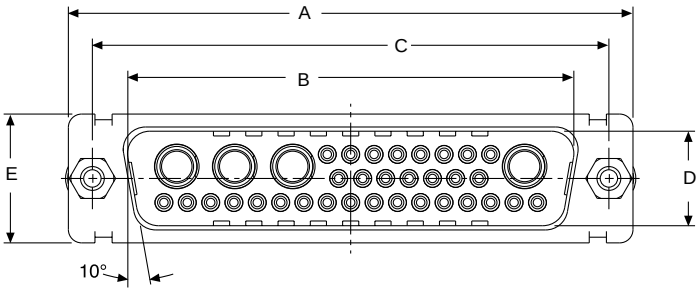

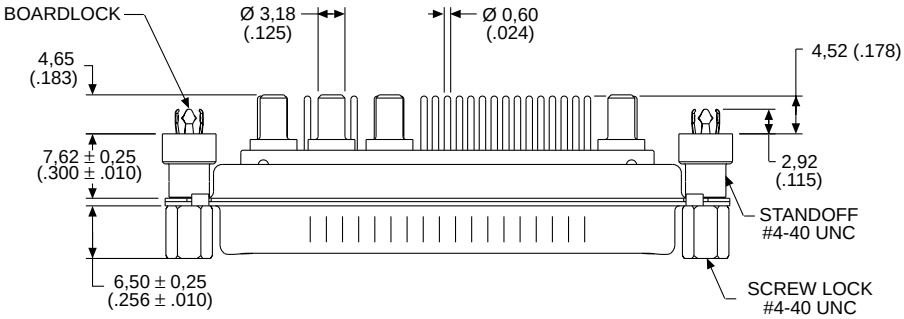

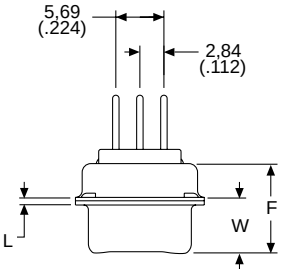

Screw lock, boardlock, and high power contact removed for clarity

Dimensions

Shell Size	A ±0,38 (.015)	B ±0,13 (.005)	C ±0,13 (.005)	D ±0,13 (.005)	E ±0,38 (.015)	F ±0,25 (.010)	W ±0,41 (.016)	L ±0,25 (.010)
DD	66,93 (2.635)	52,81 (2.079)	61,11 (2.406)	11,07 (.436)	15,37 (.605)	10,82 (.426)	6,84 (.269)	0,99 (.039)

Dimensions are shown in mm (inch)
Dimensions subject to change

40 A High Power Straight — European PC Tails (Size DD)

Receptacle

Part Numbers with Standoff #4-40 UNC

Shell Size	Layout	Part Number Without Screw Locks Without Boardlocks	Part Number Without Screw Locks With Boardlocks	Part Number With Screw Locks With Boardlocks
DD	24W7	DDMV24H7SYA197	DDMZ24H7SYA197	DDMN24H7SYA197
DD	36W4	DDMV36H4SYA197	DDMZ36H4SYA197	DDMN36H4SYA197
DD	43W2	DDMV43H2SYA197	DDMZ43H2SYA197	DDMN43H2SYA197
DD	47W1	DDMV47H1SYA197	DDMZ47H1SYA197	DDMN47H1SYA197

For M3 threads replace MV with MT, MZ with MQ, MN with MU.
Note: For performance class 2 substitute K126 for A197. Example: DDMV24H7SYK126

Reader's Resource
For contact cavity arrangements, see page 223.
For P.C. hole patterns, see page 259.
For panel cutouts, see page 221.

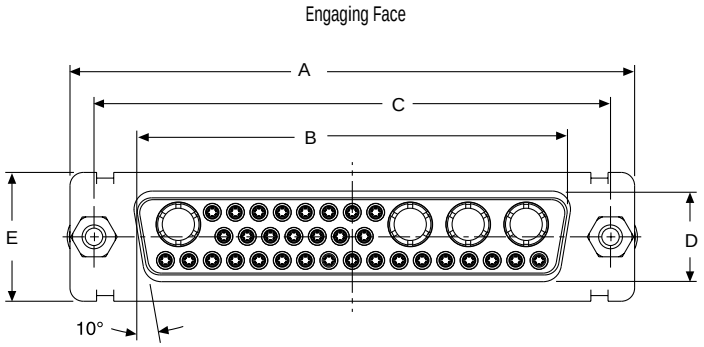

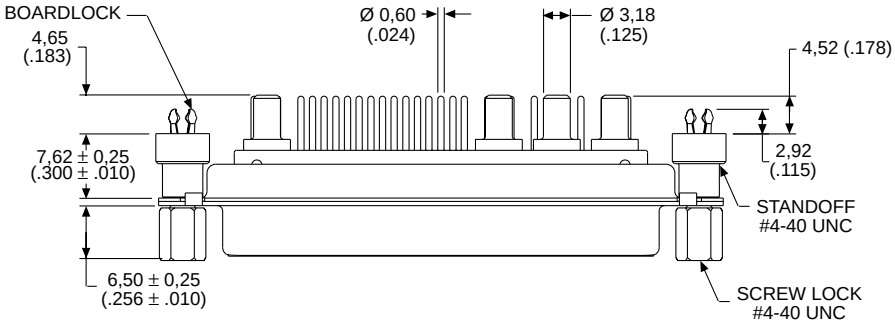

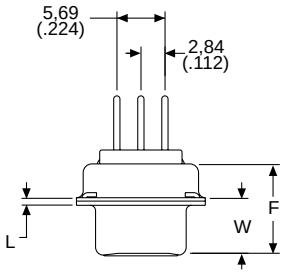

Screw lock, boardlock, and high power contact removed for clarity

Dimensions

Shell Size	A ±0,38 (.015)	B ±0,13 (.005)	C ±0,13 (.005)	D ±0,13 (.005)	E ±0,38 (.015)	F ±0,25 (.010)	W ±0,38 (.015)	L ±0,25 (.010)
DD	66,93 (2.635)	52,42 (2.064)	61,11 (2.406)	10,74 (.423)	15,37 (.605)	10,90 (.429)	6,94 (.273)	0,76 (.030)

90° PC Tail — European Footprint 10,2♦ or 9,4 mm♦♦ (Sizes DE-DD)

Plug

Reader's Resource
For contact cavity arrangements, see page 222.
For P.C. hole patterns, see pages 260-262.
For panel cutouts, see page 221.
For hardware views (European), see page 227.

Part Numbers

Shell Size	Layout	Part Number Without Hardware	Part Number Metal Bracket With #4-40 Nut
DE	5W1	DEM-5W1P-1A0N-K87	DEM-5W1P-1A7N-K87
DA	7W2	DAM-7W2P-1A0N-K87	DAM-7W2P-1A7N-K87
DA	11W1	DAM-11W1P-1A0N-K87	DAM-11W1P-1A7N-K87
DA	3W3	DAM-3W3P-1A0N-K87	DAM-3W3P-1A7N-K87
DA	3WK3♣	DAM-3WK3P-1A0N-K87	DAM-3WK3P-1A7N-K87
DB	5W5	DBM-5W5P-1A0N-K87	DBM-5W5P-1A7N-K87
DB	9W4	DBM-9W4P-1A0N-K87	DBM-9W4P-1A7N-K87
DB	13W3	DBM-13W3P-1A0N-K87	DBM-13W3P-1A7N-K87
DB	17W2	DBM-17W2P-1A0N-K87	DBM-17W2P-1A7N-K87
DB	21W1	DBM-21W1P-1A0N-K87	DBM-21W1P-1A7N-K87
DC	8W8	DCM-8W8P-1A0N-K87	DCM-8W8P-1A7N-K87
DC	13W6	DCM-13W6P-1A0N-K87	DCM-13W6P-1A7N-K87
DC	17W5	DCM-17W5P-1A0N-K87	DCM-17W5P-1A7N-K87
DC	21WA4	DCM-21WA4P-1A0N-K87	DCM-21WA4P-1A7N-K87
DC	25W3	DCM-25W3P-1A0N-K87	DCM-25W3P-1A7N-K87
DC	27W2	DCM-27W2P-1A0N-K87	DCM-27W2P-1A7N-K87
DD	24W7	DDM-24W7P-1A0N-K87	DDM-24W7P-1A7N-K87
DD	36W4	DDM-36W4P-1A0N-K87	DDM-36W4P-1A7N-K87
DD	43W2	DDM-43W2P-1A0N-K87	DDM-43W2P-1A7N-K87
DD	47W1	DDM-47W1P-1A0N-K87	DDM-47W1P-1A7N-K87

Note: Performance class 3 standard, for performance class 2 add -A191. Example: DEM-5W1P-1A0N-A191-K87
♣ Keyed.

Engaging Face

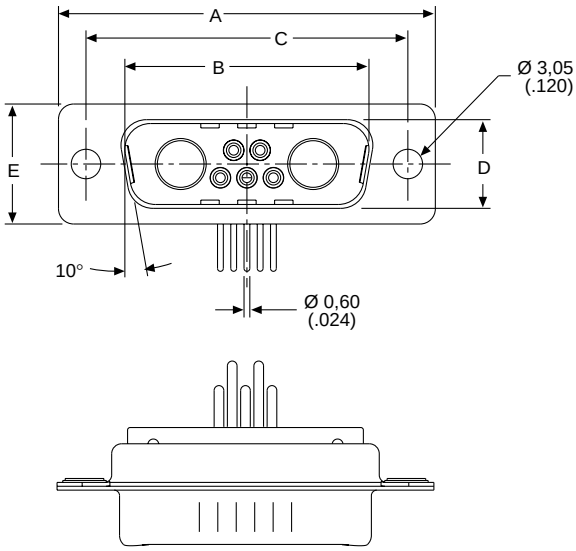

DD Configuration

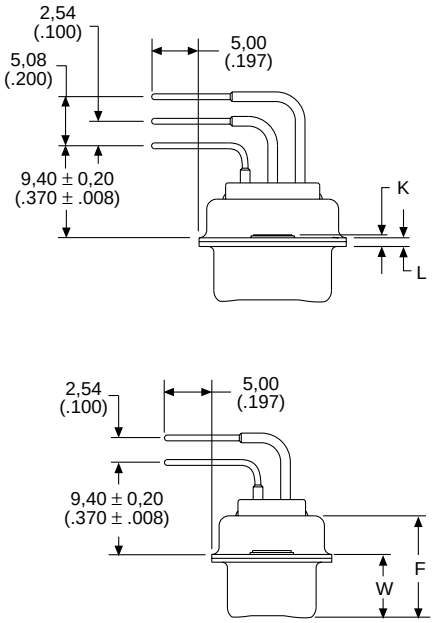

Dimensions

Shell Size	A ±0,38 (.015)	B ±0,13 (.005)	C ±0,13 (.005)	D ±0,13 (.005)	E ±0,38 (.015)	F ±0,25 (.010)	W ±0,368 (.0145)	W ±0,41 (.016)	K ±0,317 (.0125)	K ±0,25 (.010)	L ±0,25 (.010)
DE	30,81 (1.213)	16,92 (.666)	24,99 (.984)	8,36 (.329)	12,55 (.494)	10,72 (.422)	6,693 (.2635)	—	1,206 (.0475)	—	0,76 (.030)
DA	39,14 (1.541)	25,25 (.994)	33,32 (1.312)	8,36 (.329)	12,55 (.494)	10,72 (.422)	6,693 (.2635)	—	1,206 (.0475)	—	0,76 (.030)
DB	53,04 (2.088)	38,96 (1.534)	47,04 (1.852)	8,36 (.329)	12,55 (.494)	10,82 (.426)	—	6,84 (.269)	—	1,52 (.060)	0,99 (.039)
DC	69,32 (2.729)	55,42 (2.182)	63,50 (2.500)	8,36 (.329)	12,55 (.494)	10,82 (.426)	—	6,84 (.269)	—	1,52 (.060)	0,99 (.039)
DD	66,93 (2.635)	52,81 (2.079)	61,11 (2.406)	11,07 (.436)	15,37 (.605)	10,82 (.426)	—	6,84 (.269)	—	1,52 (.060)	0,99 (.039)

♦ Connector footprint measured from the front shell.
♦♦ Connector footprint measured from the rear shell.

Dimensions are shown in mm (inch)
Dimensions subject to change

90° PC Tail — European Footprint 10,2♦ or 9,4 mm♦♦ (Sizes DE-DD)

Receptacle

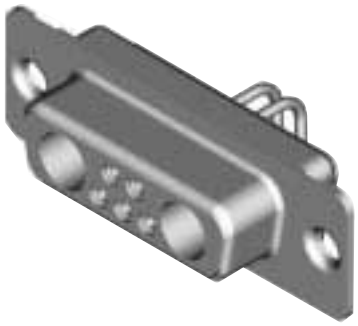

Reader's Resource
For contact cavity arrangements, see page 223.
For P.C. hole patterns, see pages 263-265.
For panel cutouts, see page 221.
For hardware views (European), see page 227.

Part Numbers

Shell Size	Layout	Part Number Without Hardware	Part Number Metal Bracket With #4-40 Nut
DE	5W1	DEM-5W1S-1A0N-A197	DEM-5W1S-1A7N-A197
DA	7W2	DAM-7W2S-1A0N-A197	DAM-7W2S-1A7N-A197
DA	11W1	DAM-11W1S-1A0N-A197	DAM-11W1S-1A7N-A197
DA	3W3	DAM-3W3S-1A0N-A197	DAM-3W3S-1A7N-A197
DA	3WK3♣	DAM-3WK3S-1A0N-A197	DAM-3WK3S-1A7N-A197
DB	5W5	DBM-5W5S-1A0N-A197	DBM-5W5S-1A7N-A197
DB	9W4	DBM-9W4S-1A0N-A197	DBM-9W4S-1A7N-A197
DB	13W3	DBM-13W3S-1A0N-A197	DBM-13W3S-1A7N-A197
DB	17W2	DBM-17W2S-1A0N-A197	DBM-17W2S-1A7N-A197
DB	21W1	DBM-21W1S-1A0N-A197	DBM-21W1S-1A7N-A197
DC	8W8	DCM-8W8S-1A0N-A197	DCM-8W8S-1A7N-A197
DC	13W6	DCM-13W6S-1A0N-A197	DCM-13W6S-1A7N-A197
DC	17W5	DCM-17W5S-1A0N-A197	DCM-17W5S-1A7N-A197
DC	21WA4	DCM-21WA4S-1A0N-A197	DCM-21WA4S-1A7N-A197
DC	25W3	DCM-25W3S-1A0N-A197	DCM-25W3S-1A7N-A197
DC	27W2	DCM-27W2S-1A0N-A197	DCM-27W2S-1A7N-A197
DD	24W7	DDM-24W7S-1A0N-A197	DDM-24W7S-1A7N-A197
DD	36W4	DDM-36W4S-1A0N-A197	DDM-36W4S-1A7N-A197
DD	43W2	DDM-43W2S-1A0N-A197	DDM-43W2S-1A7N-A197
DD	47W1	DDM-47W1S-1A0N-A197	DDM-47W1S-1A7N-A197

Note: Performance class 3 standard, for performance class 2 add -A191. Example: DEM-5W1S-1A0N-A191-A197
♣ Keyed.

Engaging Face

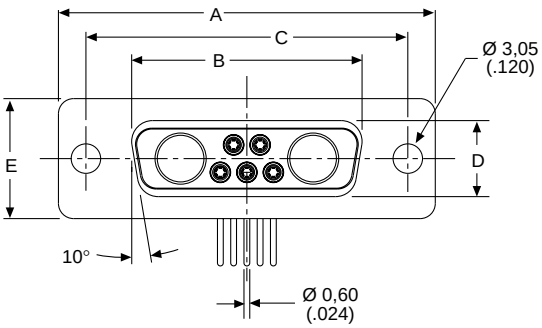

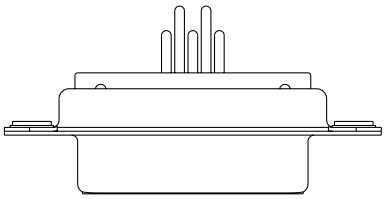

DD Configuration

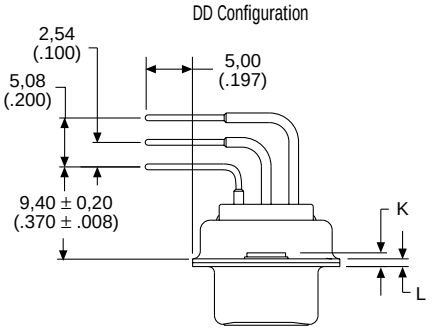

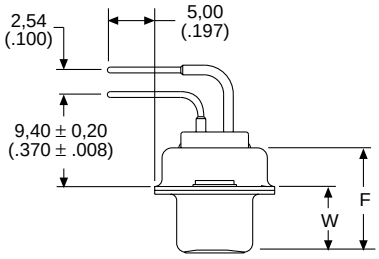

Dimensions

Shell Size	A ±0,38 (.015)	B ±0,13 (.005)	C ±0,13 (.005)	D ±0,13 (.005)	E ±0,38 (.015)	F ±0,25 (.010)	W ±0,38 (.015)	K ±0,318 (.0125)	L ±0,25 (.010)
DE	30,81 (1.213)	16,33 (.643)	24,99 (.984)	7,90 (.311)	12,55 (.494)	10,90 (.429)	6,94 (.273)	1,206 (.0475)	0,76 (.030)
DA	39,14 (1.541)	24,66 (.971)	33,32 (1.312)	7,90 (.311)	12,55 (.494)	10,90 (.429)	6,94 (.273)	1,206 (.0475)	0,76 (.030)
DB	53,04 (2.088)	38,38 (1.511)	47,04 (1.852)	7,90 (.311)	12,55 (.494)	10,90 (.429)	6,94 (.273)	1,206 (.0475)	0,76 (.030)
DC	69,32 (2.729)	54,84 (2.159)	63,50 (2.500)	7,90 (.311)	12,55 (.494)	10,90 (.429)	6,94 (.273)	1,206 (.0475)	0,76 (.030)
DD	66,93 (2.635)	52,42 (2.064)	61,11 (2.406)	10,74 (.423)	15,37 (.605)	10,90 (.429)	6,94 (.273)	1,206 (.0475)	0,76 (.030)

♦ Connector footprint measured from the front shell.
♦ ♦ Connector footprint measured from the rear shell.

Straight PC Tails — European (Sizes DE-DD)

Plug

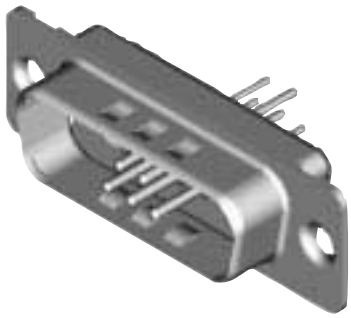

Reader's Resource
For contact cavity arrangements, see page 222.
For P.C. hole patterns, see pages 266-268.
For panel cutouts, see page 221.
For hardware views (European), see page 227.

Part Numbers

Shell Size	Layout	Part Number X 4,60 (.181)	Part Number X 6,05 (.238)
DE	5W1	DEM-5W1P-OL2-K87	DEM-5W1P-OL4-K87
DA	7W2	DAM-7W2P-OL2-K87	DAM-7W2P-OL4-K87
DA	11W1	DAM-11W1P-OL2-K87	DAM-11W1P-OL4-K87
DA	3W3	DAM-3W3P-OL2-K87	DAM-3W3P-OL4-K87
DA	3WK3♣	DAM-3WK3P-OL2-K87	DAM-3WK3P-OL4-K87
DB	5W5	DBM-5W5P-OL2-K87	DBM-5W5P-OL4-K87
DB	9W4	DBM-9W4P-OL2-K87	DBM-9W4P-OL4-K87
DB	13W3	DBM-13W3P-OL2-K87	DBM-13W3P-OL4-K87
DB	17W2	DBM-17W2P-OL2-K87	DBM-17W2P-OL4-K87
DB	21W1	DBM-21W1P-OL2-K87	DBM-21W1P-OL4-K87
DC	8W8	DCM-8W8P-OL2-K87	DCM-8W8P-OL4-K87
DC	13W6	DCM-13W6P-OL2-K87	DCM-13W6P-OL4-K87
DC	17W5	DCM-17W5P-OL2-K87	DCM-17W5P-OL4-K87
DC	21WA4	DCM-21WA4P-OL2-K87	DCM-21WA4P-OL4-K87
DC	25W3	DCM-25W3P-OL2-K87	DCM-25W3P-OL4-K87
DC	27W2	DCM-27W2P-OL2-K87	DCM-27W2P-OL4-K87
DD	24W7	DDM-24W7P-OL2-K87	DDM-24W7P-OL4-K87
DD	36W4	DDM-36W4P-OL2-K87	DDM-36W4P-OL4-K87
DD	43W2	DDM-43W2P-OL2-K87	DDM-43W2P-OL4-K87
DD	47W1	DDM-47W1P-OL2-K87	DDM-47W1P-OL4-K87

Note: Performance class 3 standard, for performance class 2 add -A191. Example: DEM-5W1P-OL2-A191-K87
♣ Keyed.

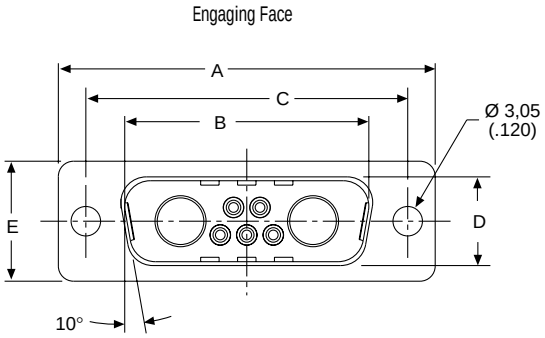

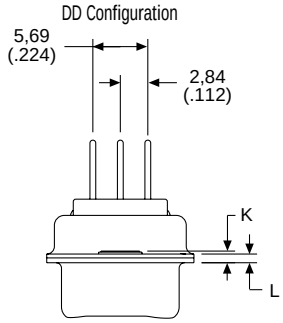

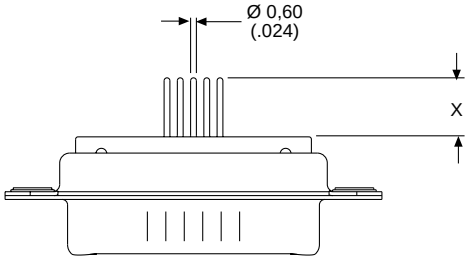

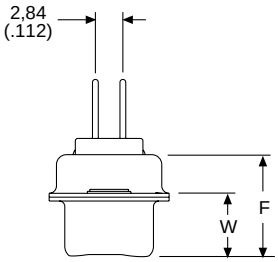

Dimensions

Shell Size	A ±0,38 (.015)	B ±0,13 (.005)	C ±0,13 (.005)	D ±0,13 (.005)	E ±0,38 (.015)	F ±0,25 (.010)	W ±0,368 (.0145)	W ±0,41 (.016)	K ±0,317 (.0125)	K ±0,25 (.010)	L ±0,25 (.010)
DE	30,81 (1.213)	16,92 (.666)	24,99 (.984)	8,36 (.329)	12,55 (.494)	10,72 (.422)	6,693 (.2635)	—	1,206 (.0475)	—	0,76 (.030)
DA	39,14 (1.541)	25,25 (.994)	33,32 (1.312)	8,36 (.329)	12,55 (.494)	10,72 (.422)	6,693 (.2635)	—	1,206 (.0475)	—	0,76 (.030)
DB	53,04 (2.088)	38,96 (1.534)	47,04 (1.852)	8,36 (.329)	12,55 (.494)	10,82 (.426)	—	6,84 (.269)	—	1,52 (.060)	0,99 (.039)
DC	69,32 (2.729)	55,42 (2.182)	63,50 (2.500)	8,36 (.329)	12,55 (.494)	10,82 (.426)	—	6,84 (.269)	—	1,52 (.060)	0,99 (.039)
DD	66,93 (2.635)	52,81 (2.079)	61,11 (2.406)	11,07 (.436)	15,37 (.605)	10,82 (.426)	—	6,84 (.269)	—	1,52 (.060)	0,99 (.039)

Dimensions are shown in mm (inch)
Dimensions subject to change

Straight PC Tails — European (Sizes DE-DD)

Receptacle

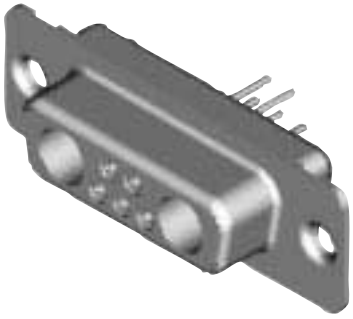

Reader's Resource

For contact cavity arrangements, see page 223.
For P.C. hole patterns, see pages 269-271.
For panel cutouts, see page 221.
For hardware views (European), see page 227.

Part Numbers

Shell Size	Layout	Part Number X 4.60 (.181)	Part Number X 6.05 (.238)
DE	5W1	DEM-5W1S-OL2-A197	DEM-5W1S-OL4-A197
DA	7W2	DAM-7W2S-OL2-A197	DAM-7W2S-OL4-A197
DA	11W1	DAM-11W1S-OL2-A197	DAM-11W1S-OL4-A197
DA	3W3	DAM-3W3S-OL2-A197	DAM-3W3S-OL4-A197
DA	3WK3♣	DAM-3WK3S-OL2-A197	DAM-3WK3S-OL4-A197
DB	5W5	DBM-5W5S-OL2-A197	DBM-5W5S-OL4-A197
DB	9W4	DBM-9W4S-OL2-A197	DBM-9W4S-OL4-A197
DB	13W3	DBM-13W3S-OL2-A197	DBM-13W3S-OL4-A197
DB	17W2	DBM-17W2S-OL2-A197	DBM-17W2S-OL4-A197
DB	21W1	DBM-21W1S-OL2-A197	DBM-21W1S-OL4-A197
DC	8W8	DCM-8W8S-OL2-A197	DCM-8W8S-OL4-A197
DC	13W6	DCM-13W6S-OL2-A197	DCM-13W6S-OL4-A197
DC	17W5	DCM-17W5S-OL2-A197	DCM-17W5S-OL4-A197
DC	21WA4	DCM-21WA4S-OL2-A197	DCM-21WA4S-OL4-A197
DC	25W3	DCM-25W3S-OL2-A197	DCM-25W3S-OL4-A197
DC	27W2	DCM-27W2S-OL2-A197	DCM-27W2S-OL4-A197
DD	24W7	DDM-24W7S-OL2-A197	DDM-24W7S-OL4-A197
DD	36W4	DDM-36W4S-OL2-A197	DDM-36W4S-OL4-A197
DD	43W2	DDM-43W2S-OL2-A197	DDM-43W2S-OL4-A197
DD	47W1	DDM-47W1S-OL2-A197	DDM-47W1S-OL4-A197

Note: Performance class 3 standard, for performance class 2 add -A191. Example: DEM-5W1S-OL2-A191-A197
♣ Keyed.

Engaging Face

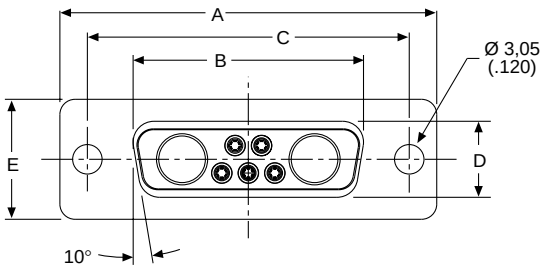

DD Configuration

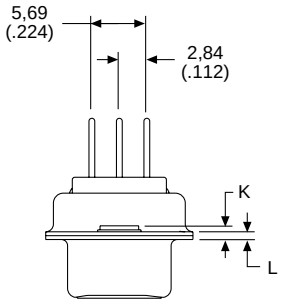

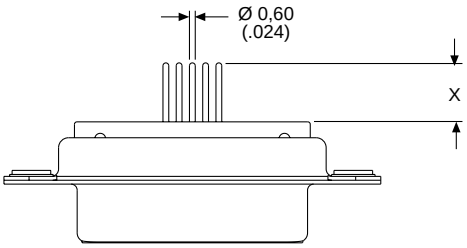

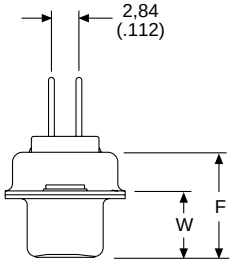

Dimensions

Shell Size	A ±0,38 (.015)	B ±0,13 (.005)	C ±0,13 (.005)	D ±0,13 (.005)	E ±0,38 (.015)	F ±0,25 (.010)	W ±0,38 (.015)	K ±0,318 (.0125)	L ±0,25 (.010)
DE	30,81 (1.213)	16,33 (.643)	24,99 (.984)	7,90 (.311)	12,55 (.494)	10,90 (.429)	6,94 (.273)	1,206 (.0475)	0,76 (.030)
DA	39,14 (1.541)	24,66 (.971)	33,32 (1.312)	7,90 (.311)	12,55 (.494)	10,90 (.429)	6,94 (.273)	1,206 (.0475)	0,76 (.030)
DB	53,04 (2.088)	38,38 (1.511)	47,04 (1.852)	7,90 (.311)	12,55 (.494)	10,90 (.429)	6,94 (.273)	1,206 (.0475)	0,76 (.030)
DC	69,32 (2.729)	54,84 (2.159)	63,50 (2.500)	7,90 (.311)	12,55 (.494)	10,90 (.429)	6,94 (.273)	1,206 (.0475)	0,76 (.030)
DD	66,93 (2.635)	52,42 (2.064)	61,11 (2.406)	10,74 (.423)	15,37 (.605)	10,90 (.429)	6,94 (.273)	1,206 (.0475)	0,76 (.030)

Solder Cup (Sizes DE-DD)

Plug

Reader's Resource

For contact cavity arrangements, see page 222.
For panel cutouts, see page 221.
For hardware views (Standard), see page 226.

Part Numbers

Shell Size	Layout	Through Hole	Dual Float Mount	Clinch Nut #4-40 UNC
DE	5W1	DEM5W1PK87	DEMY5W1PK87	DEME5W1PK87
DA	7W2	DAM7W2PK87	DAMY7W2PK87	DAME7W2PK87
DA	11W1	DAM11W1PK87	DAMY11W1PK87	DAME11W1PK87
DA	3W3	DAM3W3PK87	DAMY3W3PK87	DAME3W3PK87
DA	3WK3♣	DAM3WK3PK87	DAMY3WK3PK87	DAME3WK3PK87
DB	5W5	DBMP5W5PK87	DBMY5W5PK87	DBME5W5PK87
DB	9W4	DBM9W4PK87	DBMY9W4PK87	DBME9W4PK87
DB	13W3	DBM13W3PK87	DBMY13W3PK87	DBME13W3PK87
DB	17W2	DBM17W2PK87	DBMY17W2PK87	DBME17W2PK87
DB	21W1	DBM21W1PK87	DBMY21W1PK87	DBME21W1PK87
DC	8W8	DCM8W8PK87	DCMY8W8PK87	DCME8W8PK87
DC	13W6	DCM13W6PK87	DCMY13W6PK87	DCME13W6PK87
DC	17W5	DCM17W5PK87	DCMY17W5PK87	DCME17W5PK87
DC	21WA4	DCM21WA4PK87	DCMY21WA4PK87	DCME21WA4PK87
DC	25W3	DCM25W3PK87	DCMY25W3PK87	DCME25W3PK87
DC	27W2	DCM27W2PK87	DCMY27W2PK87	DCME27W2PK87
DD	24W7	DDM24W7PK87	DDMY24W7PK87	DDME24W7PK87
DD	36W4	DDM36W4PK87	DDMY36W4PK87	DDME36W4PK87
DD	43W2	DDM43W2PK87	DDMY43W2PK87	DDME43W2PK87
DD	47W1	DDM47W1PK87	DDMY47W1PK87	DDME47W1PK87

For contacts with 30 microinches gold substitute K127 for K87. Example: DEM5W1PK127
For M3 clinch nuts substitute X for E. Example: DEMX5W1PK87
♣ Keyed.

Engaging Face

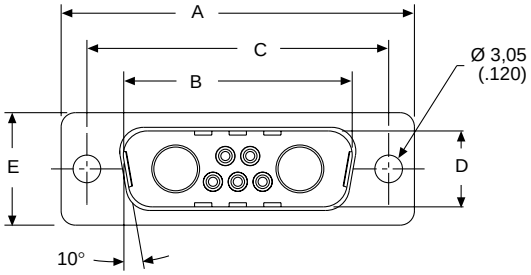

DD Configuration

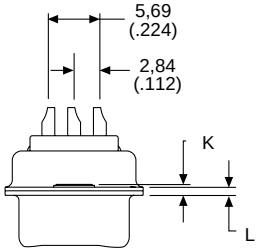

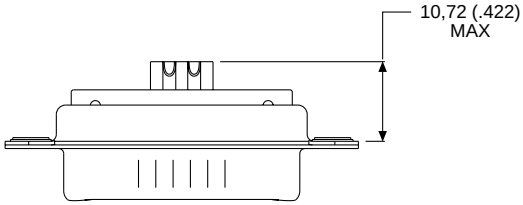

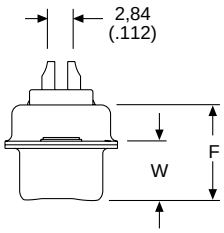

Dimensions

Shell Size	A ±0,38 (.015)	B ±0,13 (.005)	C ±0,13 (.005)	D ±0,13 (.005)	E ±0,38 (.015)	F ±0,25 (.010)	W ±0,368 (.0145)	W ±0,41 (.016)	K ±0,317 (.0125)	K ±0,25 (.010)	L ±0,25 (.010)
DE	30,81 (1.213)	16,92 (.666)	24,99 (.984)	8,36 (.329)	12,55 (.494)	10,72 (.422)	6,693 (.2635)	—	1,206 (.0475)	—	0,76 (.030)
DA	39,14 (1.541)	25,25 (.994)	33,32 (1.312)	8,36 (.329)	12,55 (.494)	10,72 (.422)	6,693 (.2635)	—	1,206 (.0475)	—	0,76 (.030)
DB	53,04 (2.088)	38,96 (1.534)	47,04 (1.852)	8,36 (.329)	12,55 (.494)	10,82 (.426)	—	6,84 (.269)	—	1,52 (.060)	0,99 (.039)
DC	69,32 (2.729)	55,42 (2.182)	63,50 (2.500)	8,36 (.329)	12,55 (.494)	10,82 (.426)	—	6,84 (.269)	—	1,52 (.060)	0,99 (.039)
DD	66,93 (2.635)	52,81 (2.079)	61,11 (2.406)	11,07 (.436)	15,37 (.605)	10,82 (.426)	—	6,84 (.269)	—	1,52 (.060)	0,99 (.039)

Dimensions are shown in mm (inch)
Dimensions subject to change

Solder Cup (Sizes DE-DD)

Receptacle

Reader's Resource

For contact cavity arrangements, see page 223.
For panel cutouts, see page 221.
For hardware views (Standard), see page 226.

Part Numbers

Shell Size	Layout	Through Hole	Dual Float Mount	Clinch Nut #4-40 UNC
DE	5W1	DEM5W1SA197	DEMY5W1SA197	DEME5W1SA197
DA	7W2	DAM7W2SA197	DAMY7W2SA197	DAME7W2SA197
DA	11W1	DAM11W1SA197	DAMY11W1SA197	DAME11W1SA197
DA	3W3	DAM3W3SA197	DAMY3W3SA197	DAME3W3SA197
DA	3WK3♣	DAM3WK3SA197	DAMY3WK3SA197	DAME3WK3SA197
DB	5W5	DBM5W5SA197	DBMY5W5SA197	DBME5W5SA197
DB	9W4	DBM9W4SA197	DBMY9W4SA197	DBME9W4SA197
DB	13W3	DBM13W3SA197	DBMY13W3SA197	DBME13W3SA197
DB	17W2	DBM17W2SA197	DBMY17W2SA197	DBME17W2SA197
DB	21W1	DBM21W1SA197	DBMY21W1SA197	DBME21W1SA197
DC	8W8	DCM8W8SA197	DCMY8W8SA197	DCME8W8SA197
DC	13W6	DCM13W6SA197	DCMY13W6SA197	DCME13W6SA197
DC	17W5	DCM17W5SA197	DCMY17W5SA197	DCME17W5SA197
DC	21WA4	DCM21WA4SA197	DCMY21WA4SA197	DCME21WA4SA197
DC	25W3	DCM25W3SA197	DCMY25W3SA197	DCME25W3SA197
DC	27W2	DCM27W2SA197	DCMY27W2SA197	DCME27W2SA197
DD	24W7	DDM24W7SA197	DDMY24W7SA197	DDME24W7SA197
DD	36W4	DDM36W4SA197	DDMY36W4SA197	DDME36W4SA197
DD	43W2	DDM43W2SA197	DDMY43W2SA197	DDME43W2SA197
DD	47W1	DDM47W1SA197	DDMY47W1SA197	DDME47W1SA197

For contacts with 30 microinches gold substitute K126 for A197. Example: DEM5W1SK126
For M3 clinch nuts substitute X for E. Example: DEMX5W1SA197
♣ Keyed.

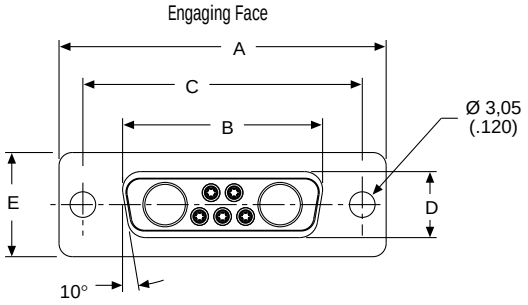

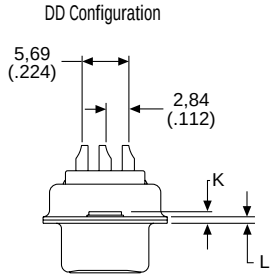

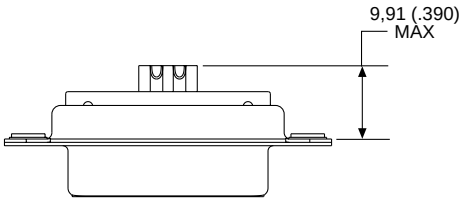

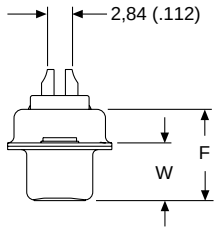

Dimensions

Shell Size	A ±0,38 (.015)	B ±0,13 (.005)	C ±0,13 (.005)	D ±0,13 (.005)	E ±0,38 (.015)	F ±0,25 (.010)	W ±0,38 (.015)	K ±0,318 (.0125)	L ±0,25 (.010)
DE	30,81 (1.123)	16,33 (.643)	24,99 (.984)	7,90 (.311)	12,55 (.494)	10,90 (.429)	6,94 (.273)	1,206 (.0475)	0,76 (.030)
DA	39,14 (1.541)	24,66 (.971)	33,32 (1.312)	7,90 (.311)	12,55 (.494)	10,90 (.429)	6,94 (.273)	1,206 (.0475)	0,76 (.030)
DB	53,04 (2.088)	38,38 (1.511)	47,04 (1.852)	7,90 (.311)	12,55 (.494)	10,90 (.429)	6,94 (.273)	1,206 (.0475)	0,76 (.030)
DC	69,32 (2.729)	54,84 (2.159)	63,50 (2.500)	7,90 (.311)	12,55 (.494)	10,90 (.429)	6,94 (.273)	1,206 (.0475)	0,76 (.030)
DD	66,93 (2.635)	52,42 (2.064)	61,11 (2.406)	10,74 (.423)	15,37 (.605)	10,90 (.429)	6,94 (.273)	1,206 (.0475)	0,76 (.030)

Crimp Cable Connectors without Contacts (Sizes DA-DD)

Plug

Reader's Resource
For contact cavity arrangements, see page 222.
For panel cutouts, see page 221.

Part Numbers

Shell Size	Layout	Part Number
DA	7W2	DAA7W2PK87F0
DA	11W1	DAA11W1PK87F0
DA	3W3	DAA3W3PK87F0
DB	5W5	DBA5W5PK87F0
DB	9W4	DBA9W4PK87F0
DB	13W3	DBA13W3PK87F0
DB	17W2	DBA17W2PK87F0
DB	21W1	DBA21W1PK87F0
DC	8W8	DCA8W8PK87F0
DC	21WA4	DCA21WA4PK87F0
DC	25W3	DCA25W3PK87F0
DD	24W7	DDA24W7PK87F0
DD	36W4	DDA36W4PK87F0

Note: For crimp (Size 20) contacts and tooling, see pages 83 & 275.

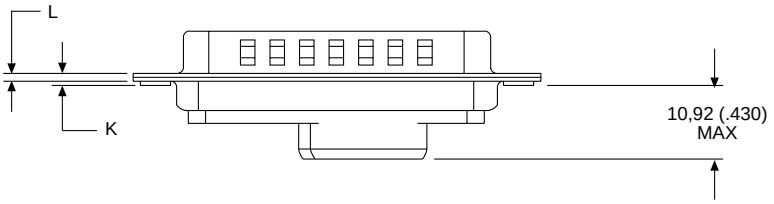

Engaging Face

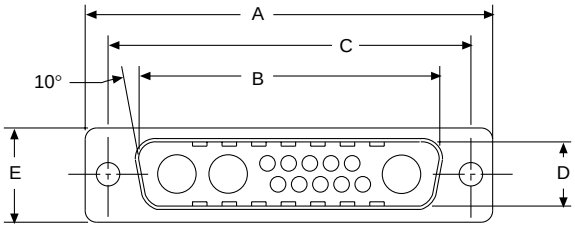

Dimensions

Shell Size	A ±0,38 (.015)	B ±0,13 (.005)	C ±0,13 (.005)	D ±0,13 (.005)	E ±0,38 (.015)	F ±0,25 (.010)	W ±0,368 (.0145)	W ±0,41 (.016)	K ±0,317 (.0125)	K ±0,25 (.010)	L ±0,25 (.010)
DE	30,81 (1.213)	16,92 (.666)	24,99 (.984)	8,36 (.329)	12,55 (.494)	10,72 (.422)	6,693 (.2635)	—	1,206 (.0475)	—	0,76 (.030)
DA	39,14 (1.541)	25,25 (.994)	33,32 (1.312)	8,36 (.329)	12,55 (.494)	10,72 (.422)	6,693 (.2635)	—	1,206 (.0475)	—	0,76 (.030)
DB	53,04 (2.088)	38,96 (1.534)	47,04 (1.852)	8,36 (.329)	12,55 (.494)	10,82 (.426)	—	6,84 (.269)	—	1,52 (.060)	0,99 (.039)
DC	69,32 (2.729)	55,42 (2.182)	63,50 (2.500)	8,36 (.329)	12,55 (.494)	10,82 (.426)	—	6,84 (.269)	—	1,52 (.060)	0,99 (.039)
DD	66,93 (2.635)	52,81 (2.079)	61,11 (2.406)	11,07 (.436)	15,37 (.605)	10,82 (.426)	—	6,84 (.269)	—	1,52 (.060)	0,99 (.039)

Dimensions are shown in mm (inch)
Dimensions subject to change

Crimp Cable Connectors without Contacts (Sizes DA-DD)

Receptacle

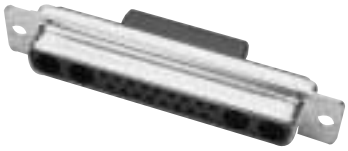

Reader's Resource
For contact cavity arrangements, see page 223.
For panel cutouts, see page 221.

Part Numbers

Shell Size	Layout	Part Number
DA	7W2	DAA7W2SA197F0
DA	11W1	DAA11W1SA197F0
DA	3W3	DAA3W3SA197F0
DB	5W5	DBA5W5SA197F0
DB	9W4	DBA9W4SA197F0
DB	13W3	DBA13W3SA197F0
DB	17W2	DBA17W2SA197F0
DB	21W1	DBA21W1SA197F0
DC	8W8	DCA8W8SA197F0
DC	21WA4	DCA21WA4SA197F0
DD	24W7	DDA24W7SA197F0
DD	36W4	DDA36W4SA197F0

Note: For crimp (Size 20) contacts and tooling, see pages 83 & 275.

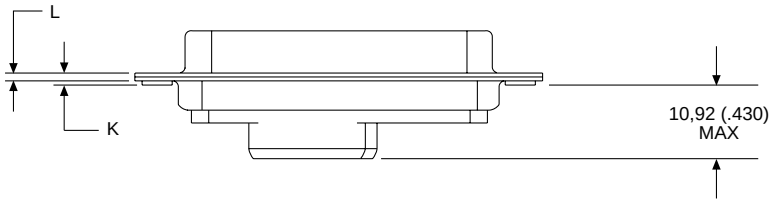

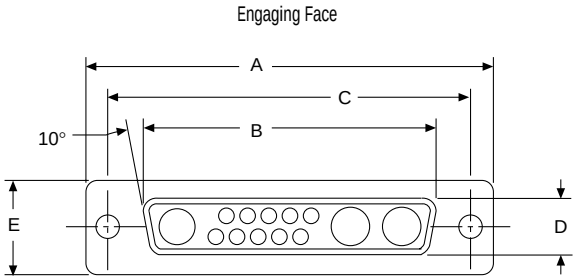

Dimensions

Shell Size	A ±0,38 (.015)	B ±0,13 (.005)	C ±0,13 (.005)	D ±0,13 (.005)	E ±0,38 (.015)	F ±0,25 (.010)	W ±0,38 (.015)	K ±0,317 (.0125)	L ±0,25 (.010)
DE	30,81 (1.213)	16,33 (.643)	24,99 (.984)	7,90 (.311)	12,55 (.494)	10,90 (.429)	6,94 (.273)	1,206 (.0475)	0,76 (.030)
DA	39,14 (1.541)	24,66 (.971)	33,32 (1.312)	7,90 (.311)	12,55 (.494)	10,90 (.429)	6,94 (.273)	1,206 (.0475)	0,76 (.030)
DB	53,04 (2.088)	38,38 (1.511)	47,04 (1.852)	7,90 (.311)	12,55 (.494)	10,90 (.429)	6,94 (.273)	1,206 (.0475)	0,76 (.030)
DC	69,32 (2.729)	54,84 (2.159)	63,50 (2.500)	7,90 (.311)	12,55 (.494)	10,90 (.429)	6,94 (.273)	1,206 (.0475)	0,76 (.030)
DD	66,93 (2.635)	52,42 (2.064)	61,11 (2.406)	10,74 (.423)	15,37 (.605)	10,90 (.429)	6,94 (.273)	1,206 (.0475)	0,76 (.030)

Shield Cans

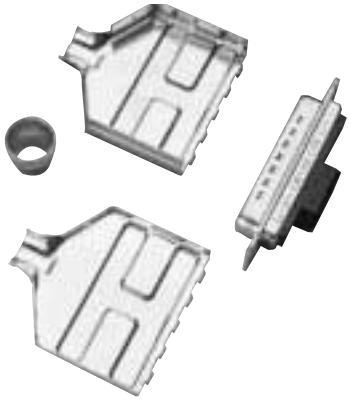

Order 1 top can, 1 bottom can, 1 ferrule per connector.

Ø Cable	Ferrule Ø A	Ferrule Part Number	Crimp Tool Part Number	Crimp Tool Position
4,8 - 5,5	6,25 (.246)	304-8810-000	D115433-1	B
5,5 - 6,2	6,25 (.246)	304-8810-000	D115433-1	A
6,2 - 7,2	8,20 (.323)	304-8811-000	D115433-2	B
7,2 - 8,2	8,20 (.323)	304-8811-000	D115433-2	A
8,2 - 9,5	11,50 (.452)	304-8812-000	D115433-3	B
9,5 - 11,1	11,50 (.452)	304-8813-000	D115433-3	A

Part Numbers

Top Can (B size):	348-8946-000
Bottom Can (B size):	348-8945-000

Note: For other available can sizes, consult factory for details.

Materials and Finishes

Shield Can and Ferrule	
Material:	Steel
Finish:	Tin

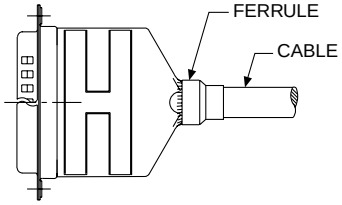

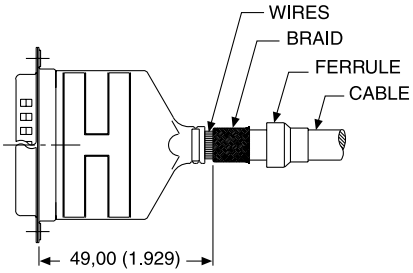

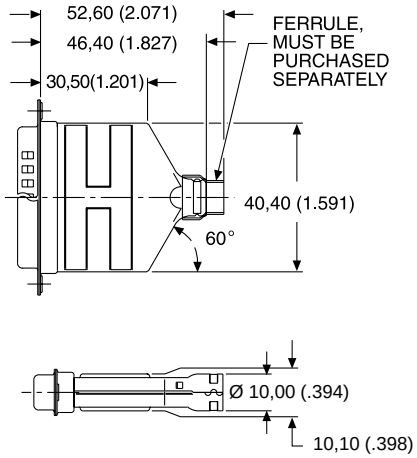

Ferrule

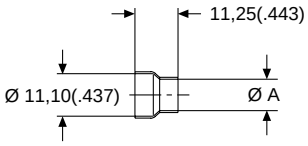

Wire Trim Dimensions

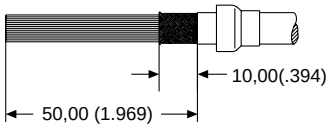

Crimp Tool Positions

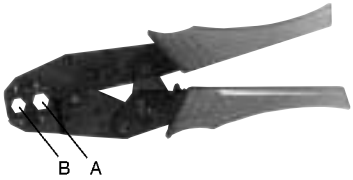

ITT Cannon

Dimensions are shown in mm (inch)
Dimensions subject to change

Crimp (Size 20) Contacts

Loose Contacts

Stamped contacts with insulation support are supplied loose for use with hand crimp tooling. Two sizes are available to accommodate wire ranges 20 - 26 AWG.

Pin Contact

Socket Contact

Finish	Part Number Pin Contact 24-26 AWG	Part Number Pin Contact 20-24 AWG	Part Number Socket Contact 24-26 AWG	Part Number Socket Contact 20-24 AWG
30µ inches Gold over Nickel	030-2487-017	030-2487-016	030-2488-017	030-2488-016

For tooling, see this page.

Reeled Contacts (5,000 Pieces per Reel)

Stamped contacts with insulation support are supplied on reels of 5,000 for use with semi-automatic strip and crimp machines. Two sizes are available to accommodate wire ranges 20 - 26 AWG.

Pin Contacts

Socket Contacts

Finish	Part Number Pin Contact 24-26 AWG	Part Number Pin Contact 20-24 AWG	Part Number Socket Contact 24-26 AWG	Part Number Socket Contact 20-24 AWG
Gold over Nickel	980-2000-925	980-2000-924	980-2000-926	980-2000-923
30µ inches Gold over Nickel	980-2000-946	980-2000-945	980-2000-944	980-2000-943

For semi-automatic tooling, see page 275.

Pin Contacts

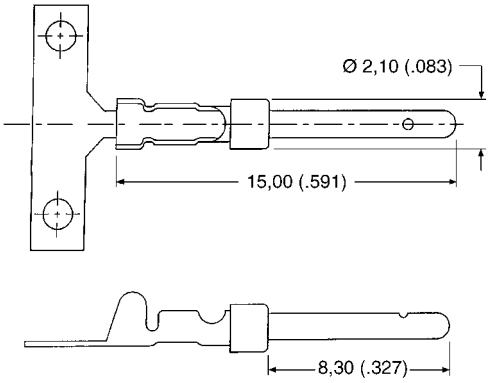

Socket Contacts

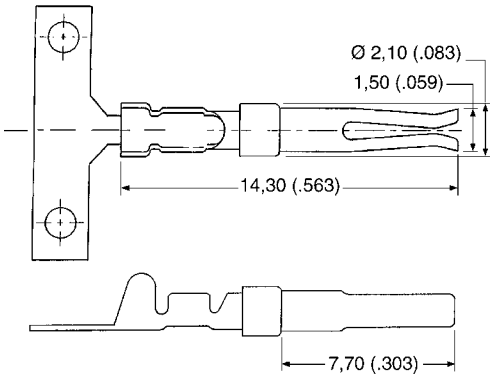

Tooling

CCT-D*A-1

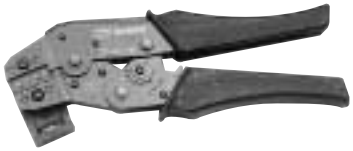

Hand Crimp Tool

Description	Part Number
CCT-D*A-1	995-2000-000

Extraction Tool

Description	Part Number	Wire Size
CIET-D*A-20-24	980-0008-135	20-24 AWG
CIET-D*A-24-26	980-0008-136	24-26 AWG

For semi-automatic tooling, see page 275.

Cable (Size 8) Loose Contacts — Coaxial 75 Ohm

Stamped Crimp/Crimp

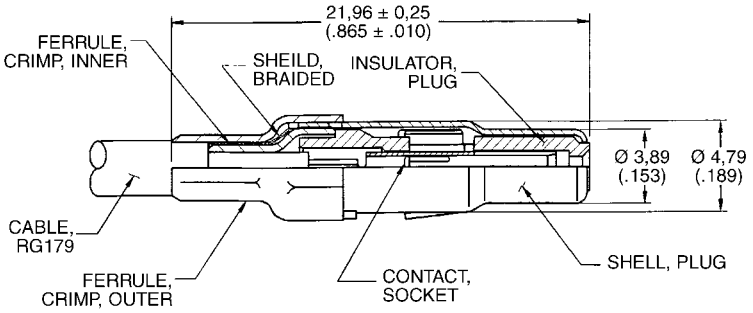

Recommended Wire Trim Dimensions

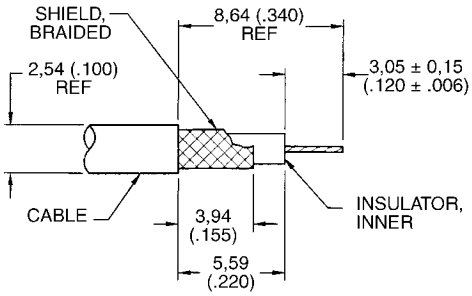

Kit (Body, Ferrule, Center Contact)

Stamped Crimp/Crimp	Kit Gold over Ni	Kit 30µ in. Gold over Ni	Kit 50µ in. Gold over Ni	RG Cable Number
Plug	D130322-2	D130322-1	D130322-6	179/U
Receptacle	D130344-1	D130344	D130344-2	179/U

Loose Components for High Volume (3 Pieces — Body, Ferrule, Center Contact)

Stamped Crimp/Crimp	Body	Ferrule	Center Contact Gold over Ni 10,000 Reel	Center Contact 30µ in. Gold over Ni 10,000 Reel
Plug	249-2272-000	304-0444-000	110238-1015	110238-1012
Receptacle	249-2271-000	304-0444-000	110238-1014	110238-1013

Tooling for Stamped Crimp/Crimp

Description	Crimping Tool	Tool Number
Stamped Center Conductor	Hand Crimp, "B" Crimp	CCTP-750HM
	Semi-Automatic Crimper	ABT-607 (Leased)
Stamped Outer Conductor	Hand Tool, Hex Crimp	CCTP-DM
	Pneumatic Hex Crimp	995-2000-094

For semi-automatic tooling, see page 275.

Dimensions are shown in mm (inch)
Dimensions subject to change

Cable (Size 8) Loose Contacts — Coaxial 75 Ohm — 90°

90° Crimp Braid/Solder Center Contact

	Part Number Gold over Ni	Part Number 30µ in. Gold over Ni	Part Number 50µ in. Gold over Ni
Plug	D130357-1	D130357	D130357-4
Receptacle	D130356-1	D130356	D130356-3

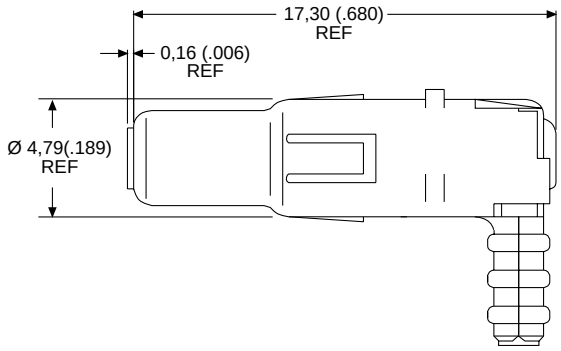

Plug

Note: Ferrule not shown.

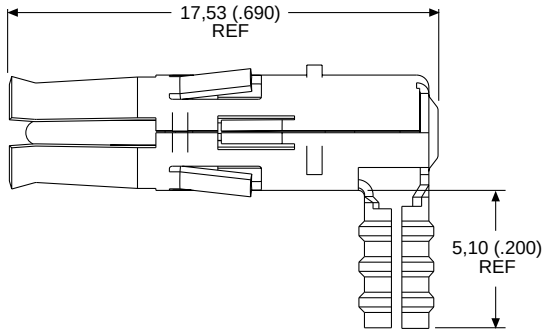

Receptacle

Note: Ferrule not shown.

Tooling for 90° Crimp Braid

Description	Part Number
Hand Tool:	995-0001-761
Die Set:	995-2000-110

Cable (Size 8) Loose Contacts — Coaxial 50 Ohm — Straight

Straight Crimp Braid

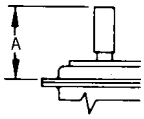

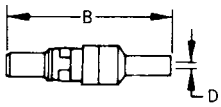

Plug

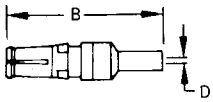

Receptacle

Note: Dimensions include outer sleeve.

	Part Number Gold Over Nickel	Part Number 50µ in. Gold Over Copper	A max.	B max.	D min.	RG Cable Number Old	RG Cable Number New
Plug	DM53740	DM53740-17	18,80 (.739)	24,00 (.945)	1,00 (.040)	196/U	178B/U
Plug	DM53740-1	DM53740-15	18,80 (.739)	24,00 (.945)	1,70 (.067)	187/U 188/U	179B/U 316B/U
Plug	DM53740-35	—	18,80 (.739)	24,00 (.945)	1,70 (.067)	—	RD316
Plug	DM53740-3	DM53740-16	21,50 (.847)	26,34 (1.037)	2,79 (.110)	195/U	180B/U
Plug	DM53740-5	DM53740-18	21,50 (.847)	26,34 (1.037)	3,18 (.125)	58/U	58B/U
Receptacle	DM53742	DM53742-18	18,80 (.739)	24,00 (.945)	1,00 (.040)	196/U	178B/U
Receptacle	DM53742-1	DM53742-16	18,80 (.739)	24,00 (.945)	1,70 (.067)	187/U 188/U	179B/U 316B/U
Receptacle	DM53742-36	—	18,80 (.739)	24,00 (.945)	1,70 (.067)	—	RD316
Receptacle	DM53742-3	DM53742-17	21,50 (.847)	26,34 (1.037)	2,79 (.110)	195/U	180B/U
Receptacle	DM53742-5	DM53742-19	21,50 (.847)	26,34 (1.037)	3,18 (.125)	58/U	58B/U

For crimp tooling, see page 89.

Straight Solder Braid

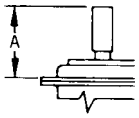

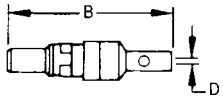

Plug

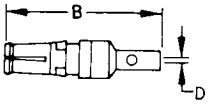

Receptacle

	Part Number Gold Over Nickel	Part Number 50µ in. Gold Over Copper	A max.	B max.	D min.	RG Cable Number Old	RG Cable Number New
Plug	DM53740-5008	DM53740-5105	18,80 (.739)	24,00 (.945)	1,00 (.040)	196/U	178B/U
Plug	DM53740-5001	DM53740-5099	18,80 (.739)	24,00 (.945)	1,70 (.067)	187/U 188/U	179B/U 316B/U
Plug	DM53740-5145	—	18,80 (.739)	24,00 (.945)	1,70 (.067)	—	RD316
Plug	DM53740-5002	DM53740-5104	21,50 (.847)	26,34 (1.037)	2,79 (.110)	195/U	180B/U
Plug	DM53740-5005	DM53740-5101	21,50 (.847)	26,34 (1.037)	3,18 (.125)	58/U	58/U
Plug (Short Type)	DM53740-5000	DM53740-5100	17,00 (.670)	22,20 (.874)	1,14 (.045)	196/U	178B/U
Receptacle	DM53742-5006	DM53742-5092	18,80 (.739)	24,00 (.945)	1,00 (.040)	196/U	178B/U
Receptacle	DM53742-5001	DM53742-5089	18,80 (.739)	24,00 (.945)	1,70 (.067)	187/U 188/U	179B/U 316B/U
Receptacle	DM53742-5126	—	18,80 (.739)	24,00 (.945)	1,70 (.067)	—	RD316
Receptacle	DM53742-5002	DM53742-5091	21,50 (.847)	26,34 (1.037)	2,79 (.110)	195/U	180B/U
Receptacle	DM53742-5004	DM53742-5086	21,50 (.847)	26,34 (1.037)	3,18 (.125)	58/U	58/U
Receptacle (Short Type)	DM53742-5000	DM53742-5085	17,00 (.670)	22,20 (.874)	1,14 (.045)	196/U	178B/U

Dimensions are shown in mm (inch)
Dimensions subject to change

Cable (Size 8) Loose Contacts — Coaxial 50 Ohm — 90°

90° Crimp Braid

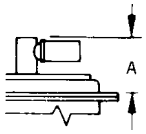

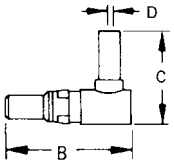

Plug

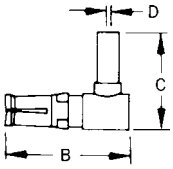

Receptacle

Note: Dimensions include outer sleeve.

	Part Number Gold Over Nickel	Part Number 50µ in. Gold Over Copper	A max.	B max.	C	D ±0,13 (.005)	RG Cable Number Old	New
Plug	DM53741	DM53741-12	13,46 (.530)	18,92 (.745)	15,10 (.594)	1,14 (.045)	196/U	178B/U
Plug	DM53741-1	DM53741-11	13,46 (.530)	18,92 (.745)	15,10 (.594)	1,83 (.072)	187/U 188/U	179B/U 316B/U
Plug	DM53741-3	DM53741-10	13,46 (.530)	18,92 (.745)	16,00 (.630)	2,79 (.110)	195/U	180B/U
Plug	DM53741-4	DM53741-13	13,46 (.530)	18,92 (.745)	16,00 (.630)	3,18 (.125)	58/U	58B/U
Receptacle	DM53743-2	DM53743-18	13,46 (.530)	18,92 (.745)	15,09 (.594)	1,14 (.045)	196/U	178B/U
Receptacle	DM53743-3	DM53743-16	13,46 (.530)	18,92 (.745)	15,09 (.594)	1,83 (.072)	187/U 188/U	179B/U 316B/U
Receptacle	DM53743-5	DM53743-17	13,46 (.530)	18,92 (.745)	16,00 (.630)	2,79 (.110)	195/U	180B/U
Receptacle	DM53743-6	DM53743-19	13,46 (.530)	18,92 (.745)	16,00 (.630)	3,18 (.125)	58/U	58B/U

For crimp tooling, see page 89.

90° Solder Braid

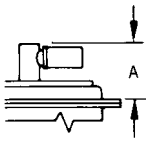

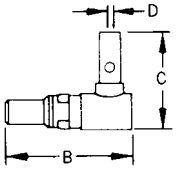

Plug

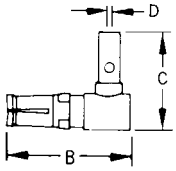

Receptacle

	Part Number Gold Over Nickel	Part Number 50µ in. Gold Over Copper	A max.	B max.	C	D min.	RG Cable Number Old	New
Plug	DM53741-5000	DM53741-5059	13,46 (.530)	18,92 (.745)	15,10 (.594)	1,00 (.040)	196/U	178B/U
Plug	DM53741-5001	DM53741-5062	13,46 (.530)	18,92 (.745)	15,10 (.594)	1,70 (.067)	187/U 188/U	179B/U 316B/U
Plug	DM53741-5003	DM53741-5063	13,46 (.530)	18,92 (.745)	16,00 (.630)	2,79 (.110)	195/U	180B/U
Plug	DM53741-5004	DM53741-5060	13,46 (.530)	18,92 (.745)	16,00 (.630)	3,18 (.125)	58/U	58/U
Receptacle	DM53743-5000	DM53743-5073	13,46 (.530)	18,92 (.745)	15,09 (.594)	1,00 (.040)	196/U	178B/U
Receptacle	DM53743-5001	DM53743-5076	13,46 (.530)	18,92 (.745)	15,09 (.594)	1,70 (.067)	187/U 188/U	179B/U 316B/U
Receptacle	DM53743-5003	DM53743-5077	13,46 (.530)	18,92 (.745)	16,00 (.630)	2,79 (.110)	195/U	180B/U
Receptacle	DM53743-5004	DM53743-5074	13,46 (.530)	18,92 (.745)	16,00 (.630)	3,18 (.125)	58/U	58B/U

Insertion/Extraction Instructions for Coaxial, High Power and High Voltage Contacts

Insertion Tool

No insertion tool is required. The contact is easily snapped in from the rear of the connector manually.

Insertion Instructions

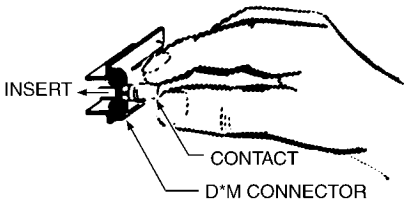

Extraction Tool

CET-C6B-2

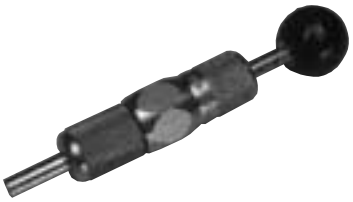

The CET-C6B-2 tool extracts all coaxial, high power and high voltage contacts (plug and receptacle).

Description	Part Number
CET-C6B-2	070064-0002

Operating Instructions

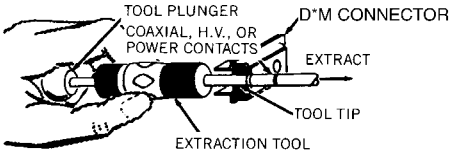

To extract the coaxial contact, hold the tool by the body and insert the tip into the front of the contact cavity until it bottoms and closes the coaxial retaining ring. Holding the body in this position securely enough to keep coaxial retaining ring closed, push the plunger; contact will be pushed out of the rear of the assembly.

Dimensions are shown in mm (inch)
Dimensions subject to change

Coaxial Assembly Instructions

Straight and 90° Coaxial Assembly
STEP 1:
Slide the outer ring over the cable jacket. Trim the cable as specified in the table of Coaxial Cable Trim Dimensions (see this page). Insert the cable dielectric and center conductor into the inside diameter of the inner sleeve. Then solder the center conductor to the coaxial center contact.

Straight Coaxial

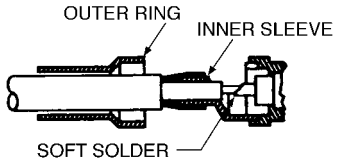

90° Coaxial

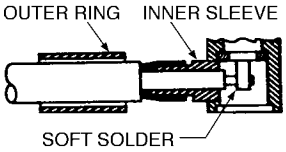

Straight and 90° Coaxial Assembly
STEP 2:
Slide the outer ring forward until it is flush with the coaxial shell containing the braid between the outer ring and the inner sleeve. For solder type coaxes, soft solder the outer ring to the assembly through the cross-drilled solder hold. For crimp type coaxes, crimp with the appropriate tool in the area defined.

Straight Coaxial

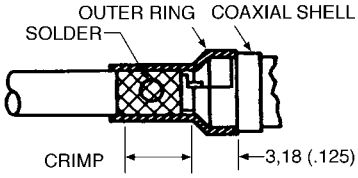

90° Coaxial

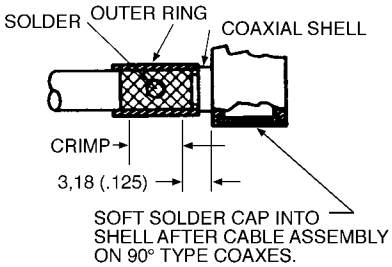

Coaxial Cable Trim Dimensions

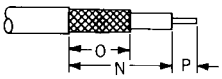

RG Cable Number	Straight Coaxial N ± 0,25 (.010)	Straight Coaxial O ± 0,25 (.010)	Straight Coaxial P ± 0,25 (.010)	90° Coaxial N ± 0,25 (.010)	90° Coaxial O ± 0,25 (.010)	90° Coaxial P ± 0,25 (.010)
196/U, 178B/U, 187/U, 188/U, 179B/U, 316B/U	7,92 (.312)	6,35 (.250)	1,98 (.078)	9,52 (.375)	5,94 (.234)	1,57 (.062)
195/U, 180B/U, 58/U, 58B/U	9,52 (.375)	7,92 (.312)	1,98 (.078)	10,69 (.422)	7,92 (.312)	2,39 (.094)

Crimp Tooling

Hand tool with integral die set for all coaxial straight crimp braid.

RG Cable Number	Tool Part Number	Description	Closure
196/U, 178B/U	070051-0000	CCT-DM	C
187/U, 179B/U, 188/U, 316B/U	070051-0000	CCT-DM	B
195/U, 180B/U, 58/U, 58B/U	070051-0000	CCT-DM	A

Cable (Size 8) Loose Contacts — High Power — Solder

Plug

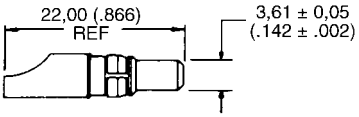

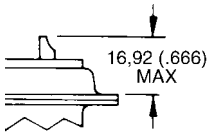

Part Number Gold Over Nickel	Part Number 50µ in. Gold over Ni	Current Rating	Wire Size
DM53745-1	DM53745-28	40 A	8 AWG
DM53745-7	DM53745-27	20 A	12 AWG
DM53745-8	DM53745-25	10 A	16 AWG

Receptacle

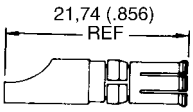

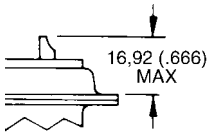

Part Number Gold Over Nickel	Part Number 50µ in. Gold over Ni	Current Rating	Wire Size
DM53744-1	DM53744-21	40 A	8 AWG
DM53744-6	DM53744-25	20 A	12 AWG
DM53744-7	DM53744-24	10 A	16 AWG

Cable (Size 8) Loose Contacts — High Power — Crimp

Plug

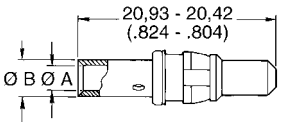

Recommended Wire Trim Length

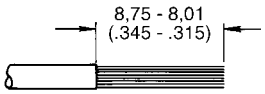

Part Number Gold Over Nickel	Part Number 30µ in. Gold over Ni	Part Number 50µ in. Gold over Ni	ØA max.	ØB max.	Current Rating	Wire Size
DM130338-4	DM130338	DM130338-1	4,60 (.181)	5,84 (.230)	40 A	8 AWG
DM130339-4	DM130339	DM130339-1	2,54 (.100)	5,54 (.218)	20 A	12 AWG
DM130340-4	DM130340	DM130340-1	1,07 (.067)	2,59 (.102)	10 A	16 AWG

Receptacle

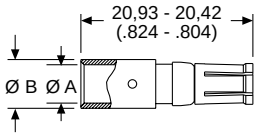

Recommended Wire Trim Length

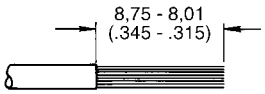

Part Number Gold Over Nickel	Part Number 30µ in. Gold over Ni	Part Number 50µ in. Gold over Ni	ØA max.	ØB max.	Current Rating	Wire Size
DM130341-4	DM130341	DM130341-1	4,60 (.181)	5,84 (.230)	40 A	8 AWG
DM130342-4	DM130342	DM130342-1	2,54 (.100)	5,54 (.218)	20 A	12 AWG
DM130343-4	DM130343	DM130343-1	1,07 (.067)	2,59 (.102)	10 A	16 AWG

High Power Crimp Tooling

M300-BT

Wire Size	Crimp Tool/Locator		
	Crimp Tool	Tool Setting Number	Locator
8 AWG	M300-BT	6	TP968
10 AWG	M300-BT	5	TP968
12/14 AWG	M300-BT	1	TP968
16 AWG	FT-8	6	TH554
18 AWG	FT-8	5	TH554

ITT Cannon

Dimensions are shown in mm (inch)
Dimensions subject to change

Cable (Size 8) Loose Contacts — High Voltage — Straight

Plug

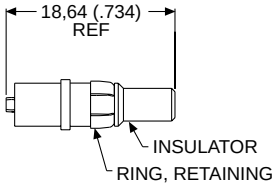

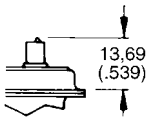

For tooling, see page 88.

Part Number Gold over Ni	Part Number 50µ. in. Gold	Wire Size
DM51157	DM51157-8	20 AWG

Receptacle

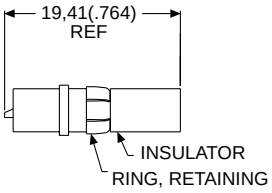

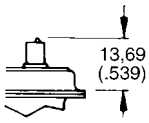

For tooling, see page 88.

Part Number Gold over Ni	Part Number 50µ. in. Gold	Wire Size
DM51155	DM51155-7	20 AWG

Cable (Size 8) Loose Contacts — High Voltage — 90°

Plug

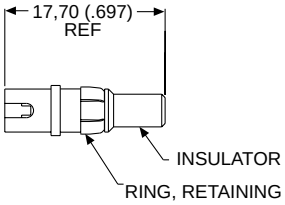

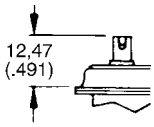

For tooling, see page 88.

Part Number Gold over Ni	Part Number 50µ. in. Gold	Wire Size
DM51157-5000	DM51157-5005	20 AWG

Receptacle

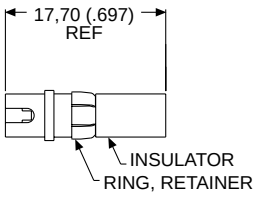

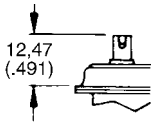

For tooling, see page 88.

Part Number Gold over Ni	Part Number 50µ. in. Gold	Wire Size
DM51155-5000	DM51155-5004	20 AWG

PCB (Size 8) Loose Contacts — Coaxial 75 Ohm — Straight

Plug

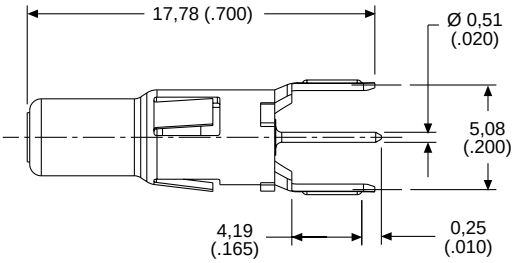

Description	Part Number
Plug	DM130358-2

Receptacle

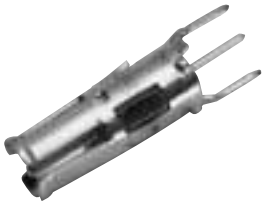

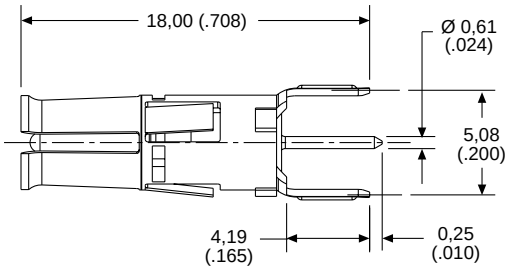

Description	Part Number
Receptacle	DM130346-2

PCB (Size 8) Loose Contacts — Coaxial 75 Ohm — 90°

Plug

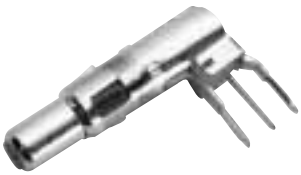

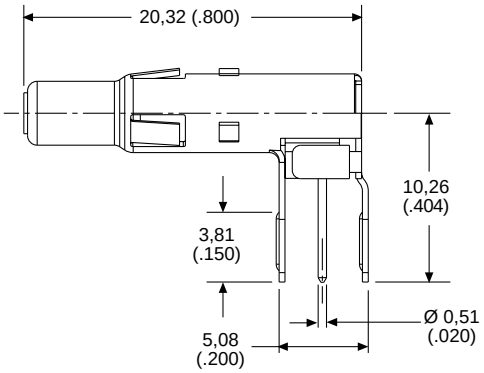

Description	Part Number
Plug	DM130352-2

Receptacle

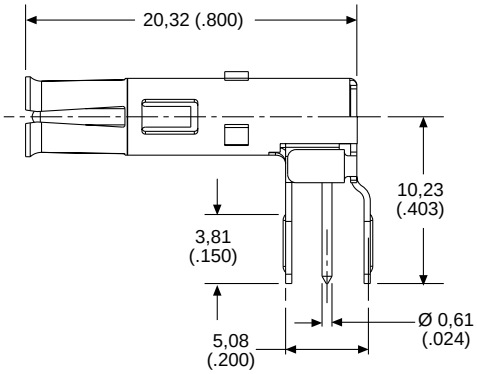

Description	Part Number
Receptacle	DM130321-3

ITT Cannon

Dimensions are shown in mm (inch)
Dimensions subject to change

PCB (Size 8) Loose Contacts — High Power — Straight

Pin

Description	Part Number
Pin	DM53745-110

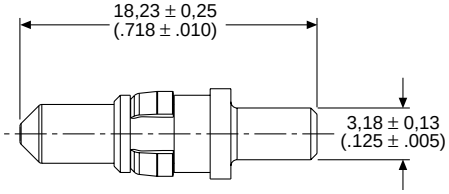

Socket

Description	Part Number
Socket	DM53744-98

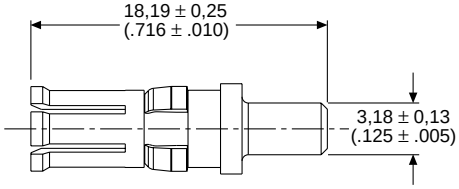

PCB (Size 8) Loose Contacts — High Power —90°

Pin

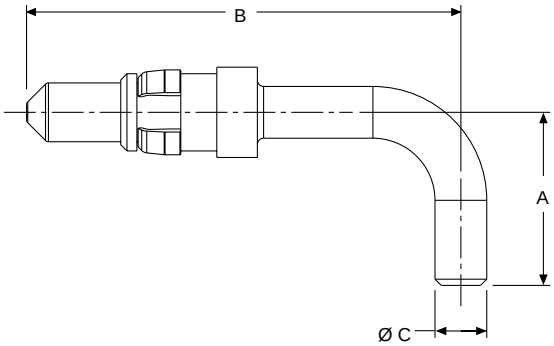

Shell Size	Part Number	A ± 0,25 (.010)	B ±0,25 (.010)	Ø C ±0,13 (.005)
DE, DA, DB, DC	DM53745-104	10,62 (.418)	26,64 (1.049)	3,18 (.125)
DD	DM53745-107	13,41 (.528)	26,64 (1.049)	3,18 (.125)
European Footprint DE, DA, DB, DC, DD	DM53745-120	18,06 (.711)	11,00 (.433)	2,90 (.114)

Socket

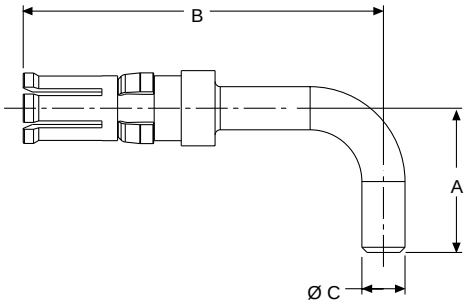

Shell Size	Part Number	A ± 0,25 (.010)	B ±0,25 (.010)	Ø C ±0,13 (.005)
DE, DA, DB, DC	DM53744-92	13,41 (.528)	26,52 (1.044)	3,18 (.125)
DD	DM53744-95	10,62 (.418)	26,52 (1.044)	3,18 (.125)
European Footprint DE, DA, DB, DC, DD	DM53744-107	11,00 (.433)	17,93 (.706)	2,90 (.114)

PCB (Size 8) Loose Contacts — High Voltage — Straight

Plug

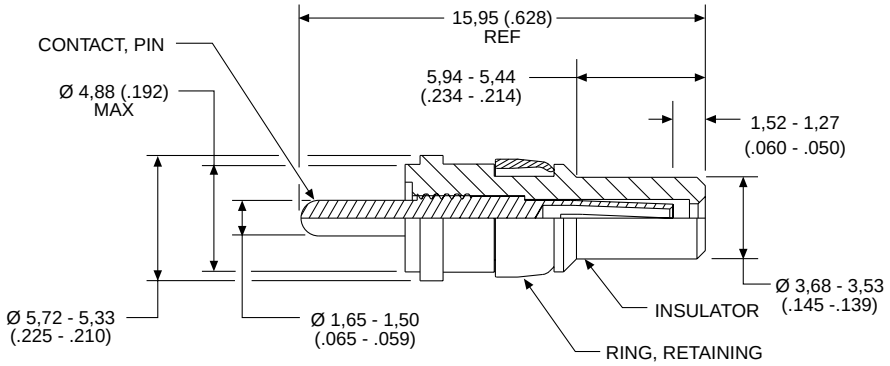

Part Number Gold over Ni	Part Number 50µ in. Gold
DM51157-13	DM51157-14

Receptacle

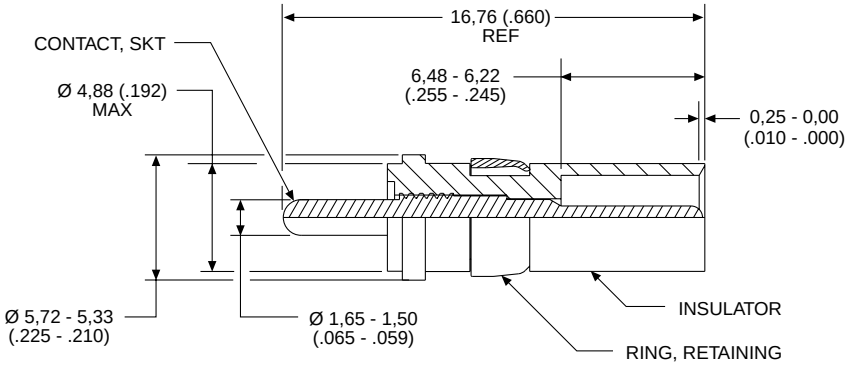

Part Number Gold over Ni	Part Number 50µ in. Gold
DM51155-12	DM51155-13

ITT Cannon

Dimensions are shown in mm (inch)
Dimensions subject to change

PCB Guide Pin and Socket

Installs into any Combo D, Size 8 cavity. This guide pin and socket system is ideal for blind mate applications where space is limited.

PCB Guide Pin

Part Number	Material	Finish
DM53745-126	Copper Alloy	Tin

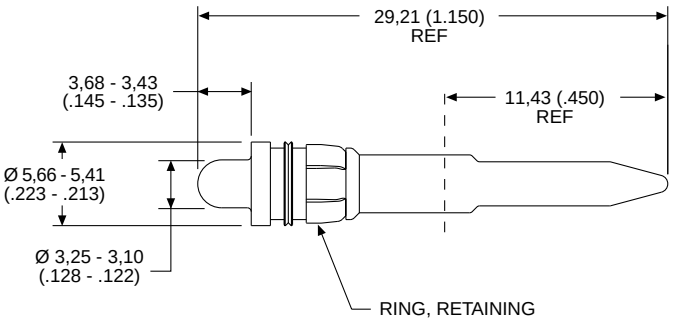

PCB Guide Socket

Part Number	Material	Finish
248-2967-000	Copper Alloy	Tin

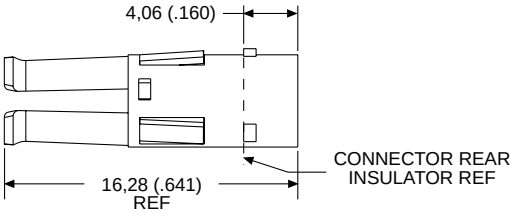

Selection Index Page

Commercial Shielded Micro D

An Introduction 97
Locking/Latching Options 98
Cable Assemblies — Pigtail. 98
PCB Connector 90° — Single or Stacked. 99
Cable Connectors (Unassembled Components) 100
Crimp Contacts 100
Tooling. 101
MDSM SSA Compatible Cable Assemblies 102

Dimensions are shown in mm (inch)
Dimensions subject to change

MDSM is the commercial industry's smallest D-type connector for shielded I/O wire-to-board applications. Requiring less than 1/3 the area of a traditional D Subminiature connector, MDSM is designed for situations where space and EMI shielding are the primary design drivers.

Unlike other micro connectors, MDSM's rugged construction and unique contact design combined with a PdNi contact finish provide durability of 10,000 mating cycles. All of this comes in a sleek package that includes a snap together shield can and a slide over boot producing a cable assembly with an overmolded look and a low assembled cost. MDSM is an ideal solution for applications where size, shielding, durability and aesthetics are key design criteria.

Applications:
- Electronic Notepads
- VME Cards
- Multiplexors
- Serial Storage Devices
- Computer Workstations
- Hand Held Devices
- Bar Code Scanners

Product Features

- 1,27 (.050) Pitch / Saves Space
- Fully Shielded / Reduces EMI
- Crimp Contacts / Applied Cost Savings
- Accessories Included / Fewer Part Numbers
- PdNi Plating / 10,000 Mating Cycles
- Stacked Versions / Saves Horizontal Space
- Slide Over Boot / Results in Overmolded Appearance
- Choice of Two Different Latching Options (Thumbscrew / Push-Pull)
- Approvals & Certifications
  - SSA (Serial Storage Architecture)
  - U.L. File Number E8572
  - ISO 9001

Specifications

Temperature Rating	− 55°C to 125°C
Current Rating	1 A — temp dependent
Contact Resistance	20 mΩ Max.
Insulation Resistance	5000 MΩ Min.
Dielectric Withstanding Voltage	350 V at Sea Level
Durability	10,000 Mating Cycles
Shock / Vibration	50 G's / 50 G's
Wire Size	26 to 30 AWG

Materials and Finishes

Description	Material	Finish
Shell	Steel	Nickel
Shield Can	Steel	Tin
Cover	Steel	Tin
Insulator	Thermoplastic, UL94 V-O	None
Contacts	Copper Alloy	Gold flash over 30 microinches PdNi in mating area, Tin on balance

Contact Arrangements

(Face View of Pin Insert — Use Mirror Image for Socket Side)

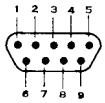

9 Contacts

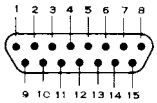

15 Contacts

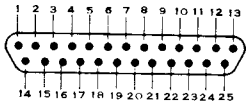

25 Contacts

ITT Cannon

Dimensions are shown in mm (inch)
Dimensions subject to change

Locking/Latching Options

Jackscrew

The jackscrew locking system is designed for applications which require a secure connection. Utilize thumbscrews when the connectors are infrequently unmated.

Push/Pull

The push/pull latching system is designed for applications which require a quick connect and disconnect. A spring retention mechanism latches to a post on the board side to prevent unintentional unmatings.

Z10 Jackpost

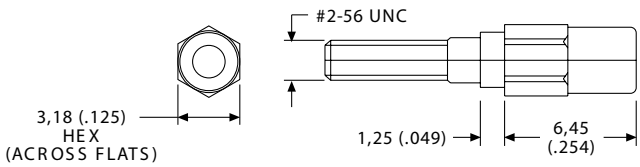

Note: Two Jackposts supplied with boardside connectors.

Z42 Jackpost

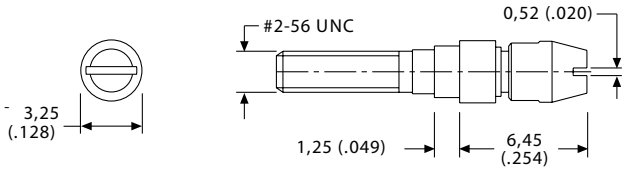

Note: Two Jackposts supplied with boardside connectors.

Dimensions are shown in mm (inch)
Dimensions subject to change

PCB Connector 90° - Single

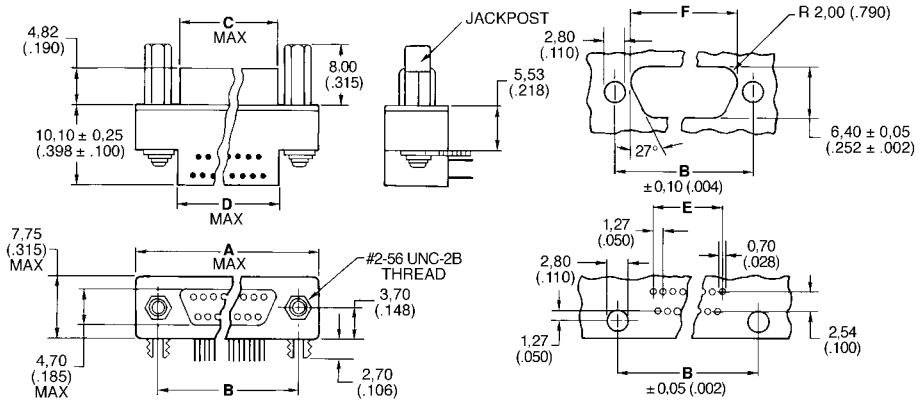

Note: Standard jackpost offering recommended for use with .060 panel.

No. of Contacts	Part Numbers - Single		A max.	B	C max.	D max.	E	F ±0,05 (.002)
	Thumbscrew	Push/Pull						
9	MDSM-9PE-Z10-VR25*	MDSM-9E-Z42-VR25*	19,90 (.783)	14,35 (.565)	8,60 (.339)	9,00 (.354)	5,08 (.200)	10,24 (.403)
15	MDSM-15PE-Z10-VR22	MDSM-15PE-Z42-VR22	23,60 (.929)	18,16 (.715)	12,30 (.484)	12,90 (.508)	8,89 (.350)	14,01 (.551)
25	MDSM-25PE-Z10-VR17	MDSM-25PE-Z42-VR17	29,95 (1.179)	24,51 (.965)	18,65 (.734)	19,25 (.758)	15,24 (.600)	20,35 (.801)

*For use with SSA applications

PCB Connector 90° - Stacked

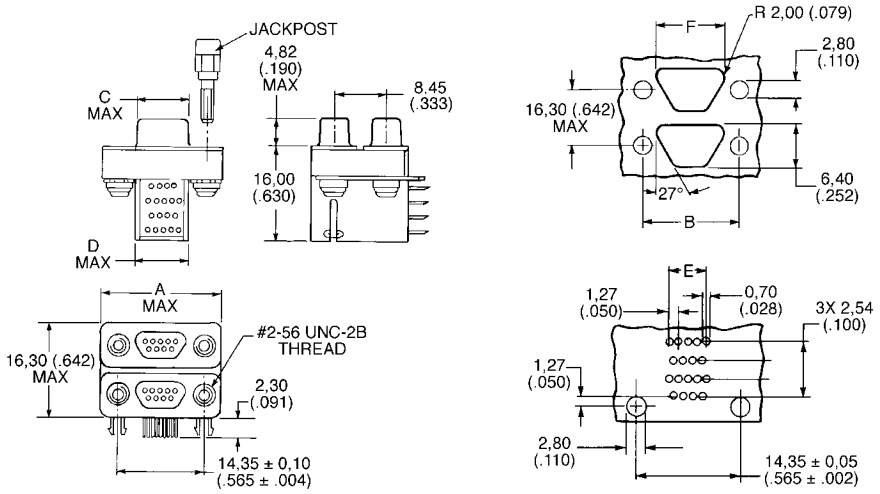

No. of Contacts	Part Numbers - Stacked		A max.	B	C max.	D max.	E	F
	Thumbscrew	Push/Pull						
18	MDSM-18PE-Z10-VR25*	MDSM-18PE-Z42-VR25*	19,90 (.783)	14,35 (.565)	8,60 (.339)	9,00 (.354)	5,08 (.200)	10,24 (.403)
30	MDSM-30PE-Z10-VR22	MDSM-30PE-Z42-VR22	23,50 (.925)	18,16 (.715)	12,30 (.484)	12,71 (.500)	8,89 (.350)	14,00 (.551)

*For use with SSA applications

Cable Connectors (Unassembled Components)

Jackscrew

Cable connectors are supplied as complete kits with insulator, hood, locking hardware, shell/shield assembly, and cover, bulk packaged.

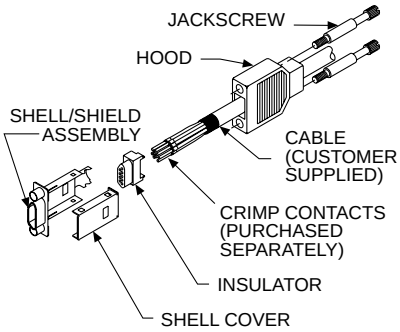

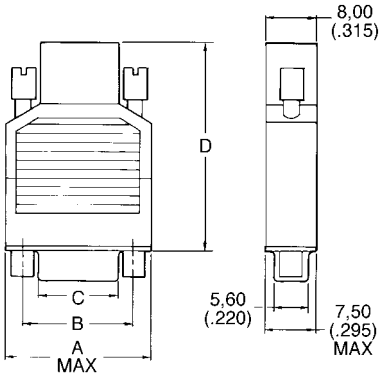

Push/Pull

Cable connectors are supplied as complete kits with insulator, hood, shell/shield assembly, and cover, bulk packaged.

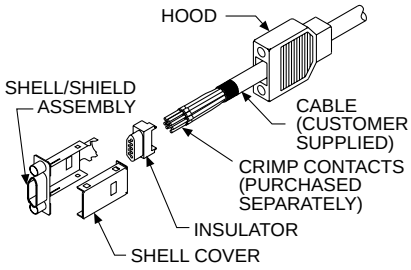

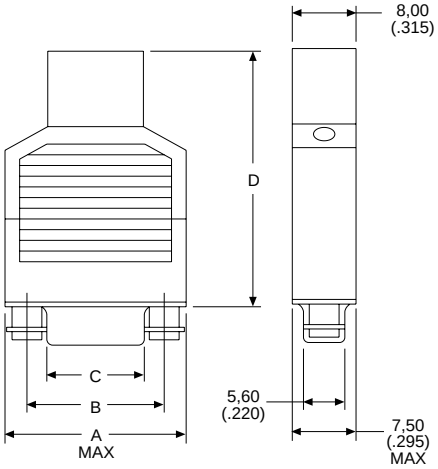

Layout	Jackscrew Part Numbers	Push/Pull Part Numbers	A max.	B 0,10 (.004)	C 0,10 (.004)	D max.	Max. Cable Entry
9	MDSM-9SC-Z11-VS1	MDSM-9SC-Z24-VS1	19,90 (.783)	14,35 (.565)	9,45 (.372)	35,50 (1.40)	5,70 (.224)
15	MDSM-15SC-Z11-VS1	MDSM-15SC-Z24-VS1	23,70 (.993)	18,16 (.715)	13,17 (.519)	35,50 (1.40)	6,70 (.264)
25	MDSM-25SC-Z11-VS1	MDSM-25SC-Z24-VS1	30,05 (1.183)	24,51 (.965)	19,52 (.769)	42,50 (1.67)	7,90 (.311)

Note: VS1 refers to packaging multiples of 100.
Contacts are sold separately, see this page.

Crimp Contacts

Wire Trim Dimensions

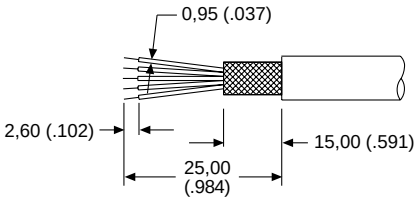

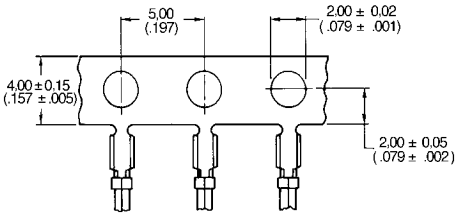

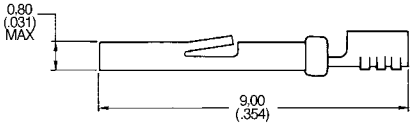

	Part Numbers	
	1,000 Piece Reel	10,000 Piece Reel
Socket	MDS-S-TS	MDS-S-RL

For crimp tooling, see page 101.

ITT Cannon

Dimensions are shown in mm (inch)
Dimensions subject to change

Contact Crimping Tools

Parallel Action Low Volume Hand Tool

Part Number: CCTP-MDS

Note: For use with individual contacts (break off reel MDS-S-TS or MDS-S-RL.

Hand Tool

Part Number: CCTR-MDS

Note: For use with reeled contacts - Part Number MDS-S-TS.

Semi-Automatic Crimper/Stripper

Part Number: ABT-620-MDS (Lease Only)

Note: For use with reeled contacts - Part Number MDS-S-RL.
For additional information, see page 275.
Crimp dies for SSA Cable will be offered by ITT Cannon. Consult factory for details.

Contact Insertion/Extraction Tools

Jackpost Tool

Part Number: CIET-MDSM

Note: For use with Z10 Jackpost.

Insertion Tool

Part Number: 120090-0102

Note: Contacts cannot be removed from MDSM connectors.

Shield Crimp Tooling

Shield crimping requires four items; one press, one locator, and one each of the two dies listed below.
Locator and Dies for Shield Termination Ordered Separately

	Part Numbers	
Layout	Locator	Die
9	317-8666-013	274-8649-332/274-8649-333
15	317-8666-014	274-8649-334/274-8649-335
25	317-8666-016	274-8649-338/274-8649-339

Note: For assembly instructions and crimping information, refer to Manual #MY-1/190.

Hand Press

Part Number: CHP-MDSM-SR

Pneumatic Press

Part Number: CPT-MDSM-SR

MDSM SSA Compatible Cable Assemblies

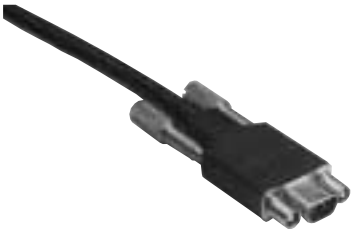

ITT Cannon's 9 position MDSM connectors have been designed into the ANSI specification called SSA, ''Serial Storage Architecture,'' as the external I/O. SSA is a new serial interface for interconnecting storage devices, storage subsystems, servers and workstations. Storage subsystems are increasing in function, availability, density and performance. With this comes the trend for them to become more complex and ITT Cannon has the interconnect system which meets SSA's high performance requirements.

SSA is an architecture which allows these new subsystems to be implemented more easily and at lower costs than other new high speed parallel interfaces. SSA permits the transfer of data at progressively higher speeds - 20 MB/sec interface currently available with 40 MB/sec becoming available in 1997/98. ITT Cannon's MDSM connector not only functions at these high speeds, but also brings to SSA smaller, less cumbersome and higher reliability cables and connectors than current options.

ITT Cannon is offering SSA compatable external cable assemblies in six different lengths to meet your needs. These assemblies consist of two MDSM 9SC type cable connectors terminated to SSA specified external cable.

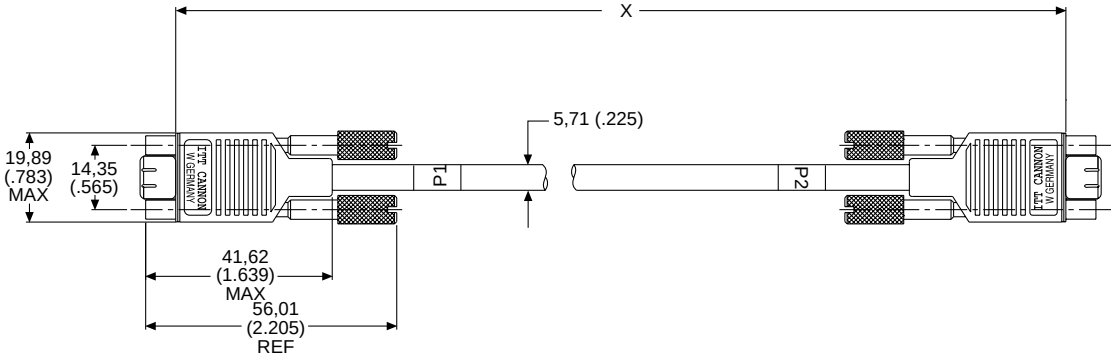

Note: Cables shown with Z50 thumbscrews.

Part Number	X Meter (Feet)	Tolerance
CA112104	0,50 (1.600)	±25,00 (1.000)
CA112104-1	1,00 (2.200)	±25,00 (1.000)
CA112104-2	3,00 (9.800)	±25,00 (1.000)
CA112104-3	5,00 (16.400)	±64,00 (2.500)
CA112104-4	10,00 (32.800)	±64,00 (2.500)
CA112104-5	20,00 (65.600)	±64,00 (2.500)

Note: For push/pull assemblies or other thumbscrews, please consult the factory.
Crimp dies for SSA applications will be offered by ITT Cannon. Consult factory for details.

Dimensions are shown in mm (inch)
Dimensions subject to change

Pinout

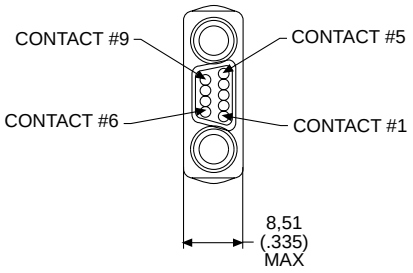

SSA External Cable Wiring Table

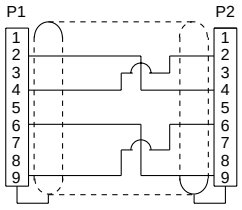

Note: Shield connected to both shells.

External Cable Pinouts

P1		P2	
Pin	Signal Name	Pin	Signal Name
2	LineOut−	4	LineIn−
6	LineOut+	9	LineIn+
4	LineIn−	2	LineOut−
9	LineIn+	6	LineOut+

Note: Pins 1, 3, 5, 7 and 8 are not connected.

SSA External Cable Wire Cross Section (For Reference Only)

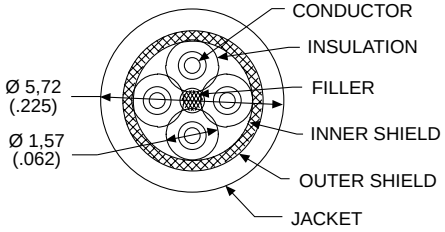

Transfer Impedance Performance
Requirements for External SSA Connections

Frequency MHz	Value (dB-Ohm)(max.)
30	−25
159	−16
500	−10

Selection Index Page

Filter D
An Introduction to D*JK and D*JT 105
D*JK Filter Performance and Electrical Data 106
D*JT Filter Performance and Electrical Data 107
D*JK Connectors
Standard Footprint .318♦ or .283♦♦ inches
90° PC Tails 108
90° PC Tails, Metal Brackets 112
European Footprint 10,2♦ or 9,4♦♦ mm
90° PC Tails 110
90° PC Tails, Metal Brackets 114
90° PC Tails, Plastic Brackets & Grounding Straps 116
90° PC Tails, Plastic Brackets 118
Straight PC Tails 120
D*JT Connectors
Solder Cup 122
Combo — High Power 90° 124
Combo — High Power Straight 126
Combo — High Power Solder Cup 128

♦ Connector footprint measured from the front shell.
♦♦ Connector footprint measured from the rear shell.

Dimensions are shown in mm (inch)
Dimensions subject to change

D*JK/D*JT

Filter connectors series D*JK and D*JT from ITT Cannon especially designed for commercial applications provide excellent protection against EMI and RFI.

Using D Subminiature standard components a cost-effective production can be achieved as well as 100% compatibility with equivalent products according to DIN 41652. D Subminiature standard accessories can be used.

High quality tubular ceramic capacitors are assembled onto the D*JK contacts and soldered to contact and backshell while series D*JT connectors apply planar array filters.

Applications:
- EMI/RFI Sensitive Electronics
- Test & Measurement Equipment
- Computer Equipment
- Medical Equipment
- Telecommunication Transmission

Product Features

- HF–tightness and mechanical stability by closed backshell
- Free-stamped grounding fingers (pin connector only)
- Straight and 90° solder pins (D*JK)
- Solder cups, straight and 90° solder pins (D*JT)
- Versatile mounting possibilities (brackets, captive nuts)
- Contact finsh according to performance class 2 (standard) or class 1

Specifications

Temperature Range Per DIN IEC 68 Part 1	−55°C to 125°C

Materials and Finishes

Description	Material	Finish
Shell	Steel	Tin
Insulator	Thermoplastic, UL 94V-0	None
Contacts	Copper Alloy	Gold over Nickel

Mechanical Data

Coupling	Friction, accessories
Polarization	Keystone shape of shell
Termination	PC tails, straight and 90° Solder cups

D*JK Filter Performance

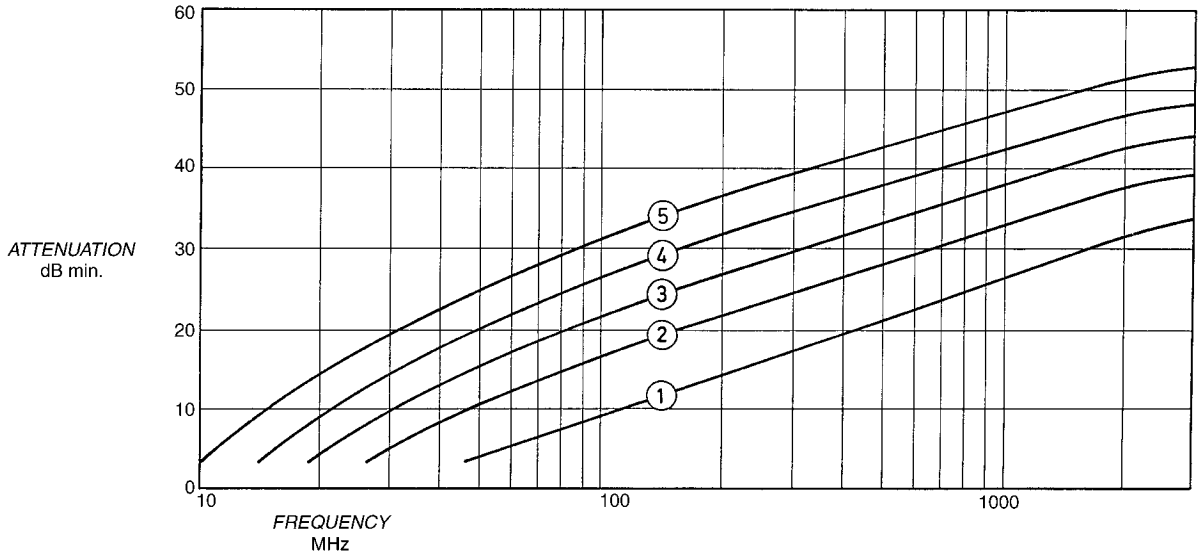

D*JK Electrical Data

Voltage rating (working)	100 VDC
Current rating	5 A
Insulation resistance, electrification time 30 s, temperature 25°C	5000 MΩ min./100 V
Dielectric Withstanding Voltage (Sea Level) 500 micro amps max. charge/discharge	250 VDC
Filter Type C	Capacitor
Filter Symbol per DIN	

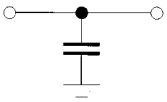

Filter designation	5	4	3	2	1
Capacitance, type at 1 KHz, 0,1 Vrms, 25°C	1500 pF	1000 pF	680 pF	470 pF	330 pF
Frequency MHz	Attenuation db min.	Attenuation db min.	Attenuation db min.	Attenuation db min.	Attenuation db min.
10	3	—	—	—	—
30	20	14	10	7	2
100	31	27	22	18	9
300	39	35	30	27	18
1000	47	42	37	32	28
2000	51	46	42	36	31

Attenuation per MIL-STD-220 at 25°C with no applied voltage or current

Dimensions are shown in mm (inch)
Dimensions subject to change

D*JT Filter Performance

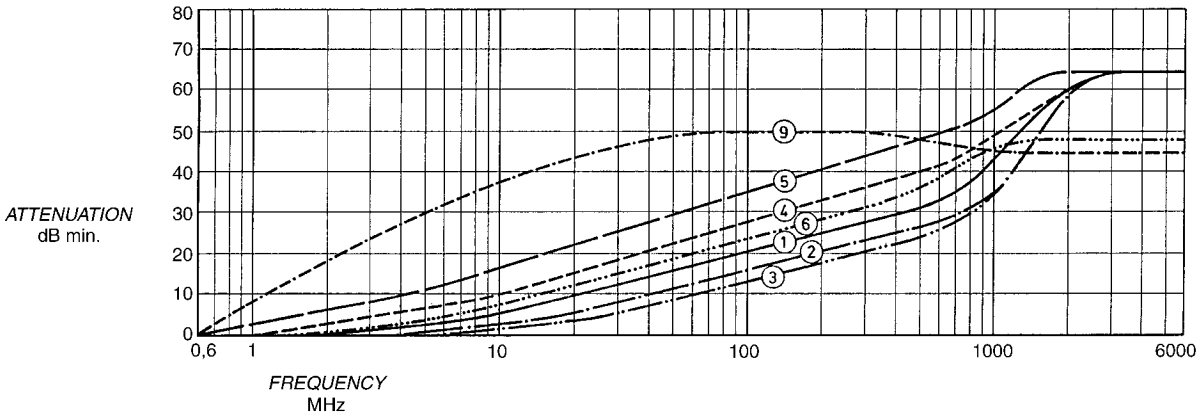

D*JT Electrical Data

Voltage rating (working)	200 VDC/120 Vrms, 400 Hz
Current rating	5 A (Size 20 contacts), 30 A (Size 8 contacts)
Insulation resistance, electrification time 30 s, temperature 25°C	10,000 MΩ min./100 V
Dielectric Withstanding Voltage (Sea Level) 500 micro amps max. charge/discharge	500 VDC
Filter type C	Capacitor
Filter symbol per DIN	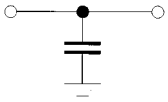

Filter designation	9	5	4	6	1	2	3
Capacitance, type at 1 KHz, 0,1 Vrms, 25°C	47000 pF	5000 pF	2000 pF	1500 pF	1000 pF	500 pF	250 pF
Frequency MHz	Attenuation db min.	Attenuation db min.	Attenuation db min.	Attenuation db min.	Attenuation db min.	Attenuation db min.	Attenuation db min.
5	30	11	6	3	—	—	—
10	37	16	10	7	5	2	1
100	50	35	27	23	20	16	14
1000	45	54	48	46	42	37	35
2000	—	64	60	—	60	60	60
5000	—	64	64	—	64	64	64

Attenuation per MIL-STD-220 at 25°C with no applied voltage or current

D*JK — 90° PC Tails — Standard Footprint .318♦ or .283 inch ♦♦

Plug

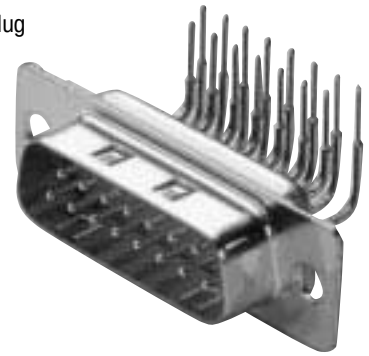

Reader's Resource
For contact cavity arrangements, see page 224.
For P.C. hole patterns, see page 272.
For panel cutouts, see page 221.
For hardware views (European), see page 227.

Part Numbers

Shell Size	Layout	Through Hole	Clinch Nut #4-40 UNC
DE	9	DEJK9P*-1U0N	DEJKE9P*-1U0N
DA	15	DAJK15P*-1U0N	DAJKE15P*-1U0N
DB	25	DBJK25P*-1U0N	DBJKE25P*-1U0N
DC	37	DCJK37P*-1U0N	DCJKE37P*-1U0N

* Insert filter designator. Example: DEJK9P4-1U0N (For 1000 pF Filter Capacitance)
Note: For performance class 1 add -A190. Example: DEJK9P1-1U0N-A190

Filter Designator*	Filter Capacitance
1	330 pF
2	470 pF
3	680 pF
4	1000 pF
5	1500 pF

For electrical data, see page 106.

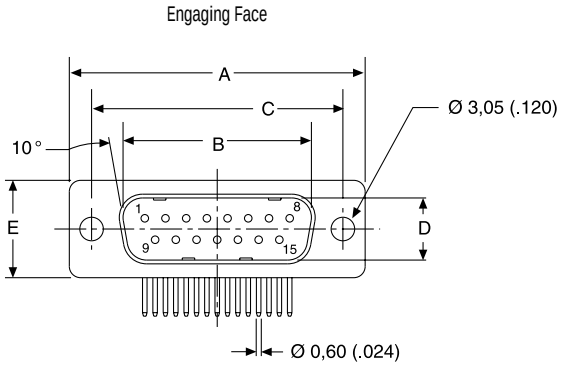

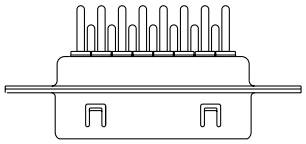

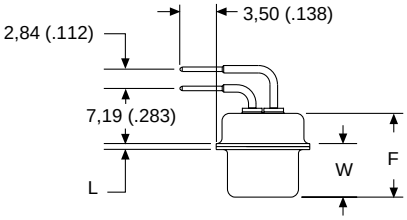

Dimensions

Shell Size	A ±0,38 (.015)	B ±0,13 (.005)	C ±0,13 (.005)	D ±0,13 (.005)	E ±0,38 (.015)	F ±0,25 (.010)	W ±0,37 (.015)	W ±0,41 (.016)	L ±0,25 (.010)
DE	30,81 (1.213)	16,92 (.666)	24,99 (.984)	8,36 (.329)	12,55 (.494)	10,72 (.422)	6,69 (.264)	—	0,76 (.030)
DA	39,14 (1.541)	25,25 (.994)	33,32 (1.312)	8,36 (.329)	12,55 (.494)	10,72 (.422)	6,69 (.264)	—	0,76 (.030)
DB	53,04 (2.088)	38,96 (1.534)	47,04 (1.852)	8,36 (.329)	12,55 (.494)	10,72 (.422)	—	6,84 (.269)	0,99 (.039)
DC	69,32 (2.729)	55,42 (2.182)	63,50 (2.500)	8,36 (.329)	12,55 (.494)	10,72 (.422)	—	6,84 (.269)	0,99 (.039)

♦ Connector footprint measured from the front shell.
♦♦ Connector footprint measured from the rear shell.

Dimensions are shown in mm (inch)
Dimensions subject to change

D*JK — 90° PC Tails — Standard Footprint .318♦ or .283 inch ♦♦

Receptacle

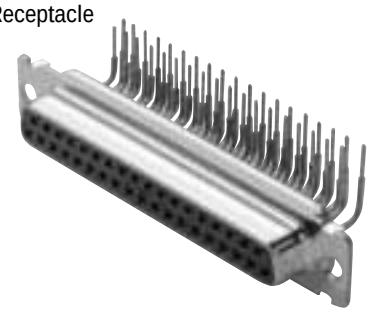

Reader's Resource

For contact cavity arrangements, see page 224.
For P.C. hole patterns, see page 272.
For panel cutouts, see page 221.
For hardware views (European), see page 227.

Part Numbers

Shell Size	Layout	Through Hole	Clinch Nut #4-40 UNC
DE	9	DEJK9S*-1U0N	DEJKE9S*-1U0N
DA	15	DAJK15S*-1U0N	DAJKE15S*-1U0N
DB	25	DBJK25S*-1U0N	DBJKE25S*-1U0N
DC	37	DCJK37S*-1U0N	DCJKE37S*-1U0N

* Insert filter designator. Example: DEJK9S4-1U0N (for 1000 pF Filter Capacitance)
Note: For performance class 1, add -A190. Example: DEJK9S1-1U0N-A190

Filter Designator*	Filter Capacitance
1	330 pF
2	470 pF
3	680 pF
4	1000 pF
5	1500 pF

For electrical data, see page 106.

Engaging Face

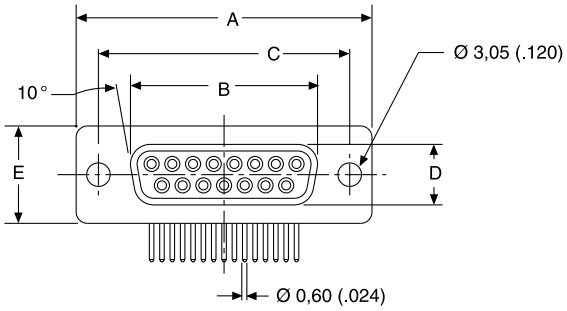

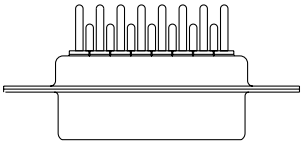

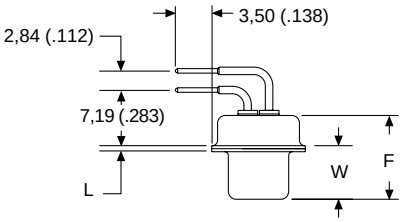

Dimensions

Shell Size	A ±0,38 (.015)	B ±0,13 (.005)	C ±0,13 (.005)	D ±0,13 (.005)	E ±0,38 (.015)	F ±0,25 (.010)	W ±0,38 (.015)	L ±0,25 (.010)
DE	30,81 (1.213)	16,33 (.643)	24,99 (.984)	7,90 (.311)	12,55 (.494)	10,90 (.429)	6,94 (.273)	0,76 (.030)
DA	39,14 (1.541)	24,66 (.971)	33,32 (1.312)	7,90 (.311)	12,55 (.494)	10,90 (.429)	6,94 (.273)	0,76 (.030)
DB	53,04 (2.088)	38,38 (1.511)	47,04 (1.852)	7,90 (.311)	12,55 (.494)	10,90 (.429)	6,94 (.273)	0,76 (.030)
DC	69,32 (2.729)	54,84 (2.159)	63,50 (2.500)	7,90 (.311)	12,55 (.494)	10,90 (.429)	6,94 (.273)	0,76 (.030)

♦ Connector footprint measured from the front shell.
♦ ♦ Connector footprint measured from the rear shell.

D*JK — 90° PC Tails — European Footprint 10,2♦ or 9,4 mm♦♦

Plug

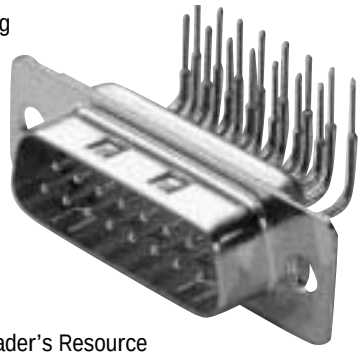

Reader's Resource

For contact cavity arrangements, see page 224.
For P.C. hole patterns, see page 273.
For panel cutouts, see page 221.
For hardware options (European), see page 227.

Part Numbers

Shell Size	Layout	Through Hole	Clinch Nut #4-40 UNC	Clinch Nut M3
DE	9	DEJK9P*-1A0N	DEJKE9P*-1A0N	DEJKX9P*-1A0N
DA	15	DAJK15P*-1A0N	DAJKE15P*-1A0N	DAJKX15P*-1A0N
DB	25	DBJK25P*-1A0N	DBJKE25P*-1A0N	DBJKX25P*-1A0N
DC	37	DCJK37P*-1A0N	DCJKE37P*-1A0N	DCJKX37P*-1A0N

* Insert filter designator. Example: DEJK9P4-1A0N (For 1000 pF Filter Capacitance)
Modifier: For performance class 1 add -A190. Example: DEJK9P1-1A0N-A190

Filter Designator*	Filter Capacitance
1	330 pF
2	470 pF
3	680 pF
4	1000 pF
5	1500 pF

For electrical data, see page 106.

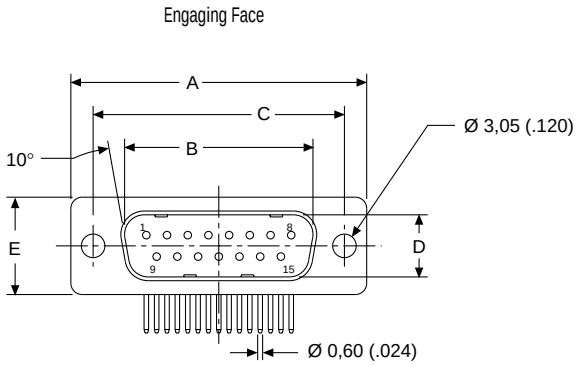

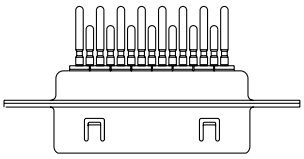

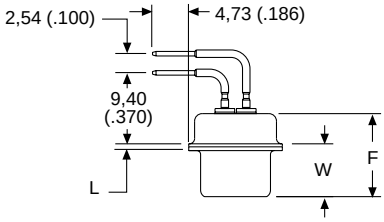

Dimensions

Shell Size	A ±0,38 (.015)	B ±0,13 (.005)	C ±0,13 (.005)	D ±0,13 (.005)	E ±0,38 (.015)	F ±0,25 (.010)	W ±0,37 (.015)	W ±0,41 (.016)	L ±0,25 (.010)
DE	30,81 (1.213)	16,92 (.666)	24,99 (.984)	8,36 (.329)	12,55 (.494)	10,72 (.422)	6,69 (.264)	—	0,76 (.030)
DA	39,14 (1.541)	25,25 (.994)	33,32 (1.312)	8,36 (.329)	12,55 (.494)	10,72 (.422)	6,69 (.264)	—	0,76 (.030)
DB	53,04 (2.088)	38,96 (1.534)	47,04 (1.852)	8,36 (.329)	12,55 (.494)	10,72 (.422)	—	6,84 (.269)	0,99 (.039)
DC	69,32 (2.729)	55,42 (2.182)	63,50 (2.500)	8,36 (.329)	12,55 (.494)	10,72 (.422)	—	6,84 (.269)	0,99 (.039)

♦ Connector footprint measured from the front shell.
♦♦ Connector footprint measured from the rear shell.

Dimensions are shown in mm (inch)
Dimensions subject to change

D*JK — 90° PC Tails — European Footprint 10,2♦ or 9,4 mm♦♦

Receptacle

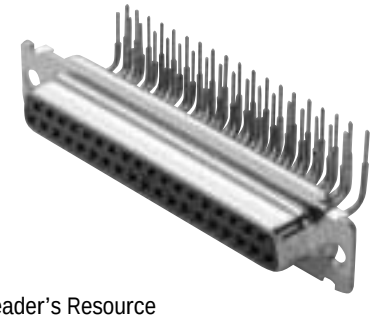

Reader's Resource

For contact cavity arrangements, see page 224.
For P.C. hole patterns, see page 273.
For panel cutouts, see page 221.
For hardware options (European), see page 227.

Part Numbers

Shell Size	Layout	Through Hole	Clinch Nut #4-40 UNC	Clinch Nut M3
DE	9	DEJK9S*-1A0N	DEJKE9S*-1A0N	DEJKX9S*-1A0N
DA	15	DAJK15S*-1A0N	DAJKE15S*-1A0N	DAJKX15S*-1A0N
DB	25	DBJK25S*-1A0N	DBJKE25S*-1A0N	DBJKX25S*-1A0N
DC	37	DCJK37S*-1A0N	DCJKE37S*-1A0N	DCJKX37S*-1A0N

* Insert filter designator. Example: DEJK9S4-1A0N (for 1000 pF Filter Capacitance)
Note: For performance class 1, add -A190. Example: DEJK9S1-1A0N-A190

Filter Designator*	Filter Capacitance
1	330 pF
2	470 pF
3	680 pF
4	1000 pF
5	1500 pF

For electrical data, see page 106.

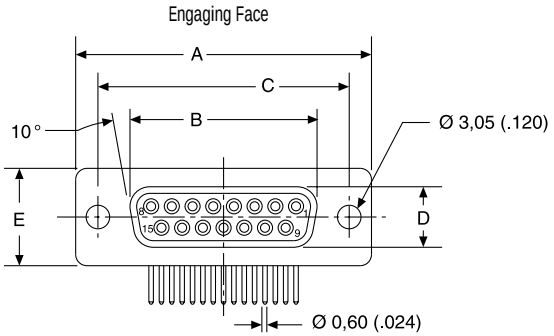

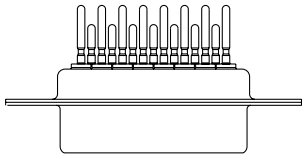

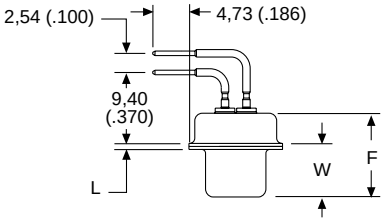

Dimensions

Shell Size	A ±0,38 (.015)	B ±0,13 (.005)	C ±0,13 (.005)	D ±0,13 (.005)	E ±0,38 (.015)	F ±0,25 (.010)	W ±0,38 (.015)	L ±0,25 (.010)
DE	30,81 (1.213)	16,33 (.643)	24,99 (.984)	7,90 (.311)	12,55 (.494)	10,90 (.429)	6,94 (.273)	0,76 (.030)
DA	39,14 (1.541)	24,66 (.971)	33,32 (1.312)	7,90 (.311)	12,55 (.494)	10,90 (.429)	6,94 (.273)	0,76 (.030)
DB	53,04 (2.088)	38,38 (1.511)	47,04 (1.852)	7,90 (.311)	12,55 (.494)	10,90 (.429)	6,94 (.273)	0,76 (.030)
DC	69,32 (2.729)	54,84 (2.159)	63,50 (2.500)	7,90 (.311)	12,55 (.494)	10,90 (.429)	6,94 (.273)	0,76 (.030)

♦ Connector footprint measured from the front shell.
♦♦ Connector footprint measured from the rear shell.

D*JK — 90° PC Tails and Metal Brackets — Standard Footprint .318♦ or .283 inch♦♦

Plug

Reader's Resource
For contact cavity arrangements, see page 224.
For P.C. hole patterns, see page 273.
For panel cutouts, see page 221.
For hardware views (European), see page 227.
For alternate bracket configuration (when connectors are supplied without boardlocks), see page 226.
For pushfit/boardlock configuration, see page 225.

Part Numbers

Shell Size	Layout	Bracket, #4-40 Nut	Bracket, #4-40 Nut, Boardlock
DE	9	DEJK9P*-1U7N	DEJK9P*-1U7N-146
DA	15	DAJK15P*-1U7N	DAJK15P*-1U7N-146
DB	25	DBJK25P*-1U7N	DBJK25P*-1U7N-146
DC	37	DCJK37P*-1U7N	DCJK37P*-1U7N-146

Insert filter designator *. Example: DEJK9P4-1U7N-146 (For 1000 pF Filter Capacitance)
Note: For performance class 1, add -A190. Example: DEJK9P4-1U7N-A190-146

Filter Designator*	Filter Capacitance
1	330 pF
2	470 pF
3	680 pF
4	1000 pF
5	1500 pF

For electrical data, see page 106.

Engaging Face

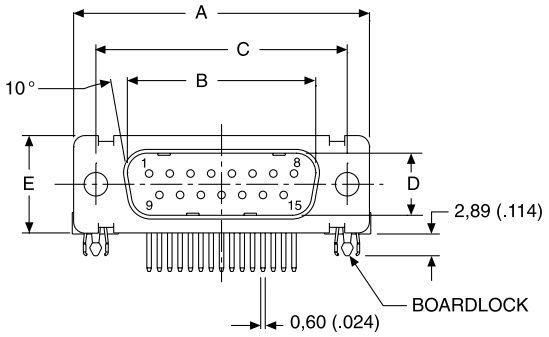

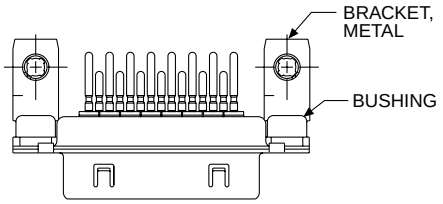

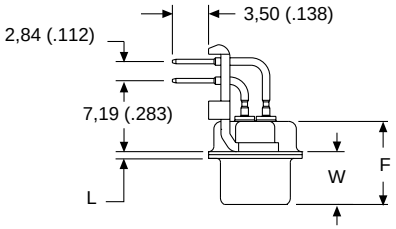

Boardlock removed for clarity

Dimensions

Shell Size	A ±0,38 (.015)	B ±0,13 (.005)	C ±0,13 (.005)	D ±0,13 (.005)	E ±0,38 (.015)	F ±0,25 (.010)	W ±0,368 (.0145)	W ±0,41 (.016)	L ±0,25 (.010)
DE	30,81 (1.213)	16,92 (.666)	24,99 (.984)	8,36 (.329)	12,55 (.494)	10,72 (.422)	6,693 (.2635)	—	0,76 (.030)
DA	39,14 (1.541)	25,25 (.994)	33,32 (1.312)	8,36 (.329)	12,55 (.494)	10,72 (.422)	6,693 (.2635)	—	0,76 (.030)
DB	53,04 (2.088)	38,96 (1.534)	47,04 (1.852)	8,36 (.329)	12,55 (.494)	10,82 (.426)	—	6,84 (.269)	0,99 (.039)
DC	69,32 (2.729)	55,42 (2.182)	63,50 (2.500)	8,36 (.329)	12,55 (.494)	10,82 (.426)	—	6,84 (.269)	0,99 (.039)

♦ Connector footprint measured from the front shell.
♦♦ Connector footprint measured from the rear shell.

Dimensions are shown in mm (inch)
Dimensions subject to change

D*JK — 90° PC Tails and Metal Brackets — Standard Footprint .318♦ or .283 inch♦♦

Receptacle

Reader's Resource
For contact cavity arrangements, see page 224.
For P.C. hole patterns, see page 273.
For panel cutouts, see page 221.
For hardware views (European), see page 227.
For alternate bracket configuration (when connectors are supplied without boardlocks), see page 226.
For pushfit/boardlock configuration, see page 225.

Part Numbers

Shell Size	Layout	Bracket, #4-40 Nut	Bracket, #4-40 Nut, Boardlock
DE	9	DEJK9S*-1U7N	DEJK9S*-1U7N-146
DA	15	DAJK15S*-1U7N	DAJK15S*-1U7N-146
DB	25	DBJK25S*-1U7N	DBJK25S*-1U7N-146
DC	37	DCJK37S*-1U7N	DCJK37S*-1U7N-146

Insert filter designator *. Example DEJK9S4-1U7N-146 (For 1000 pF Filter Capacitance)
Note: For performance class 1, add -A190. Example: DEJK9S4-1U7N-A190-146

Filter Designator*	Filter Capacitance
1	330 pF
2	470 pF
3	680 pF
4	1000 pF
5	1500 pF

For electrical data, see page 106.

Engaging Face

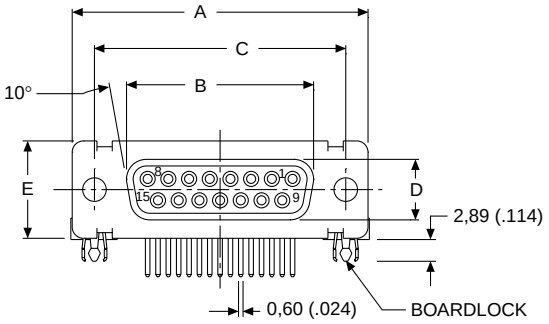

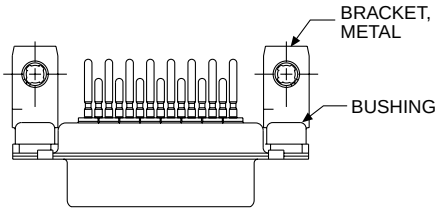

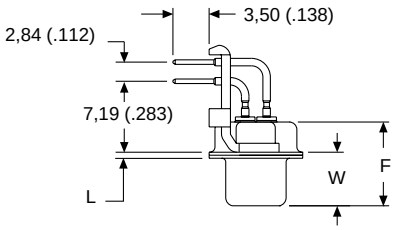

Boardlock removed for clarity

Dimensions

Shell Size	A ±0,38 (.015)	B ±0,13 (.005)	C ±0,13 (.005)	D ±0,13 (.005)	E ±0,38 (.015)	F ±0,25 (.010)	W ±0,38 (.015)	L ±0,25 (.010)
DE	30,81 (1.213)	16,33 (.643)	24,99 (.984)	7,90 (.311)	12,55 (.494)	10,90 (.429)	6,94 (.273)	0,76 (.030)
DA	39,14 (1.541)	24,66 (.971)	33,32 (1.312)	7,90 (.311)	12,55 (.494)	10,90 (.429)	6,94 (.273)	0,76 (.030)
DB	53,04 (2.088)	38,38 (1.511)	47,04 (1.852)	7,90 (.311)	12,55 (.494)	10,90 (.429)	6,94 (.273)	0,76 (.030)
DC	69,32 (2.729)	54,84 (2.159)	63,50 (2.500)	7,90 (.311)	12,55 (.494)	10,90 (.429)	6,94 (.273)	0,76 (.030)

♦ Connector footprint measured from the front shell.
♦♦ Connector footprint measured from the rear shell.

D*JK — 90° PC Tails and Metal Brackets — European Footprint 10,2♦ or 9,4 mm♦♦

Plug

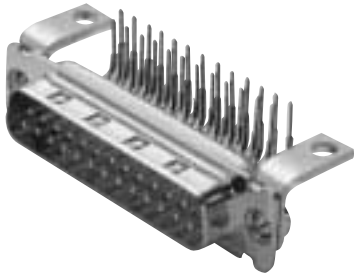

Reader's Resource

For contact cavity arrangements, see page 224.
For P.C. hole patterns, see page 273.
For panel cutouts, see page 221.
For hardware views (European), see page 227.
For alternate bracket configuration (when connectors are supplied without boardlocks), see page 226.
For pushfit/boardlock configuration, see page 225.

Part Numbers

Bushing with Through Hole	Captive Nut #4-40 UNC	Captive Nut M3	Post #4-40 UNC	Post M3
DEJK9P*-1AFN	DEJK9P*-1A7N	DEJK9P*-1A9N	DEJK9P*-1A8N	DEJK9P*-1AHN
DAJK15P*-1AFN	DAJK15P*-1A7N	DAJK15P*-1A9N	DAJK15P*-1A8N	DAJK15P*-1AHN
DBJK25P*-1AFN	DBJK25P*-1A7N	DBJK25P*-1A9N	DBJK25P*-1A8N	DBJK25P*-1AHN
DCJK37P*-1AFN	DCJK37P*-1A7N	DCJK37P*-1A9N	DCJK37P*-1A8N	DCJK37P*-1AHN

* Insert filter designator. Example: DEJK9P4-1A7N (For 1000 pF capacitance)
Notes: For performance class 1 add -A190. Example: DEJK9P1-1AFN-A190
For pushfit/boardlocks add -146. Example: DEJK9P1-1AFN-A190-146

Filter Designator*	Filter Capacitance
1	330 pF
2	470 pF
3	680 pF
4	1000 pF
5	1500 pF

For electrical data, see page 106.

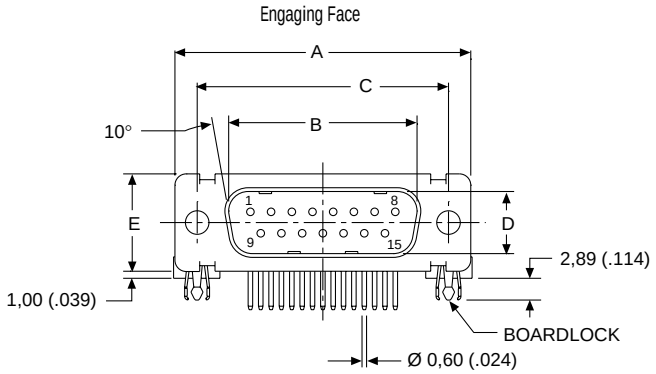

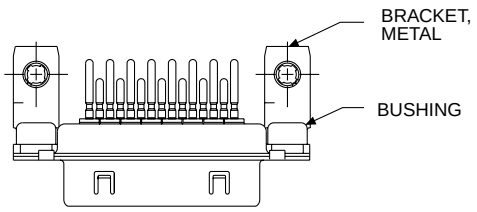

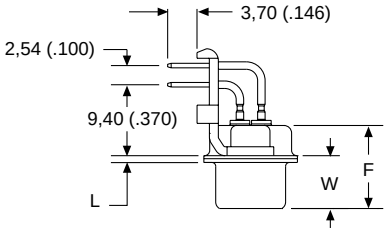

Boardlock removed for clarity

Dimensions

Shell Size	A ±0,38 (.015)	B ±0,13 (.005)	C ±0,13 (.005)	D ±0,13 (.005)	E ±0,38 (.015)	F ±0,25 (.010)	W ±0,368 (.0145)	W ±0,41 (.016)	L ±0,25 (.010)
DE	30,81 (1.213)	16,92 (.666)	24,99 (.984)	8,36 (.329)	12,55 (.494)	10,72 (.422)	6,693 (.2635)	—	0,76 (.030)
DA	39,14 (1.541)	25,25 (.994)	33,32 (1.312)	8,36 (.329)	12,55 (.494)	10,72 (.422)	6,693 (.2635)	—	0,76 (.030)
DB	53,04 (2.088)	38,96 (1.534)	47,04 (1.852)	8,36 (.329)	12,55 (.494)	10,82 (.426)	—	6,84 (.269)	0,99 (.039)
DC	69,32 (2.729)	55,42 (2.182)	63,50 (2.500)	8,36 (.329)	12,55 (.494)	10,82 (.426)	—	6,84 (.269)	0,99 (.039)

♦ Connector footprint measured from the front shell.
♦♦ Connector footprint measured from the rear shell.

Dimensions are shown in mm (inch)
Dimensions subject to change

D*JK — 90° PC Tails and Metal Brackets — European Footprint 10,2♦ or 9,4 mm♦♦

Receptacle

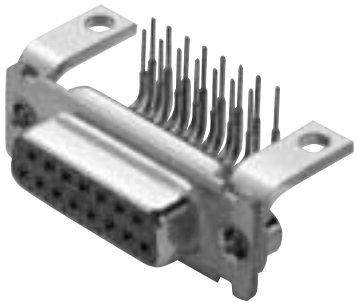

Reader's Resource

For contact cavity arrangements, see page 224.
For P.C. hole patterns, see page 273.
For panel cutouts, see page 221.
For hardware views (European), see page 227.
For alternate bracket configuration (when connectors are supplied without boardlocks), see page 226.
For pushfit/boardlock configuration, see page 225.

Part Numbers

Bushing with Through Hole	Captive Nut #4-40 UNC	Captive Nut M3	Post #4-40 UNC	Post M3
DEJK9S*-1AFN	DEJK9S*-1A7N	DEJK9S*-1A9N	DEJK9S*-1A8N	DEJK9S*-1AHN
DAJK15S*-1AFN	DAJK15S*-1A7N	DAJK15S*-1A9N	DAJK15S*-1A8N	DAJK15S*-1AHN
DBJK25S*-1AFN	DBJK25S*-1A7N	DBJK25S*-1A9N	DBJK25S*-1A8N	DBJK25S*-1AHN
DCJK37S*-1AFN	DCJK37S*-1A7N	DCJK37S*-1A9N	DCJK37S*-1A8N	DCJK37S*-1AHN

* Insert filter designator. Example: DEJK9S4-1A7N (For 1000 pF capacitance)
Notes: For performance class 1 add -A190. Example: DEJK9S1-1AFN-A190
For pushfit/boardlocks add -146. Example: DEJK9S1-1AFN-A190-146

Filter Designator*	Filter Capacitance
1	330 pF
2	470 pF
3	680 pF
4	1000 pF
5	1500 pF

For electrical data, see page 106.

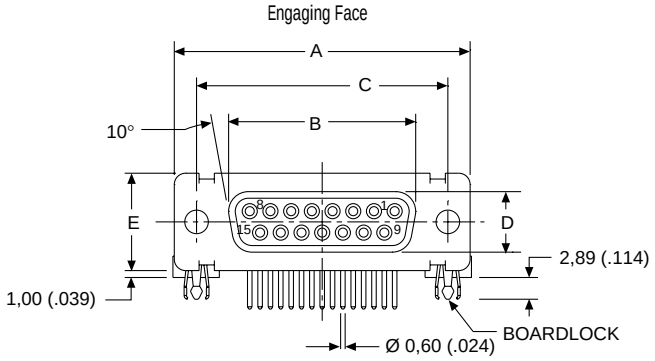

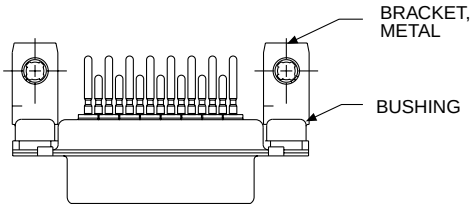

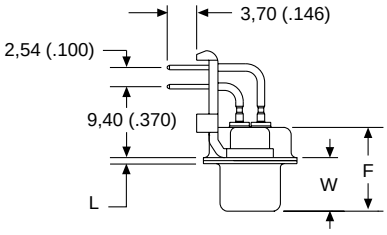

Boardlock removed for clarity

Dimensions

Shell Size	A ±0,38 (.015)	B ±0,13 (.005)	C ±0,13 (.005)	D ±0,13 (.005)	E ±0,38 (.015)	F ±0,25 (.010)	W ±0,38 (.015)	K ±0,318 (.0125)	L ±0,25 (.010)
DE	30,81 (1.213)	16,33 (.643)	24,99 (.984)	7,90 (.311)	12,55 (.494)	10,90 (.429)	6,94 (.273)	1,206 (.0475)	0,76 (.030)
DA	39,14 (1.541)	24,66 (.971)	33,32 (1.312)	7,90 (.311)	12,55 (.494)	10,90 (.429)	6,94 (.273)	1,206 (.0475)	0,76 (.030)
DB	53,04 (2.088)	38,38 (1.511)	47,04 (1.852)	7,90 (.311)	12,55 (.494)	10,90 (.429)	6,94 (.273)	1,206 (.0475)	0,76 (.030)
DC	69,32 (2.729)	54,84 (2.159)	63,50 (2.500)	7,90 (.311)	12,55 (.494)	10,90 (.429)	6,94 (.273)	1,206 (.0475)	0,76 (.030)

♦ Connector footprint measured from the front shell.
♦♦ Connector footprint measured from the rear shell.

D*JK — 90° PC Tails & Plastic Brackets with Grounding Straps — European Footprint 10,2♦ or 9,4 mm♦♦

Plug

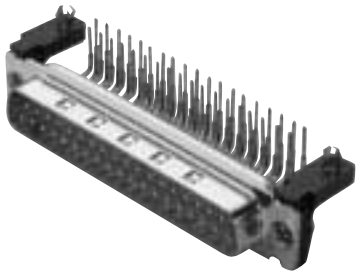

Reader's Resource

For contact cavity arrangements, see page 224.
For P.C. hole patterns, see page 273.
For panel cutouts, see page 221.
For hardware views (European), see page 227.
For pushfit/boardlock configuration, see page 225.

Part Numbers

Bushing with Through Hole	Captive Nut #4-40 UNC	Captive Nut M3	Post #4-40 UNC	Post M3
DEJK9P*-1ADN	DEJK9P*-1AWN	DEJK9P*-1AVN	DEJK9P*-1AJN	DEJK9P*-1AGN
DAJK15P*-1ADN	DAJK15P*-1AWN	DAJK15P*-1AVN	DAJK15P*-1AJN	DAJK15P*-1AGN
DBJK25P*-1ADN	DBJK25P*-1AWN	DBJK25P*-1AVN	DBJK25P*-1AJN	DBJK25P*-1AGN
DCJK37P*-1ADN	DCJK37P*-1AWN	DCJK37P*-1AVN	DCJK37P*-1AJN	DCJK37P*-1AGN

* Insert filter designator. Example: DEJK9P4-1AWN (For 1000 pF capacitance)
Notes: For performance class 1 add -A190. Example: DEJK9P1-1ADN-A190
For pushfit/boardlocks add -146. Example: DEJK9P1-1ADN-A190-146

Filter Designator*	Filter Capacitance
1	330 pF
2	470 pF
3	680 pF
4	1000 pF
5	1500 pF

For electrical data, see page 106.

Engaging Face

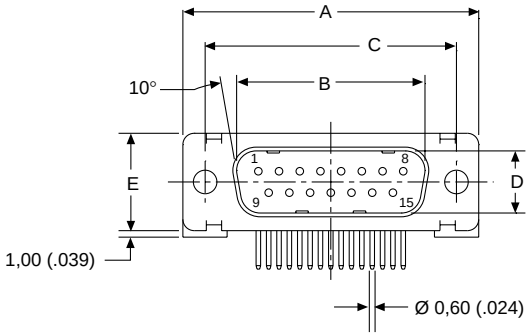

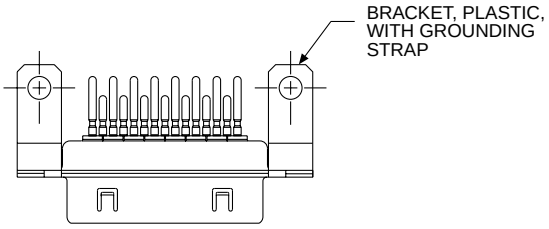

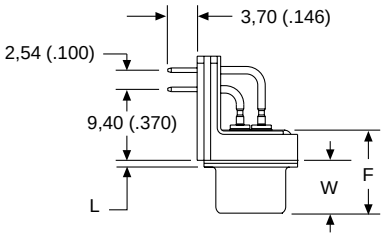

Dimensions

Shell Size	A ±0,38 (.015)	B ±0,13 (.005)	C ±0,13 (.005)	D ±0,13 (.005)	E ±0,38 (.015)	F ±0,25 (.010)	W ±0,368 (.0145)	W ±0,41 (.016)	L ±0,25 (.010)
DE	30,81 (1.213)	16,92 (.666)	24,99 (.984)	8,36 (.329)	12,55 (.494)	10,72 (.422)	6,693 (.2635)	—	0,76 (.030)
DA	39,14 (1.541)	25,25 (.994)	33,32 (1.312)	8,36 (.329)	12,55 (.494)	10,72 (.422)	6,693 (.2635)	—	0,76 (.030)
DB	53,04 (2.088)	38,96 (1.534)	47,04 (1.852)	8,36 (.329)	12,55 (.494)	10,82 (.426)	—	6,84 (.269)	0,99 (.039)
DC	69,32 (2.729)	55,42 (2.182)	63,50 (2.500)	8,36 (.329)	12,55 (.494)	10,82 (.426)	—	6,84 (.269)	0,99 (.039)

♦ Connector footprint measured from the front shell.
♦♦ Connector footprint measured from the rear shell.

Dimensions are shown in mm (inch)
Dimensions subject to change

D*JK — 90° PC Tails & Plastic Brackets with Grounding Straps — European Footprint 10,2♦ or 9,4 mm♦♦

Receptacle

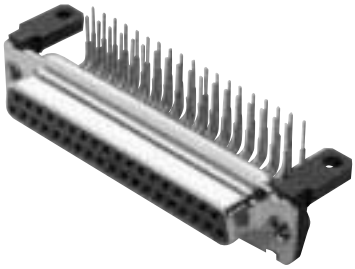

Part Numbers

Bushing with Through Hole	Captive Nut #4-40 UNC	Captive Nut M3	Post #4-40 UNC	Post M3
DEJK9S*-1ADN	DEJK9S*-1AWN	DEJK9S*-1AVN	DEJK9S*-1AJN	DEJK9S*-1AGN
DAJK15S*-1ADN	DAJK15S*-1AWN	DAJK15S*-1AVN	DAJK15S*-1AJN	DAJK15S*-1AGN
DBJK25S*-1ADN	DBJK25S*-1AWN	DBJK25S*-1AVN	DBJK25S*-1AJN	DBJK25S*-1AGN
DCJK37S*-1ADN	DCJK37S*-1AWN	DCJK37S*-1AVN	DCJK37S*-1AJN	DCJK37S*-1AGN

* Insert filter designator. Example: DEJK9S4-1AWN (For 1000 pF capacitance)
Notes: For performance class 1 add -A190. Example: DEJKS1-1ADN-A190
For pushfit/boardlocks add -146. Example: DEJK9P1-1ADN-A190-146

Reader's Resource
For contact cavity arrangements, see page 224.
For P.C. hole patterns, see page 273.
For panel cutouts, see page 221.
For hardware views (European), see page 227.
For pushfit/boardlock configuration, see page 225.

Filter Desginator*	Filter Capacitance
1	330 pF
2	470 pF
3	680 pF
4	1000 pF
5	1500 pF

For electrical data, see page 106.

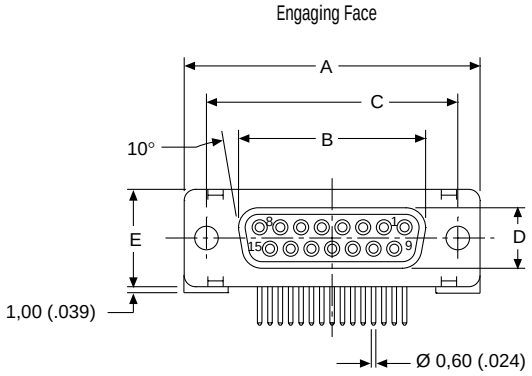

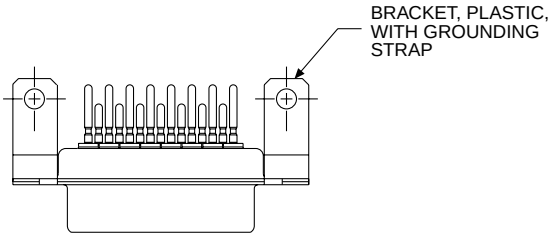

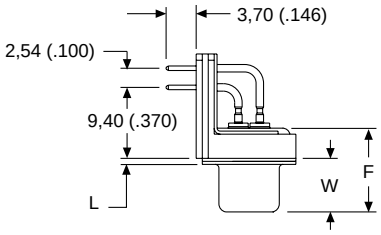

Dimensions

Shell Size	A ±0,38 (.015)	B ±0,13 (.005)	C ±0,13 (.005)	D ±0,13 (.005)	E ±0,38 (.015)	F ±0,25 (.010)	W ±0,38 (.015)	L ±0,25 (.010)
DE	30,81 (1.213)	16,33 (.643)	24,99 (.984)	7,90 (.311)	12,55 (.494)	10,90 (.429)	6,94 (.273)	0,76 (.030)
DA	39,14 (1.541)	24,66 (.971)	33,32 (1.312)	7,90 (.311)	12,55 (.494)	10,90 (.429)	6,94 (.273)	0,76 (.030)
DB	53,04 (2.088)	38,38 (1.511)	47,04 (1.852)	7,90 (.311)	12,55 (.494)	10,90 (.429)	6,94 (.273)	0,76 (.030)
DC	69,32 (2.729)	54,84 (2.159)	63,50 (2.500)	7,90 (.311)	12,55 (.494)	10,90 (.429)	6,94 (.273)	0,76 (.030)

♦ Connector footprint measured from the front shell.
♦♦ Connector footprint measured from the rear shell.

D*JK — 90° PC Tails & Plastic Brackets — European Footprint 10,2♦ or 9,4 mm♦♦

Plug

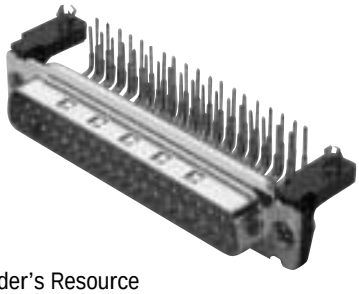

Reader's Resource

For contact cavity arrangements, see page 224.
For P.C. hole patterns, see page 273.
For panel cutouts, see page 221.
For hardware views (European), see page 227.
For pushfit/boardlock configuration, see page 225.

Part Numbers

Bushing with Through Hole	Captive Nut #4-40 UNC	Captive Nut M3	Post #4-40 UNC	Post M3
DEJK9P*-1A5N	DEJK9P*-1AUN	DEJK9P*-1ATN	DEJK9P*-1A6N	DEJK9P*-1APN
DAJK15P*-1A5N	DAJK15P*-1AUN	DAJK15P*-1ATN	DAJK15P*-1A6N	DAJK15P*-1APN
DBJK25P*-1A5N	DBJK25P*-1AUN	DBJK25P*-1ATN	DBJK25P*-1A6N	DBJK25P*-1APN
DCJK37P*-1A5N	DCJK37P*-1AUN	DCJK37P*-1ATN	DCJK37P*-1A6N	DCJK37P*-1APN

* Insert filter designator. Example: DEJK9P4-1A5N (For 1000 pF filter capacitance)
Notes: For performance class 1 add -A190. Example: DEJK9P1-1A5N-A190
For pushfit/boardlocks add-146. Example: DEJK9P1-1A5N-A190-146

Filter Designator*	Filter Capacitance
1	330 pF
2	470 pF
3	680 pF
4	1000 pF
5	1500 pF

For electrical data, see page 106.

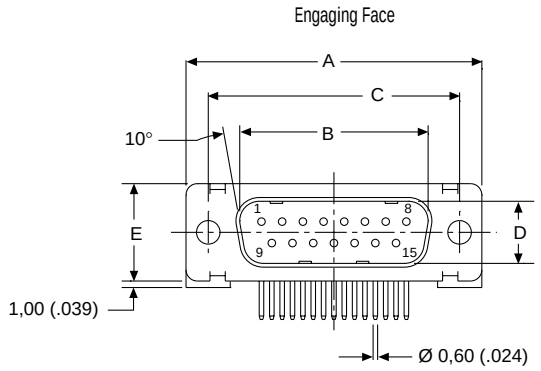

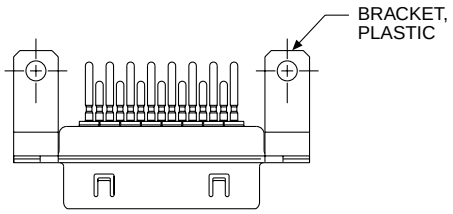

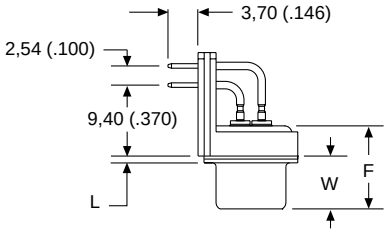

Dimensions

Shell Size	A ±0,38 (.015)	B ±0,13 (.005)	C ±0,13 (.005)	D ±0.13 (.005)	E ±0,38 (.015)	F ±0,25 (.010)	W ±0,37 (.015)	W ±0,41 (.016)	L ±0,25 (.010)
DE	30,81 (1.213)	16,92 (.666)	24,99 (.984)	8,36 (.329)	12,55 (.494)	10,72 (.422)	6,69 (.264)	—	0,76 (.030)
DA	39,14 (1.541)	25,25 (.994)	33,32 (1.312)	8,36 (.329)	12,55 (.494)	10,72 (.422)	6,69 (.264)	—	0,76 (.030)
DB	53,04 (2.088)	38,96 (1.534)	47,04 (1.852)	8,36 (.329)	12,55 (.494)	10,82 (.426)	—	6,84 (.269)	0,99 (.039)
DC	69,32 (2.729)	55,42 (2.182)	63,50 (2.500)	8,36 (.329)	12,55 (.494)	10,82 (.426)	—	6,84 (.269)	0,99 (.039)

♦ Connector footprint measured from the front shell.
♦♦ Connector footprint measured from the rear shell.

Dimensions are shown in mm (inch)
Dimensions subject to change

D*JK — 90° PC Tails and Plastic Brackets — European Footprint 10,2♦ or 9,4 mm♦♦

Receptacle

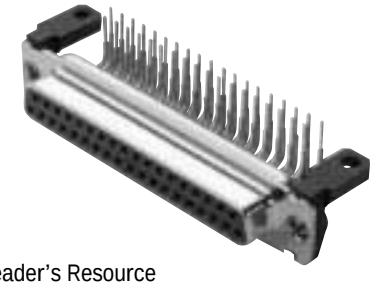

Reader's Resource

For contact cavity arrangements, see page 224.
For P.C. hole patterns, see page 273.
For panel cutouts, see page 221.
For hardware views (European), see page 227.
For pushfit/boardlock configuration, see page 225.

Part Numbers

Bushing with Through Hole	Captive Nut #4-40 UNC	Captive Nut M3	Post #4-40 UNC	Post M3
DEJK9S*-1A5N	DEJK9S*-1AUN	DEJK9S*-1ATN	DEJK9S*-1A6N	DEJK9S*-1APN
DAJK15S*-1A5N	DAJK15S*-1AUN	DAJK15S*-1ATN	DAJK15S*-1A6N	DAJK15S*-1APN
DBJK25S*-1A5N	DBJK25S*-1AUN	DBJK25S*-1ATN	DBJK25S*-1A6N	DBJK25S*-1APN
DCJK37S*-1A5N	DCJK37S*-1AUN	DCJK37S*-1ATN	DCJK37S*-1A6N	DCJK37S*-1APN

* Insert filter designator. Example: DEJK9S4-1A5N (for 1000 pF filter capacitance)
Notes: For performance class 1 add -A190. Example: DEJK9S1-1A5N-A190
For pushfit/boardlocks add -146. Example: DEJK9S1-1A5N-A190-146

Filter Designator*	Filter Capacitance
1	330 pF
2	470 pF
3	680 pF
4	1000 pF
5	1500 pF

For electrical data, see page 106.

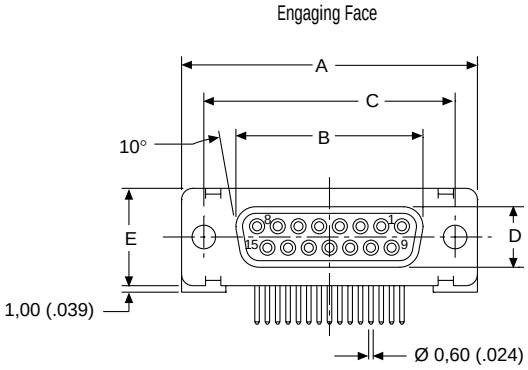

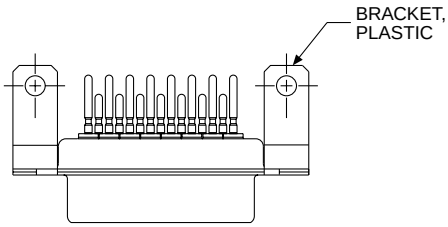

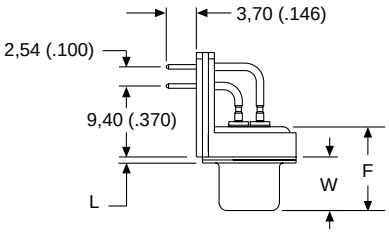

Dimensions

Shell Size	A ±0,38 (.015)	B ±0,13 (.005)	C ±0,13 (.005)	D ±0,13 (.005)	E ±0,38 (.015)	F ±0,25 (.010)	W ±0,38 (.015)	L ±0,25 (.010)
DE	30,81 (1.213)	16,33 (.643)	24,99 (.984)	7,90 (.311)	12,55 (.494)	10,90 (.429)	6,94 (.273)	0,76 (.030)
DA	39,14 (1.541)	24,66 (.971)	33,32 (1.312)	7,90 (.311)	12,55 (.494)	10,90 (.429)	6,94 (.273)	0,76 (.030)
DB	53,04 (2.088)	38,38 (1.511)	47,04 (1.852)	7,90 (.311)	12,55 (.494)	10,90 (.429)	6,94 (.273)	0,76 (.030)
DC	69,32 (2.729)	54,84 (2.159)	63,50 (2.500)	7,90 (.311)	12,55 (.494)	10,90 (.429)	6,94 (.273)	0,76 (.030)

♦ Connector footprint measured from the front shell.
♦♦ Connector footprint measured from the rear shell.

D*JK — Straight P.C. Tails

Plug

Reader's Resource
For contact cavity arrangements, see page 224.
For P.C. hole patterns, see page 274.
For panel cutouts, see page 221.
For Hardware views (European), see page 227.
For pushfit/boardlock configuration, see page 225.

Part Numbers

Shell Size	Layout	Through Hole	Clinch Nut #4-40 UNC	Clinch Nut M3	Pushfit/Boardlock #4-40 UNC	Pushfit/Boardlock M3
DE	9	DEJK9P*-OL4	DEJKE9P*-OL4	DEJKX9P*-OL4	DEJKE9P*-OL4-146	DEJKX9P*-OL4-146
DA	15	DAJK15P*-OL4	DAJKE15P*-OL4	DAJKX15P*-OL4	DAJKE15P*-OL4-146	DAJKX15P*-OL4-146
DB	25	DBJK25P*-OL4	DBJKE25P*-OL4	DBJKX25P*-OL4	DBJKE25P*-OL4-146	DBJKX25P*-OL4-146
DC	37	DCJK37P*-OL4	DCJKE37P*-OL4	DCJKX37P*-OL4	DCJKE37P*-OL4-146	DCJKX37P*-OL4-146
DD	50	DDJK50P*-OL4	DDJKE50P*-OL4	DDJKX50P*-OL4	DDJKE50P*-OL4-146	DDJKX50P*-OL4-146

* Insert filter designator. Example: DEJK9P4-0L4 (for 1000 pF filter capacitance)
Note: For performance class 1 add -A190. Example: DEJK9P1-0L4-A190

Filter Designator*	Filter Capacitance
1	330 pF
2	470 pF
3	680 pF
4	1000 pF
5	1500 pF

For electrical data, see page 106.

Engaging Face

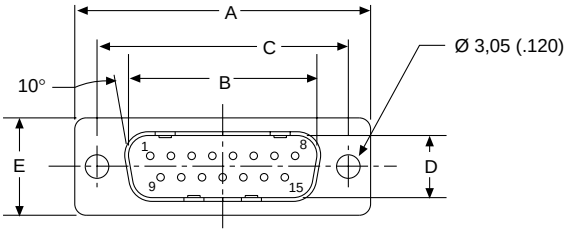

DD Configuration

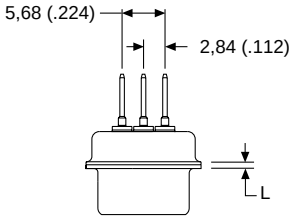

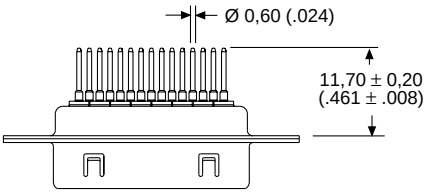

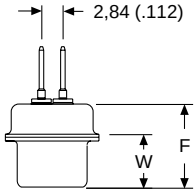

Dimensions

Shell Size	A ±0,38 (.015)	B ±0,13 (.005)	C ±0,13 (.005)	D ±0,13 (.005)	E ±0,38 (.015)	F ±0,25 (.010)	W ±0,368 (.0145)	W ±0,41 (.016)	L ±0,25 (.010)
DE	30,81 (1.213)	16,92 (.666)	24,99 (.984)	8,36 (.329)	12,55 (.494)	10,72 (.422)	6,693 (.2635)	—	0,76 (.030)
DA	39,14 (1.541)	25,25 (.994)	33,32 (1.312)	8,36 (.329)	12,55 (.494)	10,72 (.422)	6,693 (.2635)	—	0,76 (.030)
DB	53,04 (2.088)	38,96 (1.534)	47,04 (1.852)	8,36 (.329)	12,55 (.494)	10,82 (.426)	—	6,84 (.269)	0,99 (.039)
DC	69,32 (2.729)	55,42 (2.182)	63,50 (2.500)	8,36 (.329)	12,55 (.494)	10,82 (.426)	—	6,84 (.269)	0,99 (.039)
DD	66,93 (2.635)	52,81 (2.079)	61,11 (2.406)	11,07 (.439)	15,37 (.607)	10,82 (.426)	—	6,84 (.269)	0,99 (.039)

Dimensions are shown in mm (inch)
Dimensions subject to change

D*JK — Straight P.C. Tails

Receptacle

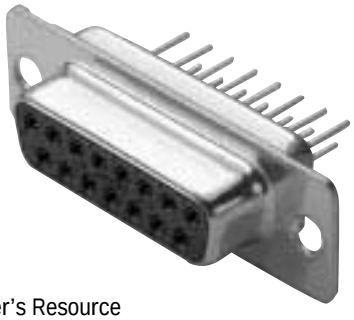

Reader's Resource

For contact cavity arrangements, see page 224.
For P.C. hole patterns, see page 274.
For panel cutouts, see page 221.
For Hardware views (European), see page 227.
For pushfit/boardlock configuration, see page 225.

Part Numbers

Shell Size	Layout	Through Hole	Clinch Nut #4-40 UNC	Clinch Nut M3	Pushfit/Boardlock #4-40 UNC	Pushfit/Boardlock M3
DE	9	DEJK9S*-OL4	DEJKE9S*-OL4	DEJKX9S*-OL4	DEJKE9S*-OL4-146	DEJKX9S*-OL4-146
DA	15	DAJK15S*-OL4	DAJKE15S*-OL4	DAJKX15S*-OL4	DAJKE15S*-OL4-146	DAJKX15S*-OL4-146
DB	25	DBJK25S*-OL4	DBJKE25S*-OL4	DBJKX25S*-OL4	DBJKE25S*-OL4-146	DBJKX25S*-OL4-146
DC	37	DCJK37S*-OL4	DCJKE37S*-OL4	DCJKX37S*-OL4	DCJKE37S*-OL4-146	DCJKX37S*-OL4-146

* Insert filter designator. Example: DEJK9S4-OL4 (for 1000 pF filter capacitance)
Note: For performance class 1 add -A190. Example: DEJK9S1-OL4-A190

Filter Designator*	Filter Capacitance
1	330 pF
2	470 pF
3	680 pF
4	1000 pF
5	1500 pF

For electrical data, see page 106.

Engaging Face

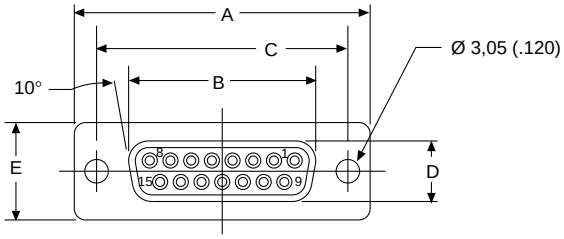

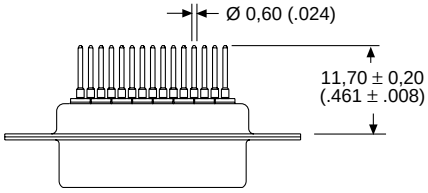

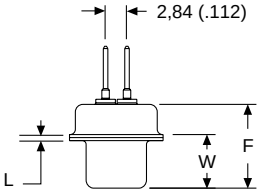

Dimensions

Shell Size	A ±0,38 (.015)	B ±0,13 (.005)	C ±0,13 (.005)	D ±0,13 (.005)	E ±0,38 (.015)	F ±0,25 (.010)	W ±0,38 (.015)	L ±0,25 (.010)
DE	30,81 (1.213)	16,33 (.643)	24,99 (.984)	7,90 (.311)	12,55 (.494)	10,90 (.429)	6,94 (.273)	0,76 (.030)
DA	39,14 (1.541)	24,66 (.971)	33,32 (1.312)	7,90 (.311)	12,55 (.494)	10,90 (.429)	6,94 (.273)	0,76 (.030)
DB	53,04 (2.088)	38,38 (1.511)	47,04 (1.852)	7,90 (.311)	12,55 (.494)	10,90 (.429)	6,94 (.273)	0,76 (.030)
DC	69,32 (2.729)	54,84 (2.159)	63,50 (2.500)	7,90 (.311)	12,55 (.494)	10,90 (.429)	6,94 (.273)	0,76 (.030)

D*JT — Solder Cup

Plug

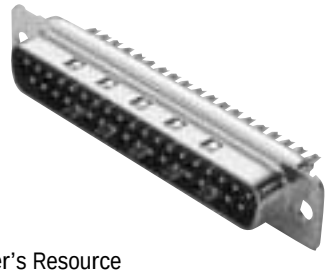

Reader's Resource
For contact cavity arrangements, see page 224.
For panel cutouts, see page 221.
For hardware views (European), see page 227.

Part Numbers

Shell Size	Layout	Through Hole	Clinch Nut #4-40 UNC	Clinch Nut M3
DE	9	DEJT9P*	DEJTE9P*	DEJTX9P*
DA	15	DAJT15P*	DAJTE15P*	DAJTX15P*
DB	25	DBJT25P*	DBJTE25P*	DBJTX25P*
DC	37	DCJT37P*	DCJTE37P*	DCJTX37P*

* Insert filter designator. Example: DCJT37P4 (for 2000 pF filter capacitance)
Note: For performance class 1 add -A190. Example: DCJT37P1-A190

Filter Designator*	Filter Capacitance
1	1000 pF
2	500 pF
3	250 pF
4	2000 pF
5	5000 pF

For electrical data, see page 107.

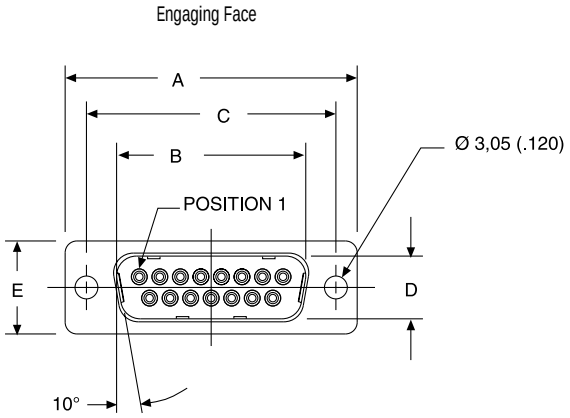

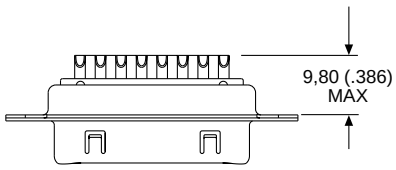

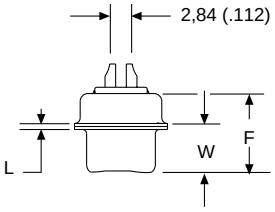

Dimensions

Shell Size	A ±0,38 (.015)	B ±0,13 (.005)	C ±0,13 (.005)	D ±0.13 (.005)	E ±0,38 (.015)	F ±0,25 (.010)	W ±0,37 (.015)	W ±0,41 (.016)	L ±0,25 (.010)
DE	30,81 (1.213)	16,92 (.666)	24,99 (.984)	8,36 (.329)	12,55 (.494)	10,72 (.422)	6,69 (.264)	—	0,76 (.030)
DA	39,14 (1.541)	25,25 (.994)	33,32 (1.312)	8,36 (.329)	12,55 (.494)	10,72 (.422)	6,69 (.264)	—	0,76 (.030)
DB	53,04 (2.088)	38,96 (1.534)	47,04 (1.852)	8,36 (.329)	12,55 (.494)	10,82 (.426)	—	6,84 (.269)	0,99 (.039)
DC	69,32 (2.729)	55,42 (2.182)	63,50 (2.500)	8,36 (.329)	12,55 (.494)	10,82 (.426)	—	6,84 (.269)	0,99 (.039)

Dimensions are shown in mm (inch)
Dimensions subject to change

D*JT — Solder Cup

Receptacle

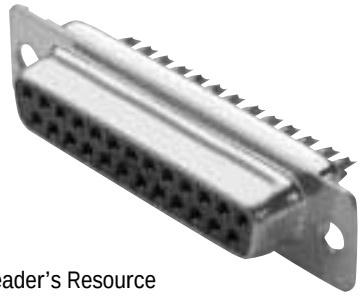

Reader's Resource
For contact cavity arrangements, see page 224.
For panel cutouts, see page 221.
For hardware views (European), see page 227.

Part Numbers

Shell Size	Layout	Through Hole	Clinch Nut #4-40 UNC	Clinch Nut M3
DE	9	DEJT9S*	DEJTE9S*	DEJTX9S*
DA	15	DAJT15S*	DAJTE15S*	DAJTX15S*
DB	25	DBJT25S*	DBJTE25S*	DBJTX25S*
DC	37	DCJT37S*	DCJTE37S*	DCJTX37S*

* Insert filter designator. Example: DEJT9S4 (for 2000 pF filter capacitance)
Note: For performance class 1 add -A190. Example: DEJT9S1-A190

Filter Designator*	Filter Capacitance
1	1000 pF
2	500 pF
3	250 pF
4	2000 pF
5	5000 pF

For electrical data, see page 107.

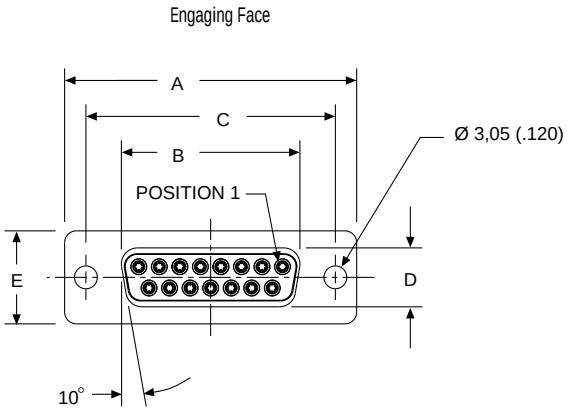

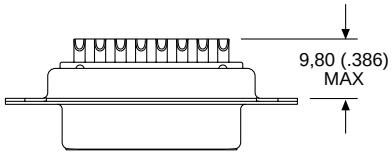

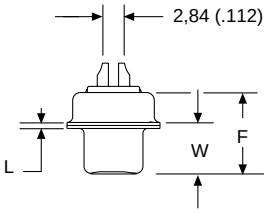

Dimensions

Shell Size	A ±0,38 (.015)	B ±0,13 (.005)	C ±0,13 (.005)	D ±0,13 (.005)	E ±0,38 (.015)	F ±0,25 (.010)	W ±0,38 (.015)	L ±0,25 (.010)
DE	30,81 (1.213)	16,33 (.643)	24,99 (.984)	7,90 (.311)	12,55 (.494)	10,90 (.429)	6,94 (.273)	0,76 (.030)
DA	39,14 (1.541)	24,66 (.971)	33,32 (1.312)	7,90 (.311)	12,55 (.494)	10,90 (.429)	6,94 (.273)	0,76 (.030)
DB	53,04 (2.088)	38,38 (1.511)	47,04 (1.852)	7,90 (.311)	12,55 (.494)	10,90 (.429)	6,94 (.273)	0,76 (.030)
DC	69,32 (2.729)	54,84 (2.159)	63,50 (2.500)	7,90 (.311)	12,55 (.494)	10,90 (.429)	6,94 (.273)	0,76 (.030)

D*JT Combo — High Power 90°

Plug

Reader's Resource
For contact cavity arrangements, see page 222.
For P.C. hole patterns, see page 250.
For panel cutouts, see page 221.
For hardware views (European), see page 227.

Part Numbers

Filter Capacitance	Through Hole	Clinch Nut #4-40 UNC	Clinch Nut M3
1000 pF	DAJT3W3P1-1A0N	DAJTE3W3P1-1A0N	DAJTX3W3P1-1A0N
1500 pF	DAJT3W3P6-1A0N	DAJTE3W3P6-1A0N	DAJTX3W3P6-1A0N
5000 pF	DAJT3W3P5-1A0N	DAJTE3W3P5-1A0N	DAJTX3W3P5-1A0N
47000 pF	DAJT3W3P9-1A0N	DAJTE3W3P9-1A0N	DAJTX3W3P9-1A0N

Note: For performance class 1 add -A190. Example: DAJT3WK3P6-1A0N-A190

Part Numbers — Keyed Configuration

Filter Capacitance	Through Hole	Clinch Nut #4-40 UNC	Clinch Nut M3
1000 pF	DAJT3WK3P1-1A0N	DAJTE3WK3P1-1A0N	DAJTX3WK3P1-1A0N
1500 pF	DAJT3WK3P6-1A0N	DAJTE3WK3P6-1A0N	DAJTX3WK3P6-1A0N
5000 pF	DAJT3WK3P5-1A0N	DAJTE3WK3P5-1A0N	DAJTX3WK3P5-1A0N
47000 pF	DAJT3WK3P9-1A0N	DAJTE3WK3P9-1A0N	DAJTX3WK3P9-1A0N

Note: For performance class 1 add -A190. Example: DAJT3WK3P6-1A0N-A190
For electrical data, see page 107.

Engaging Face

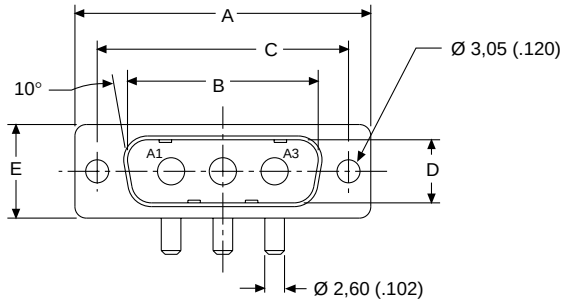

Keyed Configuration

Engaging Face

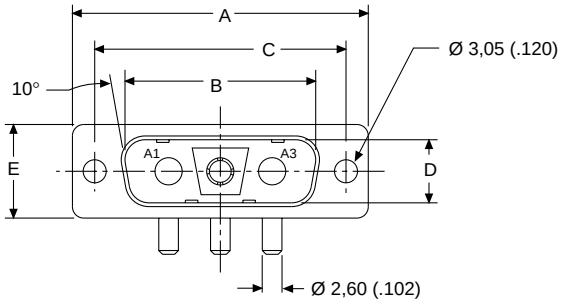

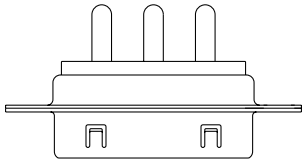

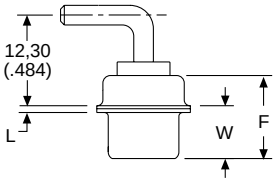

Dimensions

Shell Size	A ±0,38 (.015)	B ±0,13 (.005)	C ±0,13 (.005)	D ±0,13 (.005)	E ±0,38 (.015)	F ±0,25 (.010)	W ±0,368 (.0145)	L ±0,25 (.010)
DA	39,14 (1.541)	25,25 (.994)	33,32 (1.312)	8,36 (.329)	12,55 (.494)	10,72 (.422)	6,693 (.2635)	0,76 (.030)

Dimensions are shown in mm (inch)
Dimensions subject to change

D*JT Combo — High Power 90°

Receptacle

Reader's Resource
For contact cavity arrangements, see page 223.
For P.C. hole patterns, see page 252.
For panel cutouts, see page 221.
For hardware views (European), see page 227.

Part Numbers

Filter Capacitance	Through Hole	Clinch Nut #4-40 UNC	Clinch Nut M3
1000 pF	DAJT3W3S1-1A0N	DAJTE3W3S1-1A0N	DAJTX3W3S1-1A0N
1500 pF	DAJT3W3S6-1A0N	DAJTE3W3S6-1A0N	DAJTX3W3S6-1A0N
5000 pF	DAJT3W3S5-1AON	DAJTE3W3S5-1AON	DAJTX3W3S5-1AON
47000 pF	DAJT3W3S9-1A0N	DAJTE3W3S9-1A0N	DAJTX3W3S9-1A0N

Note: For performance class 1 add -A190. Example: DAJT3W3S9-1AON-A190

Part Numbers — Keyed Configuration

Filter Capacitance	Through Hole	Clinch Nut #4-40 UNC	Clinch Nut M3
1000 pF	DAJT3WK3S1-1A0N	DAJTE3WK3S1-1A0N	DAJTX3WK3S1-1A0N
1500 pF	DAJT3WK3S6-1A0N	DAJTE3WK3S6-1A0N	DAJTX3WK3S6-1A0N
5000 pF	DAJT3WK3S5-1AON	DAJTE3WK3S5-1AON	DAJTX3WK3S5-1AON
47000pF	DAJT3WK3S9-1A0N	DAJTE3WK3S9-1A0N	DAJTX3WK3S9-1A0N

Note: For performance class 1 add -A190. Example: DAJT3WK3S9-1AON-A190
For electrical data, see page 107.

Engaging Face

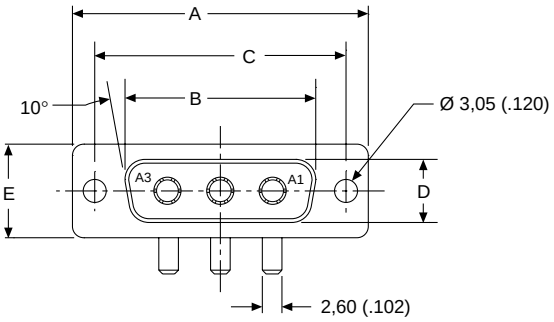

Keyed Configuration

Engaging Face

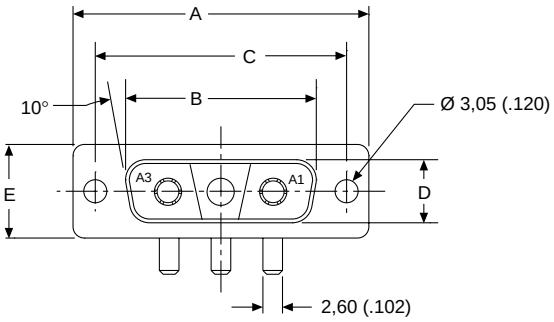

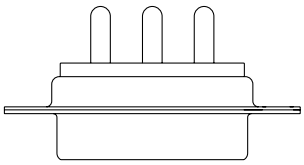

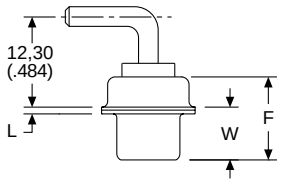

Dimensions

Shell Size	A ±0,38 (.015)	B ±0,13 (.005)	C ±0,13 (.005)	D ±0,13 (.005)	E ±0,38 (.015)	F ±0,25 (.010)	W ±0,38 (.015)	L ±0,25 (.010)
DA	39,14 (1.541)	24,66 (.971)	33,32 (1.312)	7,90 (.311)	12,55 (.494)	10,90 (.429)	6,94 (.273)	0,76 (.030)

D*JT Combo — High Power Straight

Plug

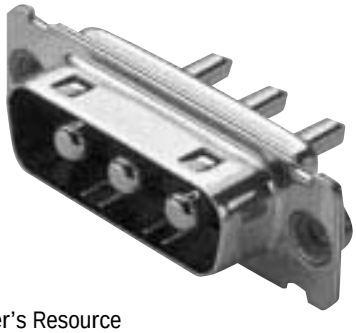

Reader's Resource
For contact cavity arrangements, see page 222.
For P.C. hole patterns, see page 254.
For panel cutouts, see page 221.
For hardware views (European), see page 227.

Part Numbers

Filter Capacitance	Through Hole	Clinch Nut #4-40 UNC	Clinch Nut M3
1000 pF	DAJT3W3P1-OL4	DAJTE3W3P1-OL4	DAJTX3W3P1-OL4
1500 pF	DAJT3W3P6-OL4	DAJTE3W3P6-OL4	DAJTX3W3P6-OL4
5000 pF	DAJT3W3P5-OL4	DAJTE3W3P5-OL4	DAJTX3W3P5-OL4
47000 pF	DAJT3W3P9-OL4	DAJTE3W3P9-OL4	DAJTX3W3P9-OL4

Note: For performance class 1 add -A190. Example: DAJT3W3P6-OL4-A190

Part Numbers — Keyed Configuration

Filter Capacitance	Through Hole	Clinch Nut #4-40 UNC	Clinch Nut M3
1000 pF	DAJT3WK3P1-OL4	DAJTE3WK3P1-OL4	DAJTX3WK3P1-OL4
1500 pF	DAJT3WK3P6-OL4	DAJTE3WK3P6-OL4	DAJTX3WK3P6-OL4
5000 pF	DAJT3WK3P5-OL4	DAJTE3WK3P5-OL4	DAJTX3WK3P5-OL4
47000 pF	DAJT3WK3P9-OL4	DAJTE3WK3P9-OL4	DAJTX3WK3P9-OL4

Note: For performance class 1 add -A190. Example: DAJT3WK3P6-OL4-A190
For electrical data, see page 107.

Engaging Face

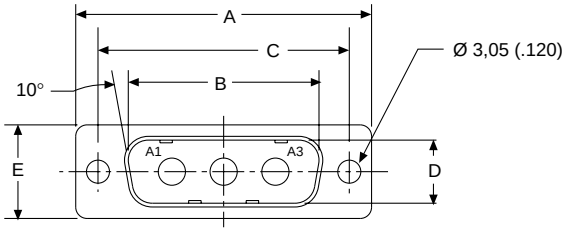

Keyed Configuration

Engaging Face

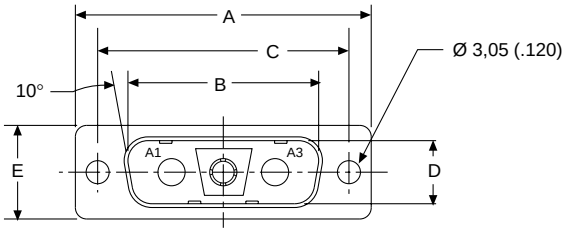

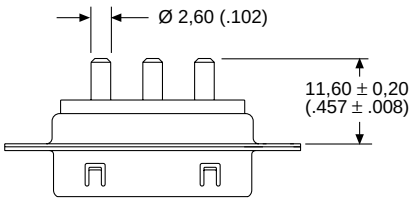

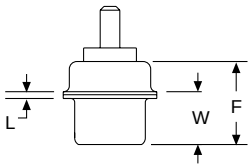

Dimensions

Shell Size	A ±0,38 (.015)	B ±0,13 (.005)	C ±0,13 (.005)	D ±0,13 (.005)	E ±0,38 (.015)	F ±0,25 (.010)	W ±0,368 (.0145)	L ±0,25 (.010)
DA	39,14 (1.541)	25,25 (.994)	33,32 (1.312)	8,36 (.329)	12,55 (.494)	10,72 (.422)	6,693 (.2635)	0,76 (.030)

Dimensions are shown in mm (inch)
Dimensions subject to change

D*JT Combo — High Power Straight

Receptacle

Reader's Resource
For contact cavity arrangements, see page 223.
For P.C. hole patterns, see page 257.
For panel cutouts, see page 221.
For hardware views (European), see page 227.

Part Numbers

Filter Capacitance	Through Hole	Clinch Nut #4-40 UNC	Clinch Nut M3
1000 pF	DAJT3W3S1-OL4	DAJTE3W3S1-OL4	DAJTX3W3S1-OL4
1500 pF	DAJT3W3S6-OL4	DAJTE3W3S6-OL4	DAJTX3W3S6-OL4
5000 pF	DAJT3W3S5-OL4	DAJTE3W3S5-OL4	DAJTX3W3S5-OL4
47000 pF	DAJT3W3S9-OL4	DAJTE3W3S9-OL4	DAJTX3W3S9-OL4

Note: For performance class 1 add -A190. Example: DAJT3W3S6-OL4-A190

Part Numbers — Keyed Configuration

Filter Capacitance	Through Hole	Clinch Nut #4-40 UNC	Clinch Nut M3
1000 pF	DAJT3WK3S1-OL4	DAJTE3WK3S1-OL4	DAJTX3WK3S1-OL4
1500 pF	DAJT3WK3S6-OL4	DAJTE3WK3S6-OL4	DAJTX3WK3S6-OL4
5000 pF	DAJT3WK3S5-OL4	DAJTE3WK3S5-OL4	DAJTX3WK3S5-OL4
47000 pF	DAJT3WK3S9-OL4	DAJTE3WK3S9-OL4	DAJTX3WK3S9-OL4

Note: For performance class 1 add -A190. Example: DAJT3WK3S-OL4-A190
For electrical data, see page 107.

Engaging Face

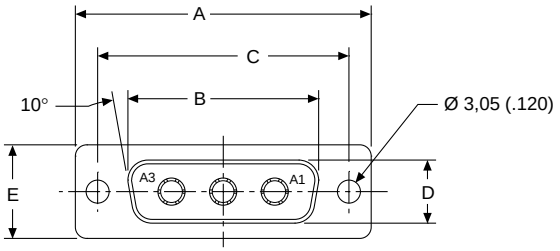

Keyed Configuration

Engaging Face

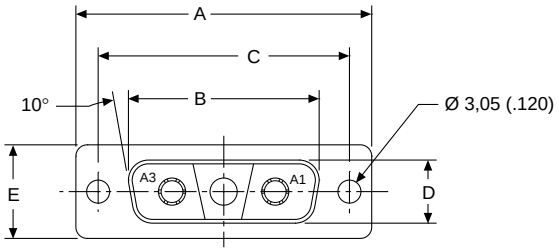

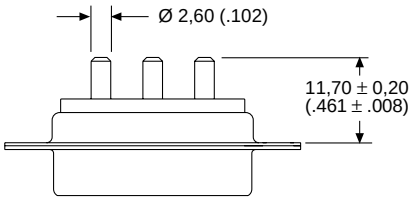

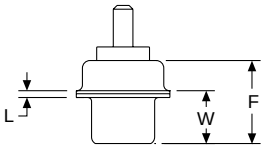

Dimensions

Shell Size	A ±0,38 (.015)	B ±0,13 (.005)	C ±0,13 (.005)	D ±0,13 (.005)	E ±0,38 (.015)	F ±0,25 (.010)	W ±0,38 (.015)	L ±0,25 (.010)
DA	39,14 (1.541)	24,66 (.971)	33,32 (1.312)	7,90 (.311)	12,55 (.494)	10,90 (.429)	6,94 (.273)	0,76 (.030)

D*JT Combo — High Power Solder Cup

Plug

Reader's Resource
For contact cavity arrangements, see page 222.
For panel cutouts, see page 221.
For hardware views (European), see page 227.

Part Numbers

Filter Capacitance	Through Hole	Clinch Nut #4-40 UNC	Clinch Nut M3
1000 pF	DAJT3W3P1	DAJTE3W3P1	DAJTX3W3P1
1500 pF	DAJT3W3P6	DAJTE3W3P6	DAJTX3W3P6
5000 pF	DAJT3W3P5	DAJTE3W3P5	DAJTX3W3P5
47000 pF	DAJT3W3P9	DAJTE3W3P9	DAJTX3W3P9

Note: For performance class 1 add -A190. Example: DAJT3W3P6-A190

Part Numbers – Keyed Configuration

Filter Capacitance	Through Hole	Clinch Nut #4-40 UNC	Clinch Nut M3
1000 pF	DAJT3WK3P1	DAJTE3WK3P1	DAJTX3WK3P1
1500 pF	DAJT3WK3P6	DAJTE3WK3P6	DAJTX3WK3P6
5000 pF	DAJT3WK3P5	DAJTE3WK3P5	DAJTX3WK3P5
47000 pF	DAJT3WK3P9	DAJTE3WK3P9	DAJTX3WK3P9

Note: For performance class 1 add -A190. Example: DAJT3WK3P6-A190
For electrical data, see page 107.

Engaging Face

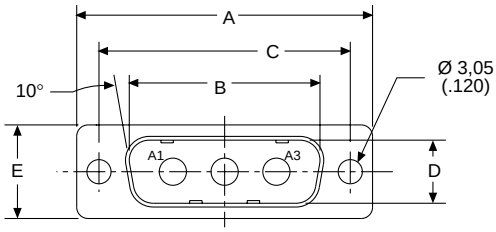

Keyed Configuration

Engaging Face

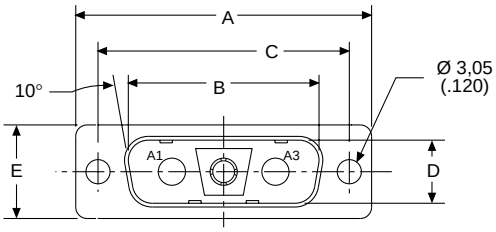

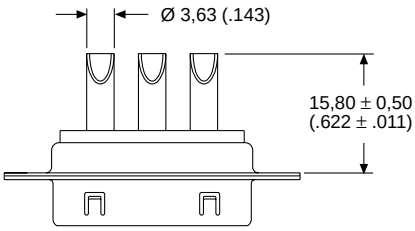

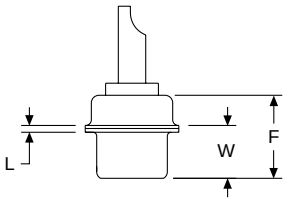

Dimensions

Shell Size	A ±0,38 (.015)	B ±0,13 (.005)	C ±0,13 (.005)	D ±0,13 (.005)	E ±0,38 (.015)	F ±0,25 (.010)	W ±0,368 (.0145)	L ±0,25 (.010)
DA	39,14 (1.541)	25,25 (.994)	33,32 (1.312)	8,36 (.329)	12,55 (.494)	10,72 (.422)	6,693 (.2635)	0,76 (.030)

ITT Cannon

Dimensions are shown in mm (inch)
Dimensions subject to change

D*JT Combo — High Power Solder Cup

Receptacle

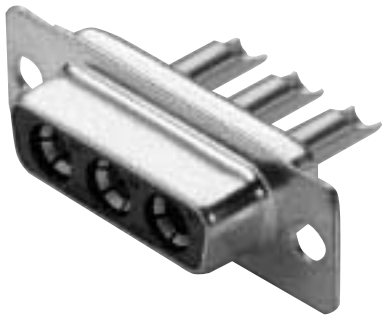

Reader's Resource
For contact cavity arrangements, see page 223.
For panel cutouts, see page 221.
For hardware views (European), see page 227.

Part Numbers

Filter Capacitance	Through Hole	Clinch Nut #4-40 UNC	Clinch Nut M3
1000 pF	DAJT3W3S1	DAJTE3W3S1	DAJTX3W3S1
1500 pF	DAJT3W3S6	DAJTE3W3S6	DAJTX3W3S6
5000 pF	DAJT3W3S5	DAJTE3W3S5	DAJTX3W3S5
47000 pF	DAJT3W3S9	DAJTE3W3S9	DAJTX3W3S9

Note: For performance class 1 add -A190. Example: DAJT3W3S6-A190

Part Numbers — Keyed Configuration

Filter Capacitance	Through Hole	Clinch Nut #4-40 UNC	Clinch Nut M3
1000 pF	DAJT3WK3S1	DAJTE3WK3S1	DAJTX3WK3S1
1500 pF	DAJT3WK3S6	DAJTE3WK3S6	DAJTX3WK3S6
5000 pF	DAJT3WK3S5	DAJTE3WK3S5	DAJTX3WK3S5
47000 pF	DAJT3WK3S9	DAJTE3WK3S9	DAJTX3WK3S9

Note: For performance class 1 add -A190. Example: DAJT3WK3S6-A190
For electrical data, see page 107.

Engaging Face

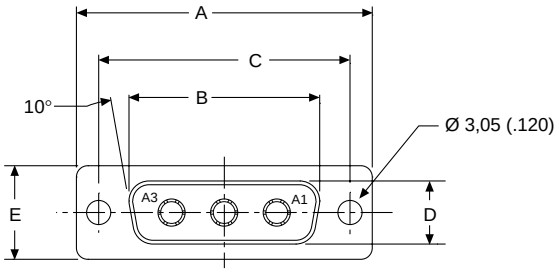

Keyed Configuration

Engaging Face

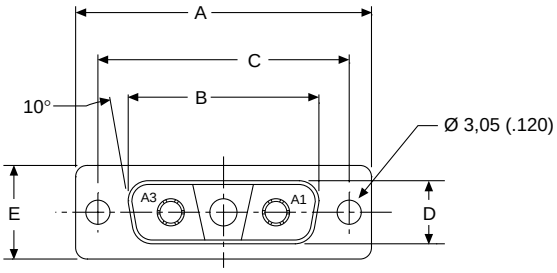

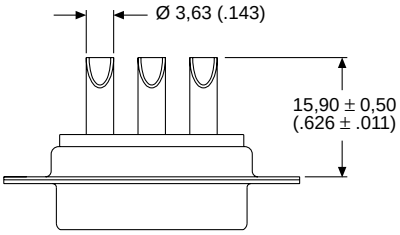

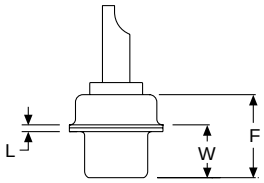

Dimensions

Shell Size	A ±0,38 (.015)	B ±0,13 (.005)	C ±0,13 (.005)	D ±0,13 (.005)	E ±0,38 (.015)	F ±0,25 (.010)	W ±0,38 (.015)	L ±0,25 (.010)
DA	39,14 (1.541)	24,66 (.971)	33,32 (1.312)	7,90 (.311)	12,55 (.494)	10,90 (.429)	6,94 (.273)	0,76 (.030)

Selection Index Page

Military/High Reliability
An Introduction 130
Standard Layout
90° PC Tail with Plastic Bracket 132
90° PC Tail. 134
Straight PC Tail 136
Wrap Post Connector 138
Solder Cup Connector 140
24308-Style Cross Reference 142
MIL-C-39028 Crimp Contacts 143
HE501/D*M Cross Reference 144
MIL-24308 Test Data 145
Combo D® PCB Connectors with Coaxial 75 Ohm Contacts (50 Ohm Option)
Coaxial 90° (Sizes DE-DC) 146
Coaxial 90° (Size DD). 148
Coaxial Straight (Sizes DE-DC) 150
Coaxial Straight (Size DD). 152
Combo D® PCB Connectors with High Power Contacts
40 A High Power 90° (Sizes DE-DC). 154
40 A High Power 90° (Size DD) 156
40 A High Power Straight (Sizes DE-DC). 158
40 A High Power Straight (Size DD) 160
Combo D® PCB Connectors with High Voltage Contacts
High Voltage Straight (Sizes DE-DC) 162
High Voltage Straight (Size DD). 164
Combo D® PCB Connectors with (Size 20) Signal Contacts Only
Cable Solder Cup (Sizes DE-DD). 166

Dimensions are shown in mm (inch)
Dimensions subject to change

ITT Cannon Military/High Reliability D Subminiature connectors are used in many applications, including aerospace, transportation, communication systems, information systems and test equipment. Being the inventor of the D Subminiature connector, ITT Cannon is able to use its extensive design expertise and high quality manufacturing processes to insure the optimum performance and reliability.

The D Subminiature connectors with fixed contacts in solder cup, straight and 90° PC contact terminations are designed to be comparable to MIL-C-24308 (see cross reference, pages 142-143). These high-reliability D Subminiature connectors are the finest quality connectors available at the most competitive prices in the market.

Applications:
- Aerospace
- Transportation
- Communication Systems
- Information Systems
- Test Equipment

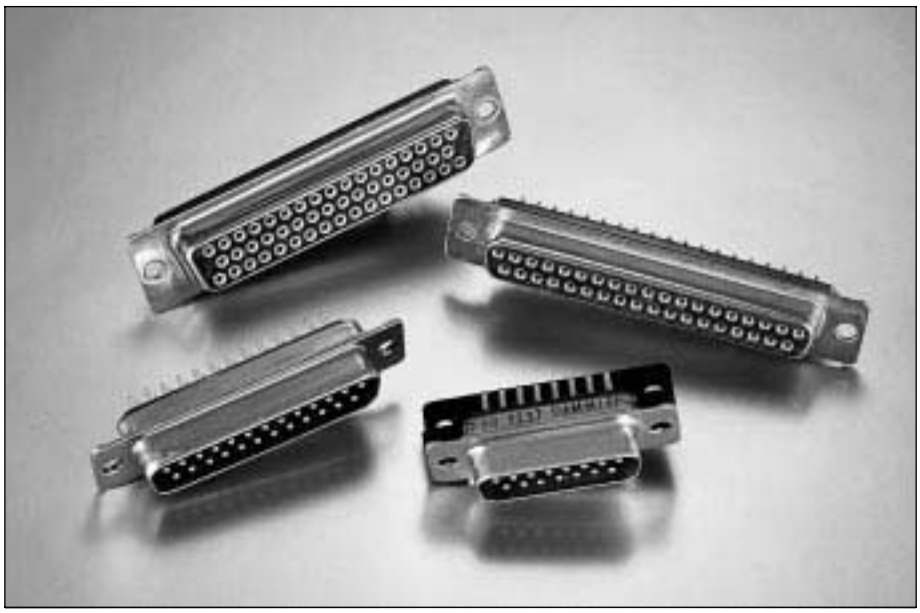

Product Features

- Suitable for a variety of cable and printed circuit board options
- Solder cup version accommodates wire size 20 AWG maximum
- 5 A standard current rating
- Clinch Nut and Float Mount Options

Specifications

Temperature Rating	−55°C to 125°C
Signal Contact Current Rating	7.5 A current capacity
Signal Contact Resistance	55 millivolt max. at 7.5 test current
Signal Contact Dielectric Withstanding Voltage	1250 VAC at Sea Level
Coaxial Current Rating	5 A
Coaxial Dielectric Withstanding Voltage	1000 VAC at Sea Level
Coaxial Impedance	75 Ω or 50 Ω
Coaxial VSWR	Less than 1.30 + .03F for F up to 500 MHz
Coaxial Insertion Loss	.3dB loss at 500 MHz
High Power Current Rating	Up to 40 A
High Power Dielectric Withstanding Voltage	1000 VAC at Sea Level
High Voltage Current Rating	5 A
High Voltage Contact Dielectric Withstanding Voltage	2800 V at Sea Level

Materials and Finishes

Description	Material	Finish/Treatment
Shell	Steel	Yellow Chromate over Zinc (Cadmium available upon request; order code -A101)
Insulator	Polyester, UL 94V-0, Color: Green	None
Contacts (Military)	Copper Alloy	50 microinches of Gold over Nickel in mating area, Gold over Nickel on balance
Contacts (Commercial)	Copper Alloy	Gold over Nickel on mating area, Tin on balance
Dual Float Mount Hardware	Stainless Steel	Passivated
Clinch Nut Hardware	Stainless Steel with plastic insert	Passivated
Standoff	Stainless Steel	Passivated
Plastic Bracket	Thermoplastic, UL 94V-0	None
Metal Bracket	Steel	Zinc (Tin if boardlocks are attached)

Coaxial/High Power/High Voltage Contact Assemblies

Contacts and Outer Shells	Copper Alloy	Gold over Nickel
Ring, Retaining	Copper Alloy	Nickel
Insulator (Coaxial Only)	Teflon	None
Insulator (High Voltage Only)	Thermoplastic	None

90° PC Tail with Plastic Bracket

Plug

Reader's Resource

For contact cavity arrangements, see page 224.
For P.C. hole patterns, see page 272.
For panel cutouts, see page 221.

Part Numbers

		Military Part Numbers					
		Ø Y 0,76 (.030)			Ø Y 1,02 (.040)		
Shell Size	Layout	X 3,23 (.127)	X 4,01 (.158)	X 4,65 (.183)	X 3,23 (.127)	X 4,01 (.158)	X 4,65 (.183)
DE	9	DEMM9PD	DEMM9PL	DEMM9PS	DEMM9PA	DEMM9PG	DEMM9PW
DA	15	DAMM15PD	DAMM15PL	DAMM15PS	DAMM15PA	DAMM15PG	DAMM15PW
DB	25	DBMM25PD	DBMM25PL	DBMM25PS	DBMM25PA	DBMM25PG	DBMM25PW
DC	37	DCMM37PD	DCMM37PL	DCMM37PS	DCMM37PA	DCMM37PG	DCMM37PW
DD	50	DDMM50PD	DDMM50PL	DDMM50PS	DDMM50PA	DDMM50PG	DDMM50PW

		Commercial Part Numbers					
		Ø Y 0,76 (.030)			Ø Y 1,02 (.040)		
Shell Size	Layout	X 3,23 (.127)	X 4,01 (.158)	X 4,65 (.183)	X 3,23 (.127)	X 4,01 (.158)	X 4,65 (.183)
DE	9	DEM9PD	DEM9PL	DEM9PS	DEM9PA	DEM9PG	DEM9PW
DA	15	DAM15PD	DAM15PL	DAM15PS	DAM15PA	DAM15PG	DAM15PW
DB	25	DBM25PD	DBM25PL	DBM25PS	DBM25PA	DBM25PG	DBM25PW
DC	37	DCM37PD	DCM37PL	DCM37PS	DCM37PA	DCM37PG	DCM37PW
DD	50	DDM50PD	DDM50PL	DDM50PS	DDM50PA	DDM50PG	DDM50PW

Engaging Face

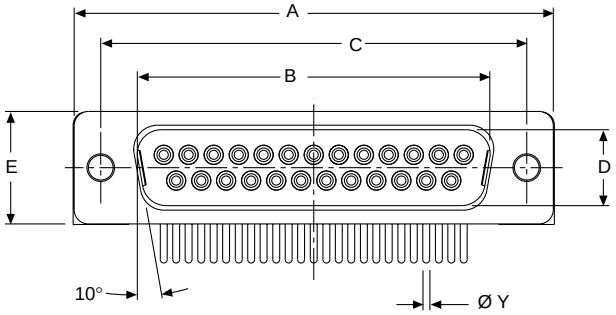

DD Configuration

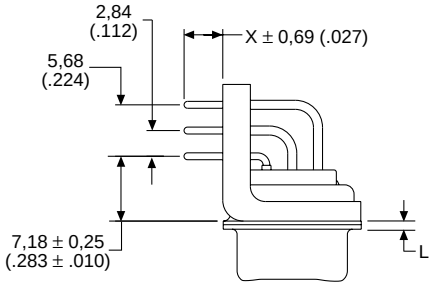

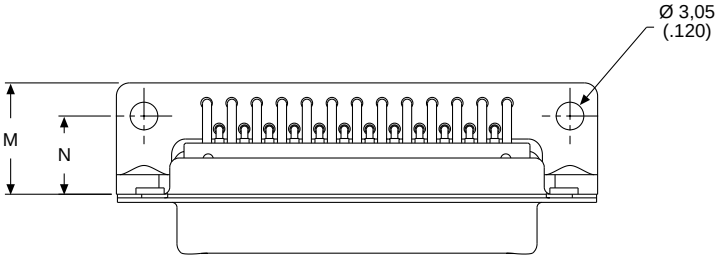

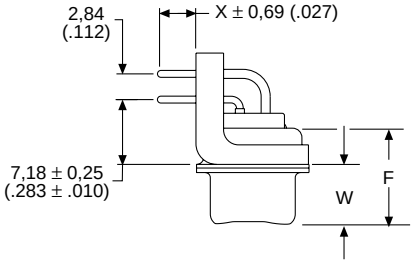

Dimensions

Shell Size	A ±0,38 (.015)	B ±0,13 (.005)	C ±0,13 (.005)	D ±0,13 (.005)	E ±0,38 (.015)	F ±0,25 (.010)	W ±0,368 (.0145)	W ±0,41 (.016)	L ±0,25 (.010)	M ±0,25 (.010)	N ±0,13 (.005)
DE	30,81 (1.213)	16,92 (.666)	24,99 (.984)	8,36 (.329)	12,55 (.494)	10,72 (.422)	6,693 (.2635)	—	0,76 (.030)	12,30 (.484)	8,64 (.340)
DA	39,14 (1.541)	25,25 (.994)	33,32 (1.312)	8,36 (.329)	12,55 (.494)	10,72 (.422)	6,693 (.2635)	—	0,76 (.030)	12,30 (.484)	8,64 (.340)
DB	53,04 (2.088)	38,96 (1.534)	47,04 (1.852)	8,36 (.329)	12,55 (.494)	10,82 (.426)	—	6,84 (.269)	0,99 (.039)	12,30 (.484)	8,64 (.340)
DC	69,32 (2.729)	55,42 (2.182)	63,50 (2.500)	8,36 (.329)	12,55 (.494)	10,82 (.426)	—	6,84 (.269)	0,99 (.039)	12,30 (.484)	8,64 (.340)
DD	66,93 (2.635)	52,81 (2.079)	61,11 (2.406)	11,07 (.436)	15,37 (.605)	10,82 (.426)	—	6,84 (.269)	0,99 (.039)	15,09 (.594)	10,04 (.395)

ITT Cannon

Dimensions are shown in mm (inch)
Dimensions subject to change

90° PC Tail with Plastic Bracket

Receptacle

Reader's Resource
For contact cavity arrangements, see page 224.
For P.C. hole patterns, see page 272.
For panel cutouts, see page 221.

Part Numbers

		Military Part Numbers					
		Ø Y 0,76 (.030)			Ø Y 1,02 (.040)		
Shell Size	Layout	X 3,23 (.127)	X 4,01 (.158)	X 4,65 (.183)	X 3,23 (.127)	X 4,01 (.158)	X 4,65 (.183)
DE	9	DEMM9SD	DEMM9SL	DEMM9SS	DEMM9SA	DEMM9SG	DEMM9SW
DA	15	DAMM15SD	DAMM15SL	DAMM15SS	DAMM15SA	DAMM15SG	DAMM15SW
DB	25	DBMM25SD	DBMM25SL	DBMM25SS	DBMM25SA	DBMM25SG	DBMM25SW
DC	37	DCMM37SD	DCMM37SL	DCMM37SS	DCMM37SA	DCMM37SG	DCMM37SW
DD	50	DDMM50SD	DDMM50SL	DDMM50SS	DDMM50SA	DDMM50SG	DDMM50SW

		Commercial Part Numbers					
		Ø Y 0,76 (.030)			Ø Y 1,02 (.040)		
Shell Size	Layout	X 3,23 (.127)	X 4,01 (.158)	X 4,65 (.183)	X 3,23 (.127)	X 4,01 (.158)	X 4,65 (.183)
DE	9	DEM9SD	DEM9SL	DEM9SS	DEM9SA	DEM9SG	DEM9SW
DA	15	DAM15SD	DAM15SL	DAM15SS	DAM15SA	DAM15SG	DAM15SW
DB	25	DBM25SD	DBM25SL	DBM25SS	DBM25SA	DBM25SG	DBM25SW
DC	37	DCM37SD	DCM37SL	DCM37SS	DCM37SA	DCM37SG	DCM37SW
DD	50	DDM50SD	DDM50SL	DDM50SS	DDM50SA	DDM50SG	DDM50SW

Engaging Face

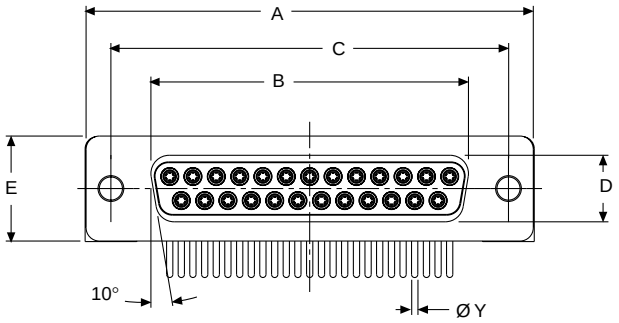

DD Configuration

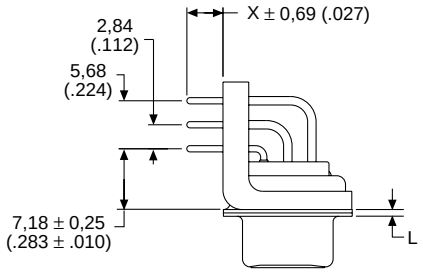

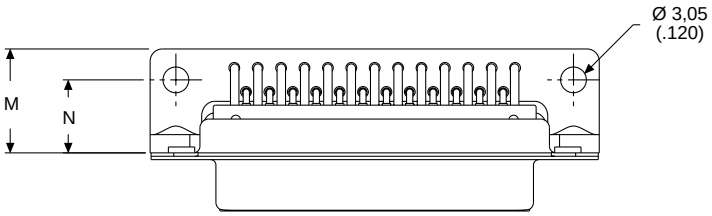

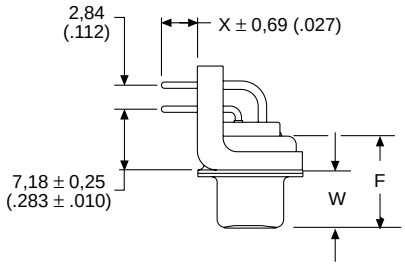

Dimensions

Shell Size	A ±0,38 (.015)	B ±0,13 (.005)	C ±0,13 (.005)	D ±0,13 (.005)	E ±0,38 (.015)	F ±0,25 (.010)	W ±0,38 (.015)	L ±0,25 (.010)	M ±0,25 (.010)	N ±0,13 (.005)
DE	30,81 (1.213)	16,33 (.643)	24,99 (.984)	7,90 (.311)	12,55 (.494)	10,90 (.429)	6,94 (.273)	0,76 (.030)	12,30 (.484)	8,64 (.340)
DA	39,14 (1.541)	24,66 (.971)	33,32 (1.312)	7,90 (.311)	12,55 (.494)	10,90 (.429)	6,94 (.273)	0,76 (.030)	12,30 (.484)	8,64 (.340)
DB	53,04 (2.088)	38,38 (1.511)	47,04 (1.852)	7,90 (.311)	12,55 (.494)	10,90 (.429)	6,94 (.273)	0,76 (.030)	12,30 (.484)	8,64 (.340)
DC	69,32 (2.729)	54,84 (2.159)	63,50 (2.500)	7,90 (.311)	12,55 (.494)	10,90 (.429)	6,94 (.273)	0,76 (.030)	12,30 (.484)	8,64 (.340)
DD	66,93 (2.635)	52,42 (2.064)	61,11 (2.406)	10,74 (.423)	15,37 (.605)	10,90 (.429)	6,94 (.273)	0,76 (.030)	15,09 (.594)	10,04 (.395)

90° PC Tail

Plug

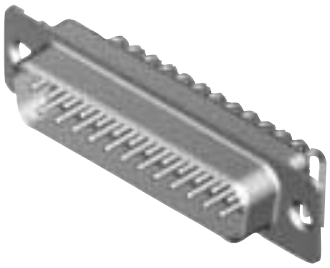

Reader's Resource

For contact cavity arrangements, see page 224.
For P.C. hole patterns, see page 272.
For panel cutouts, see page 221.
For hardware views (Standard), see page 226.

Part Numbers

		Military Part Numbers				
		Ø Y 0,76 (.030)			Ø Y 1,02 (.040)	
Shell Size	Layout	X 3,23 (.127)	X 4,01 (.158)	X 4,65 (.183)	X 3,23 (.127)	X 4,01 (.158)
DE	9	DEMM9PF	DEMM9PP	DEMM9PR	DEMM9PC	DEMM9PK
DA	15	DAMM15PF	DAMM15PP	DAMM15PR	DAMM15PC	DAMM15PK
DB	25	DBMM25PF	DBMM25PP	DBMM25PR	DBMM25PC	DBMM25PK
DC	37	DCMM37PF	DCMM37PP	DCMM37PR	DCMM37PC	DCMM37PK
DD	50	DDMM50PF	DDMM50PP	DDMM50PR	DDMM50PC	DDMM50PK

		Commercial Part Numbers				
		Ø Y 0,76 (.030)			Ø Y 1,02 (.040)	
Shell Size	Layout	X 3,23 (.127)	X 4,01 (.158)	X 4,65 (.183)	X 3,23 (.127)	X 4,01 (.158)
DE	9	DEM9PF	DEM9PP	DEM9PR	DEM9PC	DEM9PK
DA	15	DAM15PF	DAM15PP	DAM15PR	DAM15PC	DAM15PK
DB	25	DBM25PF	DBM25PP	DBM25PR	DBM25PC	DBM25PK
DC	37	DCM37PF	DCM37PP	DCM37PR	DCM37PC	DCM37PK
DD	50	DDM50PF	DDM50PP	DDM50PR	DCM50PC	DDM50PK

Engaging Face

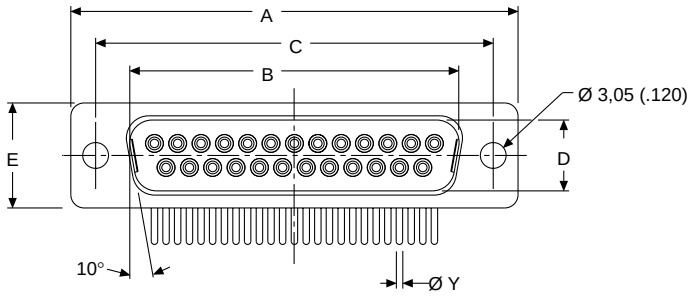

DD Configuration

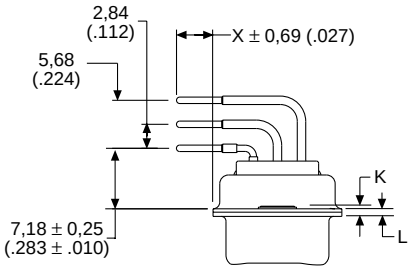

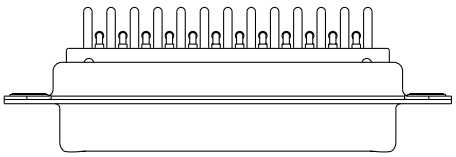

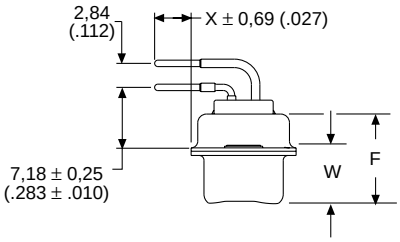

Dimensions

Shell Size	A ±0,38 (.015)	B ±0,13 (.005)	C ±0,13 (.005)	D ±0,13 (.005)	E ±0,38 (.015)	F ±0,25 (.010)	W ±0,368 (.0145)	W ±0,41 (.016)	K ±0,317 (.0125)	K ±0,25 (.010)	L ±0,25 (.010)
DE	30,81 (1.213)	16,92 (.666)	24,99 (.984)	8,36 (.329)	12,55 (.494)	10,72 (.422)	6,693 (.2635)	—	1,206 (.0475)	—	0,76 (.030)
DA	39,14 (1.541)	25,25 (.994)	33,32 (1.312)	8,36 (.329)	12,55 (.494)	10,72 (.422)	6,693 (.2635)	—	1,206 (.0475)	—	0,76 (.030)
DB	53,04 (2.088)	38,96 (1.534)	47,04 (1.852)	8,36 (.329)	12,55 (.494)	10,82 (.426)	—	6,84 (.269)	—	1,52 (.060)	0,99 (.039)
DC	69,32 (2.729)	55,42 (2.182)	63,50 (2.500)	8,36 (.329)	12,55 (.494)	10,82 (.426)	—	6,84 (.269)	—	1,52 (.060)	0,99 (.039)
DD	66,93 (2.635)	52,81 (2.079)	61,11 (2.406)	11,07 (.436)	15,37 (.605)	10,82 (.426)	—	6,84 (.269)	—	1,52 (.060)	0,99 (.039)

Dimensions are shown in mm (inch)
Dimensions subject to change

90° PC Tail

Receptacle

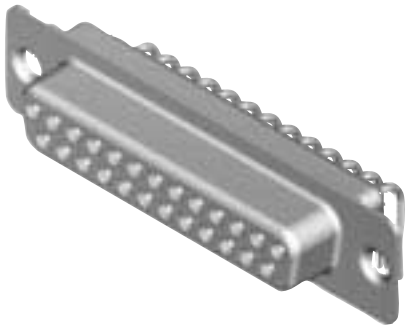

Reader's Resource
For contact cavity arrangements, see page 224.
For P.C. hole patterns, see page 272.
For panel cutouts, see page 221.
For hardware view (Standard), see page 226.

Part Numbers

		Military Part Numbers				
		Ø Y 0,76 (.030)			Ø Y 1,02 (.040)	
Shell Size	Layout	X 3,23 (.127)	X 4,01 (.158)	X 4,65 (.183)	X 3,23 (.127)	X 4,01 (.158)
DE	9	DEMM9SF	DEMM9SP	DEMM9SR	DEMM9SC	DEMM9SK
DA	15	DAMM15SF	DAMM15SP	DAMM15SR	DAMM15SC	DAMM15SK
DB	25	DBMM25SF	DBMM25SP	DBMM25SR	DBMM25SC	DBMM25SK
DC	37	DCMM37SF	DCMM37SP	DCMM37SR	DCMM37SC	DCMM37SK
DD	50	DDMM50SF	DDMM50SP	DDMM50SR	DDMM50SC	DDMM50SK

		Commercial Part Numbers				
		Ø Y 0,76 (.030)			Ø Y 1,02 (.040)	
Shell Size	Layout	X 3,23 (.127)	X 4,01 (.158)	X 4,65 (.183)	X 3,23 (.127)	X 4,01 (.158)
DE	9	DEM9SF	DEM9SP	DEM9SR	DEM9SC	DEM9SK
DA	15	DAM15SF	DAM15SP	DAM15SR	DAM15SC	DAM15SK
DB	25	DBM25SF	DBM25SP	DBM25SR	DBM25SC	DBM25SK
DC	37	DCM37SF	DCM37SP	DCM37SR	DCM37SC	DCM37SK
DD	50	DDM50SF	DDM50SP	DDM50SR	DDM50SC	DDM50SK

Engaging Face

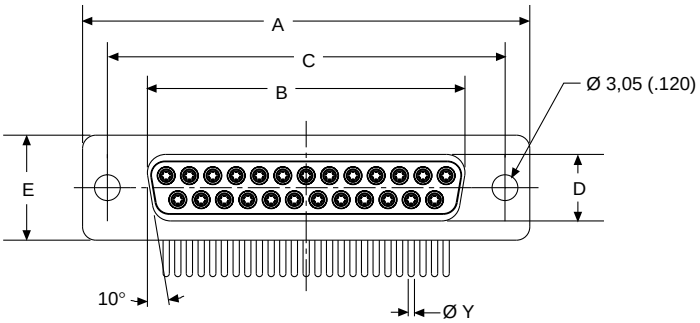

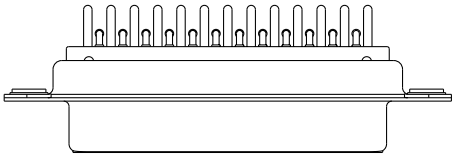

DD Configuration

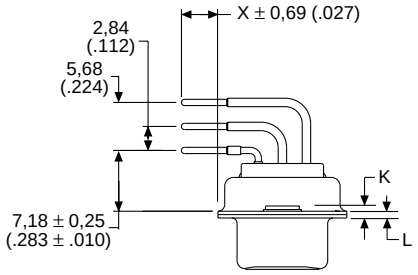

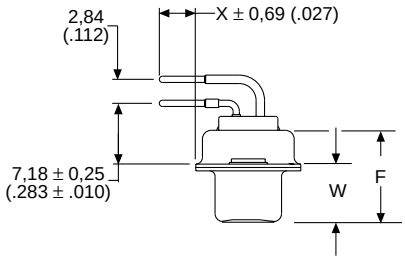

Dimensions

Shell Size	A ±0,38 (.015)	B ±0.13 (.005)	C ±0,13 (.005)	D ±0,13 (.005)	E ±0,38 (.015)	F ±0,25 (.010)	W ±0,38 (.015)	K ±0,318 (.0125)	L ±0,25 (.010)
DE	30,81 (1.213)	16,33 (.643)	24,99 (.984)	7,90 (.311)	12,55 (.494)	10,90 (.429)	6,94 (.273)	1,206 (.0475)	0,76 (.030)
DA	39,14 (1.541)	24,66 (.971)	33,32 (1.312)	7,90 (.311)	12,55 (.494)	10,90 (.429)	6,94 (.273)	1,206 (.0475)	0,76 (.030)
DB	53,04 (2.088)	38,38 (1.511)	47,04 (1.852)	7,90 (.311)	12,55 (.494)	10,90 (.429)	6,94 (.273)	1,206 (.0475)	0,76 (.030)
DC	69,32 (2.729)	54,84 (2.159)	63,50 (2.500)	7,90 (.311)	12,55 (.494)	10,90 (.429)	6,94 (.273)	1,206 (.0475)	0,76 (.030)
DD	66,93 (2.635)	52,42 (2.064)	61,11 (2.406)	10,74 (.423)	15,37 (.605)	10,90 (.429)	6,94 (.273)	1,206 (.0475)	0,76 (.030)

Straight PC Tail

Plug

Reader's Resource

For contact cavity arrangements, see page 224.
For P.C. hole patterns, see page 274.
For panel cutouts, see page 221.
For hardware views (Standard), see page 226.

Part Numbers

		Military Part Numbers					
		Ø Y 0,76 (.030)			Ø Y 1,02 (.040)		
Shell Size	Layout	X 3,23 (.127)	X 4,01 (.158)	X 4,65 (.183)	X 3,23 (.127)	X 4,01 (.158)	X 4,65 (.183)
DE	9	DEMM9PE*	DEMM9PM*	DEMM9PZ*	DEMM9PB	DEMM9PH	DEMM9PX*
DA	15	DAMM15PE*	DAMM15PM*	DAMM15PZ*	DAMM15PB	DAMM15PH	DAMM15PX*
DB	25	DBMM25PE*	DBMM25PM*	DBMM25PZ*	DBMM25PB	DBMM25PH	DBMM25PX*
DC	37	DCMM37PE*	DCMM37PM*	DCMM37PZ*	DCMM37PB	DCMM37PH	DCMM37PX*
DD	50	DDMM50PE*	DDMM50PM*	DDMM50PZ*	DDMM50PB	DDMM50PH	DDMM50PX*

Note: Spacers (shipped loose) provided only on parts marked *

		Commercial Part Numbers					
		Ø Y 0,76 (.030)			Ø Y 1,02 (.040)		
Shell Size	Layout	X 3,23 (.127)	X 4,01 (.158)	X 4,65 (.183)	X 3,23 (.127)	X 4,01 (.158)	X 4,65 (.183)
DE	9	DEM9PE	DEM9PM	DEM9PZ	DEM9PB	DEM9PH	DEM9PX
DA	15	DAM15PE	DAM15PM	DAM15PZ	DAM15PB	DAM15PH	DAM15PX
DB	25	DBM25PE	DBM25PM	DBM25PZ	DBM25PB	DBM25PH	DBM25PX
DC	37	DCM37PE	DCM37PM	DCM37PZ	DCM37PB	DCM37PH	DCM37PX
DD	50	DDM50PE	DDM50PM	DDM50PZ	DDM50PB	DDM50PH	DDM50PX

Engaging Face

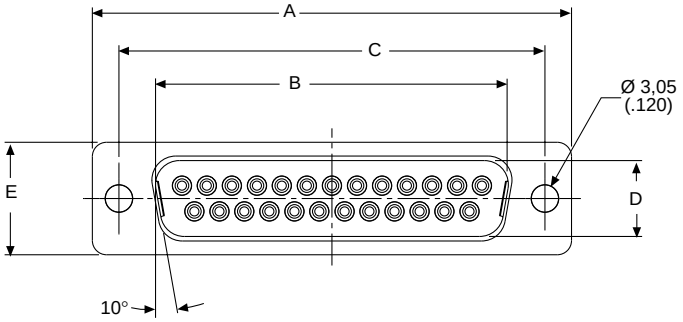

DD Configuration

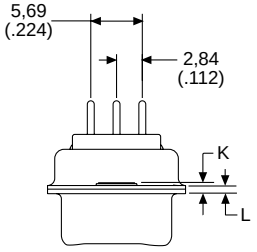

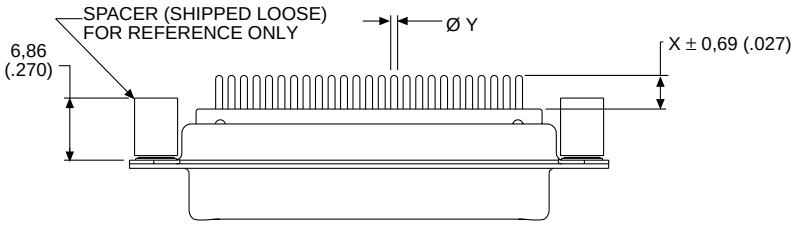

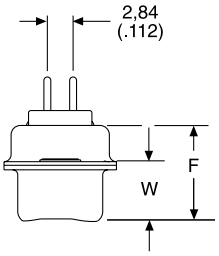

Dimensions

Shell Size	A ±0,38 (.015)	B ±0,13 (.005)	C ±0,13 (.005)	D ±0,13 (.005)	E ±0,38 (.015)	F ±0,25 (.010)	W ±0,368 (.0145)	W ±0,41 (.016)	K ±0,317 (.0125)	K ±0,25 (.010)	L ±0,25 (.010)
DE	30,81 (1.213)	16,92 (.666)	24,99 (.984)	8,36 (.329)	12,55 (.494)	10,72 (.422)	6,693 (.2635)	—	1,206 (.0475)	—	0,76 (.030)
DA	39,14 (1.541)	25,25 (.994)	33,32 (1.312)	8,36 (.329)	12,55 (.494)	10,72 (.422)	6,693 (.2635)	—	1,206 (.0475)	—	0,76 (.030)
DB	53,04 (2.088)	38,96 (1.534)	47,04 (1.852)	8,36 (.329)	12,55 (.494)	10,82 (.426)	—	6,84 (.269)	—	1,52 (.060)	0,99 (.039)
DC	69,32 (2.729)	55,42 (2.182)	63,50 (2.500)	8,36 (.329)	12,55 (.494)	10,82 (.426)	—	6,84 (.269)	—	1,52 (.060)	0,99 (0.39)
DD	66,93 (2.635)	52,81 (2.079)	61,11 (2.406)	11,07 (.436)	15,37 (.605)	10,82 (.426)	—	6,84 (.269)	—	1,52 (.060)	0,99 (.039)

ITT Cannon

Dimensions are shown in mm (inch)
Dimensions subject to change

Straight PC Tail

Receptacle

Reader's Resource

For contact cavity arrangements, see page 224.
For P.C. hole patterns, see page 274.
For panel cutouts, see page 221.
For hardware views (Standard), see page 226.

Part Numbers

		Military Part Numbers					
		Ø Y 0,76 (.030)			Ø Y 1,02 (.040)		
Shell Size	Layout	X 3,23 (.127)	X 4,01 (.158)	X 4,65 (.183)	X 3,23 (.127)	X 4,01 (.158)	X 4,65 (.183)
DE	9	DEMM9SE*	DEMM9SM*	DEMM9SZ*	DEMM9SB	DEMM9SH	DEMM9SX*
DA	15	DAMM15SE*	DAMM15SM*	DAMM15SZ*	DAMM15SB	DAMM15SH	DAMM15SX*
DB	25	DBMM25SE*	DBMM25SM*	DBMM25SZ*	DBMM25SB	DBMM25SH	DBMM25SX*
DC	37	DCMM37SE*	DCMM37SM*	DCMM37SZ*	DCMM37SB	DCMM37SH	DCMM37SX*
DD	50	DDMM50SE*	DDMM50SM*	DDMM50SZ*	DDMM50SB	DDMM50SH	DDMM50SX*

Note: Spacers (shipped loose) provided only on parts marked *

		Commercial Part Numbers					
		Ø Y 0,76 (.030)			Ø Y 1,02 (.040)		
Shell Size	Layout	X 3,23 (.127)	X 4,01 (.158)	X 4,65 (.183)	X 3,23 (.127)	X 4,01 (.158)	X 4,65 (.183)
DE	9	DEM9SE	DEM9SM	DEM9SZ	DEM9SB	DEM9SH	DEM9SX
DA	15	DAM15SE	DAM15SM	DAM15SZ	DAM15SB	DAM15SH	DAM15SX
DB	25	DBM25SE	DBM25SM	DBM25SZ	DBM25SB	DBM25SH	DBM25SX
DC	37	DCM37SE	DCM37SM	DCM37SZ	DCM37SB	DCM37SH	DCM37SX
DD	50	DDM50SE	DDM50SM	DDM50SZ	DDM50SB	DDM50SH	DDM50SX

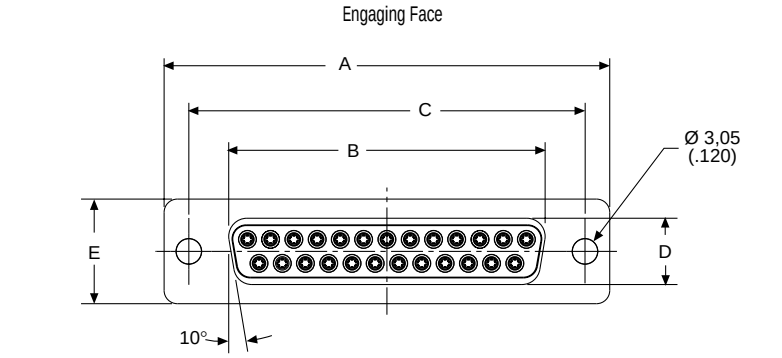

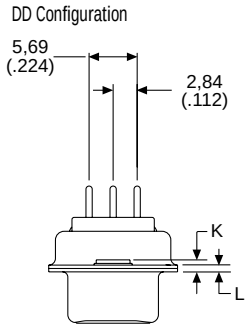

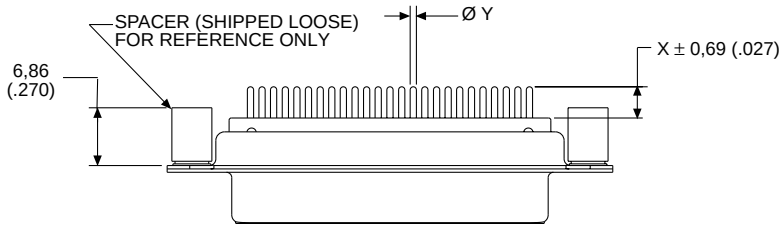

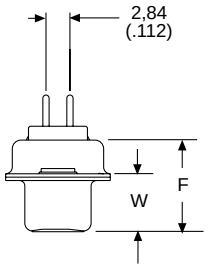

Dimensions

Shell Size	A ±0,38 (.015)	B ±0,13 (.005)	C ±0,13 (.005)	D ±0,13 (.005)	E ±0,38 (.015)	F ±0,25 (.010)	W ±0,38 (.015)	K ±0,318 (.0125)	L ±0,25 (.010)
DE	30,81 (1.213)	16,33 (.643)	24,99 (.984)	7,90 (.311)	12,55 (.494)	10,90 (.429)	6,94 (.273)	1,206 (.0475)	0,76 (.030)
DA	39,14 (1.541)	24,66 (.971)	33,32 (1.312)	7,90 (.311)	12,55 (.494)	10,90 (.429)	6,94 (.273)	1,206 (.0475)	0,76 (.030)
DB	53,04 (2.088)	38,38 (1.511)	47,04 (1.852)	7,90 (.311)	12,55 (.494)	10,90 (.429)	6,94 (.273)	1,206 (.0475)	0,76 (.030)
DC	69,32 (2.729)	54,84 (2.159)	63,50 (2.500)	7,90 (.311)	12,55 (.494)	10,90 (.429)	6,94 (.273)	1,206 (.0475)	0,76 (.030)
DD	66,93 (2.635)	52,42 (2.064)	61,11 (2.406)	10,74 (.423)	15,37 (.605)	10,90 (.429)	6,94 (.273)	1,206 (.0475)	0,76 (.030)

Wrap Post Connector

Plug

Reader's Resource
For contact cavity arrangements, see page 224.
For P.C. hole patterns, see page 274.
For panel cutouts, see page 221.
For hardware views (Standard), see page 226.

Part Numbers

Shell Size	Layout	Military Part Numbers	
DE	9	DEMM9PF179	DEMM9PF179A
DA	15	DAMM15PF179	DAMM15PF179A
DB	25	DBMM25PF179	DBMM25PF179A
DC	37	DCMM37PF179	DCMM37PF179A
DD	50	DDMM50PF179	DDMM50PF179A

Shell Size	Layout	Commercial Part Numbers	
DE	9	DEM9PF179	DEM9PF179A
DA	15	DAM15PF179	DAM15PF179A
DB	25	DBM25PF179	DBM25PF179A
DC	37	DCM37PF179	DCM37PF179A
DD	50	DDM50PF179	DDM50PF179A

Modification Code	Number of Wraps	X ±0,51 (.020)
F179	2	9,60 (.378)
F179A	3	12,90 (.508)

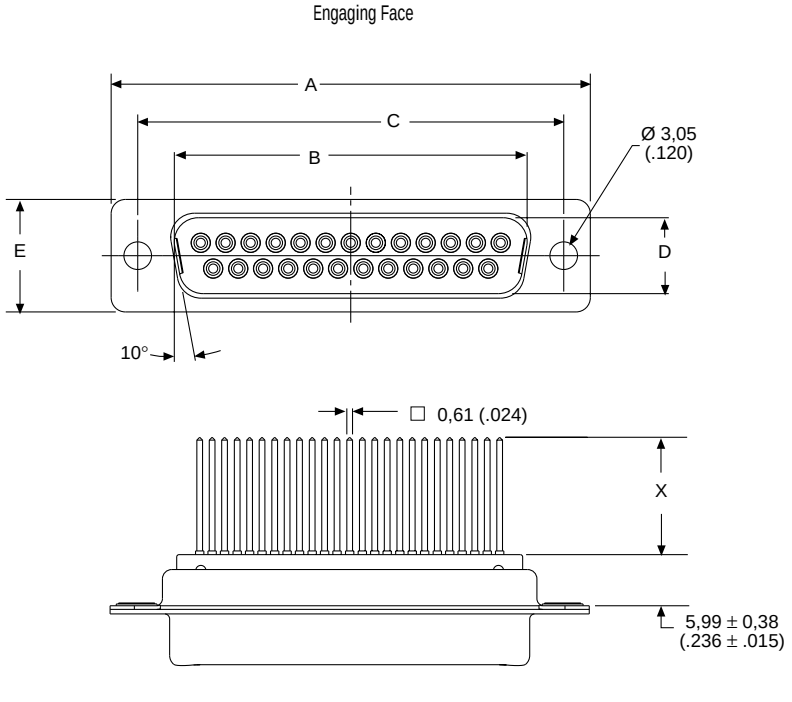

DD Configuration

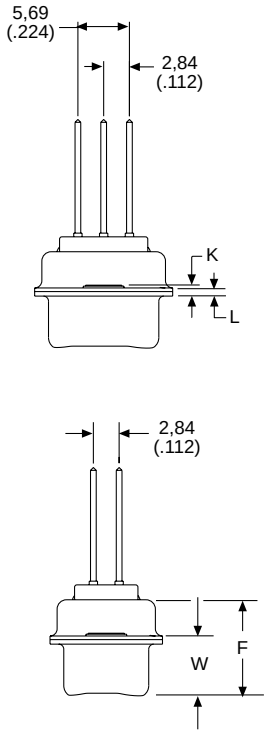

Dimensions

Shell Size	A ±0,38 (.015)	B ±0,13 (.005)	C ±0,13 (.005)	D ±0,13 (.005)	E ±0,38 (.015)	F ±0,25 (.010)	W ±0,368 (.0145)	W ±0,41 (.016)	K ±0,317 (.0125)	K ±0,25 (.010)	L ±0,25 (.010)
DE	30,81 (1.213)	16,92 (.666)	24,99 (.984)	8,36 (.329)	12,55 (.494)	10,72 (.422)	6,693 (.2635)	—	1,206 (.0475)	—	0,76 (.030)
DA	39,14 (1.541)	25,25 (.994)	33,32 (1.312)	8,36 (.329)	12,55 (.494)	10,72 (.422)	6,693 (.2635)	—	1,206 (.0475)	—	0,76 (.030)
DB	53,04 (2.088)	38,96 (1.534)	47,04 (1.852)	8,36 (.329)	12,55 (.494)	10,82 (.426)	—	6,84 (.269)	—	1,52 (.060)	0,99 (.039)
DC	69,32 (2.729)	55,42 (2.182)	63,50 (2.500)	8,36 (.329)	12,55 (.494)	10,82 (.426)	—	6,84 (.269)	—	1,52 (.060)	0,99 (.039)
DD	66,93 (2.635)	52,81 (2.079)	61,11 (2.406)	11,07 (.436)	15,37 (.605)	10,82 (.426)	—	6,84 (.269)	—	1,52 (.060)	0,99 (.039)

Dimensions are shown in mm (inch)
Dimensions subject to change

Wrap Post Connector

Receptacle

Reader's Resource

For contact cavity arrangements, see page 224.
For P.C. hole patterns, see page 274.
For panel cutouts, see page 221.
For hardware views (Standard), see page 226.

Part Numbers

Shell Size	Layout	Military Part Numbers	
DE	9	DEMM9SF179	DEMM9SF179A
DA	15	DAMM15SF179	DAMM15SF179A
DB	25	DBMM25SF179	DBMM25SF179A
DC	37	DCMM37SF179	DCMM37SF179A
DD	50	DDMM50SF179	DDMM50SF179A

Shell Size	Layout	Commercial Part Numbers	
DE	9	DEM9SF179	DEM9SF179A
DA	15	DAM15SF179	DAM15SF179A
DB	25	DBM25SF179	DBM25SF179A
DC	37	DCM37SF179	DCM37SF179A
DD	50	DDM50SF179	DDM50SF179A

Modification Code	Number of Wraps	X ±0,51 (.020)
F179	2	9,60 (.378)
F179A	3	12,90 (.508)

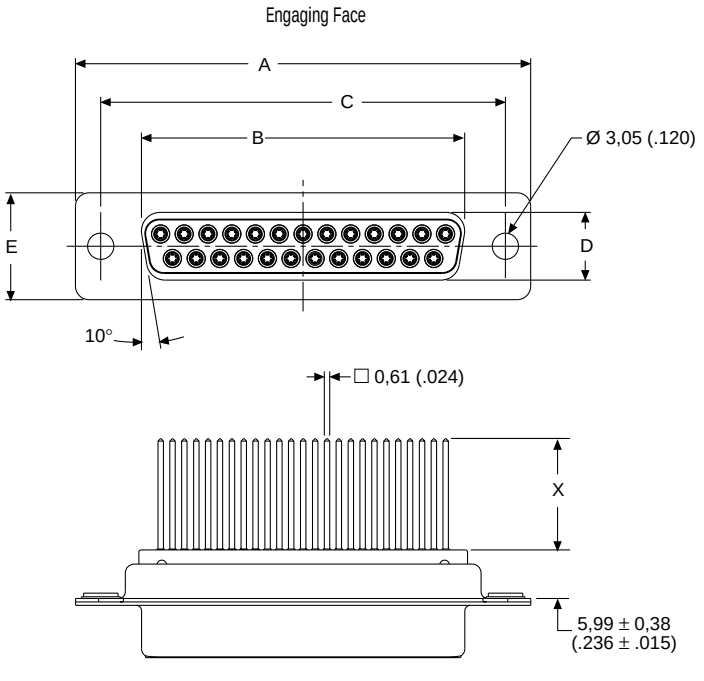

DD Configuration

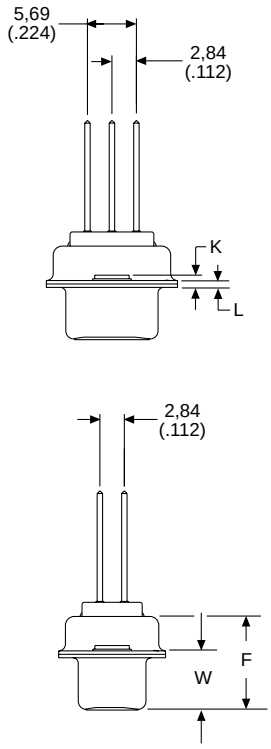

Dimensions

Shell Size	A ±0,38 (.015)	B ±0,13 (.005)	C ±0,13 (.005)	D ±0,13 (.005)	E ±0,38 (.015)	F ±0,25 (.010)	W ±0,38 (.015)	K ±0,318 (.0125)	L ±0,25 (.010)
DE	30,81 (1.213)	16,33 (.643)	24,99 (.984)	7,90 (.311)	12,55 (.494)	10,90 (.429)	6,94 (.273)	1,206 (.0475)	0,76 (.030)
DA	39,14 (1.541)	24,66 (.971)	33,32 (1.312)	7,90 (.311)	12,55 (.494)	10,90 (.429)	6,94 (.273)	1,206 (.0475)	0,76 (.030)
DB	53,04 (2.088)	38,38 (1.511)	47,04 (1.852)	7,90 (.311)	12,55 (.494)	10,90 (.429)	6,94 (.273)	1,206 (.0475)	0,76 (.030)
DC	69,32 (2.729)	54,84 (2.159)	63,50 (2.500)	7,90 (.311)	12,55 (.494)	10,90 (.429)	6,94 (.273)	1,206 (.0475)	0,76 (.030)
DD	66,93 (2.635)	52,42 (2.064)	61,11 (2.406)	10,74 (.423)	15,37 (.605)	10,90 (.429)	6,94 (.273)	1,206 (.0475)	0,76 (.030)

Solder Cup Connector

Plug

Reader's Resource

For contact cavity arrangements, see page 224.
For panel cutouts, see page 221.
For hardware views (Standard), see page 226.

Part Numbers

Shell Size	Layout	Military Part Numbers: Through Hole	Dual Float Mount	Clinch Nut #4-40 UNC
DE	9	DEMM9P	DEMMY9P	DEMME9P
DA	15	DAMM15P	DAMMY15P	DAMME15P
DB	25	DBMM25P	DBMMY25P	DBMME25P
DC	37	DCMM37P	DCMMY37P	DCMME37P
DD	50	DDMM50P	DDMMY50P	DDMME50P

Shell Size	Layout	Commercial Part Numbers: Through Hole	Dual Float Mount	Clinch Nut #4-40 UNC
DE	9	DEM9P	DEMY9P	DEME9P
DA	15	DAM15P	DAMY15P	DAME15P
DB	25	DBM25P	DBMY25P	DBME25P
DC	37	DCM37P	DCMY37P	DCME37P
DD	50	DDM50P	DDMY50P	DDME50P

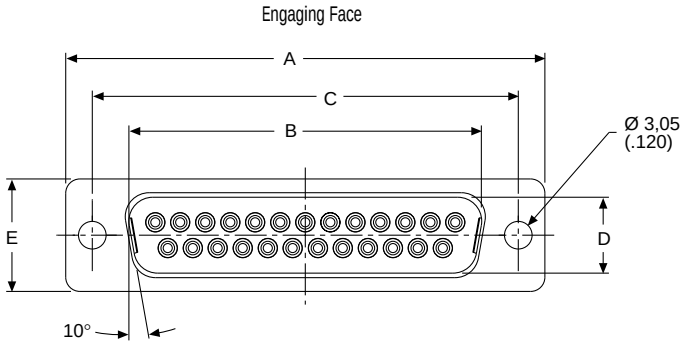

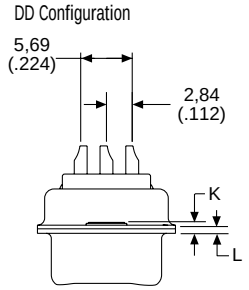

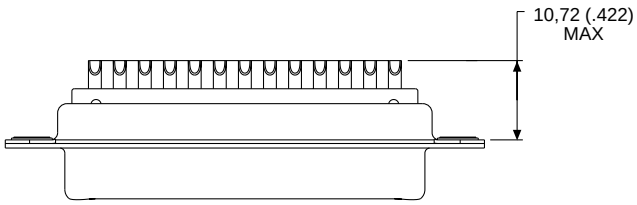

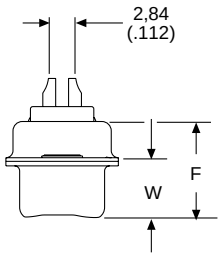

Dimensions

Shell Size	A ±0,38 (.015)	B ±0,13 (.005)	C ±0,13 (.005)	D ±0,13 (.005)	E ±0,38 (.015)	F ±0,25 (.010)	W ±0,368 (.0145)	W ±0,41 (.016)	K ±0,317 (.0125)	K ±0,25 (.010)	L ±0,25 (.010)
DE	30,81 (1.213)	16,92 (.666)	24,99 (.984)	8,36 (.329)	12,55 (.494)	10,72 (.422)	6,693 (.2635)	—	1,206 (.0475)	—	0.76 (.030)
DA	39,14 (1.541)	25,25 (.994)	33,32 (1.312)	8,36 (.329)	12,55 (.494)	10,72 (.422)	6,693 (.2635)	—	1,206 (.0475)	—	0,76 (.030)
DB	53,04 (2.088)	38,96 (1.534)	47,04 (1.852)	8,36 (.329)	12,55 (.494)	10,82 (.426)	—	6,84 (.269)	—	1,52 (.060)	0,99 (.039)
DC	69,32 (2.729)	55,42 (2.182)	63,50 (2.500)	8,36 (.329)	12,55 (.494)	10,82 (.426)	—	6,84 (.269)	—	1,52 (.060)	0,99 (.039)
DD	66,93 (2.635)	52,81 (2.079)	61,11 (2.406)	11,07 (.436)	15,37 (.605)	10,82 (.426)	—	6,84 (.269)	—	1,52 (.060)	0,99 (.039)

ITT Cannon

Dimensions are shown in mm (inch)
Dimensions subject to change

Solder Cup Connector

Receptacle

Reader's Resource

For contact cavity arrangements, see page 224.
For panel cutouts, see page 221.
For hardware views (Standard), see page 226.

Part Numbers

Shell Size	Layout	Military Part Numbers: Through Hole	Dual Float Mount	Clinch Nut #4-40 UNC
DE	9	DEMM9S	DEMMY9S	DEMME9S
DA	15	DAMM15S	DAMMY15S	DAMME15S
DB	25	DBMM25S	DBMMY25S	DBMME25S
DC	37	DCMM37S	DCMMY37S	DCMME37S
DD	50	DDMM50S	DDMMY50S	DDMME50S

Shell Size	Layout	Commercial Part Numbers: Through Hole	Dual Float Mount	Clinch Nut #4-40 UNC
DE	9	DEM9S	DEMY9S	DEME9S
DA	15	DAM15S	DAMY15S	DAME15S
DB	25	DBM25S	DBMY25S	DBME25S
DC	37	DCM37S	DCMY37S	DCME37S
DD	50	DDM50S	DDMY50S	DDME50S

Engaging Face

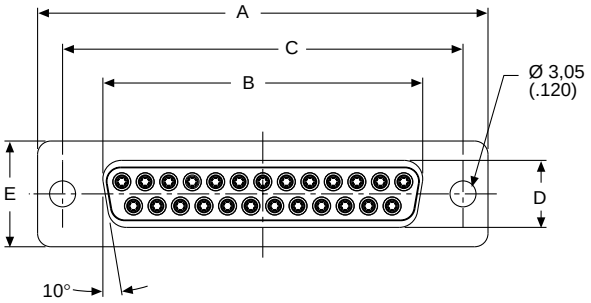

DD Configuration

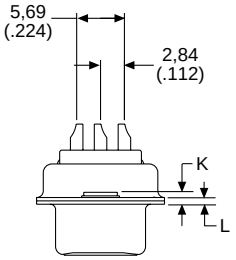

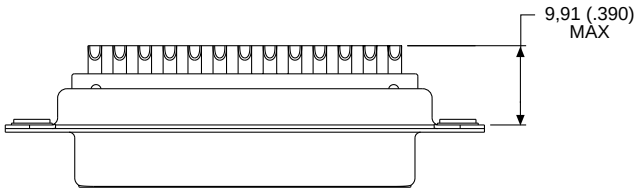

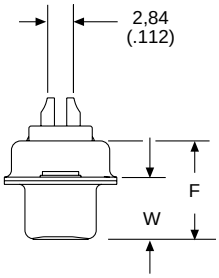

Dimensions

Shell Size	A ±0,38 (.015)	B ±0,13 (.005)	C ±0,13 (.005)	D ±0,13 (.005)	E ±0,38 (.015)	F ±0,25 (.010)	W ±0,38 (.015)	K ±0,318 (.0125)	L ±0,25 (.010)
DE	30,81 (1.213)	16,33 (.643)	24,99 (.984)	7,90 (.311)	12,55 (.494)	10,90 (.429)	6,94 (.273)	1,206 (.0475)	0,76 (.030)
DA	39,14 (1.541)	24,66 (.971)	33,32 (1.312)	7,90 (.311)	12,55 (.494)	10,90 (.429)	6,94 (.273)	1,206 (.0475)	0,76 (.030)
DB	53,04 (2.088)	38,38 (1.511)	47,04 (1.852)	7,90 (.311)	12,55 (.494)	10,90 (.429)	6,94 (.273)	1,206 (.0475)	0,76 (.030)
DC	69,32 (2.729)	54,84 (2.159)	63,50 (2.500)	7,90 (.311)	12,55 (.494)	10,90 (.429)	6,94 (.273)	1,206 (.0475)	0,76 (.030)
DD	66,93 (2.635)	52,42 (2.064)	61,11 (2.406)	10,74 (.423)	15,37 (.605)	10,90 (.429)	6,94 (.273)	1,206 (.0475)	0,76 (.030)

24308-Style Cross Reference

Military Part Number	ITT Cannon Part Number	Military Part Number	ITT Cannon Part Number	Military Part Number	ITT Cannon Part Number
M24308/1-1	DEMM9S	M24308/3-3	DBMM25P	M24308/6-261	DBMAMF25SNM
M24308/1-2	DAMM15S	M24308/3-4	DCMM37P	M24308/6-262	DCMAMF37SNM
M24308/1-3	DBMM25S	M24308/3-5	DDMM50P	M24308/6-263	DDMAMF50SNM
M24308/1-4	DCMM37S	M24308/3-12	DEMMF9P	M24308/6-270	DEMAMFT9SNM
M24308/1-5	DDMM50S	M24308/3-13	DAMMF15P	M24308/6-271	DAMAMFT15SNM
M24308/1-12	DEMMF9S	M24308/3-14	DBMMF25P	M24308/6-272	DBMAMFT25SNM
M24308/1-13	DAMMF15S	M24308/3-15	DCMMF37P	M24308/6-273	DCMAMFT37SNM
M24308/1-14	DBMMF25S	M24308/3-16	DDMMF50P	M24308/6-274	DDMAMFT50SNM
M24308/1-15	DCMMF37S	M24308/4-1	DEMAM9P	M24308/6-281	DEMAM9SNM-FO
M24308/1-16	DDMMF50S	M24308/4-2	DAMAM15P	M24308/6-282	DAMAM15SNM-FO
M24308/1-23	DEMMY9S	M24308/4-3	DBMAM25P	M24308/6-283	DBMAM25SNM-FO
M24308/1-24	DAMMY15S	M24308/4-4	DCMAM37P	M24308/6-284	DCMAM37SNM-FO
M24308/1-25	DBMMY25S	M24308/4-5	DDMAM50P	M24308/6-285	DDMAM50SNM-FO
M24308/1-26	DCMMY37S	M24308/4-6	DEMAMT9P	M24308/6-324	DEMAMF9SNM-FO
M24308/1-27	DDMMY50S	M24308/4-7	DAMAMT15P	M24308/6-325	DAMAMF15SNM-FO
M24308/2-1	DEMAM9S	M24308/4-8	DBMAMT25P	M24308/6-326	DBMAMF25SNM-FO
M24308/2-2	DAMAM15S	M24308/4-9	DCMAMT37P	M24308/6-327	DCMAMF37SNM-FO
M24308/2-3	DBMAM25S	M24308/4-10	DDMAMT50P	M24308/6-328	DDMAMF50SNM-FO
M24308/2-4	DCMAM37S	M24308/4-259	DEMAM9P-FO	M24308/6-453	DEMAMY9SNM
M24308/2-5	DDMAM50S	M24308/4-260	DAMAM15P-FO	M24308/6-454	DAMAMY15SNM
M24308/2-6	DEMAMT9S	M24308/4-261	DBMAMF25P-FO	M24308/6-455	DBMAMY25SNM
M24308/2-7	DAMAMT15S	M24308/4-262	DCMAM37P-FO	M24308/6-456	DCMAMY37SNM
M24308/2-8	DBMAMT25S	M24308/4-263	DDMAM50P-FO	M24308/6-457	DDMAMY50SNM
M24308/2-9	DCMAMT37S	M24308/4-302	DEMAMF9P	M24308/6-464	DDMEMYT9SNM
M24308/2-10	DDMAMT50S	M24308/4-303	DAMAMF15P	M24308/6-465	DAMAMYT15SNM
M24308/2-23	DEMAMF9S	M24308/4-304	DBMAMF25P	M24308/6-466	DBMAMYT25SNM
M24308/2-24	DAMAMF15S	M24308/4-305	DCMAMF37P	M24308/6-467	DCMAMYT37SNM
M24308/2-25	DBMAMF25S	M24308/4-306	DDMAMF50P	M24308/6-468	DDMAMYT50SNM
M24308/2-26	DCMAMF37S	M24308/4-313	DEMAMFT9P	M24308/6-491	DEMAMY9SNM-FO
M24308/2-27	DDMAMF50S	M24308/4-314	DAMAMFT15P	M24308/6-492	DAMAMY15SNM-FO
M24308/2-34	DEMAMFT9S	M24308/4-315	DBMAMFT25P	M24308/6-493	DBMAMY25SNM-FO
M24308/2-35	DAMAMFT15S	M24308/4-316	DCMAMFT37P	M24308/6-494	DCMAMY37SNM-FO
M24308/2-36	DBMAMFT25S	M24308/4-317	DDMAMFT50P	M24308/6-495	DDMAMY50SNM-FO
M24308/2-37	DCMAMFT37S	M24308/4-324	DEMAMF9P-FO	M24308/7-1	DEMM9PNM
M24308/2-38	DDMAMFT50S	M24308/4-325	DAMAMF15P-FO	M24308/7-2	DAMM15PNM
M24308/2-281	DEMAM9S-FO	M24308/4-326	DBMAMF25P-FO	M24308/7-3	DBMM25PNM
M24308/2-282	DAMAM15S-FO	M24308/4-327	DCMAMF37P-FO	M24308/7-4	DCMM37PNM
M24308/2-283	DBMAM25S-FO	M24308/4-328	DDMAMF50P-FO	M24308/7-5	DDMM50PNM
M24308/2-284	DCMAM37S-FO	M24308/5-1	DEMM9SNM	M24308/7-12	DEMMF9PNM
M24308/2-285	DDMAM50S-FO	M24308/5-2	DAMM15SNM	M24308/7-13	DAMMF15PNM
M24308/2-292	DEMAMF9S-FO	M24308/5-3	DBMM25SNM	M24308/7-14	DBMMF25PNM
M24308/2-293	DAMAMF15S-FO	M24308/5-4	DCMM37SNM	M24308/7-15	DCMMF37PNM
M24308/2-294	DBMAMF25S-FO	M24308/5-5	DDMM50SNM	M24308/7-16	DDMMF50PNM
M24308/2-295	DCMAMF37S-FO	M24308/5-12	DEMMF9SNM	M24308/8-1	DEMAM9PNM
M24308/2-296	DDMAMF50S-FO	M24308/5-13	DAMMF15SNM	M24308/8-2	DAMAM15PNM
M24308/2-335	DBMAMR25S	M24308/5-14	DBMMF25SNM	M24308/8-3	DBMAM25PNM
M24308/2-336	DCMAMR37S	M24308/5-15	DCMMF37SNM	M24308/8-4	DCMAM37PNM
M24308/2-341	DAMAMR15S	M24308/5-16	DDMMF50SNM	M24308/8-5	DDMAM50PNM
M24308/2-342	DEMAMY9S	M24308/5-23	DDMMY9SNM	M24308/8-6	DEMAMT9PNM
M24308/2-343	DAMAMY15S	M24308/5-24	DAMMY15SNM	M24308/8-7	DAMAMT15PNM
M24308/2-344	DBMAMY25S	M24308/5-25	DBMMY25SNM	M24308/8-8	DBMAMT25PNM
M24308/2-345	DCMAMY37S	M24308/5-26	DCMMY37SNM	M24308/8-9	DCMAMT37PNM
M24308/2-346	DDMAMY50S	M24308/5-27	DDMMY50SNM	M24308/8-10	DDMAMT50PNM
M24308/2-353	DEMAMYT9S	M24308/6-1	DEMAM9SNM	M24308/8-259	DEMAM9PNM-FO
M24308/2-354	DAMAMYT15S	M24308/6-2	DAMAM15SNM	M24308/8-260	DAMAM15PNM-FO
M24308/2-355	DBMAMYT25S	M24308/6-3	DBMAM25SNM	M24308/8-261	DBMAM25PNM-FO
M24308/2-356	DCMAMYT37S	M24308/6-4	DCMAM37SNM	M24308/8-262	DCMAM37PNM-FO
M24308/2-357	DDMAMYT50S	M24308/6-5	DDMAM50SNM	M24308/8-263	DDMAM50PNM-FO
M24308/2-482	DEMAMY9S-FO	M24308/6-6	DEMAMT9SNM	M24308/8-302	DEMAMF9PNM
M24308/2-483	DEMAMY15S-FO	M24308/6-7	DAMAMT15SNM	M24308/8-303	DAMAMF15PNM
M24308/2-484	DEMAMY25S-FO	M24308/6-8	DBMAMT25SNM	M24308/8-304	DBMAMF25PNM
M24308/2-485	DCMAMY37S-FO	M24308/6-9	DCMAMT37SNM	M24308/8-305	DCMAMF37PNM
M24308/2-486	DDMAMY50S-FO	M24308/6-10	DDMAMT50SNM	M24308/8-306	DDMAMF50PNM
M24308/3-1	DEMM9P	M24308/6-259	DEMAMF9SNM	M24308/8-313	DEMAMFT9PNM
M24308/3-2	DAMM15P	M24308/6-260	DAMAMF15SNM	M24308/8-314	DAMAMFT15PNM

Dimensions are shown in mm (inch)
Dimensions subject to change

24308-Style Cross Reference

Military Part Number	ITT Cannon Part Number	Military Part Number	ITT Cannon Part Number	Military Part Number	ITT Cannon Part Number
M24308/8-315	DBMAMFT25PNM	M24308/23-21	DBMM25SX	M24308/24-15	DBMM25PH
M24308/8-316	DCMAMFT37PNM	M24308/23-22	DCMM37SX	M24308/24-16	DCMM37PH
M24308/8-317	DDMAMFT50PNM	M24308/23-23	DDMM50SX	M24308/24-17	DDMM50PH
M24308/8-324	DEMAMF9PNM-FO	M24308/23-25	DEMM9SD	M24308/24-19	DEMM9PX
M24308/8-325	DAMAMF15PNM-FO	M24308/23-26	DAMM15SD	M24308/24-20	DAMM15PX
M24308/8-326	DBMAMF25PNM-FO	M24308/23-27	DBMM25SD	M24308/24-21	DBMM25PX
M24308/8-327	DCMAMF37PNM-FO	M24308/23-28	DCMM37SD	M24308/24-22	DCMM37PX
M24308/8-328	DDMAMF50PNM-FO	M24308/23-29	DDMM50SD	M24308/24-23	DDMM50PX
M24308/9-1	DEH9P002	M24308/23-31	DEMM9SL	M24308/24-25	DEMM9PD
M24308/9-2	DAH15P002	M24308/23-32	DAMM15SL	M24308/24-26	DAMM15PD
M24308/9-3	DBH25P002	M24308/23-33	DBMM25SL	M24308/24-27	DBMM25PD
M24308/9-4	DCH37P002	M24308/23-34	DCMM37SL	M24308/24-28	DCMM37PD
M24308/9-5	DDH50P002	M24308/23-35	DDMM50SL	M24308/24-29	DDMM50PD
M24308/9-6	DEH9P001	M24308/23-37	DEMM9SA	M24308/24-31	DEMM9PL
M24308/9-7	DAH15P001	M24308/23-38	DAMM15SA	M24308/24-32	DAMM15PL
M24308/9-8	DBH25P001	M24308/23-39	DBMM25SA	M24308/24-33	DBMM25PL
M24308/9-9	DCH37P001	M24308/23-40	DCMM37SA	M24308/24-34	DCMM37PL
M24308/9-10	DDH50P001	M24308/23-41	DDMM50SA	M24308/24-35	DDMM50PL
M24308/9-11	DEH9P202	M24308/23-43	DEMM9SG	M24308/24-37	DEMM9PA
M24308/9-12	DAH15P202	M24308/23-44	DAMM15SG	M24308/24-38	DAMM15PA
M24308/9-13	DBH25P202	M24308/23-45	DBMM25SG	M24308/24-39	DBMM25PA
M24308/9-14	DCH37P202	M24308/23-46	DCMM37SG	M24308/24-40	DCMM37PA
M24308/9-15	DDH50P202	M24308/23-47	DDMM50SG	M24308/24-41	DDMM50PA
M24308/9-16	DEH9P201	M24308/23-49	DEMM9SS	M24308/24-43	DEMM9PG
M24308/9-17	DAH15P201	M24308/23-50	DAMM15SS	M24308/24-44	DAMM15PG
M24308/9-18	DBH25P201	M24308/23-51	DBMM25SS	M24308/24-45	DBMM25PG
M24308/9-19	DCH37P201	M24308/23-52	DCMM37SS	M24308/24-46	DCMM37PG
M24308/9-20	DDH50P201	M24308/23-53	DDMM50SS	M24308/24-47	DDMM50PG
M24308/23-1	DEMM9SM	M24308/23-55	DEMM9SW	M24308/24-49	DEMM9PS
M24308/23-2	DAMM15SM	M24308/23-56	DAMM15SW	M24308/24-50	DAMM15PS
M24308/23-3	DBMM25SM	M24308/23-57	DBMM25SW	M24308/24-51	DBMM25PS
M24308/23-4	DCMM37SM	M24308/23-58	DCMM37SW	M24308/24-52	DCMM37PS
M24308/23-5	DDMM50SM	M24308/23-59	DDMM50SW	M24308/24-53	DDMM50PS
M24308/23-7	DEMM9SZ	M24308/24-1	DEMM9PM	M24308/24-55	DEMM9PW
M24308/23-8	DAMM15SZ	M24308/24-2	DAMM15PM	M24308/24-56	DAMM15PW
M24308/23-9	DBMM25SZ	M24308/24-3	DBMM25PM	M24308/24-57	DBMM25PW
M24308/23-10	DCMM37SZ	M24308/24-4	DCMM37PM	M24308/24-58	DCMM37PW
M24308/23-11	DDMM50SZ	M24308/24-5	DDMM50PM	M24308/24-59	DDMM50PW
M24308/23-13	DEMM9SH	M24308/24-7	DEMM9PZ	M24308/26-1	D20418-2
M24308/23-14	DAMM15SH	M24308/24-8	DAMM15PZ	M24308/26-2	D20418-39
M24308/23-15	DBMM25SH	M24308/24-9	DBMM25PZ		
M24308/23-16	DCMM37SH	M24308/24-10	DCMM37PZ		
M24308/23-17	DDMM50SH	M24308/24-11	DDMM50PZ		
M24308/23-19	DEMM9SX	M24308/24-13	DEMM9PH		
M24308/23-20	DAMM15SX	M24308/24-14	DAMM15PH		

MIL-C-39029 Crimp Contacts

Military Part Number	ITT Cannon Part Number	Contact Size	Contact Style	Product Line	MIL Specification
M39029/63-368	031-1007-078	20	Socket	D*MA	24308-Style
M39029/64-369	330-5291-097	20	Pin	D*MA	24308-Style

HE501/D*M Cross Reference

HE501 Part Number	ITT Cannon Part Number	HE501 Part Number	ITT Cannon Part Number	HE501 Part Number	ITT Cannon Part Number
HE501N09AS3	DEM9S	HE501N9KS33	DEM9SF179A	HE501N09YP4	DEM9POL3
HE501N15AS3	DAM15S	HE501N15KS33	DAM15SF179A	HE501N15YP4	DAM15POL3
HE501N25AS3	DBM25S	HE501N25KS33	DBM25SF179A	HE501N25YP4	DBM25POL3
HE501N37AS3	DCM37S	HE501N37KS33	DCM37SF179A	HE501N37YP4	DCM37POL3
HE501N50AS3	DDM50S	HE501N50KS33	DDM50SF179A	HE501N50YP4	DDM50POL3
HE501F09AS3	DEMY9S	HE501N09AP	DEM9P	HE501P09VP6E	DEM9P1A5N
HE501F15AS3	DAMY15S	HE501N15AP	DAM15P	HE501P15VP6E	DAM15P1A5N
HE501F25AS3	DBMY25S	HE501N25AP	DBM25P	HE501P25VP6E	DBM25P1A5N
HE501F37AS3	DCMY37S	HE501N37AP	DCM37P	HE501P37VP6E	DCM39P1A5N
HE501F50AS3	DDMY50S	HE501N50AP	DDM50P	HE501P50VP6E	DDM50P1A5N
HE501N09YS43	DEM9SOL3	HE501F09AP	DEMY9P	HE501N9KP3	DEM9PF179A
HE501N15YS43	DAM15SOL3	HE501F15AP	DAMY15P	HE501N15KP3	DAM15PF179A
HE501N25YS43	DBM25SOL3	HE501F25AP	DBMY25P	HE501N25KP3	DBM25PF179A
HE501N37YS43	DCM37SOL3	HE501F37AP	DCMY37P	HE501N37KP3	DCM37PF179A
HE501N50YS43	DDM50SOL3	HE501F50AP	DDMY50P	HE501N50KP3	DDM50PF179A
HE501P09VS63E	DEM9S1A5N				
HE501P15VS63E	DAM15SA15N				
HE501P25VS63E	DBM25S1A5N				
HE501P37VS63E	DCM37S1A5N				
HE501P50VS63E	DDM50S1A5N				

Dimensions are shown in mm (inch)
Dimensions subject to change

Coaxial 90° PCB (Sizes DE-DC)

Plug

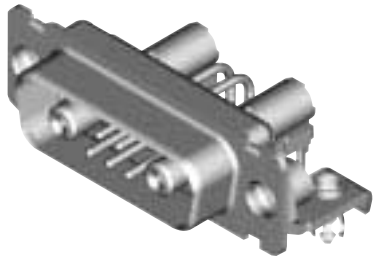

Reader's Resource

For contact cavity arrangements, see page 222.
For P.C. hole patterns, see pages 228-229.
For panel cutouts, see page 221.
For hardware views (Standard), see page 226.
For alternate bracket configuration (when connectors are supplied without boardlocks), see page 226.
For alternate 50 Ohm coaxial configuration, see page 225.

75 Ohm Part Numbers* with Bracket and Rivnut #4-40 UNC

Shell Size	Layout	Part Number Without Screw Locks Without Boardlocks	Part Number Without Screw Locks With Boardlocks	Part Number With Screw Locks Without Boardlocks	Part Number With Screw Locks With Boardlocks
DE	5W1	DEMMP5C1PJ	DEMMC5C1PJ	DEMMD5C1PJ	DEMMG5C1PJ
DA	7W2	DAMMP7C2PJ	DAMMC7C2PJ	DAMMD7C2PJ	DAMMG7C2PJ
DA	11W1	DAMMP11C1PJ	DAMMC11C1PJ	DAMMD11C1PJ	DAMMG11C1PJ
DA	3W3	DAMMP3C3PJ	DAMMC3C3PJ	DAMMD3C3PJ	DAMMG3C3PJ
DA	3WK3♣	DAMMP3CK3PJTM	DAMMC3CK3PJTM	DAMMD3CK3PJTM	DAMMG3CK3PJTM
DB	5W5	DBMMP5C5PJ	DBMMC5C5PJ	DBMMD5C5PJ	DBMMG5C5PJ
DB	9W4	DBMMP9C4PJ	DBMMC9C4PJ	DBMMD9C4PJ	DBMMG9C4PJ
DB	13W3	DBMMP13C3PJ	DBMMC13C3PJ	DBMMD13C3PJ	DBMMG13C3PJ
DB	17W2	DBMMP17C2PJ	DBMMC17C2PJ	DBMMD17C2PJ	DBMMG17C2PJ
DB	21W1	DBMMP21C1PJ	DBMMC21C1PJ	DBMMD21C1PJ	DBMMG21C1PJ
DC	8W8	DCMMP8C8PJ	DCMMC8C8PJ	DCMMD8C8PJ	DCMMG8C8PJ
DC	13W6	DCMMP13C6PJ	DCMMC13C6PJ	DCMMD13C6PJ	DCMMG13C6PJ
DC	17W5	DCMMP17C5PJ	DCMMC17C5PJ	DCMMD17C5PJ	DCMMG17C5PJ
DC	21WA4	DCMMP21CA4PJ	DCMMC21CA4PJ	DCMMD21CA4PJ	DCMMG21CA4PJ
DC	25W3	DCMMP25C3PJ	DCMMC25C3PJ	DCMMD25C3PJ	DCMMG25C3PJ
DC	27W2	DCMMP27C2PJ	DCMMC27C2PJ	DCMMD27C2PJ	DCMMG27C2PJ

Notes: *For 50 Ohm Coaxial substitute X for C. Example: DEMMP5X1PJ
For DD shell size, see page 148.
♣ Keyed

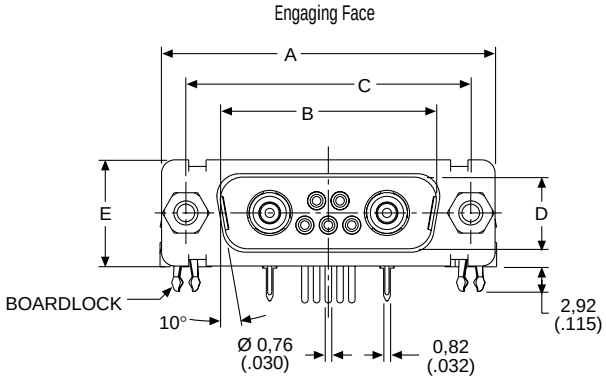

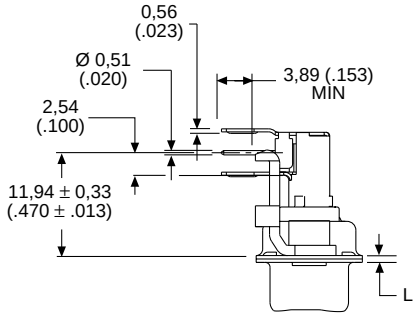

Screw lock, boardlock, and signal contacts removed for clarity

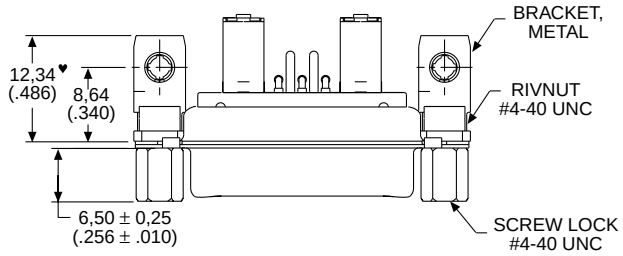

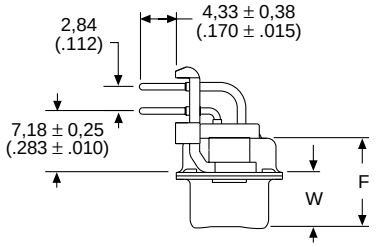

Screw lock, boardlock, and coaxial contact removed for clarity

Note: ♥ Dimension varies with alternate bracket configuration, see Reader's Resource page 226.

Dimensions

Shell Size	A ±0,38 (.015)	B ±0,13 (.005)	C ±0,13 (.005)	D ±0,13 (.005)	E ±0,38 (.015)	F ±0,25 (.010)	W ±0,368 (.0145)	W ±0,41 (.016)	L ±0,25 (.010)
DE	30,81 (1.213)	16,92 (.666)	24,99 (.984)	8,36 (.329)	12,55 (.494)	10,72 (.422)	6,693 (.2635)	—	0,76 (.030)
DA	39,14 (1.541)	25,25 (.994)	33,32 (1.312)	8,36 (.329)	12,55 (.494)	10,72 (.422)	6,693 (.2635)	—	0,76 (.030)
DB	53,04 (2.088)	38,96 (1.534)	47,04 (1.852)	8,36 (.329)	12,55 (.494)	10,82 (.426)	—	6,84 (.269)	0,99 (.039)
DC	69,32 (2.729)	55,42 (2.182)	63,50 (2.500)	8,36 (.329)	12,55 (.494)	10,82 (.426)	—	6,84 (.269)	0,99 (.039)

Dimensions are shown in mm (inch)
Dimensions subject to change

Coaxial 90° PCB (Sizes DE-DC)

Receptacle

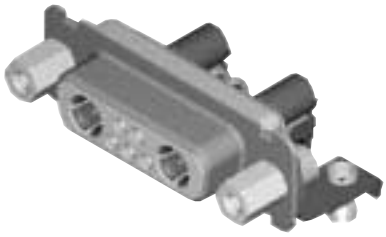

Reader's Resource

For contact cavity arrangements, see page 223.
For P.C. hole patterns, see pages 231-232.
For panel cutouts, see page 221.
For hardware views (Standard), see page 226.
For alternate bracket configuration (when connectors are supplied without boardlocks), see page 226.
For alternate 50 Ohm coaxial configuration, see page 225.

75 Ohm Part Numbers* with Bracket and Rivnut #4-40 UNC

Shell Size	Layout	Part Number Without Screw Locks Without Boardlocks	Part Number Without Screw Locks With Boardlocks	Part Number With Screw Locks Without Boardlocks	Part Number With Screw Locks With Boardlocks
DE	5W1	DEMMP5C1SJ	DEMMC5C1SJ	DEMMD5C1SJ	DEMMG5C1SJ
DA	7W2	DAMMP7C2SJ	DAMMC7C2SJ	DAMMD7C2SJ	DAMMG7C2SJ
DA	11W1	DAMMP11C1SJ	DAMMC11C1SJ	DAMMD11C1SJ	DAMMG11C1SJ
DA	3W3	DAMMP3C3SJ	DAMMC3C3SJ	DAMMD3C3SJ	DAMMG3C3SJ
DA	3WK3♣	DAMMP3CK3SJTM	DAMMC3CK3SJTM	DAMMD3CK3SJTM	DAMMG3CK3SJTM
DB	5W5	DBMMP5C5SJ	DBMMC5C5SJ	DBMMD5C5SJ	DBMMG5C5SJ
DB	9W4	DBMMP9C4SJ	DBMMC9C4SJ	DBMMD9C4SJ	DBMMG9C4SJ
DB	13W3	DBMMP13C3SJ	DBMMC13C3SJ	DBMMD13C3SJ	DBMMG13C3SJ
DB	17W2	DBMMP17C2SJ	DBMMC17C2SJ	DBMMD17C2SJ	DBMMG17C2SJ
DB	21W1	DBMMP21C1SJ	DBMMC21C1SJ	DBMMD21C1SJ	DBMMG21C1SJ
DC	8W8	DCMMP8C8SJ	DCMMC8C8SJ	DCMMD8C8SJ	DCMMG8C8SJ
DC	13W6	DCMMP13C6SJ	DCMMC13C6SJ	DCMMD13C6SJ	DCMMG13C6SJ
DC	17W5	DCMMP17C5SJ	DCMMC17C5SJ	DCMMD17C5SJ	DCMMG17C5SJ
DC	21WA4	DCMMP21CA4SJ	DCMMC21CA4SJ	DCMMD21CA4SJ	DCMMG21CA4SJ
DC	25W3	DCMMP25C3SJ	DCMMC25C3SJ	DCMMD25C3SJ	DCMMG25C3SJ
DC	27W2	DCMMP27C2SJ	DCMMC27C2SJ	DCMMD27C2SJ	DCMMG27C2SJ

Notes: *For 50 Ohm Coaxial substitute X for C. Example: DEMMP5X1SJ
For DD shell size, see page 149.
♣ Keyed

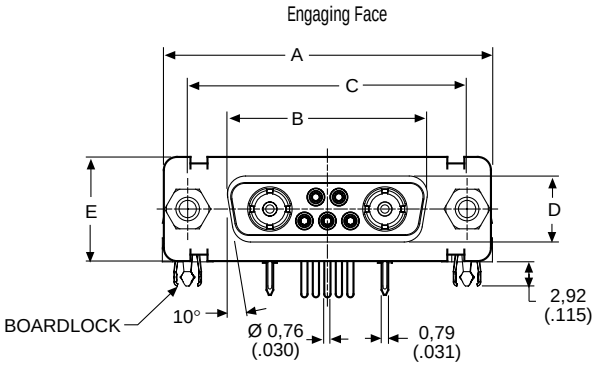

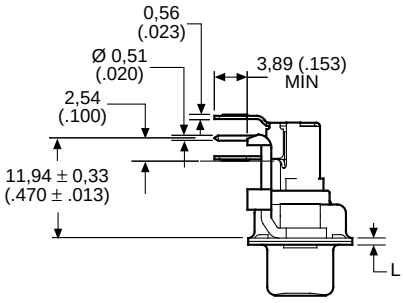

Screw lock, boardlock and signal contacts removed for clarity

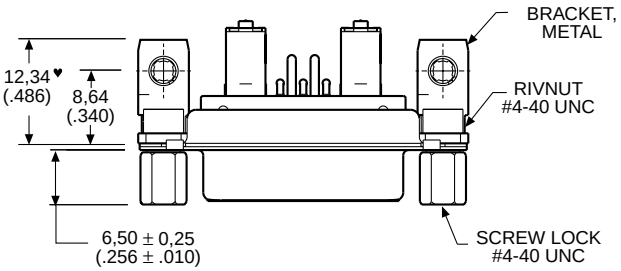

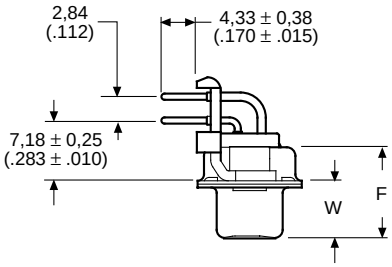

Screw lock, boardlock and coaxial contact removed for clarity

Note: ♥ Dimension varies with altenate bracket configuration, see Reader's Resource page 225.

Dimensions

Shell Size	A ±0,38 (.015)	B ±0,13 (.005)	C ±0,13 (.005)	D ±0,13 (.005)	E ±0,38 (.015)	F ±0,25 (.010)	W ±0,38 (.015)	L ±0,25 (.010)
DE	30,81 (1.213)	16,33 (.643)	24,99 (.984)	7,90 (.311)	12,55 (.494)	10,90 (.429)	6,94 (.273)	0,76 (.030)
DA	39,14 (1.541)	24,66 (.971)	33,32 (1.312)	7,90 (.311)	12,55 (.494)	10,90 (.429)	6,94 (.273)	0,76 (.030)
DB	53,04 (2.088)	38,38 (1.511)	47.04 (1.852)	7,90 (.311)	12,55 (.494)	10,90 (.429)	6,94 (.273)	0,76 (.030)
DC	69,32 (2.729)	54,84 (2.159)	63,50 (2.500)	7,90 (.311)	12,55 (.494)	10,90 (.429)	6,94 (.273)	0,76 (.030)

Coaxial 90° PCB (Size DD)

Plug

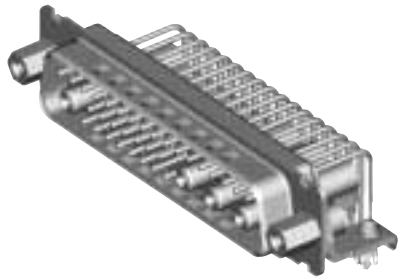

75 Ohm Part Numbers* with Metal Bracket and Rivnut #4-40 UNC

Shell Size	Layout	Part Number Without Screw Locks Without Boardlocks	Part Number Without Screw Locks With Boardlocks	Part Number With Screw Locks Without Boardlocks	Part Number With Screw Locks With Boardlocks
DD	24W7	DDMMP24C7PJ	DDMMC24C7PJ	DDMMD24C7PJ	DDMMG24C7PJ
DD	36W4	DDMMP36C4PJ	DDMMC36C4PJ	DDMMD36C4PJ	DDMMG36C4PJ
DD	43W2	DDMMP43C2PJ	DDMMC43C2PJ	DDMMD43C2PJ	DDMMG43C2PJ
DD	47W1	DDMMP47C1PJ	DDMMC47C1PJ	DDMMD47C1PJ	DDMMG47C1PJ

Note: *For 50 Ohm Coaxial substitute X for C. Example: DDMMP24X7PJ

Reader's Resource

For contact cavity arrangements, see page 222.
For P.C. hole patterns, see page 230.
For panel cutouts, see page 221.
For hardware views (Standard), see page 226.
For alternate bracket configuration (when connectors are supplied without boardlocks), see page 226.
For alternate 50 Ohm coaxial configuration, see page 225.

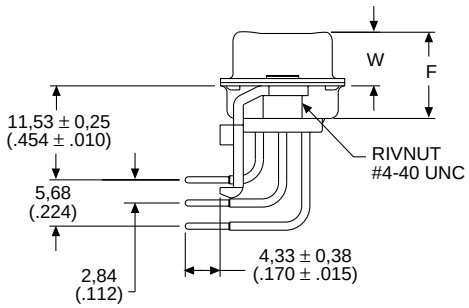

Screw lock, boardlock, and coaxial contact removed for clarity

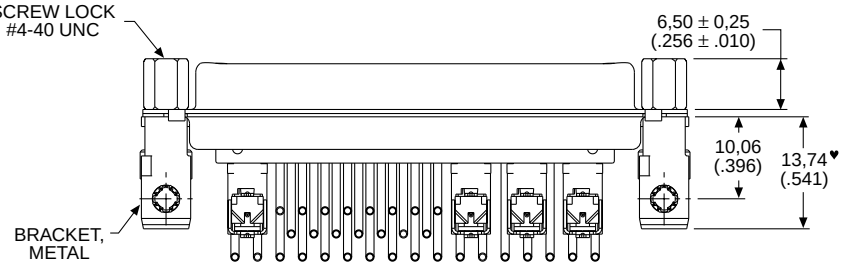

Engaging Face

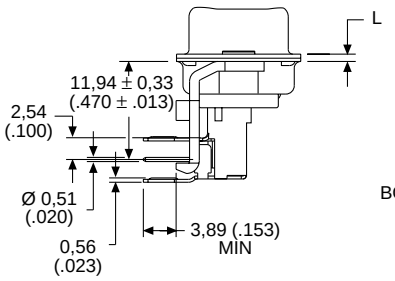

Screw lock, boardlock, and signal contacts removed for clarity

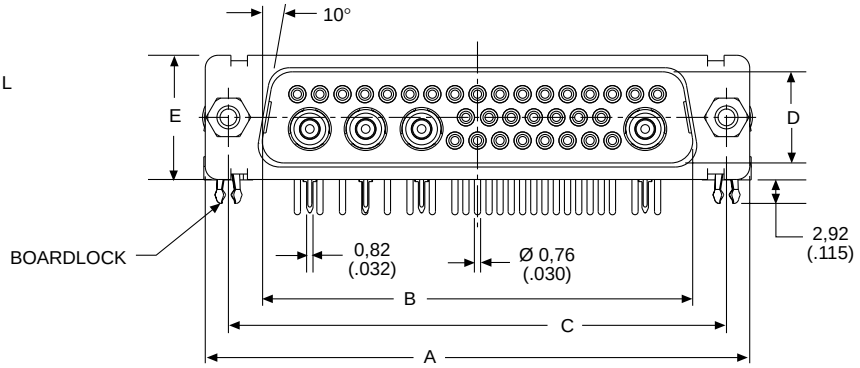

Note: ♥ Dimension varies with alternate bracket configuration, see Reader's Resource page 226.

Dimensions

Shell Size	A ±0,38 (.015)	B ±0,13 (.005)	C ±0,13 (.005)	D ±0,13 (.005)	E ±0,38 (.015)	F ±0,25 (.010)	W ±0,41 (.016)	L ±0,25 (.010)
DD	66,93 (2.635)	52,81 (2.079)	61,11 (2.406)	11,07 (.436)	15,37 (.605)	10,82 (.426)	6,84 (.269)	0,99 (.039)

Dimensions are shown in mm (inch)
Dimensions subject to change

Coaxial 90° PCB (Size DD)

Receptacle

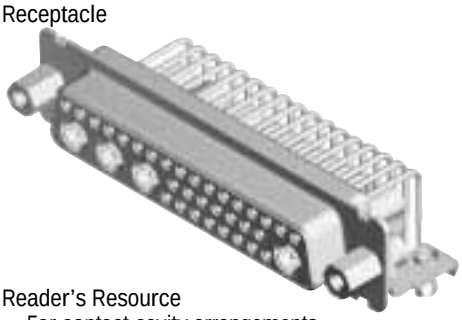

Reader's Resource

For contact cavity arrangements, see page 223.
For P.C. hole patterns, see page 233.
For panel cutouts, see page 221.
For hardware views (Standard), see page 226.
For alternate bracket configuration (when connectors are supplied without boardlocks), see page 226.
For alternate 50 Ohm coaxial configuration, see page 225.

75 Ohm Part Numbers* with Metal Bracket and Rivnut #4-40 UNC

Shell Size	Layout	Part Number Without Screw Locks Without Boardlocks	Part Number Without Screw Locks With Boardlocks	Part Number With Screw Locks Without Boardlocks	Part Number With Screw Locks With Boardlocks
DD	24W7	DDMMP24C7SJ	DDMMC24C7SJ	DDMMD24C7SJ	DDMMG24C7SJ
DD	36W4	DDMMP36C4SJ	DDMMC36C4SJ	DDMMD36C4SJ	DDMMG36C4SJ
DD	43W2	DDMMP43C2SJ	DDMMC43C2SJ	DDMMD43C2SJ	DDMMG43C2SJ
DD	47W1	DDMMP47C1SJ	DDMMC47C1SJ	DDMMD47C1SJ	DDMMG47C1SJ

Note: *For 50 Ohm Coaxial substitute X for C. Example: DDMMG36X4SJ

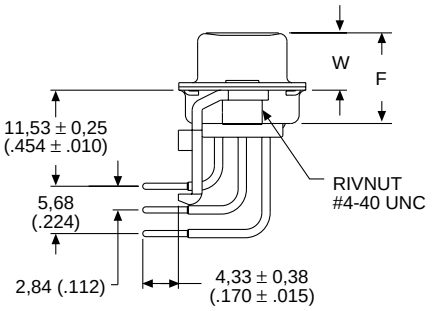

Screw lock, boardlock, and coaxial contacts removed for clarity

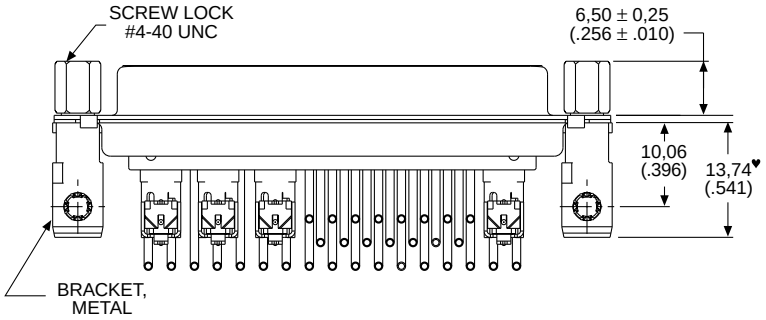

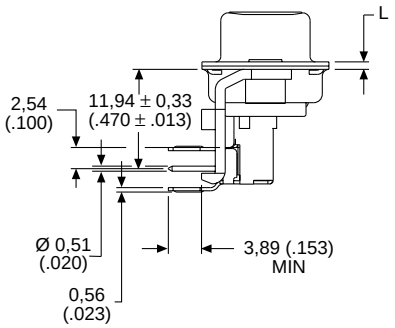

Screw lock, boardlock, and signal contacts removed for clarity

Engaging Face

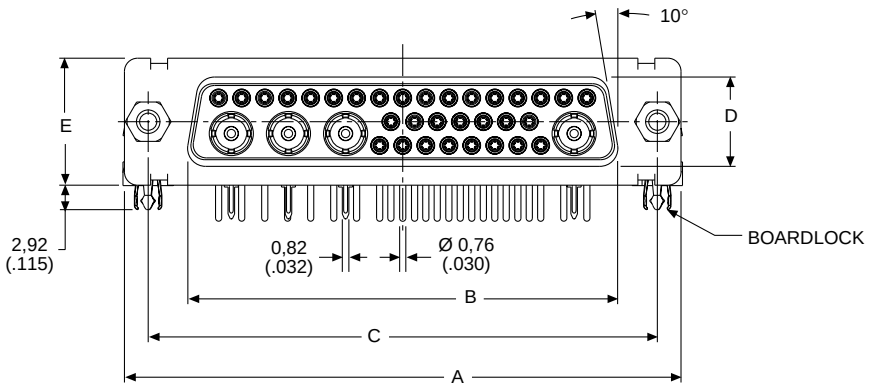

Note: ♥ Dimension varies with alternate bracket configuration, see Reader's Resource page 226.

Dimensions

Shell Size	A ±0,38 (.015)	B ±0,13 (.005)	C ±0,13 (.005)	D ±0,13 (.005)	E ±0,38 (.015)	F ±0,25 (.010)	W ±0,38 (.015)	L ±0,25 (.010)
DD	66,93 (2.635)	52,42 (2.064)	61,11 (2.406)	10,74 (.423)	15,37 (.605)	10,90 (.429)	6,94 (.273)	0,76 (.030)

Coaxial Straight PCB (Sizes DE-DC)

Plug

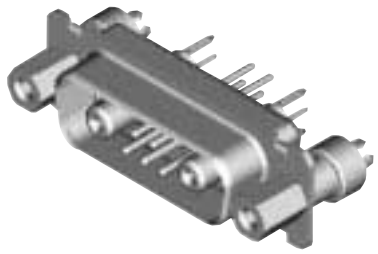

Reader's Resource
For contact cavity arrangements, see page 222.
For P.C. hole patterns, see pages 238-239.
For panel cutouts, see page 221.
For hardware views (Standard), see page 226.
For alternate 50 Ohm coaxial configuration, see page 225.

75 Ohm Part Numbers* with Standoff #4-40 UNC

Shell Size	Layout	Part Number Without Screw Locks Without Boardlocks	Part Number Without Screw Locks With Boardlocks	Part Number With Screw Locks With Boardlocks
DE	5W1	DEMMV5C1PN	DEMMZ5C1PN	DEMMN5C1PN
DA	7W2	DAMMV7C2PN	DAMMZ7C2PN	DAMMN7C2PN
DA	11W1	DAMMV11C1PN	DAMMZ11C1PN	DAMMN11C1PN
DA	3W3	DAMMV3C3PN	DAMMZ3C3PN	DAMMN3C3PN
DA	3WK3♣	DAMMV3CK3PNTM	DAMMZ3CK3PNTM	DAMMN3CK3PNTM
DB	5W5	DBMMV5C5PN	DBMMZ5C5PN	DBMMN5C5PN
DB	9W4	DBMMV9C4PN	DBMMZ9C4PN	DBMMN9C4PN
DB	13W3	DBMMV13C3PN	DBMMZ13C3PN	DBMMN13C3PN
DB	17W2	DBMMV17C2PN	DBMMZ17C2PN	DBMMN17C2PN
DB	21W1	DBMMV21C1PN	DBMMZ21C1PN	DBMMN21C1PN
DC	8W8	DCMMV8C8PN	DCMMZ8C8PN	DCMMN8C8PN
DC	13W6	DCMMV13C6PN	DCMMZ13C6PN	DCMMN13C6PN
DC	17W5	DCMMV17C5PN	DCMMZ17C5PN	DCMMN17C5PN
DC	21WA4	DCMMV21CA4PN	DCMMZ21CA4PN	DCMMN21CA4PN
DC	25W3	DCMMV25C3PN	DCMMZ25C3PN	DCMMN25C3PN
DC	27W2	DCMMV27C2PN	DCMMZ27C2PN	DCMMN27C2PN

Notes: *For 50 Ohm Coaxial substitute X for C. Example: DEMMV5X1PN
For DD shell size, see page 152.
♣ Keyed

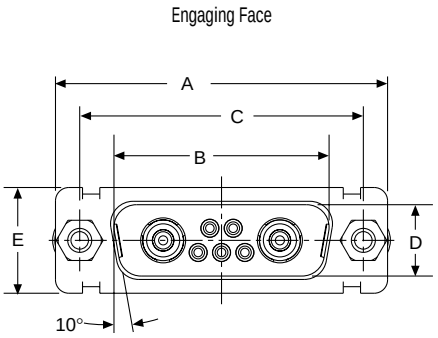

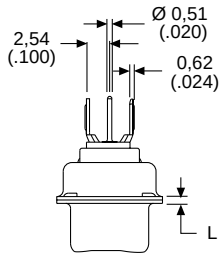

Screw lock, boardlock, and signal contacts removed for clarity

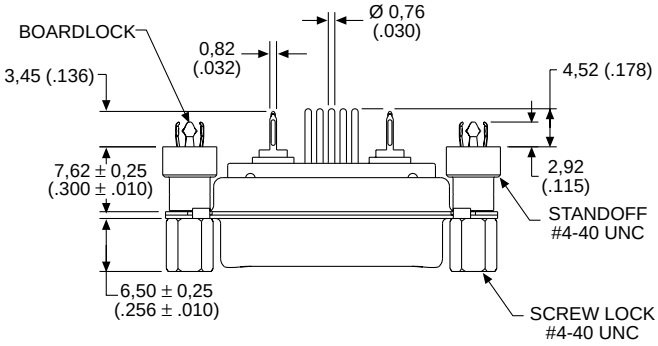

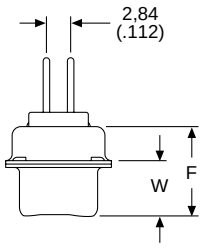

Screw lock, boardlock, and coaxial contact removed for clarity

Dimensions

Shell Size	A ±0,38 (.015)	B ±0,13 (.005)	C ±0,13 (.005)	D ±0,13 (.005)	E ±0,38 (.015)	F ±0,25 (.010)	W ±0,368 (.0145)	W ±0,41 (.016)	L ±0,25 (.010)
DE	30,81 (1.213)	16,92 (.666)	24,99 (.984)	8,36 (.329)	12,55 (.494)	10,72 (.422)	6,693 (.2635)	—	0,76 (.030)
DA	39,14 (1.541)	25,25 (.994)	33,32 (1.312)	8,36 (.329)	12,55 (.494)	10,72 (.422)	6,693 (.2635)	—	0,76 (.030)
DB	53,04 (2.088)	38,96 (1.534)	47,04 (1.852)	8,36 (.329)	12,55 (.494)	10,82 (.426)	—	6,84 (.269)	0,99 (.039)
DC	69,32 (2.729)	55,42 (2.182)	63,50 (2.500)	8,36 (.329)	12,55 (.494)	10,82 (.426)	—	6,84 (.269)	0,99 (.039)

Dimensions are shown in mm (inch)
Dimensions subject to change

Coaxial Straight PCB (Sizes DE-DC)

Receptacle

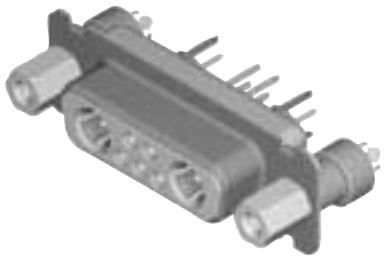

Reader's Resource

For contact cavity arrangements, see page 223.
For P.C. hole patterns, see pages 241-242.
For panel cutouts, see page 221.
For hardware views (Standard), see page 226.
For alternate 50 Ohm coaxial configuration, see page 225.

75 Ohm Part Numbers* with Standoff #4-40 UNC

Shell Size	Layout	Part Number Without Screw Locks Without Boardlocks	Part Number Without Screw Locks With Boardlocks	Part Number With Screw Locks With Boardlocks
DE	5W1	DEMMV5C1SN	DEMMZ5C1SN	DEMMN5C1SN
DA	7W2	DAMMV7C2SN	DAMMZ7C2SN	DAMMN7C2SN
DA	11W1	DAMMV11C1SN	DAMMZ11C1SN	DAMMN11C1SN
DA	3W3	DAMMV3C3SN	DAMMZ3C3SN	DAMMN3C3SN
DA	3WK3♣	DAMMV3CK3SNTM	DAMMZ3CK3SNTM	DAMMN3CK3SNTM
DB	5W5	DBMMV5C5SN	DBMMZ5C5SN	DBMMN5C5SN
DB	9W4	DBMMV9C4SN	DBMMZ9C4SN	DBMMN9C4SN
DB	13W3	DBMMV13C3SN	DBMMZ13C3SN	DBMMN13C3SN
DB	17W2	DBMMV17C2SN	DBMMZ17C2SN	DBMMN17C2SN
DB	21W1	DBMMV21C1SN	DBMMZ21C1SN	DBMMN21C1SN
DC	8W8	DCMMV8C8SN	DCMMZ8C8SN	DCMMN8C8SN
DC	13W6	DCMMV13C6SN	DCMMZ13C6SN	DCMMN13C6SN
DC	17W5	DCMMV17C5SN	DCMMZ17C5SN	DCMMN17C5SN
DC	21WA4	DCMMV21CA4SN	DCMMZ21CA4SN	DCMMN21CA4SN
DC	25W3	DCMMV25C3SN	DCMMZ25C3SN	DCMMN25C3SN
DC	27W2	DCMMV27C2SN	DCMMZ27C2SN	DCMMN27C2SN

Notes: *For 50 Ohm Coaxial substitute X for C. Example: DEMMV5X1SN
For DD shell size, see page 153.
♣ Keyed

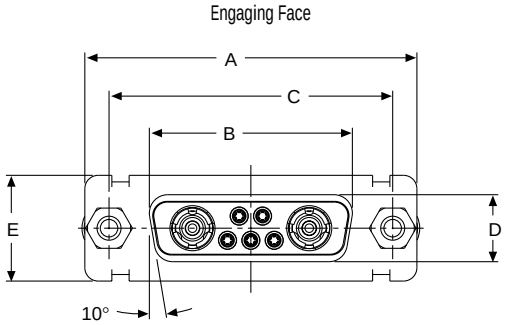

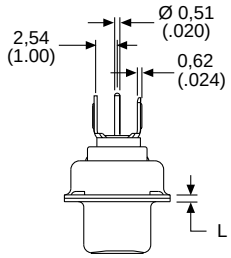

Screw lock, boardlock, and signal contacts removed for clarity

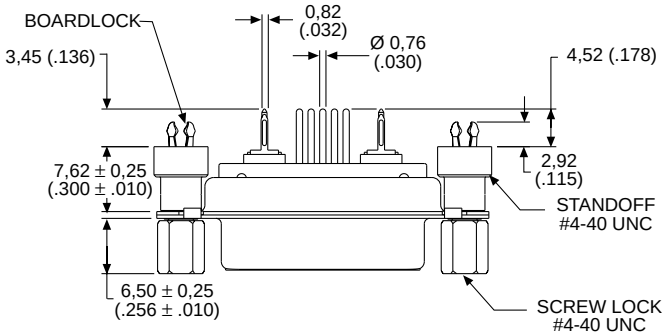

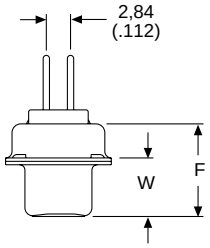

Hardware and coaxial contact removed for clarity

Dimensions

Shell Size	A ±0,38 (.015)	B ±0,13 (.005)	C ±0,13 (.005)	D ±0,13 (.005)	E ±0,38 (.015)	F 0,25 (.010)	W ±0,38 (.015)	L ±0,25 (.010)
DE	30,81 (1.213)	16,33 (.643)	24,99 (.984)	7,90 (.311)	12,55 (.494)	10,90 (.429)	6,94 (.273)	0,76 (.030)
DA	39,14 (1.541)	24,66 (.971)	33,32 (1.312)	7,90 (.311)	12,55 (.494)	10,90 (.429)	6,94 (.273)	0,76 (.030)
DB	53,04 (2.088)	38,38 (1.511)	47,04 (1.852)	7,90 (.311)	12,55 (.494)	10,90 (.429)	6,94 (.273)	0,76 (.030)
DC	69,32 (2.729)	54,84 (2.159)	63,50 (2.500)	7,90 (.311)	12,55 (.494)	10,90 (.429)	6,94 (.273)	0,76 (.030)

Coaxial Straight PCB (Size DD)

Plug

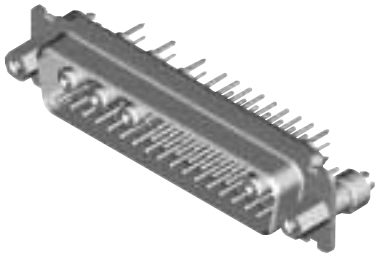

75 Ohm Part Numbers* with Standoff #4-40 UNC

Shell Size	Layout	Part Number Without Screw Locks Without Boardlocks	Part Number Without Screw Locks With Boardlocks	Part Number With Screw Locks With Boardlocks
DD	24W7	DDMMV24C7PN	DDMMZ24C7PN	DDMMN24C7PN
DD	36W4	DDMMV36C4PN	DDMMZ36C4PN	DDMMN36C4PN
DD	43W2	DDMMV43C2PN	DDMMZ43C2PN	DDMMN43C2PN
DD	47W1	DDMMV47C1PN	DDMMZ47C1PN	DDMMN47C1PN

Note: *For 50 Ohm Coaxial substitute X for C. Example: DDMMV24XPN

Reader's Resource

For contact cavity arrangements, see page 222.
For P.C. hole patterns, see page 256.
For panel cutouts, see page 221.
For hardware views (Standard), see page 226.
For alternate 50 Ohm coaxial configuration, see page 225.

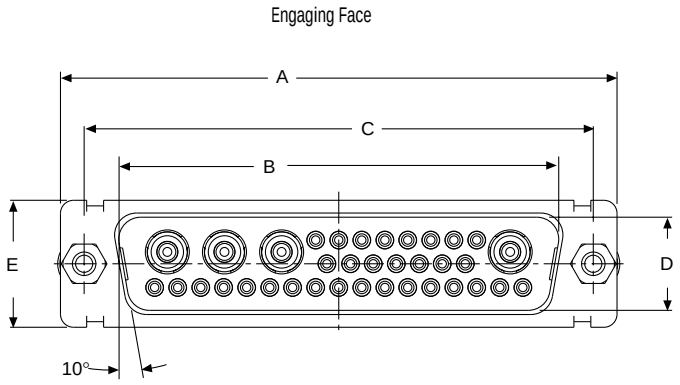

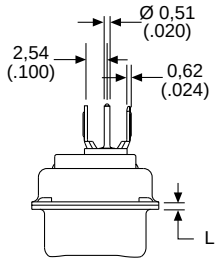

Screw lock, boardlock, and signal contacts removed for clarity

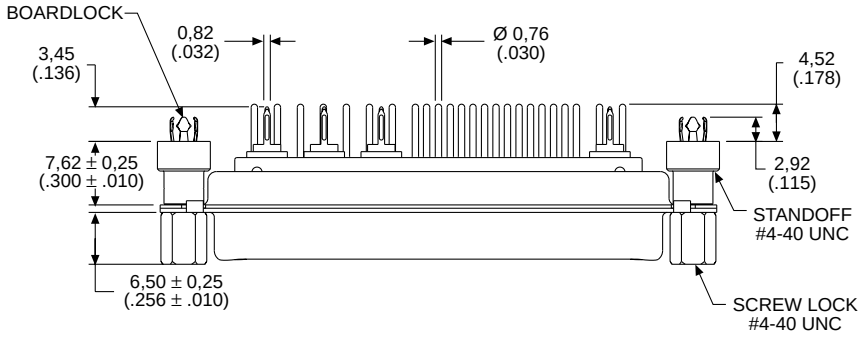

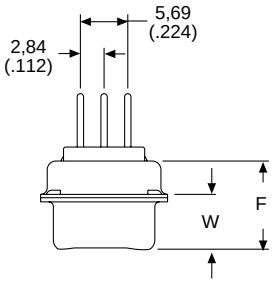

Screw lock, boardlock, and coaxial contact removed for clarity

Dimensions

Shell Size	A ±0,38 (.015)	B ±0,13 (.005)	C ±0,13 (.005)	D ±0,13 (.005)	E ±0,38 (.015)	F ±0,25 (.010)	W ±0,41 (.016)	L ±0,25 (.010)
DD	66,93 (2.635)	52,81 (2.079)	61,11 (2.406)	11,07 (.436)	15,37 (.605)	10,82 (.426)	6,84 (.269)	0,99 (.039)

Dimensions are shown in mm (inch)
Dimensions subject to change

Coaxial Straight PCB (Size DD)

Receptacle

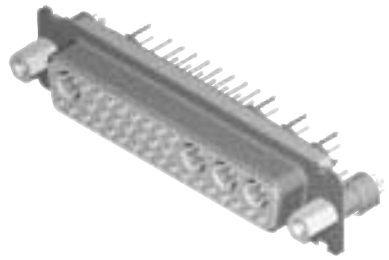

75 Ohm Part Numbers* with Standoff #4-40 UNC

Shell Size	Layout	Part Number Without Screw Locks Without Boardlocks	Part Number Without Screw Locks With Boardlocks	Part Number With Screw Locks With Boardlocks
DD	24W7	DDMMV24C7SN	DDMMZ24C7SN	DDMMN24C7SN
DD	36W4	DDMMV36C4SN	DDMMZ36C4SN	DDMMN36C4SN
DD	43W2	DDMMV43C2SN	DDMMZ43C2SN	DDMMN43C2SN
DD	47W1	DDMMV47C1SN	DDMMZ47C1SN	DDMMN47C1SN

Note: *For 50 Ohm Coaxial substitute X for C. Example: DDMMV24X7SN

Reader's Resource

For contact cavity arrangements, see page 223.
For P.C. hole patterns, see page 259.
For panel cutouts, see page 221.
For hardware views (Standard), see page 226.
For alternate 50 Ohm coaxial configuration, see page 225.

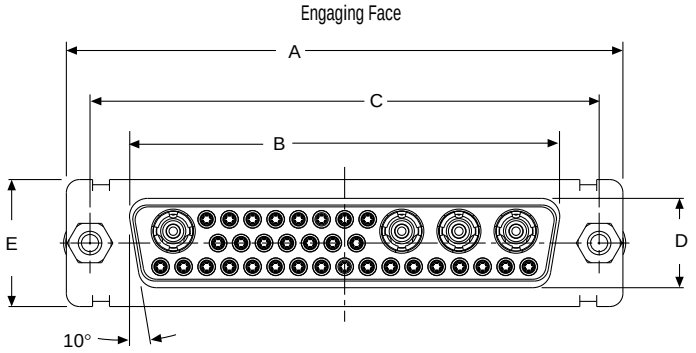

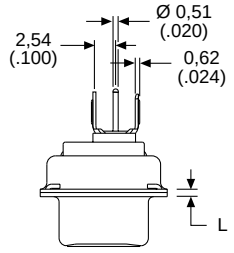

Screw lock, boardlock, and signal contacts removed for clarity

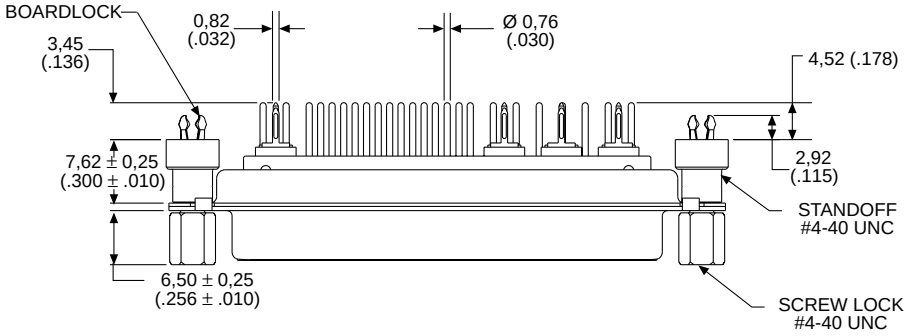

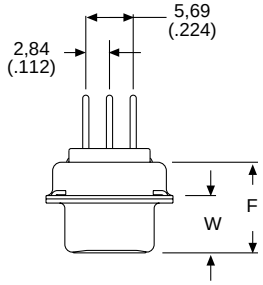

Screw lock, boardlock, and coaxial contact removed for clarity

Dimensions

Shell Size	A ±0,38 (.015)	B ±0,13 (.005)	C ±0,13 (.005)	D ±0,13 (.005)	E ±0,38 (.015)	F ±0,25 (.010)	W ±0,38 (.015)	L ±0,25 (.010)
DD	66,93 (2.635)	52,42 (2.064)	61,11 (2.406)	10,74 (.423)	15,37 (.605)	10,90 (.429)	6,94 (.273)	0,76 (.030)

40 A High Power 90° PCB (Sizes DE-DC)

Plug

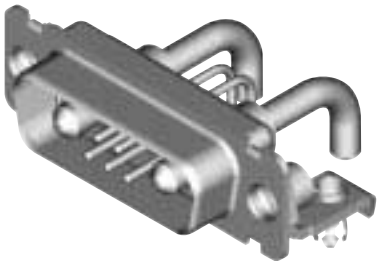

Reader's Resource

For contact cavity arrangements, see page 222.
For P.C. hole patterns, see pages 244-245.
For panel cutouts, see page 221.
For hardware views (Standard), see page 226.
For alternate bracket configuration (when connectors are supplied without boardlocks), see page 226.

Part Numbers with Metal Bracket and Rivnut #4-40 UNC

Shell Size	Layout	Part Number Without Screw Locks Without Boardlocks	Part Number Without Screw Locks With Boardlocks	Part Number With Screw Locks Without Boardlocks	Part Number With Screw Locks With Boardlocks
DE	5W1	DEMMP5H1PJ	DEMMC5H1PJ	DEMMD5H1PJ	DEMMG5H1PJ
DA	7W2	DAMMP7H2PJ	DAMMC7H2PJ	DAMMD7H2PJ	DAMMG7H2PJ
DA	11W1	DAMMP11H1PJ	DAMMC11H1PJ	DAMMD11H1PJ	DAMMG11H1PJ
DA	3W3	DAMMP3H3PJ	DAMMC3H3PJ	DAMMD3H3PJ	DAMMG3H3PJ
DA	3WK3♣	DAMMP3HK3PJTM	DAMMC3HK3PJTM	DAMMD3HK3PJTM	DAMMG3HK3PJTM
DB	5W5	DBMMP5H5PJ	DBMMC5H5PJ	DBMMD5H5PJ	DBMMG5H5PJ
DB	9W4	DBMMP9H4PJ	DBMMC9H4PJ	DBMMD9H4PJ	DBMMG9H4PJ
DB	13W3	DBMMP13H3PJ	DBMMC13H3PJ	DBMMD13H3PJ	DBMMG13H3PJ
DB	17W2	DBMMP17H2PJ	DBMMC17H2PJ	DBMMD17H2PJ	DBMMG17H2PJ
DB	21W1	DBMMP21H1PJ	DBMMC21H1PJ	DBMMD21H1PJ	DBMMG21H1PJ
DC	8W8	DCMMP8H8PJ	DCMMC8H8PJ	DCMMD8H8PJ	DCMMG8H8PJ
DC	13W6	DCMMP13H6PJ	DCMMC13H6PJ	DCMMD13H6PJ	DCMMG13H6PJ
DC	17W5	DCMMP17H5PJ	DCMMC17H5PJ	DCMMD17H5PJ	DCMMG17H5PJ
DC	21WA4	DCMMP21HA4PJ	DCMMC21HA4PJ	DCMMD21HA4PJ	DCMMG21HA4PJ
DC	25W3	DCMMP25H3PJ	DCMMC25H3PJ	DCMMD25H3PJ	DCMMG25H3PJ
DC	27W2	DCMMP27H2PJ	DCMMC27H2PJ	DCMMD27H2PJ	DCMMG27H2PJ

Notes: For DD shell size, see page 156.
♣ Keyed

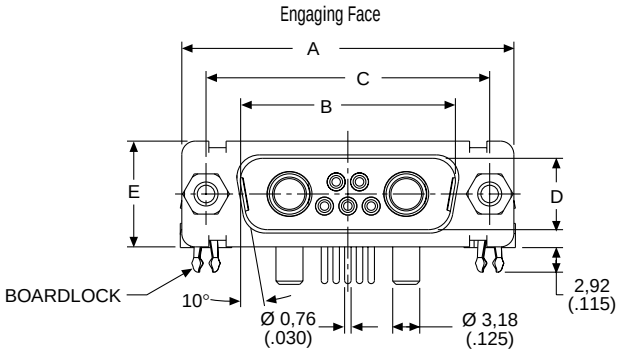

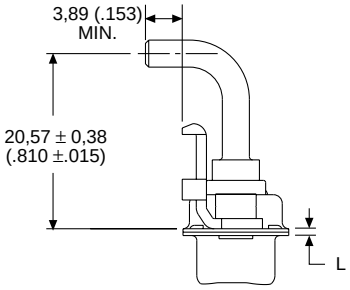

Screw lock, boardlock, and signal contacts removed for clarity

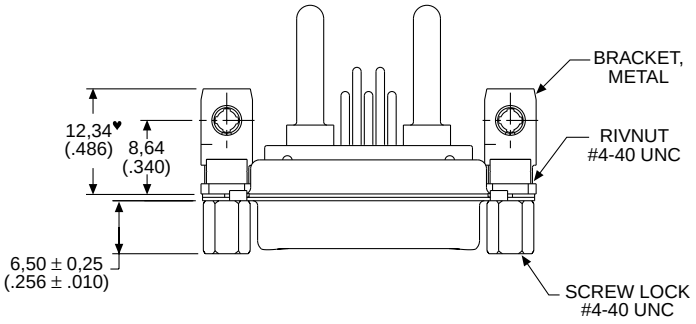

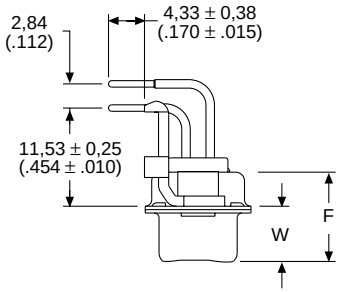

Screw lock, boardlock, and high power contact removed for clarity

Note: ♥ Dimension varies with alternate bracket configuration, see Reader's Resource page 226.

Dimensions

Shell Size	A ±0,38 (.015)	B ±0,13 (.005)	C ±0,13 (.005)	D ±0,13 (.005)	E ±0,38 (.015)	F ±0,25 (.010)	W ±0,368 (.0145)	W ±0,41 (.016)	L ±0,25 (.010)
DE	30,81 (1.213)	16,92 (.666)	24,99 (.984)	8,36 (.329)	12,55 (.494)	10,72 (.422)	6,693 (.2635)	—	0,76 (.030)
DA	39,14 (1.541)	25,25 (.994)	33,32 (1.312)	8,36 (.329)	12,55 (.494)	10,72 (.422)	6,693 (.2635)	—	0,76 (.030)
DB	53,04 (2.088)	38,96 (1.534)	47,04 (1.852)	8,36 (.329)	12,55 (.494)	10,82 (.426)	—	6,84 (.269)	0,99 (.039)
DC	69,32 (2.729)	55,42 (2.182)	63,50 (2.500)	8,36 (.329)	12,55 (.494)	10,82 (.426)	—	6,84 (.269)	0,99 (.039)

Dimensions are shown in mm (inch)
Dimensions subject to change

40 A High Power 90° PCB (Sizes DE-DC)

Receptacle

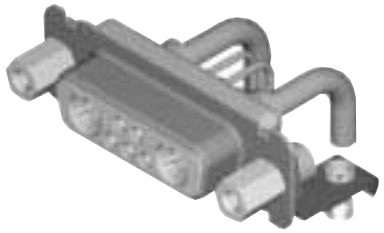

Reader's Resource

For contact cavity arrangements, see page 223.
For P.C. hole patterns, see pages 247-248.
For panel cutouts, see page 221.
For hardware views (Standard), see page 226.
For alternate bracket configuration (when connectors are supplied without boardlocks), see page 226.

Part Numbers with Metal Bracket and Rivnut #4-40 UNC

Shell Size	Layout	Part Number Without Screw Locks Without Boardlocks	Part Number Without Screw Locks With Boardlocks	Part Number With Screw Locks Without Boardlocks	Part Number With Screw Locks With Boardlocks
DE	5W1	DEMMP5H1SJ	DEMMC5H1SJ	DEMMD5H1SJ	DEMMG5H1SJ
DA	7W2	DAMMP7H2SJ	DAMMC7H2SJ	DAMMD7H2SJ	DAMMG7H2SJ
DA	11W1	DAMMP11H1SJ	DAMMC11H1SJ	DAMMD11H1SJ	DAMMG11H1SJ
DA	3W3	DAMMP3H3SJ	DAMMC3H3SJ	DAMMD3H3SJ	DAMMG3H3SJ
DA	3WK3♣	DAMMP3HK3SJTM	DAMMC3HK3SJTM	DAMMD3HK3SJTM	DAMMG3HK3SJTM
DB	5W5	DBMMP5H5SJ	DBMMC5H5SJ	DBMMD5H5SJ	DBMMG5H5SJ
DB	9W4	DBMMP9H4SJ	DBMMC9H4SJ	DBMMD9H4SJ	DBMMG9H4SJ
DB	13W3	DBMMP13H3SJ	DBMMC13H3SJ	DBMMD13H3SJ	DBMMG13H3SJ
DB	17W2	DBMMP17H2SJ	DBMMC17H2SJ	DBMMD17H2SJ	DBMMG17H2SJ
DB	21W1	DBMMP21H1SJ	DBMMC21H1SJ	DBMMD21H1SJ	DBMMG21H1SJ
DC	8W8	DCMMP8H8SJ	DCMMC8H8SJ	DCMMD8H8SJ	DCMMG8H8SJ
DC	13W6	DCMMP13H6SJ	DCMMC13H6SJ	DCMMD13H6SJ	DCMMG13H6SJ
DC	17W5	DCMMP17H5SJ	DCMMC17H5SJ	DCMMD17H5SJ	DCMMG17H5SJ
DC	21WA4	DCMMP21HA4SJ	DCMMC21HA4SJ	DCMMD21HA4SJ	DCMMG21HA4SJ
DC	25W3	DCMMP25H3SJ	DCMMC25H3SJ	DCMMD25H3SJ	DCMMG25H3SJ
DC	27W2	DCMMP27H2SJ	DCMMC27H2SJ	DCMMD27H2SJ	DCMMG27H2SJ

Notes: For DD shell size, see page 157.
♣ Keyed.

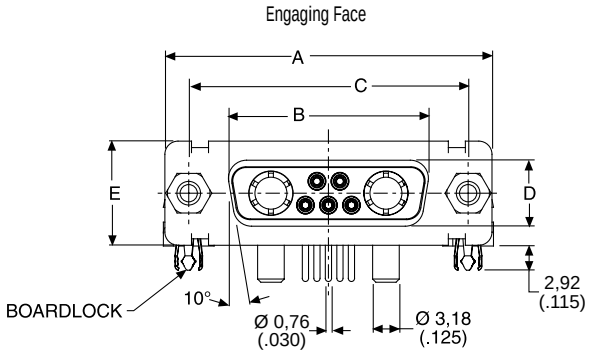

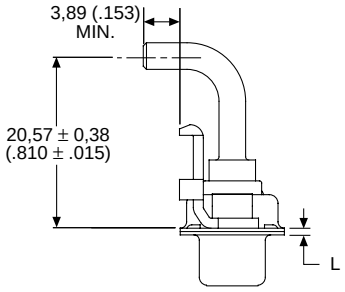

Screw lock, boardlock, and signal contacts removed for clarity

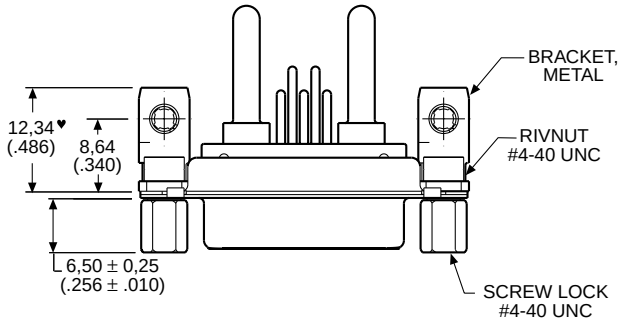

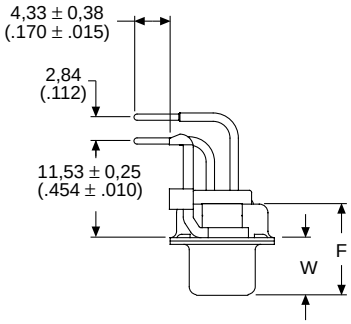

Screw lock, boardlock, and high power contact removed for clarity

Note: ♥ Dimension varies with alternate bracket configuration, see Reader's Resource page 226.

Dimensions

Shell Size	A ±0,38 (.015)	B ±0,13 (.005)	C ±0,13 (.005)	D ±0,13 (.005)	E ±0,38 (.015)	F ±0,25 (.010)	W ±0,38 (.015)	L ±0,25 (.010)
DE	30,81 (1.213)	16,33 (.643)	24,99 (.984)	7,90 (.311)	12,55 (.494)	10,90 (.429)	6,94 (.273)	0,76 (.030)
DA	39,14 (1.541)	24,66 (.971)	33,32 (1.312)	7,90 (.311)	12,55 (.494)	10,90 (.429)	6,94 (.273)	0,76 (.030)
DB	53,04 (2.088)	38,38 (1.511)	47,04 (1.852)	7,90 (.311)	12,55 (.494)	10,90 (.429)	6,94 (.273)	0,76 (.030)
DC	69,32 (2.729)	54,84 (2.159)	63,50 (2.500)	7,90 (.311)	12,55 (.494)	10,90 (.429)	6,94 (.273)	0,76 (.030)

40 A High Power 90° PCB (Size DD)

Plug

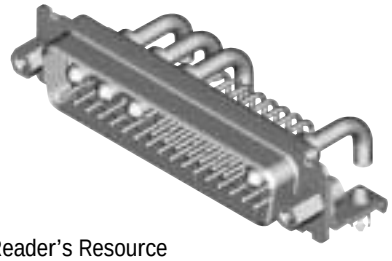

Reader's Resource
For contact cavity arrangements, see page 222.
For P.C. hole patterns, see page 246.
For panel cutouts, see page 221.
For hardware views (Standard), see page 226.
For alternate bracket configuration (when connectors are supplied without boardlocks), see page 226.

Part Numbers with Metal Bracket and Rivnut #4-40 UNC

Shell Size	Layout	Part Number Without Screw Locks Without Boardlocks	Part Number Without Screw Locks With Boardlocks	Part Number With Screw Locks Without Boardlocks	Part Number With Screw Locks With Boardlocks
DD	24W7	DDMMP24H7PJ	DDMMC24H7PJ	DDMMD24H7PJ	DDMMG24H7PJ
DD	36W4	DDMMP36H4PJ	DDMMC36H4PJ	DDMMD36H4PJ	DDMMG36H4PJ
DD	43W2	DDMMP43H2PJ	DDMMC43H2PJ	DDMMD43H2PJ	DDMMG43H2PJ
DD	47W1	DDMMP47H1PJ	DDMMC47H1PJ	DDMMD47H1PJ	DDMMG47H1PJ

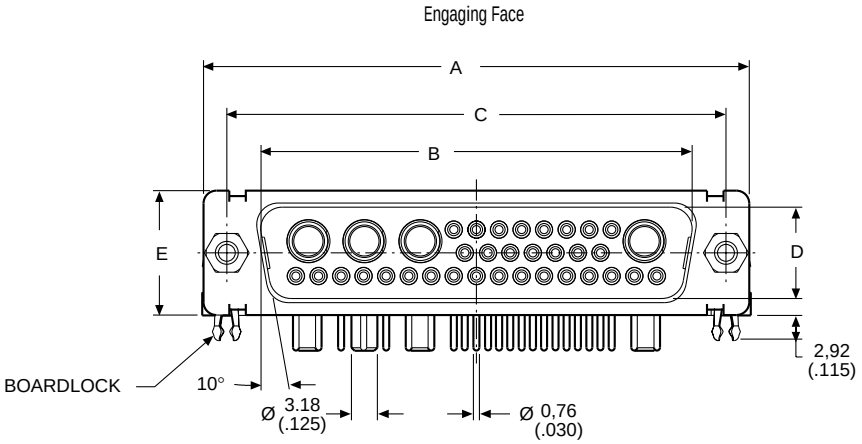

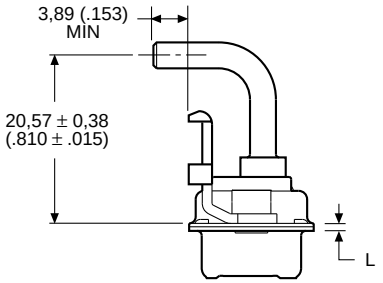

Screw lock, boardlock, and signal contacts removed for clarity

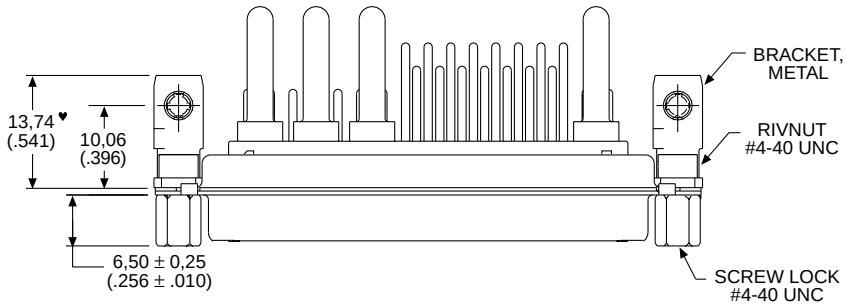

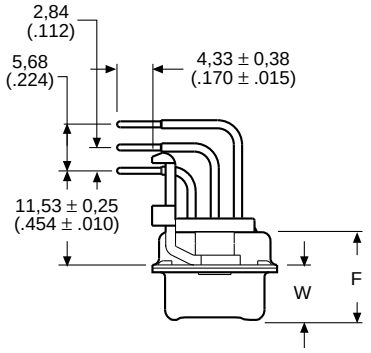

Screw lock, boardlock, and high power contact removed for clarity

Note: ♥ Dimension varies with alternate bracket configuration, see Reader's Resource page 226.

Dimensions

Shell Size	A ±0,38 (.015)	B ±0,13 (.005)	C ±0,13 (.005)	D ±0,13 (.005)	E ±0,38 (.015)	F ±0,25 (.010)	W ±0,41 (.016)	L ±0,25 (.010)
DD	66,93 (2.635)	52,81 (2.079)	61,11 (2.406)	11,07 (.436)	15,37 (.605)	10,82 (.426)	6,84 (.269)	0,99 (.039)

Dimensions are shown in mm (inch)
Dimensions subject to change

40 A High Power 90° PCB (Size DD)

Receptacle

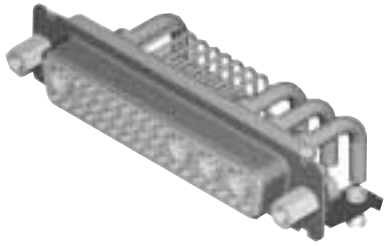

Reader's Resource

For contact cavity arrangements, see page 223.
For P.C. hole patterns, see page 249.
For panel cutouts, see page 221.
For hardware views (Standard), see page 226.
For alternate bracket configuration (when connectors are supplied without boardlocks), see page 226.

Part Numbers with Metal Bracket and Rivnut #4-40 UNC

Shell Size	Layout	Part Number Without Screw Locks Without Boardlocks	Part Number Without Screw Locks With Boardlocks	Part Number With Screw Locks Without Boardlocks	Part Number With Screw Locks With Boardlocks
DD	24W7	DDMMP24H7SJ	DDMMC24H7SJ	DDMMD24H7SJ	DDMMG24H7SJ
DD	36W4	DDMMP36H4SJ	DDMMC36H4SJ	DDMMD36H4SJ	DDMMG36H4SJ
DD	43W2	DDMMP43H2SJ	DDMMC43H2SJ	DDMMD43H2SJ	DDMMG43H2SJ
DD	47W1	DDMMP47H1SJ	DDMMC47H1SJ	DDMMD47H1SJ	DDMMG47H1SJ

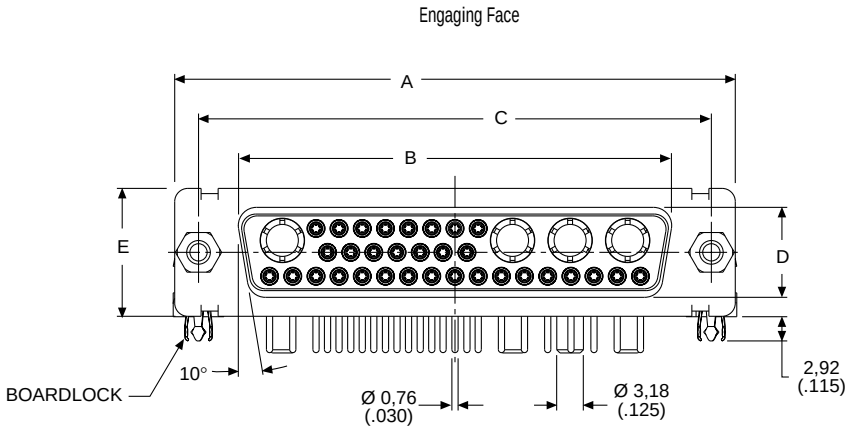

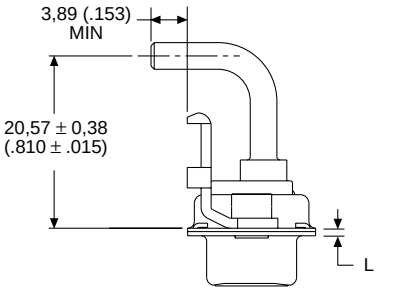

Screw lock, boardlock, and signal contacts removed for clarity

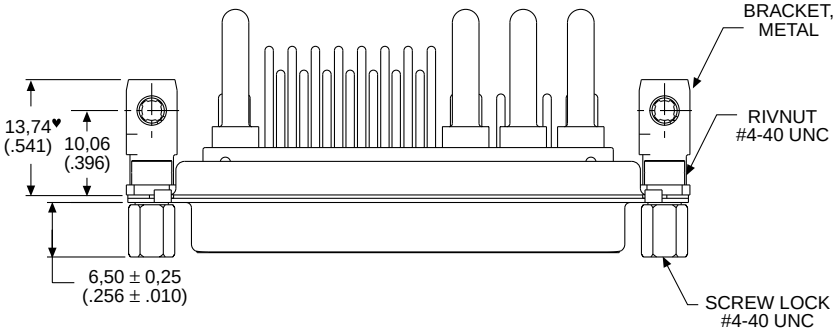

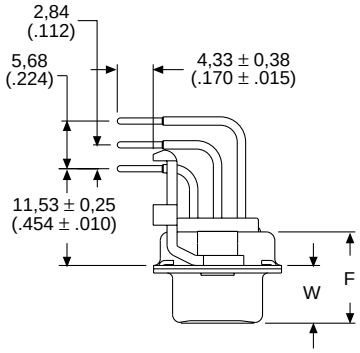

Screw lock, boardlock, and high power contact removed for clarity

Note: ♥ Dimension varies with alternate bracket configuration, see Reader's Resource page 226.

Dimensions

Shell Size	A ±0,38 (.015)	B ±0,13 (.005)	C ±0,13 (.005)	D ±0,13 (.005)	E ±0,38 (.015)	F ±0,25 (.010)	W ±0,38 (.015)	L ±0,25 (.010)
DD	66,93 (2.635)	52,42 (2.064)	61,11 (2.406)	10,74 (.423)	15,37 (.605)	10,90 (.429)	6,94 (.273)	0,76 (.030)

40 A High Power Straight PCB (Sizes DE-DC)

Plug

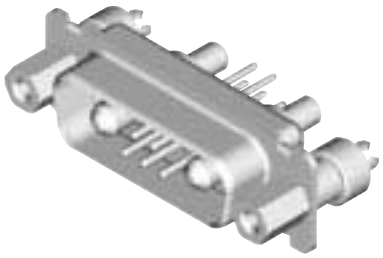

Reader's Resource

For contact cavity arrangements, see page 222.
For P.C. hole patterns, see pages 254-255.
For panel cutouts, see page 221.
For hardware views (Standard), see page 226.

Part Numbers with Standoff #4-40 UNC

Shell Size	Layout	Part Number Without Screw Locks Without Boardlocks	Part Number Without Screw Locks With Boardlocks	Part Number With Screw Locks With Boardlocks
DE	5W1	DEMMV5H1PN	DEMMZ5H1PN	DEMMN5H1PN
DA	7W2	DAMMV7H2PN	DAMMZ7H2PN	DAMMN7H2PN
DA	11W1	DAMMV11H1PN	DAMMZ11H1PN	DAMMN11H1PN
DA	3W3	DAMMV3H3PN	DAMMZ3H3PN	DAMMN3H3PN
DA	3WK3♣	DAMMV3HK3PNTM	DAMMZ3HK3PNTM	DAMMN3HK3PNTM
DB	5W5	DBMMV5H5PN	DBMMZ5H5PN	DBMMN5H5PN
DB	9W4	DBMMV9H4PN	DBMMZ9H4PN	DBMMN9H4PN
DB	13W3	DBMMV13H3PN	DBMMZ13H3PN	DBMMN13H3PN
DB	17W2	DBMMV17H2PN	DBMMZ17H2PN	DBMMN17H2PN
DB	21W1	DBMMV21H1PN	DBMMZ21H1PN	DBMMN21H1PN
DC	8W8	DCMMV8H8PN	DCMMZ8H8PN	DCMMN8H8PN
DC	13W6	DCMMV13H6PN	DCMMZ13H6PN	DCMMN13H6PN
DC	17W5	DCMMV17H5PN	DCMMZ17H5PN	DCMMN17H5PN
DC	21WA4	DCMMV21HA4PN	DCMMZ21HA4PN	DCMMN21HA4PN
DC	25W3	DCMMV25H3PN	DCMMZ25H3PN	DCMMN25H3PN
DC	27W2	DCMMV27H2PN	DCMMZ27H2PN	DCMMN27H2PN

Notes: For DD shell sizes, see page 160.
♣ Keyed.

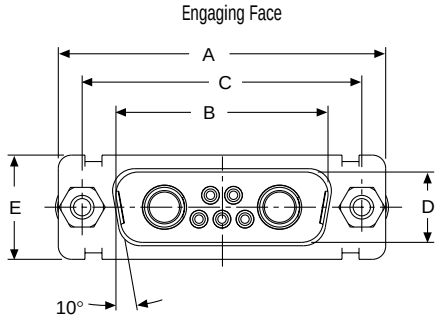

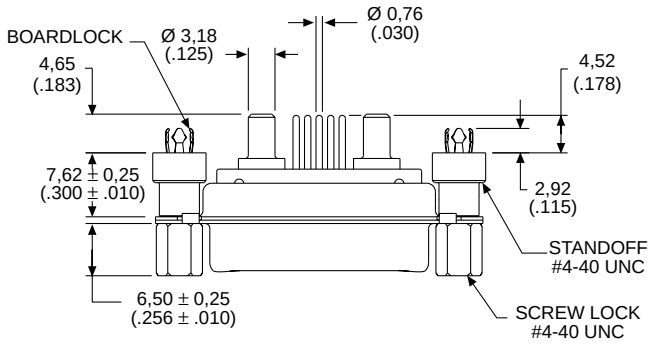

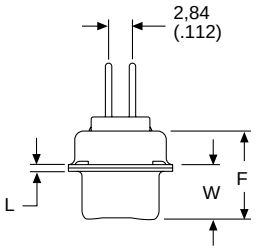

Screw lock, boardlock and high power contact removed for clarity

Dimensions

Shell Size	A ±0,38 (.015)	B ±0,13 (.005)	C ±0,13 (.005)	D ±0,13 (.005)	E ±0,38 (.015)	F ±0,25 (.010)	W ±0,368 (.0145)	W ±0,41 (.016)	L ±0,25 (.010)
DE	30,81 (1.213)	16,92 (.666)	24,99 (.984)	8,36 (.329)	12,55 (.494)	10,72 (.422)	6,693 (.2635)	—	0,76 (.030)
DA	39,14 (1.541)	25,25 (.994)	33,32 (1.312)	8,36 (.329)	12,55 (.494)	10,72 (.422)	6,693 (.2635)	—	0,76 (.030)
DB	53,04 (2.088)	38,96 (1.534)	47,04 (1.852)	8,36 (.329)	12,55 (.494)	10,82 (.426)	—	6,84 (.269)	0,99 (.039)
DC	69,32 (2.729)	55,42 (2.182)	63,50 (2.500)	8,36 (.329)	12,55 (.494)	10,82 (.426)	—	6,84 (.269)	0,99 (.039)

Dimensions are shown in mm (inch)
Dimensions subject to change

40 A High Power Straight PCB (Sizes DE-DC)

Receptacle

Reader's Resource
For contact cavity arrangements, see page 223.
For P.C. hole patterns, see pages 257-258.
For panel cutouts, see page 221.
For hardware views (Standard), see page 226.

Part Numbers with Standoff #4-40 UNC

Shell Size	Layout	Part Number Without Screw Locks Without Boardlocks	Part Number Without Screw Locks With Boardlocks	Part Number With Screw Locks With Boardlocks
DE	5W1	DEMMV5H1SN	DEMMZ5H1SN	DEMMN5H1SN
DA	7W2	DAMMV7H2SN	DAMMZ7H2SN	DAMMN7H2SN
DA	11W1	DAMMV11H1SN	DAMMZ11H1SN	DAMMN11H1SN
DA	3W3	DAMMV3H3SN	DAMMZ3H3SN	DAMMN3H3SN
DA	3WK3♣	DAMMV3HK3SNTM	DAMMZ3HK3SNTM	DAMMN3HK3SNTM
DB	5W5	DBMMV5H5SN	DBMMZ5H5SN	DBMMN5H5SN
DB	9W4	DBMMV9H4SN	DBMMZ9H4SN	DBMMN9H4SN
DB	13W3	DBMMV13H3SN	DBMMZ13H3SN	DBMMN13H3SN
DB	17W2	DBMMV17H2SN	DBMMZ17H2SN	DBMMN17H2SN
DB	21W1	DBMMV21H1SN	DBMMZ21H1SN	DBMMN21H1SN
DC	8W8	DCMMV8H8SN	DCMMZ8H8SN	DCMMN8H8SN
DC	13W6	DCMMV13H6SN	DCMMZ13H6SN	DCMMN13H6SN
DC	17W5	DCMMV17H5SN	DCMMZ17H5SN	DCMMN17H5SN
DC	21WA4	DCMMV21HA4SN	DCMMZ21HA4SN	DCMMN21HA4SN
DC	25W3	DCMMV25H3SN	DCMMZ25H3SN	DCMMN25H3SN
DC	27W2	DCMMV27H2SN	DCMMZ27H2SN	DCMMN27H2SN

Notes: For DD shell sizes, see page 161.
♣ Keyed.

Engaging Face

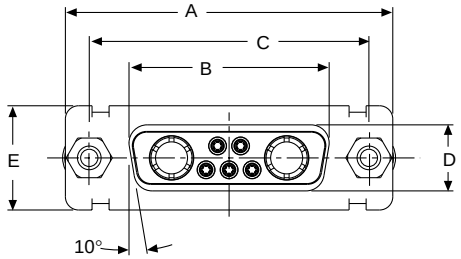

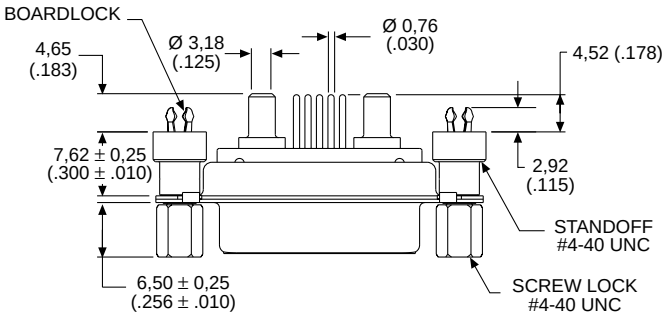

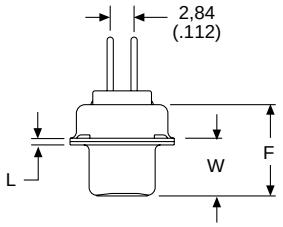

Screw lock, boardlock and high power contact removed for clarity

Dimensions

Shell Size	A ±0,38 (.015)	B ±0,13 (.005)	C ±0,13 (.005)	D ±0,13 (.005)	E ±0,38 (.015)	F ±0,25 (.010)	W ±0,38 (.015)	L ±0,25 (.010)
DE	30,81 (1.213)	16,33 (.643)	24,99 (.984)	7,90 (.311)	12,55 (.494)	10,90 (.429)	6,94 (.273)	0,76 (.030)
DA	39,14 (1.541)	24,66 (.971)	33,32 (1.312)	7,90 (.311)	12,55 (.494)	10,90 (.429)	6,94 (.273)	0,76 (.030)
DB	53,04 (2.088)	38,38 (1.511)	47,04 (1.852)	7,90 (.311)	12,55 (.494)	10,90 (.429)	6,94 (.273)	0,76 (.030)
DC	69,32 (2.729)	54,84 (2.159)	63,50 (2.500)	7,90 (.311)	12,55 (.494)	10,90 (.429)	6,94 (.273)	0,76 (.030)

40 A High Power Straight PCB (Size DD)

Plug

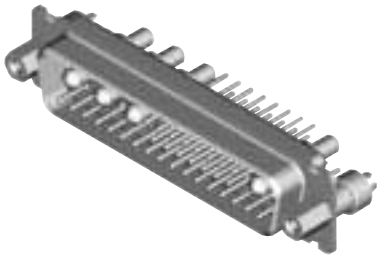

Part Numbers with Standoff #4-40 UNC

Shell Size	Layout	Part Number Without Screw Locks Without Boardlocks	Part Number Without Screw Locks With Boardlocks	Part Number With Screw Locks With Boardlocks
DD	24W7	DDMMV24H7PN	DDMMZ24H7PN	DDMMN24H7PN
DD	36W4	DDMMV36H4PN	DDMMZ36H4PN	DDMMN36H4PN
DD	43W2	DDMMV43H2PN	DDMMZ43H2PN	DDMMN43H2PN
DD	47W1	DDMMV47H1PN	DDMMZ47H1PN	DDMMN47H1PN

Reader's Resource
For contact cavity arrangements, see page 222.
For P.C. hole patterns, see page 256.
For panel cutouts, see page 221.
For hardware views (Standard), see page 226.

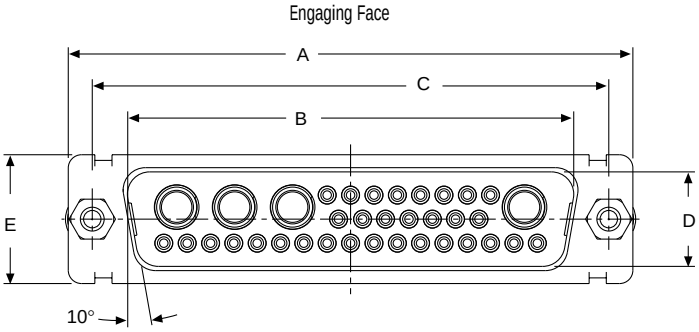

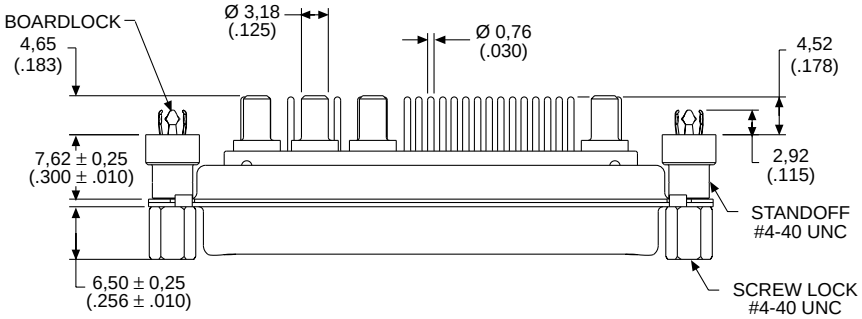

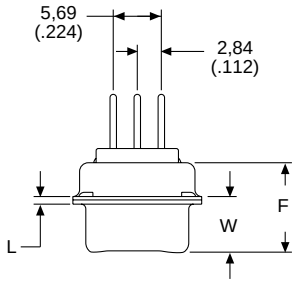

Screw lock, boardlock, and high power contact removed for clarity

Dimensions

Shell Size	A ±0,38 (.015)	B ±0,13 (.005)	C ±0,13 (.005)	D ±0,13 (.005)	E ±0,38 (.015)	F ±0,25 (.010)	W ±0,41 (.016)	L ±0,25 (.010)
DD	66,93 (2.635)	52,81 (2.079)	61,11 (2.406)	11,07 (.436)	15,37 (.605)	10,82 (.426)	6,84 (.269)	0,99 (.039)

Dimensions are shown in mm (inch)
Dimensions subject to change

40 A High Power Straight PCB (Size DD)

Receptacle

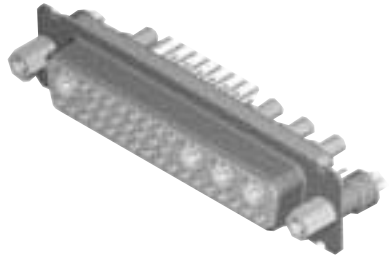

Part Numbers with Standoff #4-40 UNC

Shell Size	Layout	Part Number Without Screw Locks Without Boardlocks	Part Number Without Screw Locks With Boardlocks	Part Number With Screw Locks With Boardlocks
DD	24W7	DDMMV24H7SN	DDMMZ24H7SN	DDMMN24H7SN
DD	36W4	DDMMV36H4SN	DDMMZ36H4SN	DDMMN36H4SN
DD	43W2	DDMMV43H2SN	DDMMZ43H2SN	DDMMN43H2SN
DD	47W1	DDMMV47H1SN	DDMMZ47H1SN	DDMMN47H1SN

Reader's Resource

For contact cavity arrangements, see page 223.
For P.C. hole patterns, see page 259.
For panel cutouts, see page 221.
For hardware views (Standard), see page 226.

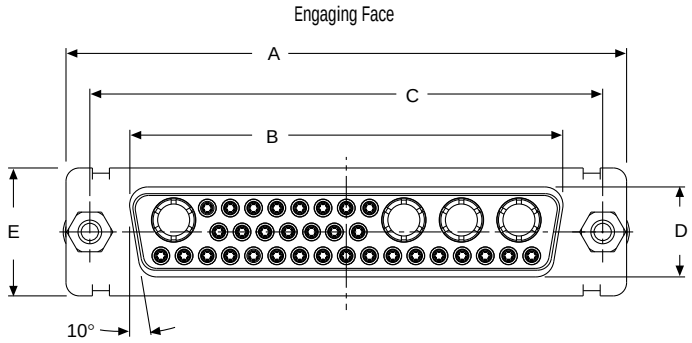

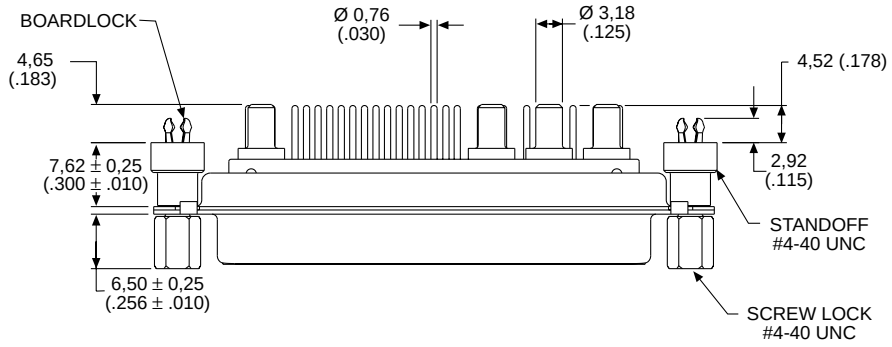

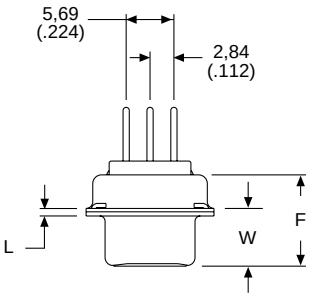

Screw lock, boardlock and high power contact removed for clarity

Dimensions

Shell Size	A ±0,38 (.015)	B ±0,13 (.005)	C ±0,13 (.005)	D ±0,13 (.005)	E ±0,38 (.015)	F ±0,25 (.010)	W ±0,38 (.015)	L ±0,25 (.010)
DD	66,93 (2.635)	52,42 (2.064)	61,11 (2.406)	10,74 (.423)	15,37 (.605)	10,90 (.429)	6,94 (.273)	0,76 (.030)

High Voltage Straight PCB (Sizes DE-DC)

Plug

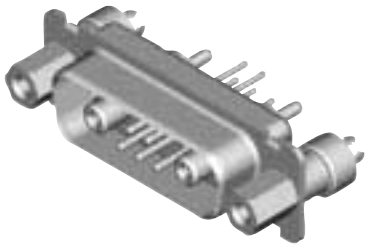

Reader's Resource
For contact cavity arrangements, see page 222.
For P.C. hole patterns, see pages 254-255.
For panel cutouts, see page 221.
For hardware views (Standard), see page 226.

Part Numbers with Standoff #4-40 UNC

Shell Size	Layout	Part Number Without Screw Locks Without Boardlocks	Part Number Without Screw Locks With Boardlocks	Part Number With Screw Locks With Boardlocks
DE	5W1	DEMMV5V1PN	DEMMZ5V1PN	DEMMN5V1PN
DA	7W2	DAMMV7V2PN	DAMMZ7V2PN	DAMMN7V2PN
DA	11W1	DAMMV11V1PN	DAMMZ11V1PN	DAMMN11V1PN
DA	3W3	DAMMV3V3PN	DAMMZ3V3PN	DAMMN3V3PN
DA	3WK3♣	DAMMV3VK3PNTM	DAMMZ3VK3PNTM	DAMMN3VK3PNTM
DB	5W5	DBMMV5V5PN	DBMMZ5V5PN	DBMMN5V5PN
DB	9W4	DBMMV9V4PN	DBMMZ9V4PN	DBMMN9V4PN
DB	13W3	DBMMV13V3PN	DBMMZ13V3PN	DBMMN13V3PN
DB	17W2	DBMMV17V2PN	DBMMZ17V2PN	DBMMN17V2PN
DB	21W1	DBMMV21V1PN	DBMMZ21V1PN	DBMMN21V1PN
DC	8W8	DCMMV8V8PN	DCMMZ8V8PN	DCMMN8V8PN
DC	13W6	DCMMV13V6PN	DCMMZ13V6PN	DCMMN13V6PN
DC	17W5	DCMMV17V5PN	DCMMZ17V5PN	DCMMN17V5PN
DC	21WA4	DCMMV21VA4PN	DCMMZ21VA4PN	DCMMN21VA4PN
DC	25W3	DCMMV25V3PN	DCMMZ25V3PN	DCMMN25V3PN
DC	27W2	DCMMV27V2PN	DCMMZ27V2PN	DCMMN27V2PN

Notes: For DD shell size, see page 164.
♣ Keyed.

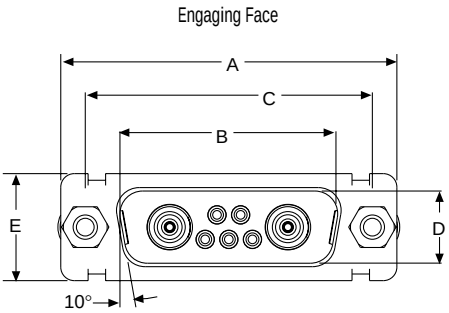

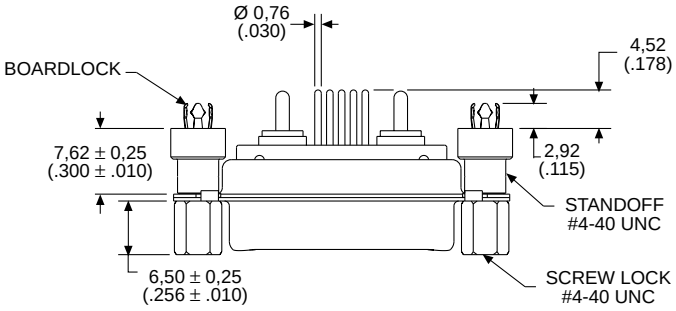

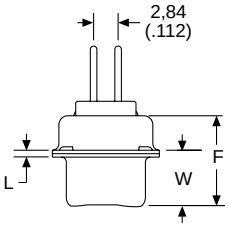

Hardware and high voltage contact removed for clarity

Dimensions

Plug Shell Size	A ±0,38 (.015)	B ±0,13 (.005)	C ±0,13 (.005)	D ±0,13 (.005)	E ±0,38 (.015)	F ±0,25 (.010)	W ±0,37 (.015)	W ±0,41 (.016)	L ±0,25 (.010)
DE	30,81 (1.213)	16,92 (.666)	24,99 (.984)	8,36 (.329)	12,55 (.494)	10,72 (.422)	6,69 (.264)	—	0,76 (.030)
DA	39,14 (1.541)	25,25 (.994)	33,32 (1.312)	8,36 (.329)	12,55 (.494)	10,72 (.422)	6,69 (.264)	—	0,76 (.030)
DB	53,04 (2.088)	38,96 (1.534)	47,04 (1.852)	8,36 (.329)	12,55 (.494)	10,82 (.426)	—	6,84 (.269)	0,99 (.039)
DC	69,32 (2.729)	55,42 (2.182)	63,50 (2.500)	8,36 (.329)	12,55 (.494)	10,82 (.426)	—	6,84 (.269)	0,99 (.039)

Dimensions are shown in mm (inch)
Dimensions subject to change

High Voltage Straight PCB (Sizes DE-DC)

Receptacle

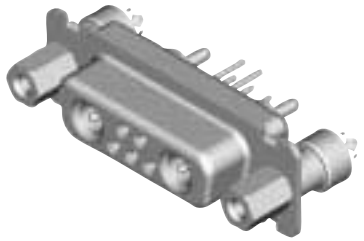

Reader's Resource
For contact cavity arrangements, see page 223.
For P.C. hole patterns, see pages 257-258.
For panel cutouts, see page 221.
For hardware views (Standard), see page 226.

Part Numbers with Standoff #4-40 UNC

Shell Size	Layout	Part Number Without Screw Locks Without Boardlocks	Part Number Without Screw Locks With Boardlocks	Part Number With Screw Locks With Boardlocks
DE	5W1	DEMMV5V1SN	DEMMZ5V1SN	DEMMN5V1SN
DA	7W2	DAMMV7V2SN	DAMMZ7V2SN	DAMMN7V2SN
DA	11W1	DAMMV11V1SN	DAMMZ11V1SN	DAMMN11V1SN
DA	3W3	DAMMV3V3SN	DAMMZ3V3SN	DAMMN3V3SN
DA	3WK3♣	DAMMV3VK3SNTM	DAMMZ3VK3SNTM	DAMMN3VK3SNTM
DB	5W5	DBMMV5V5SN	DBMMZ5V5SN	DBMMN5V5SN
DB	9W4	DBMMV9V4SN	DBMMZ9V4SN	DBMMN9V4SN
DB	13W3	DBMMV13V3SN	DBMMZ13V3SN	DBMMN13V3SN
DB	17W2	DBMMV17V2SN	DBMMZ17V2SN	DBMMN17V2SN
DB	21W1	DBMMV21V1SN	DBMMZ21V1SN	DBMMN21V1SN
DC	8W8	DCMMV8V8SN	DCMMZ8V8SN	DCMMN8V8SN
DC	13W6	DCMMV13V6SN	DCMMZ13V6SN	DCMMN13V6SN
DC	17W5	DCMMV17V5SN	DCMMZ17V5SN	DCMMN17V5SN
DC	21WA4	DCMMV21VA4SN	DCMMZ21VA4SN	DCMMN21VA4SN
DC	25W3	DCMMV25V3SN	DCMMZ25V3SN	DCMMN25V3SN
DC	27W2	DCMMV27V2SN	DCMMZ27V2SN	DCMMN27V2SN

Notes: For DD shell size, see page 165.
♣ Keyed.

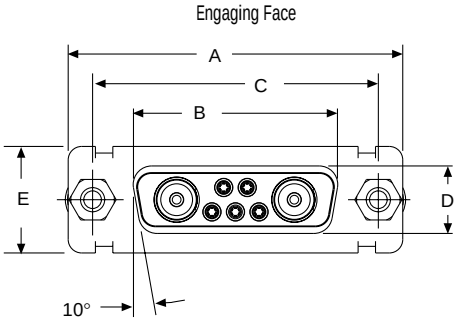

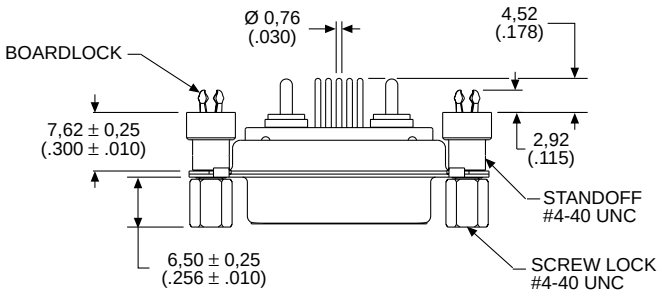

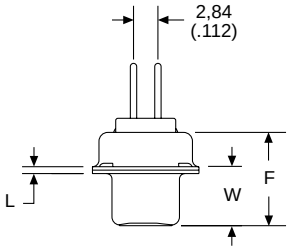

Hardware and high voltage contact removed for clarity.

Dimensions

Receptacle Shell Size	A ±0,38 (.015)	B ±0,13 (.005)	C ±0,13 (.005)	D ±0,13 (.005)	E ±0,38 (.015)	F ±0,25 (.010)	W ±0,38 (.015)	L ±0,25 (.010)
DE	30,81 (1.213)	16,33 (.643)	24,99 (.984)	7,90 (.311)	12,55 (.494)	10,90 (.429)	6,94 (.273)	0,76 (.030)
DA	39,14 (1.541)	24,66 (.971)	33,32 (1.312)	7,90 (.311)	12,55 (.494)	10,90 (.429)	6,94 (.273)	0,76 (.030)
DB	53,04 (2.088)	38,38 (1.511)	47,04 (1.852)	7,90 (.311)	12,55 (.494)	10,90 (.429)	6,94 (.273)	0,76 (.030)
DC	69,32 (2.729)	54,84 (2.159)	63,50 (2.500)	7,90 (.311)	12,55 (.494)	10,90 (.429)	6,94 (.273)	0,76 (.030)

High Voltage Straight PCB (Size DD)

Plug

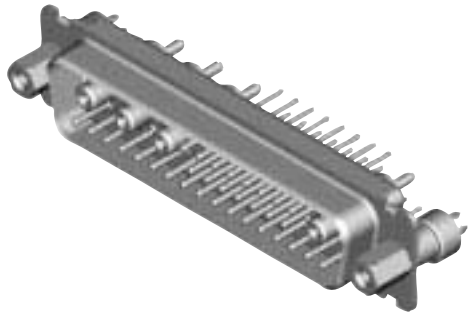

Part Numbers with Standoff #4-40 UNC

Shell Size	Layout	Part Number Without Screw Locks Without Boardlocks	Part Number Without Screw Locks With Boardlocks	Part Number With Screw Locks With Boardlocks
DD	24W7	DDMMV24V7PN	DDMMZ24V7PN	DDMMN24V7PN
DD	36W4	DDMMV36V4PN	DDMMZ36V4PN	DDMMN36V4PN
DD	43W2	DDMMV43V2PN	DDMMZ43V2PN	DDMMN43V2PN
DD	47W1	DDMMV47V1PN	DDMMZ47V1PN	DDMMN47V1PN

Reader's Resource
For contact cavity arrangements, see page 222.
For P.C. hole patterns, see page 256.
For panel cutouts, see page 221.
For hardware views (Standard), see page 226.

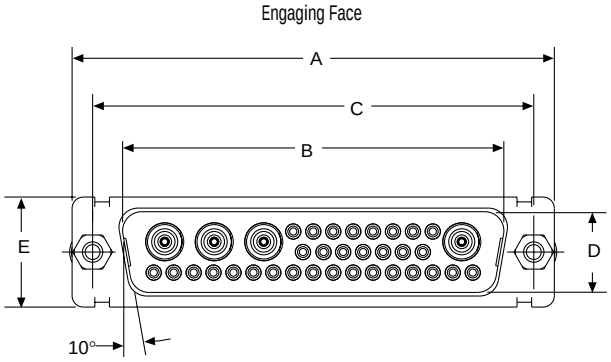

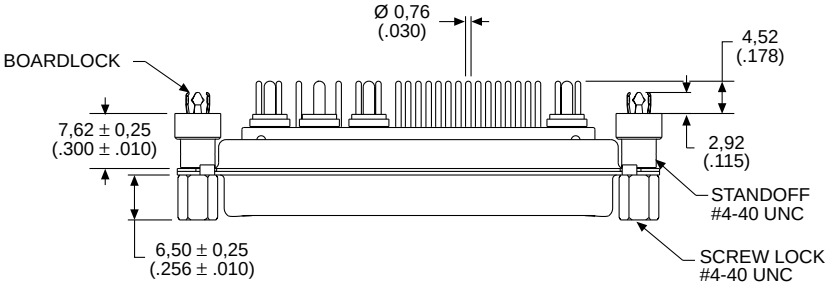

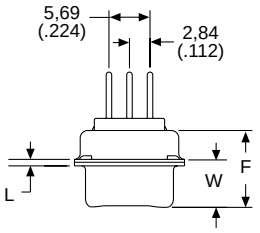

Hardware and high voltage contact removed for clarity.

Dimensions

Plug Shell Size	A ±0,38 (.015)	B ±0,13 (.005)	C ±0,13 (.005)	D ±0,13 (.005)	E ±0,38 (.015)	F ±0,25 (.010)	W ±0,41 (.016)	L ±0,25 (.010)
DD	66,93 (2.635)	52,81 (2.079)	61,11 (2.406)	11,07 (.436)	15,37 (.605)	10,82 (.426)	6,84 (.269)	0,99 (.039)

Dimensions are shown in mm (inch)
Dimensions subject to change

High Voltage Straight PCB (Size DD)

Receptacle

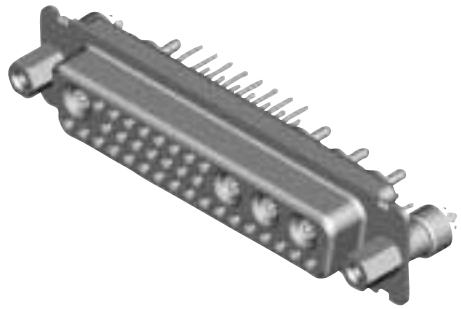

Part Numbers with Standoff #4-40 UNC

Shell Size	Layout	Part Number Without Screw Locks Without Boardlocks	Part Number Without Screw Locks With Boardlocks	Part Number With Screw Locks With Boardlocks
DD	24W7	DDMMV24V7SN	DDMMZ24V7SN	DDMMN24V7SN
DD	36W4	DDMMV36V4SN	DDMMZ36V4SN	DDMMN36V4SN
DD	43W2	DDMMV43V2SN	DDMMZ43V2SN	DDMMN43V2SN
DD	47W1	DDMMV47V1SN	DDMMZ47V1SN	DDMMN47V1SN

Reader's Resource
For contact cavity arrangements, see page 223.
For P.C. hole patterns, see page 259.
For panel cutouts, see page 221.
For hardware views (Standard), see page 226.

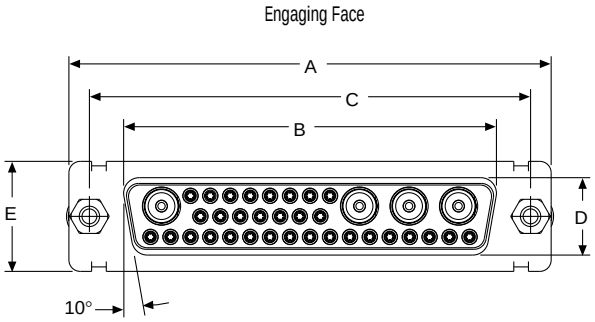

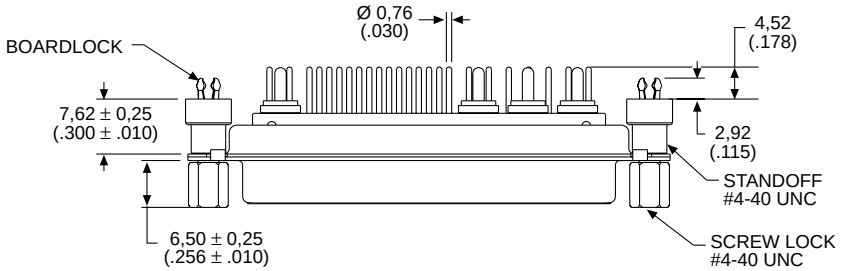

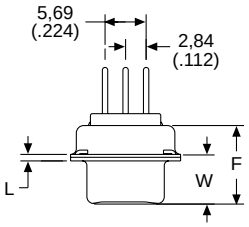

Hardware and high voltage contacts removed for clarity

Dimensions

Receptacle Shell Size	A ±0,38 (.015)	B ±0,13 (.005)	C ±0,13 (.005)	D ±0,13 (.005)	E ±0,38 (.015)	F ±0,25 (.010)	W ±0,38 (.015)	L ±0,25 (.010)
DD	66,93 (2.635)	52,42 (2.064)	61,11 (2.406)	10,74 (.423)	15,37 (.605)	10,90 (.429)	6,94 (.273)	0,76 (.030)

Cable Solder Cup

Plug

Reader's Resource
For contact cavity arrangements, see page 222.
For panel cutouts, see page 221.
For hardware views (Standard), see page 226.

Part Numbers

Shell Size	Layout	Through Hole	Dual Float Mount	Clinch Nut #4-40 UNC
DE	5W1	DEMM5W1P	DEMMY5W1P	DEMME5W1P
DA	7W2	DAMM7W2P	DAMMY7W2P	DAMME7W2P
DA	11W1	DAMM11W1P	DAMMY11W1P	DAMME11W1P
DA	3W3	DAMM3W3P	DAMMY3W3P	DAMME3W3P
DA	3WK3♣	DAMM3WK3P	DAMMY3WK3P	DAMME3WK3P
DB	5W5	DBMMP5W5P	DBMMY5W5P	DBMME5W5P
DB	9W4	DBMM9W4P	DBMMY9W4P	DBMME9W4P
DB	13W3	DBMM13W3P	DBMMY13W3P	DBMME13W3P
DB	17W2	DBMM17W2P	DBMMY17W2P	DBMME17W2P
DB	21W1	DBMM21W1P	DBMMY21W1P	DBMME21W1P
DC	8W8	DCMM8W8P	DCMMY8W8P	DCMME8W8P
DC	13W6	DCMM13W6P	DCMMY13W6P	DCMME13W6P
DC	17W5	DCMM17W5P	DCMMY17W5P	DCMME17W5P
DC	21WA4	DCMM21WA4P	DCMMY21WA4P	DCMME21WA4P
DC	25W3	DCMM25W3P	DCMMY25W3P	DCMME25W3P
DC	27W2	DCMM27W2P	DCMMY27W2P	DCMME27W2P
DD	24W7	DDMM24W7P	DDMMY24W7P	DDMME24W7P
DD	36W4	DDMM36W4P	DDMMY36W4P	DDMME36W4P
DD	43W2	DDMM43W2P	DDMMY43W2P	DDMME43W2P
DD	47W1	DDMM47W1P	DDMMY47W1P	DDMME47W1P

Note: ♣ Keyed.

Engaging Face

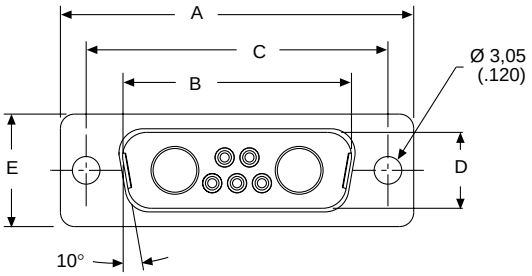

DD Configuration

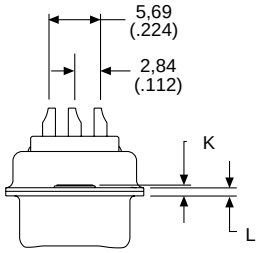

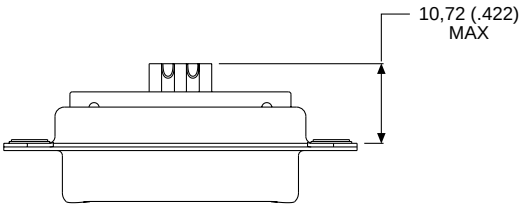

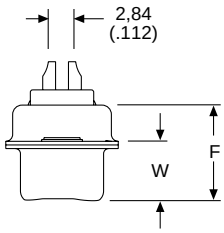

Dimensions

Shell Size	A ±0,38 (.015)	B ±0,13 (.005)	C ±0,13 (.005)	D ±0,13 (.005)	E ±0,38 (.015)	F ±0,25 (.010)	W ±0,368 (.0145)	W ±0,41 (.016)	K ±0,317 (.0125)	K ±0,25 (.010)	L ±0,25 (.010)
DE	30,81 (1.213)	16,92 (.666)	24,99 (.984)	8,36 (.329)	12,55 (.494)	10,72 (.422)	6,693 (.2635)	—	1,206 (.0475)	—	0,76 (.030)
DA	39,14 (1.541)	25,25 (.994)	33,32 (1.312)	8,36 (.329)	12,55 (.494)	10,72 (.422)	6,693 (.2635)	—	1,206 (.0475)	—	0,76 (.030)
DB	53,04 (2.088)	38,96 (1.534)	47,04 (1.852)	8,36 (.329)	12,55 (.494)	10,82 (.426)	—	6,84 (.269)	—	1,52 (.060)	0,99 (.039)
DC	69,32 (2.729)	55,42 (2.182)	63,50 (2.500)	8,36 (.329)	12,55 (.494)	10,82 (.426)	—	6,84 (.269)	—	1,52 (.060)	0,99 (.039)
DD	66,93 (2.635)	52,81 (2.079)	61,11 (2.406)	11,07 (.436)	15,37 (.605)	10,82 (.426)	—	6,84 (.269)	—	1,52 (.060)	0,99 (.039)

Dimensions are shown in mm (inch)
Dimensions subject to change

Cable Solder Cup

Receptacle

Reader's Resource

For contact cavity arrangements, see page 223.
For panel cutouts, see page 221.
For hardware views (Standard), see page 226.

Part Numbers

Shell Size	Layout	Through Hole	Dual Float Mount	Clinch Nut #4-40 UNC
DE	5W1	DEMM5W1S	DEMMY5W1S	DEMME5W1S
DA	7W2	DAMM7W2S	DAMMY7W2S	DAMME7W2S
DA	11W1	DAMM11W1S	DAMMY11W1S	DAMME11W1S
DA	3W3	DAMM3W3S	DAMMY3W3S	DAMME3W3S
DA	3WK3♣	DAMM3WK3S	DAMMY3WK3S	DAMME3WK3S
DB	5W5	DBMM5W5S	DBMMY5W5S	DBMME5W5S
DB	9W4	DBMM9W4S	DBMMY9W4S	DBMME9W4S
DB	13W3	DBMM13W3S	DBMMY13W3S	DBMME13W3S
DB	17W2	DBMM17W2S	DBMMY17W2S	DBMME17W2S
DB	21W1	DBMM21W1S	DBMMY21W1S	DBMME21W1S
DC	8W8	DCMM8W8S	DCMMY8W8S	DCMME8W8S
DC	13W6	DCMM13W6S	DCMMY13W6S	DCMME13W6S
DC	17W5	DCMM17W5S	DCMMY17W5S	DCMME17W5S
DC	21WA4	DCMM21WA4S	DCMMY21WA4S	DCMME21WA4S
DC	25W3	DCMM25W3S	DCMMY25W3S	DCMME25W3S
DC	27W2	DCMM27W2S	DCMMY27W2S	DCMME27W2S
DD	24W7	DCMM24W7S	DCMMY24W7S	DCMME24W7S
DD	36W4	DCMM36W4S	DCMMY36W4S	DCMME36W4S
DD	43W2	DCMM43W2S	DCMMY43W2S	DCMME43W2S
DD	47W1	DCMM47W1S	DCMMY47W1S	DCMME47W1S

Note: ♣ Keyed.

Engaging Face

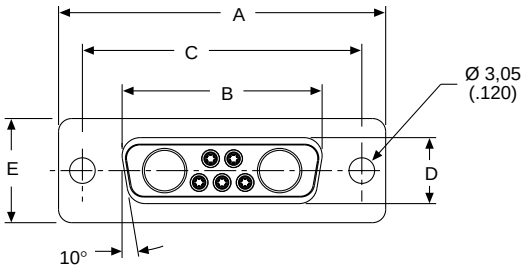

DD Configuration

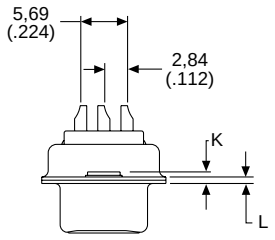

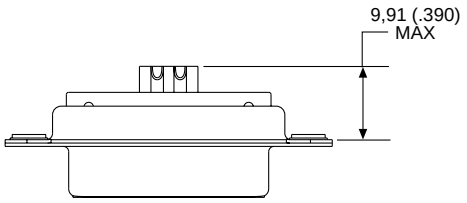

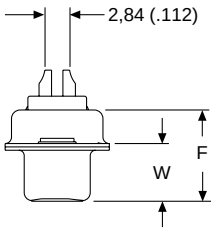

Dimensions

Shell Size	A ±0,38 (.015)	B ±0,13 (.005)	C ±0,13 (.005)	D ±0,13 (.005)	E ±0,38 (.015)	F ±0,25 (.010)	W ±0,38 (.015)	K ±0,318 (.0125)	L ±0,25 (.010)
DE	30,81 (1.123)	16,33 (.643)	24,99 (.984)	7,90 (.311)	12,55 (.494)	10,90 (.429)	6,94 (.273)	1,206 (.0475)	0,76 (.030)
DA	39,14 (1.541)	24,66 (.971)	33,32 (1.312)	7,90 (.311)	12,55 (.494)	10,90 (.429)	6,94 (.273)	1,206 (.0475)	0,76 (.030)
DB	53,04 (2.088)	38,38 (1.511)	47,04 (1.852)	7,90 (.311)	12,55 (.494)	10,90 (.429)	6,94 (.273)	1,206 (.0475)	0,76 (.030)
DC	69,32 (2.729)	54,84 (2.159)	63,50 (2.500)	7,90 (.311)	12,55 (.494)	10,90 (.429)	6,94 (.273)	1,206 (.0475)	0,76 (.030)
DD	66,93 (2.635)	52,42 (2.064)	61,11 (2.406)	10,74 (.423)	15,37 (.605)	10,90 (.429)	6,94 (.273)	1,206 (.0475)	0,76 (.030)

ITT Cannon has a long history of providing high performance D Subminiature connectors for space applications (qualified by NASA/GFSC and the European Space Agency). Space/High Reliabilty D*M and D*MA connectors meet stringent tests for outgassing and residual magnetism and are suitable for use in space, medical, and high performance military/aerospace applications. D*M and D*MA connectors are designed to be comparable to MIL-C-24308. The newest product group is High Density D*MA crimp connectors.

Applications
- Space - Low/High Orbit Satellites
- Medical

Product Features

Non-Magnetic

No Outgassing

Specifications

Temperature Rating	−65° at 125°C
Signal Contact Current Rating	5 A (20 AWG)
Signal Contact Resistance	55 millivolt max. at 7.5 A test current
Wire Accommodation (Solder)	20 AWG max.
Wire Accommodation (Crimp)	18/30 AWG
Coaxial Impedance	50 Ohm
Loss VSWR	Less than 1,3 - 1,0 up to 500 Mhz
Coaxial Insertion Loss	1db loss at 500 Mhz

Dielectric Withstanding Voltage

		Altitude (meter/feet)							
		Sea Level	Sea Level	6 096/20 000	6 096/20 000	15 240/50 000	15 240/50 000	21 336/70 000	21 336/70 000
Average Flashover		1500/1700	1500/1700	1000/1000	1000/1000	500/650	500/650	500/500	500/500
Test		1000/1250	1000/1250	650/750	650/750	325/475	325/475	325/375	325/375
Type of Contact		90°	Straight	90°	Straight	90°	Straight	90°	Straight
Center Conductor to Coaxial Shell	Average	1200	1500	900	1000	600	700	400	500
	Flashover Test	800	1000	600	550	400	475	275	325
Coaxial Shell to Nearest Solder Cup Contact	Average	—	1500	—	1500	—	900	—	650
	Flashover Test	—	1000	—	1000	—	800	—	425
High Power Contact and/or Coaxial Shell to Plug Shell	Average	1500	1500	1000	1000	500	500	500	500
	Flashover Test	1000	1000	650	650	325	325	325	325
Size 20 Signal Contact	Average	1200	1200	1000	1000	650	650	500	500
	Flashover Test	1250	1250	750	750	475	475	375	375

All voltage figures are rms AC 60 rms cps. Measured at approximately +25°C, 50% rh. For additional performance specifications refer to 24308-Style.

Residual Magnetism Level

Residual Magnetism	Suffix Code
20 000 Gamma	NM
200 Gamma	NMB

Note: NMC is available by special request. Consult factory for details.

Dimensions are shown in mm (inch)
Dimensions subject to change

NASA/GSFC Cross Reference

NASA/GSFC Part Number	ITT Cannon Part Number	NASA/GSFC Part Number	ITT Cannon Part Number	NASA/GSFC Part Number	ITT Cannon Part Number
GO8P1	030-2042-002	311-P-10-12S-B-15	DBM13W3S-NMB-76	311-P-10-24P-B-12	DDM43W2P-NMB-77
GO8S1	031-1147-002	311-P-10-12S-C-15	DBM-13W3S-NMC-76	311-P-10-24S-C-12	DDM-43W2S-NMB-77
S-311-P-4/6GCP1	DM53740-17	311-P-10-13P-B-12	DBM17W2PNMB77	311-P-10-24S-C-15	DDM-43W2S-NMC-76
S-311-P-4/6GCP2	DM53740-15	311-P-10-13P-B-15	DBM-17W2P-NMB-76	311-P-10-25P-C-15	DDM47W1P-NMC-76
S-311-P-4/6GCP3	DM53740-16	311-P-10-13P-C-12	DBM17W2P-NMC-77	311-P-10-25S-C-15	DDM-47W1S-NMC-76
S-311-P-4/6GCP4	DM53740-18	311-P-10-13P-C-15	DBM-17W2P-NMC-76	311-P-10-3S-B-12	DBM25PNMB77
S-311-P-4/6GCRP1	DM53741-12	311-P-10-13S-B-12	DBM17W2SNMB77	311-P-10-3P-B-15	DBM25PNMB76
S-311-P-4/6GCRP2	DM53741-11	311-P-10-13S-C-12	DBM-17W2S-NMC-77	311-P-10-3P-C-12	DBM25PNMC77
S-311-P-4/6GCRP3	DM53741-10	311-P-10-13S-C-15	DBM-17W2S-NMC-76	311-P-10-3P-C-15	DBM25PNMC76
S-311-P-4/6GCRP4	DM53741-13	311-P-10-14P-B-12	DBM-21W1P-NMB-77	311-P-10-3S-B-12	DBM25PNMB77
S-311-P-4/6GCRS1	DM53743-18	311-P-10-14P-B-15	DBM-21W1P-NMB-76	311-P-10-3S-B-15	DBM-25S-NMB-76
S-311-P-4/6GCRS2	DM53743-16	311-P-10-14S-B-12	DBM-21W1S-NMB-77	311-P-10-3S-C-12	DBM-25S-NMC-77
S-311-P-4/6GCRS3	DM53743-17	311-P-10-14S-B-15	DBM-21W1S-NMB-76	311-P-10-3S-C-15	DBM-25S-NMC-76
S-311-P-4/6GCRS4	DM53743-19	311-P-10-14S-C-15	DBM-21W1S-NMC-76	311-P-10-4P-B-12	DCM37PNMB77
S-311-P-4/6GCS1	DM53742-18	311-P-10-15P-B-12	DCM-8W8P-NMB-77	311-P-10-4P-B-15	DCM37PNMB76
S-311-P-4/6GCS2	DM53742-16	311-P-10-15P-B-15	DCM8W8PNMB76	311-P-10-4P-C-12	DCM-37P-NMC-77
S-311-P-4/6GCS3	DM53742-17	311-P-10-15P-C-12	DCM-8W8P-NMC-77	311-P-10-4P-C-15	DCM37PNMC76
S-311-P-4/6GCS4	DM53742-19	311-P-10-15P-C-15	DCM8W8PNMC76	311-P-10-4S-B-12	DCM37SNMB77
S-311-P-4/6GHP6	DM51157-8	311-P-10-15S-B-12	DCM-8W8S-NMB-77	311-P-10-4S-B-15	DCM-37S-NMB-76
S-311-P-4/6GHRP6	DM51157-5005	311-P-10-15S-B-15	DCM8W8SNMB76	311-P-10-4S-C-12	DCM-37S-NMC-77
S-311-P-4/6GHRS6	DM51155-5005	311-P-10-15S-C-12	DCM-8W8S-NMC-77	311-P-10-4S-C-15	DCM-37S-NMC-76
S-311-P-4/6GHS6	DM51155-7	311-P-10-15S-C-15	DCM-8W8S-MNC-76	311-P-10-5P-B-12	DDM50PNMB77
311P409-1P-B-12	DEMA9PNMBK47FO	311-P-10-16P-B-12	DCM-13W6P-NMB-77	311-P-10-5P-B-15	DDM50PNMB76
311P409-1P-B-15	DEMAK9PNMBK47FO	311-P-10-16P-B-15	DCM-13W6P-NMB-76	311-P-10-5P-C-12	DDM-50P-NMC-77
311P409-1S-B-12	DEMA9SNMBK47FO	311-P-10-16P-C-12	DCM-13W6P-NMC-77	311-P-10-5P-C-15	DDM50PNMC76
311P409-1S-B-15	DEMAK9SNMBK47FO	311-P-10-16P-C-15	DCM-13W6P-NMC-76	311-P-10-5S-B-12	DDM50SNMB77
311P409-2P-B-12	DEMA15PNMBK47FO	311-P-10-16S-B-12	DCM-13W6S-NMB-77	311-P-10-5S-B-15	DDM50SNMB76
311P409-2P-B-15	DEMAK15PNMBK47FO	311-P-10-16S-C-12	DCM-13W6S-NMC-77	311-P-10-5S-C-12	DDM-50S-NMC-77
311P409-2S-B-12	DEMA15SNMBK47FO	311-P-10-16S-C-15	DCM13W6SNMC76	311-P-10-5S-C-15	DDM-50S-NMC-76
311P409-2S-B-15	DEMAK15SNMBK47FO	311-P-10-17P-B-12	DCM17W5PNMB77	311-P-10-6P-B-12	DEM-5W1P-NMB-77
311P409-3P-B-12	DEMA25PNMBK47FO	311-P-10-17P-B-15	DCM-17W5P-NMB-76	311-P-10-6P-B-15	DEM-5W1P-NMB-76
311P409-3P-B-15	DEMAK25PNMBK47FO	311-P-10-17P-C-12	DCM-17W5P-NMC-77	311-P-10-6P-C-15	DEM-5W1P-NMC-76
311P409-3S-B-12	DEMA25SNMBK47FO	311-P-10-17P-C-15	DCM-17W5P-NMC-76	311-P-10-6S-B-12	DEM-5W1S-NMB-77
311P409-3S-B-15	DEMAK25SNMBK47FO	311-P-10-17S-B-12	DCM-17W5S-NMB-77	311-P-10-6P-C-15	DEM-5W1S-NMC-76
311P409-4P-B-12	DEMA37PNMBK47FO	311-P-10-17S-B-15	DCM17W5S-NMB-76	311-P-10-7P-B-12	DAM3W3PNMC76
311P409-4P-B-15	DEMAK37PNMBK47FO	311-P-10-17S-C-12	DCM-17W5S-NMC-77	311-P-10-7P-B-15	DAM-3W3P-NMB-76
311P409-4S-B-12	DEMA37SNMBK47FO	311-P-10-17S-C-15	DCM-17W5S-NMC-76	311-P-10-7P-C-12	DAM3W3P-NMC-77
311P409-4S-B-15	DEMAK37SNMBK47FO	311-P-10-18P-B-12	DCM-21WA4P-NMB-77	311-P-10-7P-C-15	DAM-3W3P-NMC-76
311P409-5P-B-12	DEMA50PNMBK47FO	311-P-10-18P-B-12	DCM21WA4P-NMB-76	311-P-10-7S-B-12	DAM3W3SNMB77
311P409-5S-B-15	DEMAK50PNMBK47FO	311-P-10-18P-C-15	DCM-21WA4P-NMC-76	311-P-10-7S-B-15	DAM3W3SNMB76
311P409-5S-B-12	DEMA50SNMBK47FO	311-P-10-18S-B-12	DCM-21WA4S-NMB-77	311-P-10-7S-C-12	DAM3W3S-NMC-76
311P409-5S-B-15	DEMAK50PNMBK47FO	311-P-10-18S-B-15	DCM21WA4S-NMB-76	311-P-10-7S-C-15	DAM-3W3S-NMC-76
S-311-P-4/10G1OP1	330-5291-081-02	311-P-10-19P-B-12	DCM-21W4P-NMB-77	311-P-10-8P-B-12	DAM-7W2P-NMB-77
S-311-P-4/10G1OS1	031-1007-052-05	311-P-10-19S-B-12	DCM-21W4S-NMB-77	311-P-10-8P-B-15	DAM-7W2P-NMB-76
311-P-10-B-1S-B-15	DEMB9S-NMB-76	311-P-10-19S-C-15	DCM21W4S-NMC-76	311-P-10-8P-C-15	DAM-7W2P-NMC-76
311-P-10-B-4S-B-15	DCMB37S-NMB-76	311-P-10-2P-B-12	DAM15PNMB77	311-P-10-8S-B-12	DAM-7W2S-NMB-77
311-P-10-1P-B-12	DEMPPNMB77	311-P-10-2P-B-15	DAM15PNMB76	311-P-10-8P-C-12	DAM7W2S-NMC-77
311-P-10-1P-B-15	DEM-9P-NMB-76	311-P-10-2P-C-12	DAM15PNMC77	311-P-10-8P-C-15	DAM-7W2S-NMC-76
311-P-10-1P-C-12	DEM9PNMC77	311-P-10-2P-C-15	DAM15PNMC76	311-P-10-9P-B-12	DAM-11W1P-NMB-77
311-P-10-1P-C-15	DEM9PNMC76	311-P-10-2S-B-12	DAM15SNMB77	311-P-10-9P-B-15	DAM-11W1P-NMB-76
311-P-10-1S-B-12	DEM9SNMB77	311-P-10-2S-B-15	DAM-15S-NMB-76	311-P-10-9P-C-12	DAM-11W1P-NMC-77
311-P-10-1S-B-15	DEM-9S-NMB-76	311-P-10-2S-C-15	DAM-15S-NMC-76	311-P-10-9P-C-15	DAM-11W1P-NMC-76
311-P-10-1S-C-12	DEM-9S-NMC-77	311-P-10-2S-C-15	DAM-15S-NMC-76	311-P-10-9S-B-12	DAM-11W1S-NMB-77
311-P-10-1S-C-15	DEM9SNMC76	311-P-10-20P-B-12	DCM-25W3P-NMB-77	311-P-10-9S-B-15	DAM-11W1S-NMB-76
311-P-10-10P-B-12	DBM5W5PNMB77	311-P-10-20P-C-15	DCM25W3P-NMB-76	311-P-10-9S-C-12	DAM-11W1S-NMC-77
311-P-10-10P-B-15	DBM-5W5P-NMB-76	311-P-10-20S-B-12	DCM-25W36-NMB-77	311-P-10-9S-C-15	DAM-11W1S-NMC-76
311-P-10-10P-C-12	DBM-5W5P-NMC-77	311-P-10-20S-C-12	DCM-25W3S-NMC-77	311-P-10B-1S-B-12	DEMB9SNMB77
311-P-10-10P-C-15	DBM-5W5P-NMC-76	311-P-10-20S-C-15	DCM-25W3S-NMC-76	311-P-10B-1S-C-12	DEMB-9S-NMC-77
311-P-10-10S-B-12	DBM-5W5S-NMB-77	311-P-10-21P-C-15	DCM27W2P-NMC-76	311-P-10B-1S-C-15	DEMB9S-NMC-76
311-P-10-10S-B-15	DBM-5W5S-NMB-76	311-P-10-21S-C-15	DCM-27W2S-NMC-76	311-P-10B-13S-B-15	DBMB-17W2S-NMB-76
311-P-10-10S-C-12	DBM-5W5S-NMC-77	311-P-10-22P-B-12	DDM-24W7P-NMB-77	311-P-10B-17S-B-15	DCMB-17W5S-NMB-76
311-P-10-10S-C-15	DBM-5W5S-NMC-76	311-P-10-22P-B-15	DDM24W7PNMB76	311-P-10B-2S-B-12	DAMB15SNMB77
311-P-10-11P-B-12	DBM-9W4P-NMB-77	311-P-10-22P-C-15	DDM-24W7P-NMC-76	311-P-10B-2S-C-12	DAMB-15S-NMC-77
311-P-10-11P-C-15	DBM-9W4P-NMC-76	311-P-10-22S-B-12	DDM24W7SNMB77	311-P-10B-2S-C-15	DAMB15SNMC76
311-P-10-11S-B-12	DBM-9W4S-NMB-77	311-P-10-22S-B-15	DDM-24W7S-NMB-76	311-P-10B-22S-B-15	DDMB-247S-NMB-76
311-P-10-11S-C-15	DBM-9W4S-NMC-76	311-P-10-22S-C-15	DDM-24W7S-NMC-76	311-P-10B-3S-B-12	DBMB-25S-NMB-77
311-P-10-12P-B-12	DBM13W3P-NMB-77	311-P-10-23P-B-12	DDM-36W4P-NMB-77	311-P-10B-3S-B-15	DBMB-25S-NMB-76
311-P-10-12P-B-15	DBM-13W3P-NMB-76	311-P-10-23S-B-12	DDM-36W4S-NMB-77	311-P-10B-3S-C-12	DBMB-25S-NMC-77
311-P-10-12P-C-15	DBM-13W3P-NMC-76	311-P-10-23S-B-15	DDM36W4SNMB76	311-P-10B-3S-C-15	DBMB25SNMC76
311-P-10-12S-B-12	DBM-13W3S-NMB-77	311-P-10-23S-C-15	DDM-36W4S-NMC-76	311-P-10B-4S-B-12	DCMB-37S-NMB-77

NASA/GSFC Cross Reference

NASA/GSFC Part Number	ITT Cannon Part Number	NASA/GSFC Part Number	ITT Cannon Part Number	NASA/GSFC Part Number	ITT Cannon Part Number
311-P-10B-4S-C-12	DCMB-37S-NMC-77	311-P-10B-5S-C-12	DDMB-50S-NMC-77	311-P-10B-8S-B-15	DAMB-7W2S-NMB-76
311-P-10B-4S-C-15	DCMB37S-NMC-76	311-P-10B-5S-C-15	DDMB50S-NMC-76	311-P-10B-9S-B-12	DAMB-11W1S-NMB-77
311-P-10B-5S-B-12	DDMB-50S-NMB-77	311-P-10B-6S-B-15	DEMB-5W1S-NMB-76		
311-P-10B-5S-B-15	DDMB50S-NMB-76	311-P-10B-8S-B-12	DAMB-7W2S-NMB-77		

ESA/SCC Cross Reference

ESA–SCC Part Number	ITT Cannon Part Number	ESA–SCC Part Number	ITT Cannon Part Number	ESA–SCC Part Number	ITT Cannon Part Number
340100101B DEM5W1SNMB	DEM5W1SNMBK52	340100101B DBM17W2POL3NMB	DBM17W2POL3NMBK52	340100101B DAM7W2P1A7NNMB	DAM7W2P1A7NNMBK52
340100101B DAM3W3SNMB	DAM3W3SNMBK52	340100101B DBM21W1POL3NMB	DBM21W1POL3NMBK52	340100101B DAM11W1P1A7NNMB	DAM11W1P1A7NNMBK52
340100101B DAM7W2SNMB	DAM7W2SNMBK52	340100101B DCM13W6POL3NMB	DCM13W6POL3NMBK52	340100101B DBM9W4P1A7NNMB	DBM9W4P1A7NNMBK52
340100101B DAM11W1SNMB	DAM11W1SNMBK52	340100101B DCM17W5POL3NMB	DCM17W5POL3NMBK52	340100101B DBM13W3P1A7NNMB	DBM13W3P1A7NNMBK52
340100101B DBM5W5SNMB	DBM5W5SNMBK52	340100101B DCM21WA4POL3NMB	DCM21WA4POL3NMBK52	340100101B DBM17W2P1A7NNMB	DBM17W2P1A7NNMBK52
340100101B DBM9W4SNMB	DBM9W4SNMBK52	340100101B DCM25W3POL3NMB	DCM25W3POL3NMBK52	340100101B DBM21W1P1A7NNMB	DBM21W1P1A7NNMBK52
340100101B DBM13W3SNMB	DBM13W3SNMBK52	340100101B DCM27W2POL3NMB	DCM27W2POL3NMBK52	340100101B DCM13W6P1A7NNMB	DCM13W6P1A7NNMBK52
340100101B DBM17W2SNMB	DBM17W2SNMBK52	340100101B DDM24W7POL3NMB	DDM24W7POL3NMBK52	340100101B DCM17W5P1A7NNMB	DCM17W5P1A7NNMBK52
340100101B DBM21W1SNMB	DBM21W1SNMBK52	340100101B DDM36W4POL3NMB	DDM36W4POL3NMBK52	340100101B DCM21WA4P1A7NNMB	DCM21WA4P1A7NNMBK52
340100101B DCM8W8SNMB	DCM8W8SNMBK52	340100101B DDM43W2POL3NMB	DDM43W2POL3NMBK52	340100101B DCM25W3P1A7NNMB	DCM25W3P1A7NNMBK52
340100101B DCM13W6SNMB	DCM13W6SNMBK52	340100101B DDM47W1POL3NMB	DDM47W1POL3NMBK52	340100101B DCM27W2P1A7NNMB	DCM27W2P1A7NNMBK52
340100101B DCM17W5SNMB	DCM17W5SNMBK52	340100101B DEM5W1S1A0NNMB	DEM5W1S1A0NNMBK52	340100101B DDM24W7P1A7NNMB	DDM24W7P1A7NNMBK52
340100101B DCM21WA4SNMB	DCM21WA4SNMBK52	340100101B DAM7W2S1A0NNMB	DAM7W2S1A0NNMBK52	340100101B DDM36W4P1A7NNMB	DDM36W4P1A7NNMBK52
340100101B DCM25W3SNMB	DCM25W3SNMBK52	340100101B DAM11W1S1A0NNMB	DAM11W1S1A0NNMBK52	340100101B DDM43W2P1A7NNMB	DDM43W2P1A7NNMBK52
340100101B DCM27W2SNMB	DCM27W2SNMBK52	340100101B DBM9W4S1A0NNMB	DBM9W4S1A0NNMBK52	340100101B DDM47W1P1A7NNMB	DDM47W1P1A7NNMBK52
340100101B DDM24W7SNMB	DDM24W7SNMBK52	340100101B DBM13W3S1A0NNMB	DBM13W3S1A0NNMBK52	340100101B DEM5W1S1A9NNMB	DEM5W1S1A9NNMBK52
340100101B DDM36W4SNMB	DDM36W4SNMBK52	340100101B DBM17W2S1A0NNMB	DBM17W2S1A0NNMBK52	340100101B DAM7W2S1A9NNMB	DAM7W2S1A9NNMBK52
340100101B DDM43W2SNMB	DDM43W2SNMBK52	340100101B DBM21W1S1A0NNMB	DBM21W1S1A0NNMBK52	340100101B DAM11W1S1A9NNMB	DAM11W1S1A9NNMBK52
340100101B DDM47W1SNMB	DDM47W1SNMBK52	340100101B DCM13W6S1A0NNMB	DCM13W6S1A0NNMBK52	340100101B DBM9W4S1A9NNMB	DBM9W4S1A9NNMBK52
340100101B DEM5W1PNMB	DEM5W1PNMBK52	340100101B DCM17W5S1A0NNMB	DCM17W5S1A0NNMBK52	340100101B DBM13W3S1A9NNMB	DBM13W3S1A9NNMBK52
340100101B DAM3W3PNMB	DAM3W3PNMBK52	340100101B DCM21WA4S1A0NNMB	DCM21WA4S1A0NNMBK52	340100101B DBM17W2S1A9NNMB	DBM17W2S1A9NNMBK52
340100101B DAM7W2PNMB	DAM7W2PNMBK52	340100101B DCM25W3S1A0NNMB	DCM25W3S1A0NNMBK52	340100101B DBM21W1S1A9NNMB	DBM21W1S1A9NNMBK52
340100101B DAM11W1PNMB	DAM11W1PNMBK52	340100101B DCM27W2S1A0NNMB	DCM27W2S1A0NNMBK52	340100101B DCM13W6S1A9NNMB	DCM13W6S1A9NNMBK52
340100101B DBM5W5PNMB	DBM5W5PNMBK52	340100101B DDM24W7S1A0NNMB	DDM24W7S1A0NNMBK52	340100101B DCM17W5S1A9NNMB	DCM17W5S1A9NNMBK52
340100101B DBM9W4PNMB	DBM9W4PNMBK52	340100101B DDM36W4S1A0NNMB	DDM36W4S1A0NNMBK52	340100101B DCM21WA4S1A9NNMB	DCM21WA4S1A9NNMBK52
340100101B DBM13W3PNMB	DBM13W3PNMBK52	340100101B DDM43W2S1A0NNMB	DDM43W2S1A0NNMBK52	340100101B DCM25W3S1A9NNMB	DCM25W3S1A9NNMBK52
340100101B DBM17W2PNMB	DBM17W2PNMBK52	340100101B DDM47W1S1A0NNMB	DDM47W1S1A0NNMBK52	340100101B DCM27W2S1A9NNMB	DCM27W2S1A9NNMBK52
340100101B DBM21W1PNMB	DBM21W1PNMBK52	340100101B DEM5W1P1A0NNMB	DEM5W1P1A0NNMBK52	340100101B DDM24W7S1A9NNMB	DDM24W7S1A9NNMBK52
340100101B DCM8W8PNMB	DCM8W8PNMBK52	340100101B DAM7W2P1A0NNMB	DAM7W2P1A0NNMBK52	340100101B DDM36W4S1A9NNMB	DDM36W4S1A9NNMBK52
340100101B DCM13W6PNMB	DCM13W6PNMBK52	340100101B DAM11W1P1A0NNMB	DAM11W1P1A0NNMBK52	340100101B DDM43W2S1A9NNMB	DDM43W2S1A9NNMBK52
340100101B DCM17W5PNMB	DCM17W5PNMBK52	340100101B DBM9W4P1A0NNMB	DBM9W4P1A0NNMBK52	340100101B DDM47W1S1A9NNMB	DDM47W1S1A9NNMBK52
340100101B DCM21WA4PNMB	DCM21WA4PNMBK52	340100101B DBM13W3P1A0NNMB	DBM13W3P1A0NNMBK52	340100101B DEM5W1P1A9NNMB	DEM5W1P1A9NNMBK52
340100101B DCM25W3PNMB	DCM25W3PNMBK52	340100101B DBM17W2P1A0NNMB	DBM17W2P1A0NNMBK52	340100101B DAM7W2P1A9NNMB	DAM7W2P1A9NNMBK52
340100101B DCM27W2PNMB	DCM27W2PNMBK52	340100101B DBM21W1P1A0NNMB	DBM21W1P1A0NNMBK52	340100101B DAM11W1P1A9NNMB	DAM11W1P1A9NNMBK52
340100101B DDM24W7PNMB	DDM24W7PNMBK52	340100101B DCM13W6P1A0NNMB	DCM13W6P1A0NNMBK52	340100101B DBM9W4P1A9NNMB	DBM9W4P1A9NNMBK52
340100101B DDM36W4PNMB	DDM36W4PNMBK52	340100101B DCM17W5P1A0NNMB	DCM17W5P1A0NNMBK52	340100101B DBM13W3P1A9NNMB	DBM13W3P1A9NNMBK52
340100101B DDM43W2PNMB	DDM43W2PNMBK52	340100101B DCM21WA4P1A0NNMB	DCM21WA4P1A0NNMBK52	340100101B DBM17W2P1A9NNMB	DBM17W2P1A9NNMBK52
340100101B DDM47W1PNMB	DDM47W1PNMBK52	340100101B DCM25W3P1A0NNMB	DCM25W3P1A0NNMBK52	340100101B DBM21W1P1A9NNMB	DBM21W1P1A9NNMBK52
340100101B DEM5W1SOL3NMB	DEM5W1SOL3NMBK52	340100101B DCM27W2P1A0NNMB	DCM27W2P1A0NNMBK52	340100101B DCM13W6P1A9NNMB	DCM13W6P1A9NNMBK52
340100101B DAM7W2SOL3NMB	DAM7W2SOL3NMBK52	340100101B DDM24W7P1A0NNMB	DDM24W7P1A0NNMBK52	340100101B DCM17W5P1A9NNMB	DCM17W5P1A9NNMBK52
340100101B DAM11W1SOL3NMB	DAM11W1SOL3NMBK52	340100101B DDM36W4P1A0NNMB	DDM36W4P1A0NNMBK52	340100101B DCM21WA4P1A9NNMB	DCM21WA4P1A9NNMBK52
340100101B DBM9W4SOL3NMB	DBM9W4SOL3NMBK52	340100101B DDM43W2P1A0NNMB	DDM43W2P1A0NNMBK52	340100101B DCM25W3P1A9NNMB	DCM25W3P1A9NNMBK52
340100101B DBM13W3SOL3NMB	DBM13W3SOL3NMBK52	340100101B DDM47W1P1A0NNMB	DDM47W1P1A0NNMBK52	340100101B DCM27W2P1A9NNMB	DCM27W2P1A9NNMBK52
340100101B DBM17W2SOL3NMB	DBM17W2SOL3NMBK52	340100101B DEM5W1S1A7NNMB	DEM5W1S1A7NNMBK52	340100101B DDM24W7P1A9NNMB	DDM24W7P1A9NNMBK52
340100101B DBM21W1SOL3NMB	DBM21W1SOL3NMBK52	340100101B DAM7W2S1A7NNMB	DAM7W2S1A7NNMBK52	340100101B DDM36W4P1A9NNMB	DDM36W4P1A9NNMBK52
340100101B DCM13W6SOL3NMB	DCM13W6SOL3NMBK52	340100101B DAM11W1S1A7NNMB	DAM11W1S1A7NNMBK52	340100101B DDM43W2P1A9NNMB	DDM43W2P1A9NNMBK52
340100101B DCM17W5SOL3NMB	DCM17W5SOL3NMBK52	340100101B DBM9W4S1A7NNMB	DBM9W4S1A7NNMBK52	340100101B DDM47W1P1A9NNMB	DDM47W1P1A9NNMBK52
340100101B DCM21WA4SOL3NMB	DCM21WA4SOL3NMBK52	340100101B DBM13W3S1A7NNMB	DBM13W3S1A7NNMBK52	340100101B DEM5W1SF179ANMB	DEM5W1SF179ANMBK52
340100101B DCM25W3SOL3NMB	DCM25W3SOL3NMBK52	340100101B DBM17W2S1A7NNMB	DBM17W2S1A7NNMBK52	340100101B DAM7W2SF179ANMB	DAM7W2SF179ANMBK52
340100101B DCM27W2OL3NMB	DCM27W2OL3NMBK52	340100101B DBM21W1S1A7NNMB	DBM21W1S1A7NNMBK52	340100101B DAM11W1SF179ANMB	DAM11W1SF179ANMBK52
340100101B DDM24W7SOL3NMB	DDM24W7SOL3NMBK52	340100101B DCM13W6S1A7NNMB	DCM13W6S1A7NNMBK52	340100101B DBM9W4SF179ANMB	DBM9W4SF179ANMBK52
340100101B DDM36W4SOL3NMB	DDM36W4SOL3NMBK52	340100101B DCM17W5S1A7NNMB	DCM17W5S1A7NNMBK52	340100101B DBM13W3SF179ANMB	DBM13W3SF179ANMBK52
340100101B DDM43W2SOL3NMB	DDM43W2SOL3NMBK52	340100101B DCM21WA4S1A7NNMB	DCM21WA4S1A7NNMBK52	340100101B DBM17W2SF179ANMB	DBM17W2SF179ANMBK52
340100101B DDM47W1SOL3NMB	DDM47W1SOL3NMBK52	340100101B DCM25W3S1A7NNMB	DCM25W3S1A7NNMBK52	340100101B DBM21W1SF179ANMB	DBM21W1SF179ANMBK52
340100101B DEM5W1POL3NMB	DEM5W1POL3NMBK52	340100101B DCM27W2S1A7NNMB	DCM27W2S1A7NNMBK52	340100101B DCM13W6SF179ANMB	DCM13W6SF179ANMBK52
340100101B DAM3W3POL3NMB	DAM3W3POL3NMBK52	340100101B DDM24W7S1A7NNMB	DDM24W7S1A7NNMBK52	340100101B DCM17W5SF179ANMB	DCM17W5SF179ANMBK52
340100101B DAM7W2POL3NMB	DAM7W2POL3NMBK52	340100101B DDM36W4S1A7NNMB	DDM36W4S1A7NNMBK52	340100101B DCM21WA4SF179ANMB	DCM21WA4SF179ANMBK52
340100101B DAM11W1POL3NMB	DAM11W1POL3NMBK52	340100101B DDM43W2S1A7NNMB	DDM43W2S1A7NNMBK52	340100101B DCM25W3SF179ANMB	DCM25W3SF179ANMBK52
340100101B DBM9W4POL3NMB	DBM9W4POL3NMBK52	340100101B DDM47W1S1A7NNMB	DDM47W1S1A7NNMBK52	340100101B DCM27W2SF179ANMB	DCM27W2SF179ANMBK52
340100101B DBM13W3POL3NMB	DBM13W3POL3NMBK52	340100101B DEM5W1P1A7NNMB	DEM5W1P1A7NNMBK52	340100101B DDM24W7SF179ANMB	DDM24W7SF179ANMBK52

Dimensions are shown in mm (inch)
Dimensions subject to change

ESA/SCC Cross Reference

ESA–SCC Part Number	ITT Cannon Part Number	ESA–SCC Part Number	ITT Cannon Part Number	ESA–SCC Part Number	ITT Cannon Part Number
340100101B	DDM36W4SF179ANMB	340100101B	DAM15S1A9NNMB	340100415B	DM115740-13
340100101B	DDM43W2SF179ANMB	340100101B	DBM25S1A9NNMB	340100419B	DM115740-12
340100101B	DDM47W1SF179ANMB	340100101B	DCM37S1A9NNMB	340100412B	DM115742-15
340100101B	DEM5W1PF179ANMB	340100101B	DDM50S1A9NNMB	340100416B	DM115742-14
340100101B	DAM7W2PF179ANMB	340100101B	DEM9P1A9NNMB	340100420B	DM115742-13
340100101B	DAM11W1PF179ANMB	340100101B	DAM15P1A9NNMB	340100413B	DM115741-7
340100101B	DBM9W4PF179ANMB	340100101B	DBM25P1A9NNMB	340100417B	DM115741-8
340100101B	DBM13W3PF179ANMB	340100101B	DCM37P1A9NNMB	340100414B	DM115743-20
340100101B	DBM17W2PF179ANMB	340100101B	DDM50P1A9NNMB	340100418B	DM115743-22
340100101B	DBM21W1PF179ANMB	340100101B	DEM9SF179ANMB	340102207B	DE-59-20
340100101B	DCM13W6PF179ANMB	340100101B	DAM15SF179ANMB	340102208B	DE-60-20
340100101B	DCM17W5PF179ANMB	340100101B	DBM25SF179ANMB	340102209B	DA-59-20
340100101B	DCM21WA4PF179ANMB	340100101B	DCM37SF179ANMB	340102210B	DA-60-20
340100101B	DCM25W3PF179ANMB	340100101B	DDM50SF179ANMB	340102211B	DB-59-20
340100101B	DCM27W2PF179ANMB	340100101B	DEM9PF179ANMB	340102212B	DB-60-20
340100101B	DDM24W7PF179ANMB	340100101B	DAM15PF179ANMB	340102213B	DC-59-20
340100101B	DDM36W4PF179ANMB	340100101B	DBM25PF179ANMB	340102214B	DC-60-20
340100101B	DDM43W2PF179ANMB	340100101B	DCM37PF179ANMB	340102215B	DD-59-20
340100101B	DDM47W1PF179ANMB	340100101B	DDM50PF179ANMB	340102216B	DD-60-20
340100101B	DEM9SNMB	340100102B	DEMA9SNMB	340102201B	D20418-52
340100101B	DAM15SNMB	340100102B	DAMA15SNMB	340102206B	D115418-70
340100101B	DBM25SNMB	340100102B	DBMA25SNMB	340102258B	D20418-101
340100101B	DCM37SNMB	340100102B	DCMA37SNMB	340102202B	D20419-74
340100101B	DDM50SNMB	340100102B	DDMA50SNMB	340102203B	D20419-48
340100101B	DEM9PNMB	340100102B	DEMA9PNMB	340102204B	D20420-67
340100101B	DAM15PNMB	340100102B	DAMA15PNMB	340102205B	D20420-49
340100101B	DBM25PNMB	340100102B	DBMA25PNMB	340102244B	D20419-73
340100101B	DCM37PNMB	340100102B	DCMA37PNMB	340102245B	D20419-84
340100101B	DDM50PNMB	340100102B	DDMA50PNMB	340102246B	D20420-63
340100101B	DEM9SOL3NMB	340102217B	DA19678-174	340102247B	D20420-88
340100101B	DAM15SOL3NMB	340102218B	DB19678-175	340102225B	DA19678-167
340100101B	DBM25SOL3NMB	340102219B	DC19678-173	340102226B	DB19678-168
340100101B	DCM37SOL3NMB	340102220B	DD19678-176	340102227B	DC19678-138
340100101B	DDM50SOL3NMB	340102221B	DA19678-157	340102228B	DD19678-161
340100101B	DEM9POL3NMB	340102222B	DB19678-171	340102239B	DE19977-47
340100101B	DAM15POL3NMB	340102223B	DC19678-162	340102240B	DA19977-40
340100101B	DBM25POL3NMB	340102224B	DD19678-172	340102241B	DB19977-43
340100101B	DCM37POL3NMB	340104001B	DM115224-1040A	340102242B	DC19977-45
340100101B	DDM50POL3NMB	340104003B	DM115224-1020A	340102243B	DD19977-44
340100101B	DEM9S1A0NNMB	340104005B	DM115224-1010A	340102234B	DE24657-16
340100101B	DAM15S1A0NNMB	340104002B	DM115224-2040A	340102235B	DA24658-15
340100101B	DBM25S1A0NNMB	340104004B	DM115224-2020A	340102236B	DB24659-15
340100101B	DCM37S1A0NNMB	340104006B	DM115224-2010A	340102237B	DC24660-16
340100101B	DDM50S1A0NNMB	340104007B	DM115224-3040A	340102238B	DD24661-13
340100101B	DEM9P1A0NNMB	340104008B	DM115224-4040A	340102229B	DE115386-101A
340100101B	DAM15P1A0NNMB	340104009B	DM115224-3020A	340102230B	DA115386-104A
340100101B	DBM25P1A0NNMB	340104010B	DM115224-4020A	340102231B	DB115386-102A
340100101B	DCM37P1A0NNMB	340104011B	DM115224-3010A	340102232B	DC115386-100A
340100101B	DDM50P1A0NNMB	340104012B	DM115224-4010A	340102233B	DD115386-103A
340100101B	DEM9S1A7NNMB	340100401B	DM115740-5036	340100501B	030-8882-002
340100101B	DAM15S1A7NNMB	340100405B	DM115740-5046	340100502B	031-8944-000
340100101B	DBM25S1A7NNMB	340100409B	DM115740-5047	340100503B	030-8848-020
340100101B	DCM37S1A7NNMB	340100402B	DM115742-5028	340100504B	031-8787-020
340100101B	DDM50S1A7NNMB	340100406B	DM115742-5039	340100505B	330-8782-001
340100101B	DEM9P1A7NNMB	340100410B	DM115742-5075	340100506B	031-8843-001
340100101B	DAM15P1A7NNMB	340100403B	DM115741-5048	340100507B	330-8944-000
340100101B	DBM25P1A7NNMB	340100407B	DM115741-5032	340100508B	031-8902-000
340100101B	DCM37P1A7NNMB	340100404B	DM115743-5064		
340100101B	DDM50P1A7NNMB	340100408B	DM115743-5040		
340100101B	DEM9S1A9NNMB	340100411B	DM115740-19		

Selection Guide

		Locking Hardware					
Backshell	Style	Female Screw Lock see page 209	Male Screw Lock see page 208	Sliding Lock Retainer Assembly see page 210	Slide Lock Post see page 211	Spring Latch Plate see page 212	Spring Latch see page 212
EMI Shielded	Snap-Together Metalized Plastic Straight Exit see page 200	—	—	—	—	—	—
EMI Shielded	Snap-Together Metalized Plastic 40° Exit see page 200	—	—	—	—	—	—
EMI Shielded	Die Cast Zinc Metal see page 202	—	▲	—	—	—	—
Metal	Deep Straight Clamp see page 203	●	●	●	●	●	●
Metal	Round Cable Clamp see page 203	●	●	●	●	●	●
Metal	Short Straight Clamp see page 204	●	●	●	●	●	●
Metal	90° Entry see page 204	●	●	●	●	●	●
Plastic	Snap-Together Universal see page 205	●	●	—	—	—	—
Plastic	One-Piece Snap-Together see page 205	—	▲	—	—	—	—
Plastic	One-Piece Plastic Straight Exit see page 206	—	—	●	●	●	●
Plastic	One-Piece Plastic 90° Exit see page 206	—	—	●	●	●	●
Plastic	Dataphone see page 206	—	▲	—	—	—	—
Plastic	Quick Disconnect for IDC Cable see page 207	—	—	—	—	—	—
Plastic	Quick Disconnect for Round Cable — Straight and 90° Exit see page 207	—	—	—	—	—	—

▲ Supplied with backshell
● Optional, compatible locking hardware
— Not compatible

Dimensions are shown in mm (inch)
Dimensions subject to change

Selection Guide

Locking Hardware							
Locking Hook see page 207	Locking Spring see page 207	Jackscrew Assembly see page 213	Jackpost Assembly see page 213	Recessed Jackscrew see page 201	Extended Jackscrew see page 201	Thumbscrew see page 201	Jackpost for In-Line Connections see page 201
—	—	—	—	•	•	•	•
—	—	—	—	•	•	•	•
—	—	—	—	—	—	—	—
—	—	—	•	—	—	—	—
—	—	—	•	—	—	—	—
—	—	—	•	—	—	—	—
—	—	—	—	—	—	—	—
—	—	•	—	—	—	—	—
—	—	—	—	—	—	—	—
—	—	—	—	—	—	—	—
—	—	—	—	—	—	—	—
—	—	—	—	—	—	—	—
—	—	—	—	—	—	—	—
•	•	—	—	—	—	—	—
•	•	—	—	—	—	—	—

Snap-Together Metalized Plastic

Metalized plastic backshells reduce EMI/RFI emissions.
Metalized plastic provides a light weight solution.
Design includes integral strain relieving cable clamp.

Product Features
- Improves conformance to FCC DOC #20780 shielding requirements
- No crimp ferrule tooling needed
- Quick and simple assembly using snap-together design feature

Attenuation

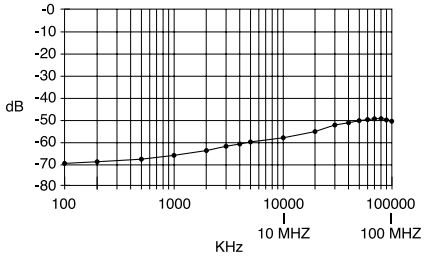

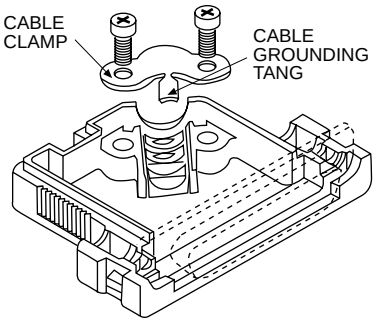

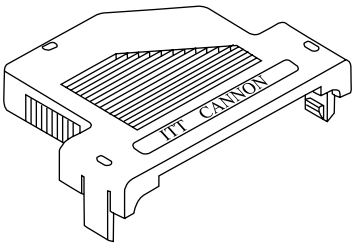

Note: Cable grounding tang not available on DE size backshell.

Specifications	
Attenuation:	−49dB @ 100 MHz
Temperature Range:	−20° C to 80° C

Materials and Finishes	
Material:	Thermoplastic, UL 94V-0 rated
Finish:	Nickel over Copper

Straight Exit

Kit consists of 1 front shell, 1 rear shell, 1 cable clamp, 2 screws
Optional locking hardware sold separately, see page 201.

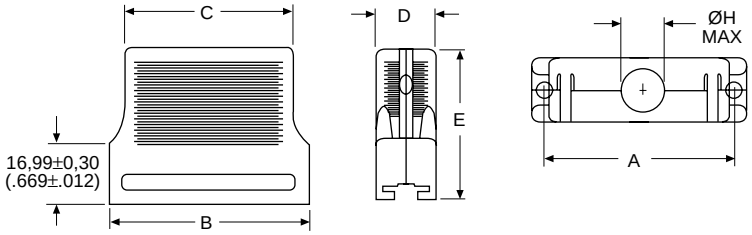

Shell Size	Layout	Part Number	A ±0,15 (.006)	B ±0,30 (.012)	C ±0,30 (.012)	D ±0,30 (.120)	E ±0,20 (.008)	Ø H Max.
DE	9	DE121073-154	24,95 (.982)	30,81 (1.213)	23,70 (.933)	16,00 (.630)	35,99 (1.417)	7,32 (.288)
DA	15	DA121073-150	33,30 (1.311)	39,09 (1.539)	31,80 (1.252)	16,00 (.630)	42,00 (1.654)	8,31 (.327)
DB	25	DB121073-151	47,00 (1.850)	53,01 (2.087)	45,01 (1.772)	16,00 (.630)	42,00 (1.654)	10,52 (.414)
DC	37	DC121073-152	63,45 (2.498)	69,29 (2.728)	60,30 (2.374)	16,00 (.630)	42,00 (1.654)	12,32 (.485)
DD	50	DD121073-153	61,10 (2.410)	66,90 (2.634)	58,30 (2.295)	19,00 (.748)	42,00 (1.654)	13,00 (.512)

40° Exit

Kit consists of 1 front shell, 1 rear shell, 1 cable clamp, 2 screws
Optional locking hardware sold separately, see page 201.

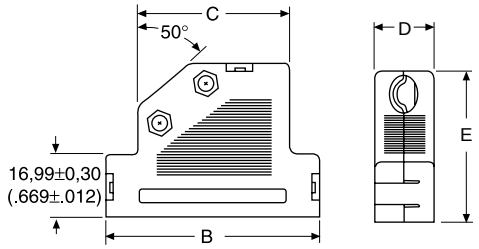

Shell Size	Layout	Part Number	B ±0,30 (.012)	C ±0,30 (.012)	D ±0,30 (.012)	E ±0,20 (.008)	Cable Diameter Min.	Cable Diameter Max.
DE	9	DE121073-54	35,99 (1.417)	22,00 (.866)	16,00 (.630)	35,99 (1.417)	3,51 (.138)	7,49 (.295)
DA	15	DA121073-50	44,29 (1.744)	27,31 (1.075)	16,00 (.630)	42,01 (1.654)	6,50 (.256)	8,99 (.354)
DB	25	DB121073-51	57,99 (2.283)	41,00 (1.614)	16,00 (.630)	42,01 (1.654)	6,50 (.256)	11,00 (.433)
DC	37	DC121073-52	74,50 (2.933)	57,51 (2.264)	16,00 (.630)	42,01 (1.654)	6,50 (.256)	11,00 (.433)
DD	50	DD121073-53	72,97 (2.873)	54,99 (2.165)	19,00 (.748)	42,01 (1.654)	8,99 (.354)	13,00 (.512)

Dimensions are shown in mm (inch)
Dimensions subject to change

Locking Hardware for Snap-Together EMI Shielded Backshell

Recessed Jackscrew

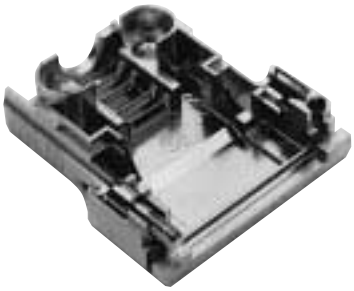

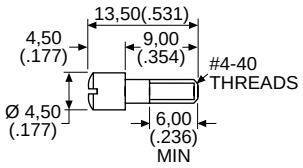

Part Number:	250-8501-004
Material:	Brass
Finish:	Nickel
Quantity Required per Connector:	2

Extended Jackscrew

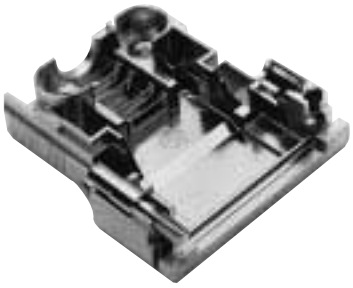

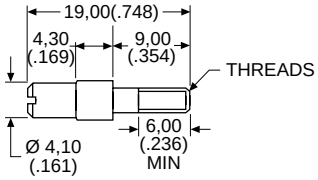

Part Number:	250-8501-009 (M3) 250-8501-010 (#4-40)
Material:	Brass
Finish:	Nickel
Quantity Required per Connector:	2

Thumbscrew

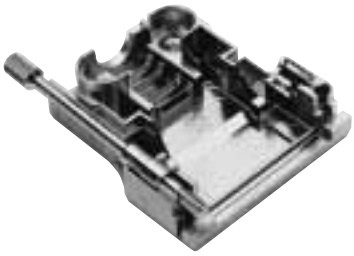

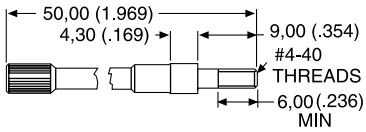

Part Number:	250-8501-013
Material:	Brass
Finish:	Nickel
Quantity Required per Connector:	2

Jackpost for In-Line Connections

Rectangular Nut

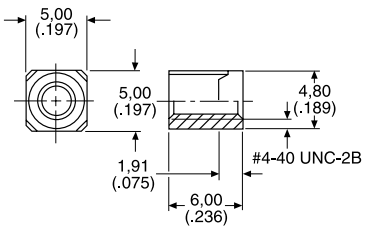

Jackpost

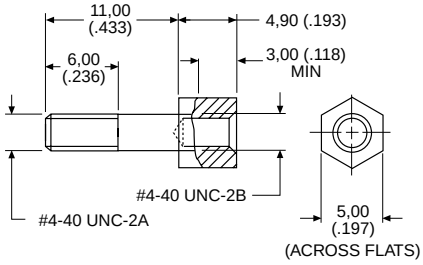

Jackpost Assembly

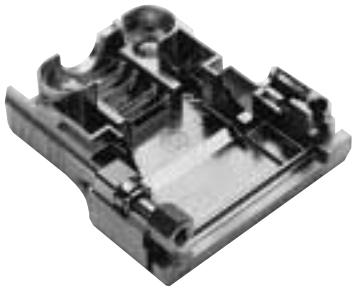

Assembly consists of 1 rectangular nut, 1 jackpost, 1 #4-40 lock washer.

Part Number:	D121073-19
Material:	Brass
Finish:	Nickel
Quantity Required per Connector:	2

Die Cast Zinc Metal Backshell

Straight Exit

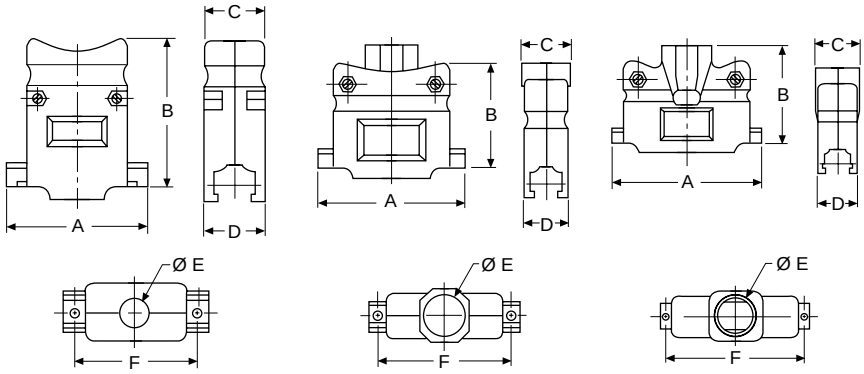

Die cast metal backshells reduce EMI/RFI emissions.
Die cast metal backshells offer improved shielding in a rugged package.

Product Features
- Improves conformance to FCC DOC #20780 shielding requirements
- No crimp ferrule tooling needed
- Kit consists of 1 front shell, 1 rear shell, 2 screws, 2 hex nuts, 2 mounting screws, 2 end brackets, 1 set of compression inserts (see this page)

Shell Size	Layout	Part Number	A ±0,13 (.005)	B ±0,13 (.005)	C ±0,13 (.005)	D ±0,13 (.005)	Ø E ±0,13 (.005)	F ±0,13 (.005)
DE	9	980-2000-345	31,12 (1.225)	37,21 (1.465)	15,75 (.620)	15,75 (.620)	10,16 (.400)	24,99 (.984)
DA	15	980-2000-346	39,12 (1.540)	40,64 (1.600)	15,75 (.620)	15,75 (.620)	10,16 (.400)	33,32 (1.312)
DB	25	980-2000-347	53,09 (2.090)	39,37 (1.550)	17,53 (.690)	15,75 (.620)	13,34 (.525)	47,17 (1.857)
DC	37	980-2000-348	69,34 (2.730)	45,72 (1.800)	21,95 (.864)	15,75 (.620)	18,44 (.726)	63,50 (2.500)
DD	50	980-2000-349	66,70 (2.626)	45,72 (1.800)	21,95 (.864)	18,54 (.730)	18,44 (.726)	61,11 (2.406)

Specifications

Attenuation:	–50 dB @ 1000 MHz
Temperature Range:	–20° C to 80° C

Materials and Finishes

Backshell Material:	Zinc
Backshell Finish:	Clear Zinc
Compression Inserts:	PVC
Hardware Material:	Steel
Hardware Finish:	Clear Zinc

Attenuation

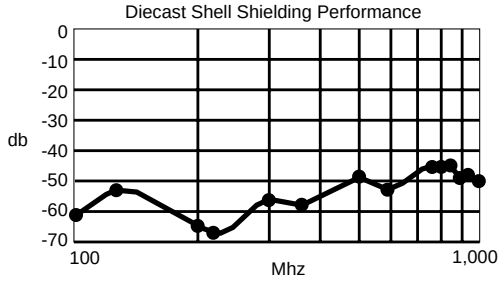

Compression Inserts (Included With Die Cast Zinc Metal Backshell)

Compression inserts accommodate a wide variety of cable sizes.

Position	Cable Diameter
9, 15	.190/.350
25	.190/.460
37, 50	.300/.680

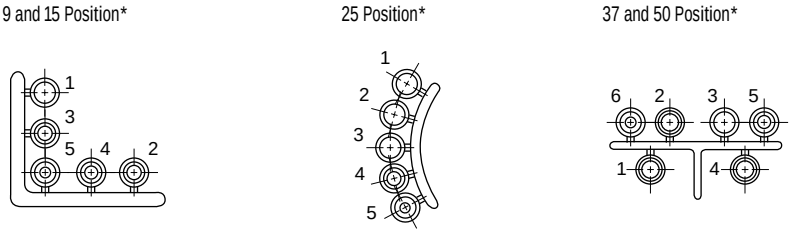

* Inserts may be supplied mirror image

Position	#1 O.D.	#1 I.D.	#2 O.D.	#2 I.D.	#3 O.D.	#3 I.D.	#4 O.D.	#4 I.D.	#5 O.D.	#5 I.D.	#6 O.D.	#6 I.D.
9, 15	12,07 (.475)	8,13 (.320)	9,14 (.360)	8,00 (.315)	9,14 (.360)	6,48 (.255)	9,14 (.360)	7,24 (.285)	9,14 (.360)	5,33 (.210)	—	—
25	15,24 (.600)	11,43 (.450)	11,43 (.450)	10,41 (.410)	11,43 (.450)	9,40 (.370)	11,43 (.450)	7,62 (.300)	11,43 (.450)	5,84 (.230)	—	—
37, 50	16,64 (.655)	14,48 (.570)	17,78 (.700)	15,75 (.620)	20,57 (.810)	16,51 (.650)	16,64 (.655)	12,70 (.500)	16,64 (.655)	10,80 (.425)	16,64 (.655)	8,89 (.350)

Dimensions are shown in mm (inch)
Dimensions subject to change

Metal Backshell

Metal Backshells provide strain relief.
Various profiles available for different cable routing requirements.

Product Features
Qualified to MIL-Spec M85049

Materials and Finishes

Backshell Material:	Low Carbon Steel
Finish:	Yellow Chromate over Cadmium
Hardware Material:	Steel

Deep Straight Clamp

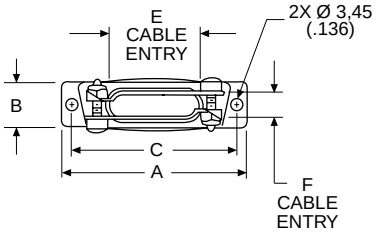

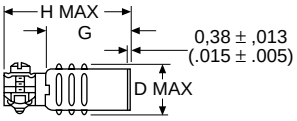

Kit consists of 1 shell, 2 cable clamps, 2 screws, 2 hex nuts

Shell Size	Layout	Part Number	Mil Spec Part Number	A ±0,38 (.015)	B ±0,572 (.0225)	C ±0,13 (.005)	D max.	E ±0,38 (.015)	F ±0,38 (.015)	G ±0,38 (.015)	H max.
DE	9	DE24657	M85049/48-1-1	30,56 (1.203)	12,484 (.4915)	24,99 (.984)	14,68 (.578)	9,53 (.375)	9,53 (.375)	19,05 (.750)	31,75 (1.250)
DA	15	DA24658	M85049/48-1-2	38,89 (1.531)	12,484 (.4915)	33,32 (1.312)	14,68 (.578)	18,11 (.713)	7,93 (.312)	19,05 (.750)	31,75 (1.250)
DB	25	DB24659	M85049/48-1-3	52,78 (2.078)	12,484 (.4915)	47,04 (1.852)	14,68 (.578)	25,40 (1.000)	7,93 (.312)	25,40 (1.000)	39,70 (1.563)
DC	37	DC24660	M85049/48-1-4	69,04 (2.718)	12,484 (.4915)	63,50 (2.500)	14,68 (.578)	34,93 (1.375)	7,93 (.312)	25,40 (1.000)	39,70 (1.563)
DD	50	DD24661	M85049/48-1-5	66,68 (2.625)	15,253 (.6005)	61,11 (2.406)	17,45 (.687)	35,71 (1.406)	10,31 (.406)	28,57 (1.125)	42,88 (1.688)

Round Cable Clamp

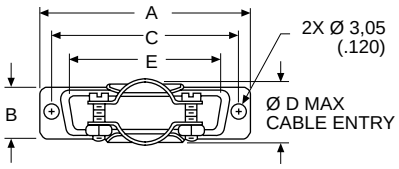

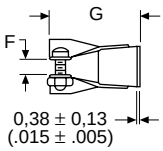

Kit consists of 1 shell, 2 screws, 2 hex nuts

Shell Size	Layout	Part Number	Mil Spec Part Number	A ±0,38 (.015)	B ±0,38 (.015)	C ±0,13 (.005)	Ø D max.	E ±0,38 (.015)	F ±0,38 (.015)	G ±0,76 (.030)
DE	9	DE44994	M85049/48-2-1	30,68 (1.208)	12,70 (.500)	24,99 (.984)	10,31 (.406)	16,79 (.661)	3,18 (.125)	26,18 (1.031)
DA	15	DA20961	M85049/48-2-2	38,89 (1.531)	12,70 (.500)	33,33 (1.312)	10,31 (.406)	24,99 (.984)	3,18 (.125)	26,18 (1.031)
DB	25	DB20962	M85049/48-2-3	52,78 (2.078)	12,70 (.500)	47,04 (1.852)	15,06 (.593)	38,48 (1.515)	4,75 (.187)	26,98 (1.062)
DC	37	DC20963	M85049/48-2-4	69,04 (2.718)	12,70 (.500)	63,50 (2.500)	18,23 (.718)	55,14 (2.171)	6,35 (.250)	26,98 (1.062)
DD	50	DD20964	M85049/48-2-5	66,68 (2.625)	15,47 (.609)	61,11 (2.406)	20,62 (.812)	53,16 (2.093)	7,92 (.312)	26,98 (1.062)

Short Straight Clamp

Kit consists of 1 shell, 2 or 3 screws, 2 or 3 hex nuts

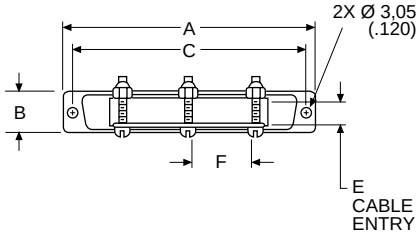

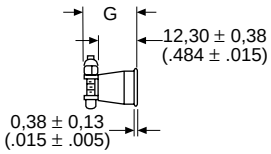

Shell Size	Layout	Part Number	Mil Spec Part Number	No. of Cable Locking Screws Included	A ±0,38 (.015)	B ±0,38 (.015)	C ±0,13 (.005)	E ±0,38 (.015)	F ±0,38 (.015)	G ±0,89 (.035)
DA	15	DA19678-1	M85049/48-3-2	2	38,88 (1.531)	12,70 (.500)	33,33 (1.312)	7,51 (.296)	7,93 (.312)	16,36 (.644)
DB	25	DB19678-2	M85049/48-3-3	2	52,78 (2.078)	12,70 (.500)	47,04 (1.852)	7,51 (.296)	20,22 (.796)	16,36 (.644)
DC	37	DC19678-3	M85049/48-3-4	3	69,04 (2.718)	12,70 (.500)	63,50 (2.500)	7,51 (.296)	17,45 (.687)	16,36 (.644)
DD	50	DD19678-4	M85049/48-3-5	3	66,68 (2.625)	15,47 (.609)	61,11 (2.406)	9,91 (.390)	17,45 (.687)	17,63 (.694)

DE-9 is not available.

90° Entry

Kit consists of 1 shell, 1 cable clamp, 1 screw, 1 nut, 2 rivnuts (assembled)

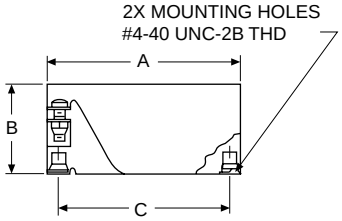

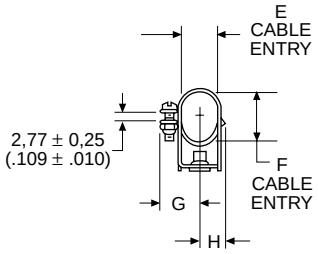

Shell Size	Layout	Part Number	Mil Spec Part Number	A ±0,38 (.015)	B ±0,76 (.030)	C ±0,13 (.005)	E ±0,76 (.030)	F ±0,76 (.030)	G ±0,76 (.030)	H ±0,76 (.030)
DE	9	DE19977-5	M85049/50-1	30,56 (1.203)	18,24 (.718)	24,99 (.984)	11,10 (.437)	11,10 (.437)	11,89 (.468)	7,14 (.281)
DA	15	DA19977-1	M85049/50-2	38,89 (1.531)	18,24 (.718)	33,33 (1.312)	11,10 (.437)	11,10 (.437)	11,89 (.468)	7,14 (.281)
DB	25	DB19977-2	M85049/50-3	52,78 (2.078)	24,58 (.968)	47,04 (1.852)	11,10 (.437)	15,88 (.625)	11,89 (.468)	7,14 (.281)
DC	37	DC19977-3	M85049/50-4	69,04 (2.718)	30,15 (1.187)	63,50 (2.500)	11,10 (.437)	20,63 (.812)	11,89 (.468)	7,14 (.281)
DD	50	DD19977-4	M85049/50-5	66,68 (2.625)	31,75 (1.250)	61,11 (2.406)	14,28 (.562)	23,01 (.906)	13,49 (.531)	8,71 (.343)

Dimensions are shown in mm (inch)
Dimensions subject to change

Plastic Backshell

Snap-Together Universal

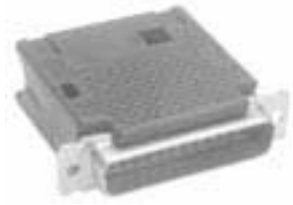

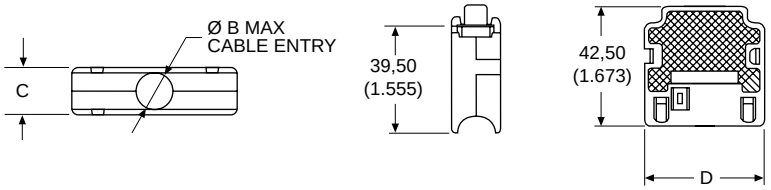

A 2-piece snap-together design for quick assembly
Customer furnishes tie-wrap

Materials and Finishes

Material:	Black Thermoplastic, UL 94V-0 rated

Shell Size	Layout	Part Number	Ø B max.	C ±0,20 (.008)	D ±0,20 (.008)
DE	9	DE115339-20	7,01 (.276)	17,00 (.669)	19,51 (.768)
DA	15	DA115339-21	9,60 (.378)	17,00 (.669)	27,79 (1.094)
DB	25	DB115339-22	11,61 (.457)	17,00 (.669)	41,61 (1.638)
DC	37	DC115339-23	13,00 (.512)	17,00 (.669)	57,99 (2.283)
DD	50	DD115339-24	16,00 (.630)	19,81 (.780)	52,32 (2.060)

One-Piece Snap-Together

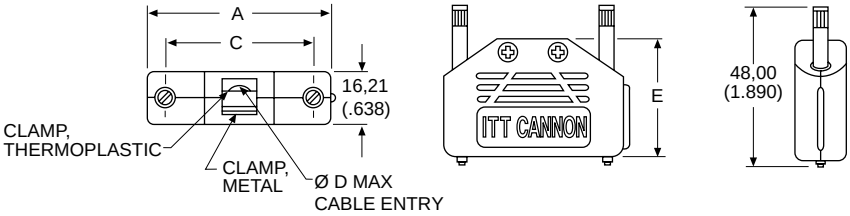

Low cost
Easy to assemble
Mounting hardware included
2 thumbscrews, 2 cable clamps

Materials and Finishes

Backshell Material:	Polypropylene
Hardware Material:	Steel
Hardware Finish:	Yellow chromate over zinc

Shell Size	Layout	Part Number	A	C	Ø D max.	E
DE	9	DEBS-9	35,20 (1.386)	24,99 (.984)	5,69 (.224)	27,51 (1.083)
DA	15	DABS-15	43,31 (1.705)	33,33 (1.312)	5,69 (.224)	31,19 (1.228)
DB	25	DBBS-25	57,20 (2.252)	47,04 (1.852)	6,50 (.256)	38,30 (1.508)

DC-37 and DD-50 are not available.

One-Piece Plastic

Straight Exit

Kit consists of 1 shell, 1 cable clamp,
1 set screw
Mounting hardware included
2 screws #4-24 x 5/16 long self-tapping
Accommodates spring latches

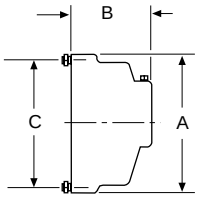

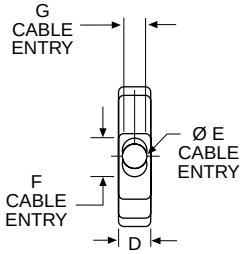

Materials and Finishes

Backshell Material:	Black Thermoplastic, UL 94V-2 rated
Hardware Material:	Steel
Hardware Finish:	Yellow Chromate over Cadmium or Zinc

Shell Size	Layout	Part Number	A ±0,38 (.015)	B ±0,38 (.015)	C ±0,13 (.005)	D ±0,38 (.015)	Ø E ±0,25 (.010)	F ±0,25 (.010)	G ±0,25 (.010)
DE	9	DE51218	30,94 (1.218)	25,40 (1.000)	24,99 (.984)	12,70 (.500)	7,14 (.281)	—	—
DA	15	DA51210	39,27 (1.546)	25,40 (1.000)	33,33 (1.312)	12,70 (.500)	9,14 (.360)	—	—
DB	25	DB51212	53,16 (2.093)	31,75 (1.250)	47,04 (1.852)	12,70 (.500)	—	12,52 (.493)	9,15 (.360)
DC	37	DC51214	69,44 (2.734)	38,10 (1.500)	63,50 (2.500)	12,70 (.500)	—	17,63 (.694)	9,15 (.360)
DD	50	DD51216	67,06 (2.640)	38,10 (1.500)	61,11 (2.406)	15,47 (.609)	—	18,64 (.734)	11,89 (.468)

90° Exit

Kit consists of 1 shell, 1 cable clamp,
1 set screw
Mounting hardware included
2 screws #4-24 x 5/16 long self-tapping

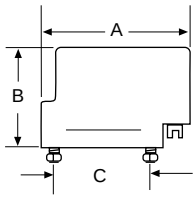

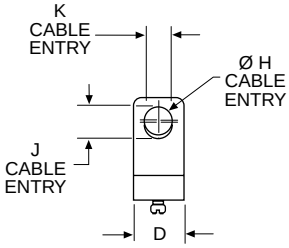

Materials and Finishes

Backshell Material:	Black Thermoplastic, UL 94V-2 rated
Hardware Material:	Steel
Hardware Finish:	Yellow Chromate over Cadmium or Zinc

Shell Size	Layout	Part Number	A ±0,38 (.015)	B ±0,38 (.015)	C ±0,13 (.005)	D ±0,38 (.015)	Ø H ±0,25 (.010)	J ±0,25 (.010)	K ±0,25 (.010)
DE	9	DE51219	37,95 (1.494)	25,40 (1.000)	24,99 (.984)	12,70 (.500)	7,14 (.281)	—	—
DA	15	DA51211	46,28 (1.822)	25,40 (1.000)	33,33 (1.312)	12,70 (.500)	9,14 (.360)	—	—
DB	25	DB51213	60,15 (2.368)	31,75 (1.250)	47,04 (1.852)	12,70 (.500)	—	12,52 (.493)	9,15 (.360)
DC	37	DC51215	76,43 (3.009)	38,10 (1.500)	63,50 (2.500)	12,70 (.500)	—	17,63 (.694)	9,15 (.360)
DD	50	DD51217	74,04 (2.915)	38,10 (1.500)	61,11 (2.406)	15,47 (.609)	—	18,64 (.734)	11,89 (.468)

Dataphone

Available in 25 position only
Mounting hardware included
2 screws #4-40 x 11/16 long

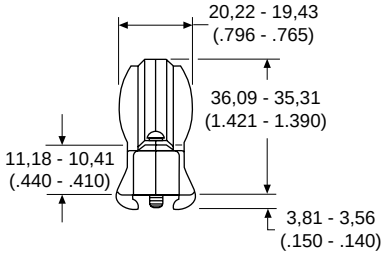

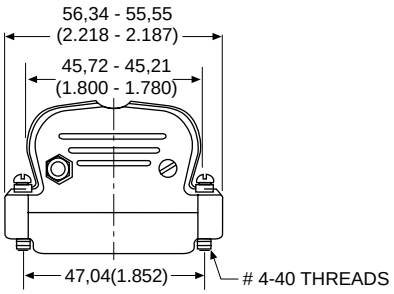

Materials and Finishes

Backshell Material:	Black Thermoplastic, UL 94V-0 rated
Hardware Material:	Steel
Hardware Finish:	Clear Chromate over Cadmium or Zinc

Shell Size	Layout	Part Number	Max. Cable Entry
DB	25	DB51226-1B	7,92 (.312)

ITT Cannon

Dimensions are shown in mm (inch)
Dimensions subject to change

Quick Disconnect for IDC Cable

IDC

Kit consists of 1 front shell, 1 rear shell, 2 strain reliefs, 5 screws

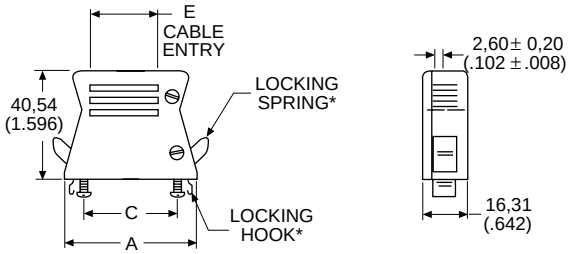

* Order optional locking hardware separately.

Materials and Finishes

Material:	Black Thermoplastic, UL 94V-0 rated

Shell Size	Layout	Part Number	A max.	C ±0,13 (.005)	E ±0,20 (.008)
DE	9	DE115386-1B	40,69 (1.602)	24,99 (.984)	14,99 (.590)
DA	15	DA115386-2B	49,00 (1.929)	33,30 (1.311)	23,29 (.917)
DB	25	DB115386-3B	62,69 (2.468)	47,04 (1.852)	36,98 (1.456)
DC	37	DC115386-4B	79,20 (3.118)	63,50 (2.500)	53,49 (2.106)

Quick Disconnect for Round Cable

Straight and 90° Exit

Kit consists of 1 front shell, 1 rear shell, 1 cable clamp, 1 spacer, 4 self-tapping screws, 2 machined screws

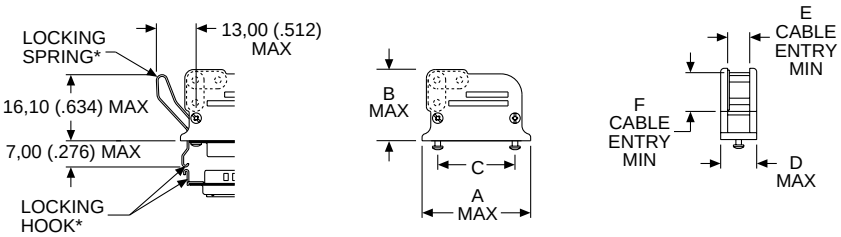

* Order optional locking hardware separately.

Materials and Finishes

Material:	Black Thermoplastic, UL 94V-0 rated

Shell Size	Layout	Part Number	A max.	B max.	C ±0,15 (.006)	D max.	E min.	F min.
DE	9	DE115339	41,33 (1.627)	32,41 (1.276)	25,00 (.984)	16,51 (.650)	7,70 (.303)	6,70 (.264)
DA	15	DA115339-1	49,63 (1.954)	32,41 (1.276)	33,30 (1.311)	16,51 (.650)	7,70 (.303)	6,70 (.264)
DB	25	DB115339-2	63,65 (2.506)	40,44 (1.592)	47,04 (1.852)	16,51 (.650)	7,70 (.303)	17,70 (.697)
DC	37	DC115339-3	79,86 (3.144)	42,42 (1.670)	63,50 (2.500)	16,51 (.650)	7,70 (.303)	17,70 (.697)
DD	50	DD115339-4	77,57 (3.054)	42,42 (1.670)	61,10 (2.406)	19,51 (.768)	10,69 (.421)	17,70 (.697)

Optional Locking Hardware/Mechanism

Optional hardware provides quick disconnect for either flat IDC cable or round jacketed cable.

Order 2 per connector

Material:	Corrosion-resistant steel

Locking Hook

Locking Spring

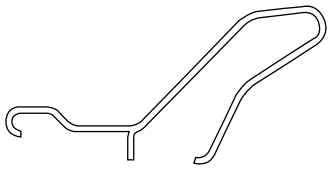

Lock Hook Part Number
015-8755-000
015-8755-001

Lock Spring Part Number
259-8760-000

NOTE: Not for use on rear panel mounted connectors.

Screw Lock Assemblies

ITT Cannon offers the largest variety of locking and latching hardware.
Refer to the accessories selection guide on pages 198-199 for use with ITT Cannon backshells.

Product Features
- Ensures positive mating
- Provides locking and latching for high vibration applications

Front Panel Mount

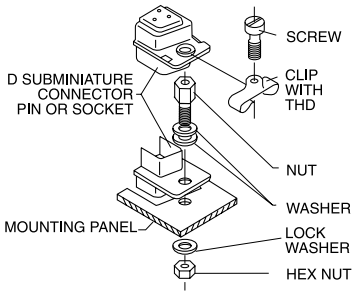

Rear Panel Mount

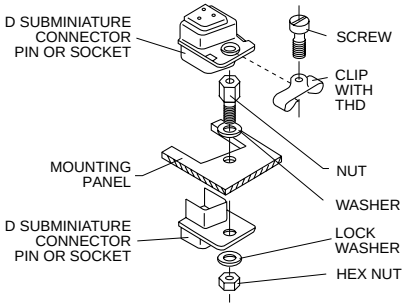

Male Screw Lock

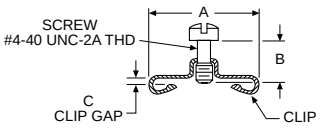

Kit consists of 1 screw and 1 clip
Order 2 per connector

Material:	Steel
Finish:	Yellow Chromate over Cadmium or Zinc

Shell Size	Part Number	A ±0,38 (.015)	B ±0,25 (.010)	C ±0,13 (.005)
DE, DA, DB, DC	D20419	14,10 (.555)	6,35 (.250)	1,22 (.048)
DE, DA, DB, DC	D20419-18	14,10 (.555)	7,14 (.281)	1,70 (.067)
DE, DA, DB, DC	D20419-21	14,10 (.555)	7,14 (.281)	2,34 (.092)
DE, DA, DB, DC	D20419-104	14,10 (.555)	7,92 (.312)	2,34 (.092)
DD	D20420	16,66 (.656)	6,35 (.250)	1,22 (.048)
DD	D20420-13	16,66 (.656)	7,14 (.281)	1,70 (.067)
DD	D20420-15	16,66 (.656)	7,14 (.281)	2,34 (.092)
DD	D20420-86	16,66 (.656)	7,92 (.312)	2,34 (.092)

Dimensions are shown in mm (inch)
Dimensions subject to change

Female Screw Lock

Kit consists of 1 nut, 3 washers, 1 lock washer, 1 hex nut
Order 2 per connector

Material:	Steel

Front Panel Mount

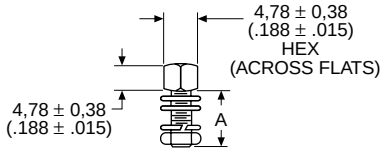

Rear Panel Mount

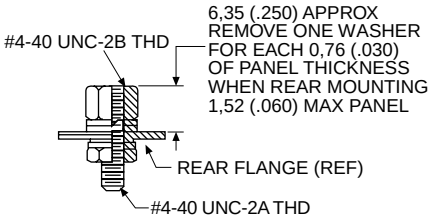

NOTE: (1) A 6 inch/pound (female) and 4 inch/pound (male) maximum torque during assembly is recommended on steel screw lock assemblies.
(2) A third flat washer is supplied for front panel mounting of tab shell connectors.

Yellow Chromate over Cadmium	Mil Spec Part Number	Zinc With Clear Chromate	A ±0,38 (.015)
D20418-2	M24308/26-1	D20418-80	7,92 (.312)
D20418-50	—	—	12,70 (.500)
D20418-39	M24308/26-2	—	15,88 (.625)
D20418-74	—	—	19,05 (.750)

Female Screw Lock for High Volume Applications

Order 2 per connector
Tool required for installation. See page 211.

Material:	Steel
Finish:	Zinc

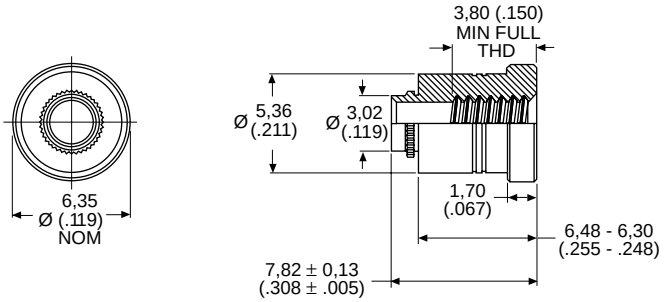

NOTE: Not suitable for rear panel mounting.

Part Number	Thread Code	Nominal Panel Thickness
980-2000-858	#4-40	1,09 – 0,91 (.043 – .036)
980-2000-859	M3	1,09 – 0,91 (.043 – .036)

Screw Locks for Connectors with Integral Threaded Inserts

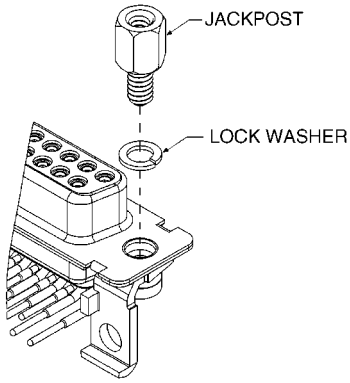

Kit consists of 1 jackpost, 1 lock washer
Order 2 per connector

Material:	Brass
Finish:	Nickel

Jackpost

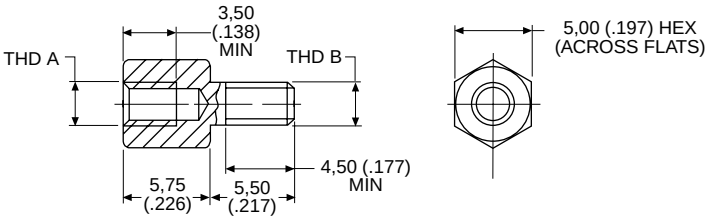

Part Number	Thread Code	
	THD A	THD B
D121073-39	#4-40 UNC-2B	#4-40 UNC-2A
D121073-40	M3	#4-40 UNC-2A
D121073-41	#4-40 UNC-2B	M3
D121073-42	M3	M3

Slide Lock Assemblies

ITT Cannon offers the largest variety of locking and latching hardware. Refer to the accessories selection guide on pages 198-199 for use with ITT Cannon backshells.

Product Features
- Ensures positive mating
- Provides locking and latching for high vibration applications

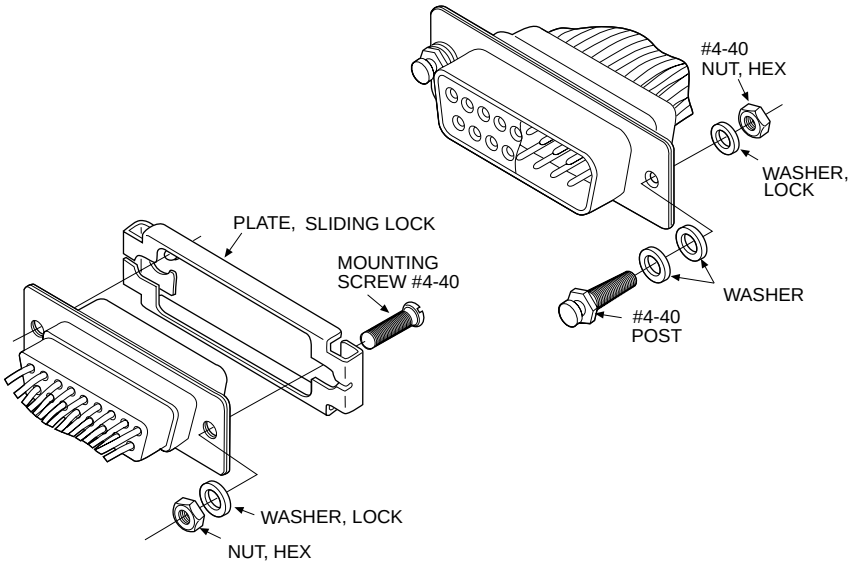

Sliding Lock Retainer Assembly

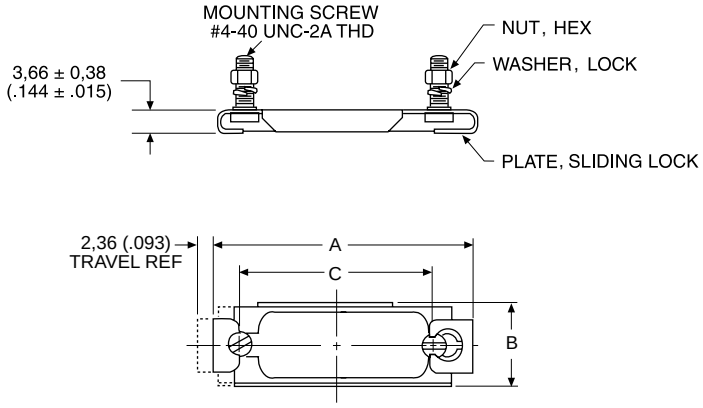

- Ideal for Ethernet Applications
- Kit consists of 1 sliding lock plate, 2 mounting screws, 2 lock washers, 2 hex nuts
- Order 1 kit per connector

Description	Material	Finish/ Treatment
Sliding Lock Plate	Stainless Steel	Passivated
Screw, Mounting	Steel	Yellow Chromate Over Cadmium or Zinc
Washer, Lock		
Nut, Hex		

Shell Size	Layout	Part Number	A ±0,38 (.015)	B ±0,38 (.015)	C ±0,13 (.005)
DE	9	DE51224-1	35,05 (1.380)	12,70 (.500)	25,00 (.984)
DA	15	DA51220-1*	43,70 (1.720)	12,70 (.500)	33,32 (1.312)
DB	25	DB51221-1	57,40 (2.260)	12,70 (.500)	47,04 (1.852)
DC	37	DC51222-1	73,86 (2.908)	12,70 (.500)	63,50 (2.500)
DD	50	DD51223-1	71,47 (2.814)	15,47 (.609)	61,11 (2.406)

* Meets IEEE 802.3 Ethernet Specification

Dimensions are shown in mm (inch)
Dimensions subject to change

Slide Lock Post Assemblies

Kit consists of 1 post, 2 washers, 1 lock washer, 1 hex nut
Order 2 kits per connector

Part Number:	D53018

Materials and Finishes

Material:	Steel
Finish:	Yellow Chromate over Cadmium or Zinc

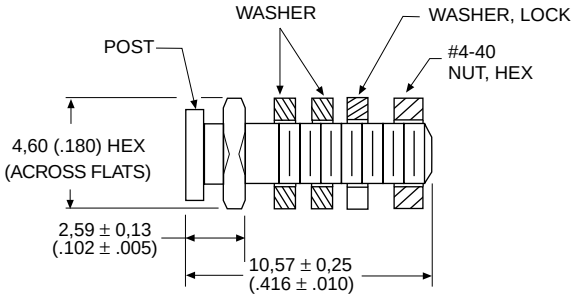

NOTE: When rear-mounting connector to a 1/16″ panel, delete the 2 washers.

Slide Lock Post for High Volume Applications

Order 2 per connector
Tool required for installation. See this page.

Part Number:	980-2000-860
Panel Thickness:	1,09-0,91 (.043-.036)

Materials and Finishes

Material:	Stainless Steel
Treatment:	Passivated

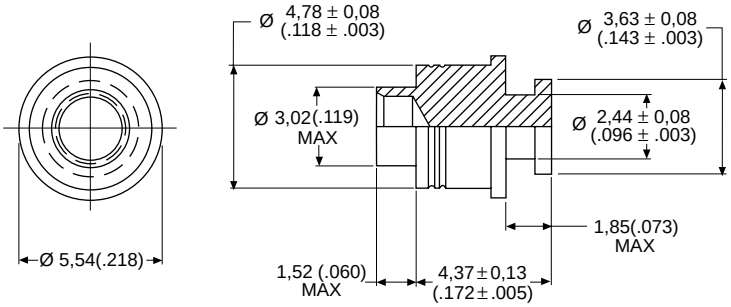

NOTE: Not suitable for rear panel mounting

Tool for High Volume Applications

Part Number:	995-2000-092

Spring Latch Assemblies

ITT Cannon offers the largest variety of locking and latching hardware. Refer to the accessories selection guide on pages 198-199 for use with ITT Cannon Connectors.

Product Features
- Low Cost
- Minimizes field connection time
- Positive lock between connectors
- Packaged 2 kits per bag

Materials and Finishes

Material:	Stainless Steel
Treatment:	Passivated

Unlocked

Locked

Spring Latch Plate Assembly

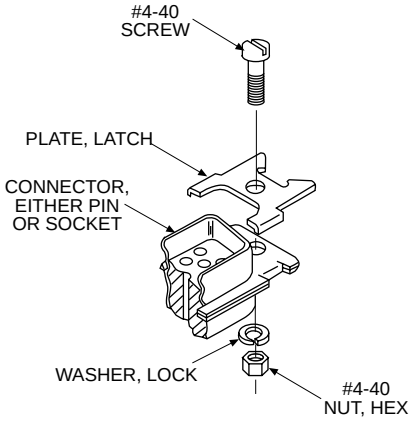

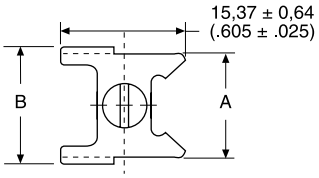

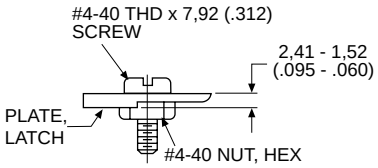

Shell Size	Layout	Part Number	A ±0,38 (.015)	B ±0,38 (.015)
DE, DA, DB, DC	9, 15, 25, 37	D110278	12,42 (.489)	14,35 (.565)
DD	50	D110280	15,47 (.609)	17,09 (.673)

Kit consists of 1 plate, 1 screw, 1 lock washer, 1 hex nut
Order 2 kits per connector

Spring Latch Assembly

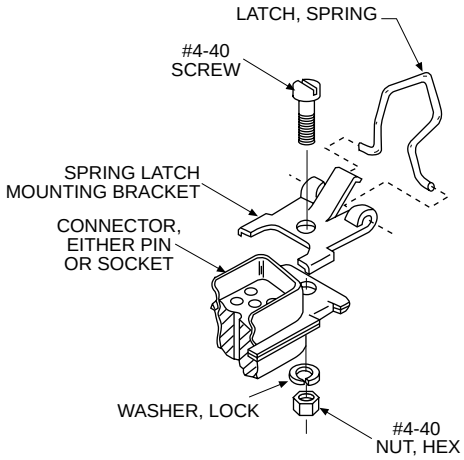

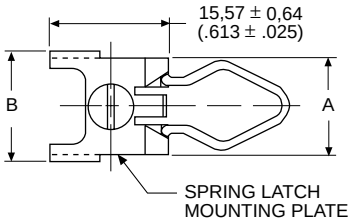

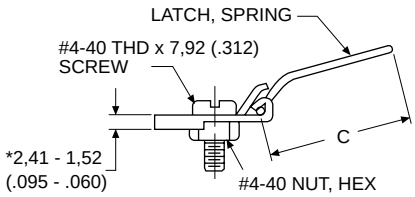

* Dimension does not apply to rear panel mounting.

Shell Size	Layout	Part Number	A ±0,38 (.015)	B ±0,38 (.015)	C ±0,51 (.020)
DE, DA, DB, DC	9, 15, 25, 37	D110277	12,42 (.489)	14,35 (.565)	18,59 (.732)
DD	50	D110279	15,49 (.609)	17,09 (.673)	18,59 (.732)

Kit consists of 1 spring, 1 screw, 1 bracket, 1 lock washer, 1 hex nut
Order 2 kits per connector
Front panel mounting

Dimensions are shown in mm (inch)
Dimensions subject to change

Jackscrew/Jackpost Assemblies

ITT Cannon offers the largest variety of locking and latching hardware. Refer to the accessories selection guide on pages 198-199 for use with ITT Cannon Connectors.

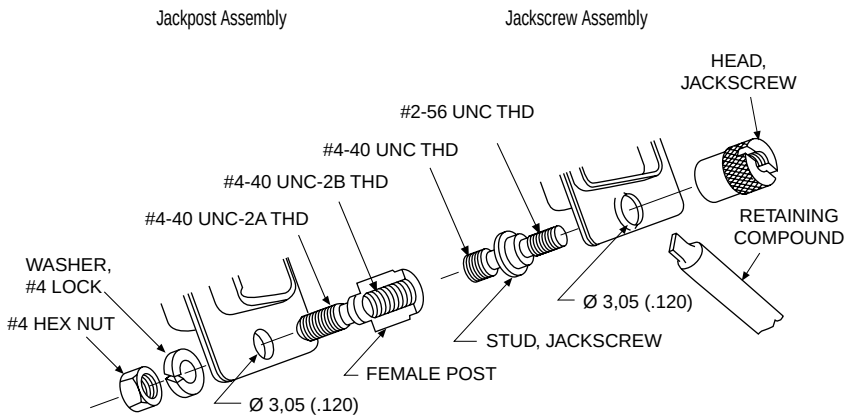

Jackscrew Assembly

Kit consists of 2 studs, 2 heads, 1 tube retaining compound
Order one kit per connector

Part Number:	D110550

Materials and Finishes

Material:	Stainless Steel

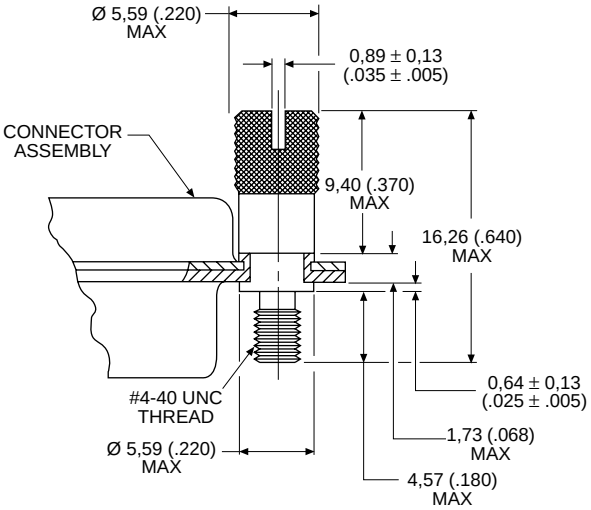

Jackpost Assembly

Kit consists of 2 posts, 2 hex nuts, 2 lock washers
Order one kit per connector

Part Number:	D110551

Materials and Finishes

Material:	Stainless Steel
Treatment:	Passivated

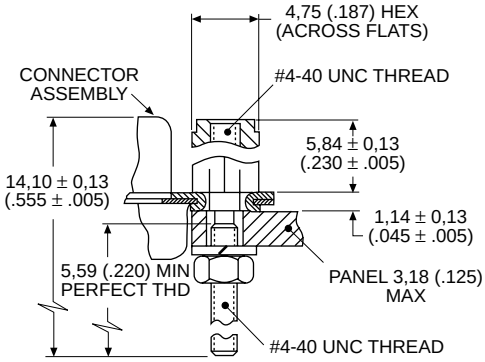

NOTE: Jackpost is not compatible with rear-panel mount connectors.

Guide Pin Plate

Female

Useful in blind mate applications.
Kit consists of 1 plate, 2 screws
Guide pin inserts for Size 8 cavities for Combo D® connectors also available. See page 95.

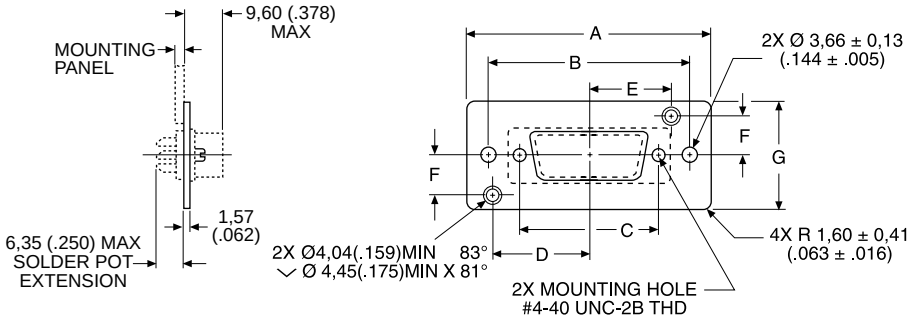

Plate and Hardware Material:	Steel
Plate and Hardware Finish:	Yellow Chromate over Zinc or Cadmium

Shell Size	Layout	Part Number	A ±0,41 (.016)	B ±0,13 (.005)	C ±0,13 (.005)	D ±0,13 (.005)	E ±0,13 (.005)	F ±0,13 (.005)	G ±0,41 (.016)	H ±0,41 (.016)	J ±0,41 (.016)	K ±0,41 (.016)
DE	9	DE111920	49,61 (1.953)	40,08 (1.578)	25,00 (.986)	18,65 (.734)	15,27 (.601)	9,52 (.375)	25,40 (1.000)	30,58 (1.204)	12,29 (.484)	6,15 (.242)
DA	15	DA22214	57,96 (2.282)	48,41 (1.906)	33,32 (1.312)	22,81 (.898)	19,43 (.765)	9,52 (.375)	25,40 (1.000)	38,91 (1.532)	12,29 (.484)	6,15 (.242)
DB	25	DB22254	71,63 (2.820)	62,13 (2.446)	47,04 (1.852)	29,67 (1.168)	26,29 (1.035)	9,52 (.375)	25,40 (1.000)	51,21 (2.016)	11,91 (.469)	5,94 (.234)
DC	37	DC22071	88,11 (3.469)	78,59 (3.094)	63,50 (2.500)	37,90 (1.492)	34,52 (1.359)	9,52 (.375)	25,40 (1.000)	67,49 (2.657)	11,91 (.469)	5,94 (.234)
DD	50	DD21961	85,72 (3.375)	76,20 (3.000)	61,11 (2.406)	36,50 (1.437)	33,32 (1.312)	11,10 (.437)	28,58 (1.125)	65,10 (2.563)	14,30 (.563)	7,16 (.282)

Recommended Panel Cutout

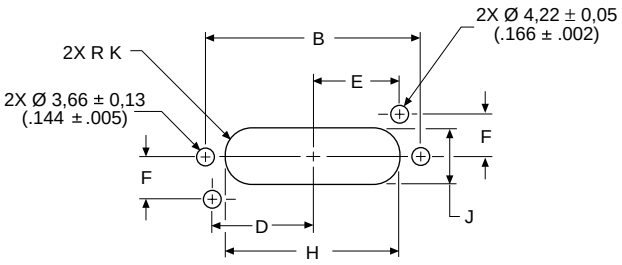

ITT Cannon

Dimensions are shown in mm (inch)
Dimensions subject to change

Guide Pin Plate

Male

Useful in blind mate applications.
Kit consists of 1 plate, 2 sems screws, 2 rivets, 2 guide pins, 2 washers
Guide pin inserts for Size 8 cavities for Combo D® connectors also available. See page 95.

Plate and Hardware Material:	Steel
Plate and Hardware Finish:	Yellow Chromate over Zinc or Cadmium
Guide Pin Material:	Stainless Steel

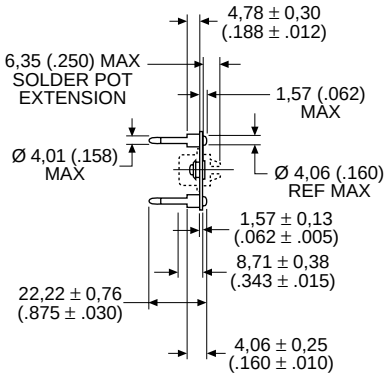

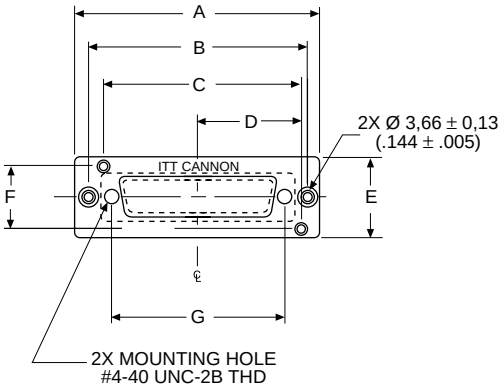

Shell Size	Layout	Part Number	A ±0,38 (.015)	B ±0,13 (.005)	C ±0.25 (.010)	D ±0,13 (.005)	E ±0,38 (.015)	F ±0,25 (.010)	G ±0.13 (.005)	H ±0.25 (.010)	J ±0.38 (.015)	K ±0,13 (.005)
DE	9	DE111919	49,61 (1.953)	40,08 (1.578)	33,91 (1.335)	18,65 (.734)	25,40 (1.000)	19,05 (.750)	25,00 (.984)	12,29 (.484)	30,58 (1.204)	6,15 (.242)
DA	16	DA22213	57,94 (2.281)	48,41 (1.906)	42,24 (1.663)	22,81 (.898)	25,40 (1.000)	19,05 (.750)	33,32 (1.312)	12,29 (.484)	38,89 (1.531)	6,15 (.242)
DB	25	DB22255	71,63 (2.820)	62,13 (2.446)	55,96 (2.203)	29,67 (1.168)	25,40 (1.000)	19,05 (.750)	47,04 (1.852)	12,29 (.484)	51,99 (2.047)	6,15 (.242)
DC	37	DC22070	88,09 (3.468)	78,42 (3.094)	72,42 (2.851)	37,90 (1.492)	25,40 (1.000)	19,05 (.750)	63,50 (2.500)	12,29 (.484)	68,25 (2.687)	6,15 (.242)
DD	50	DD21962	85,72 (3.375)	76,20 (3.000)	69,82 (2.749)	36,50 (1.437)	28,58 (1.125)	22,20 (.874)	61,11 (2.406)	15,06 (.593)	66,93 (2.635)	7,52 (.296)

Recommended Panel Cutout

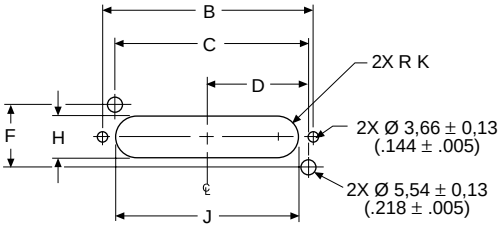

Connector Saver

Connector Saver

Connector Savers are used to minimize wear on cable or panel connectors.

Engaging Face, Pin Side

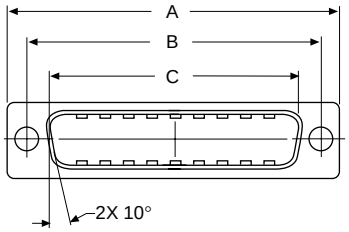

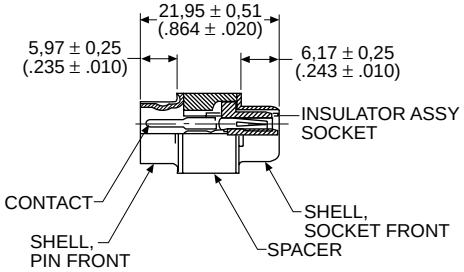

Note: Hardware removed for clarity.

Shell Size	Layout	Part Numbers	A ±0,40 (.015)	B ±0,25 (.010)	C ±0,25 (.010)
DE	9	DEBU111515	30,81 (1.213)	24,99 (.984)	16,92 (.666)
DA	15	DABU111512	39,14 (1.541)	33,32 (1.312)	25,25 (.994)
DB	25	DBBU111511	53,04 (2.088)	47,04 (1.852)	38,96 (1.534)

Note: DC-37 and DD-50 not available.

Specifications

Temperature: −55° C to 105° C
Current Rating: 7 A
Dielectric Withstanding Voltage: 500 VAC at Sea Level

Materials and Finishes

Description	Material	Finish
Shells	Steel	Tin/Lead
Insulator	Black Thermoplastic, UL 94V-0	—
Contacts	Copper Alloy	Gold Over Nickel
Spacer	Zinc Alloy	—
Locking Hardware	Steel	Clear Chromate Over Zinc

Dimensions are shown in mm (inch)
Dimensions subject to change

Gender Changer

Male/Male

Gender Changers modify the mating interface to allow connectors of the same genders to mate.

Product Features

- Low cost way to correct design errors
- Optional hardware allows design flexibility

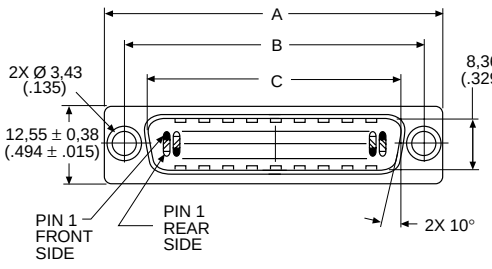

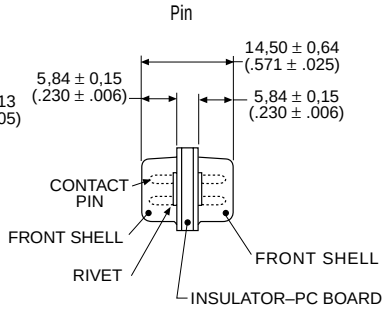

Note: Grounding dimples available on male/male only.

Shell Size	Layout	Part Number Without Hardware	Part Number With Hardware	A ±0,38 (.015)	B ±0,13 (.005)	C ±0,13 (.005)
DE	9	DE111805-1	DE111805-5	30,81 (1.213)	24,99 (.984)	16,92 (.666)
DA	15	DA111806-1	DA111806-5	39,14 (1.541)	33,32 (1.312)	25,25 (.994)
DB	25	DB111807-1	DB111807-5	53,04 (2.088)	47,04 (1.852)	38,96 (1.534)
DC	37	DC111808-1	DC111808-5	69,32 (2.729)	63,50 (2.500)	55,42 (2.182)

Note: DD-50 not available in male/male.

Female/Female

Gender Changers modify the mating interface to allow connectors of the same genders to mate.

Product Features

- Low cost way to correct design errors
- Optional hardware allows design flexibility

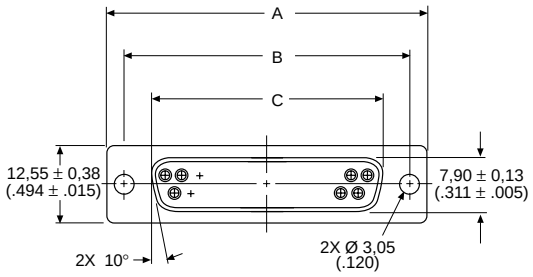

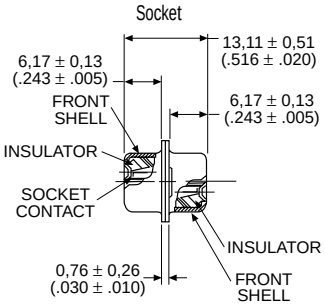

Shell Size	Layout	Part Number Without Hardware	Part Number With Hardware	A ±0,38 (.015)	B ±0,13 (.005)	C ±0,13 (.005)
DE	9	DE111813	DE111813-3	30,81 (1.213)	24,99 (.984)	16,33 (.643)
DA	15	DA111810	DA111810-3	39,14 (1.541)	33,32 (1.312)	24,66 (.971)
DB	25	DB111811	DB111811-2	53,04 (2.088)	47,04 (1.852)	38,38 (1.511)

Note: DC-37 and DD-50 not available for female/female.

Specifications

Temperature: −55° C to 105° C
Current Rating: 3 A
Dielectric Withstanding Voltage: 500 VAC at Sea Level

Materials and Finishes

Description		Material	Finish
Shells		Steel	Tin/Lead
Insulator	M/M	Glass Epoxy	—
	F/F	Black Thermoplastic, UL 94V-0	—
Contacts		Copper Alloy	Gold Over Nickel
Rivets (M/M)		Copper Alloy	Tin/Lead
Locking Hardware		Steel	Clear Chromate Over Cadmium or Zinc and Mylar

Dust Cap

Dust caps provide protection from moisture and dust for unused I/O ports.

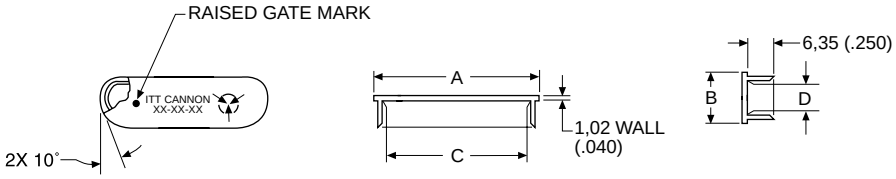

Product Features

Conductive Dust Caps provide a surface resistivity of at least 1 x 10^5 ohms/sq
Dust Caps meet the static decay test requirements of MIL-B-81705C, Type II.
Dust Caps have an integral flange for easy application and removal.

Materials and Finishes

Material:	Black Polyethylene

NOTE: C dim. applies at point of maximum integral interface length.

Part Number	I.D.	A	B	C	D
DE-59-20	Socket	20,32 (.800)	11,43 (.450)	16,36 (.644)	7,59 (.299)
DA-59-20	Socket	28,45 (1.120)	11,68 (.460)	24,59 (.968)	7,62 (.300)
DB-59-20	Socket	42,42 (1.670)	11,68 (.460)	38,25 (1.506)	7,49 (.295)
DC-59-20	Socket	58,93 (2.320)	11,68 (.460)	54,81 (2.158)	7,37 (.290)
DD-59-20	Socket	56,90 (2.240)	14,48 (.570)	53,11 (2.091)	10,41 (.410)
DE-60-20	Pin	21,84 (.860)	12,95 (.510)	17,78 (.700)	8,92 (.351)
DA-60-20	Pin	30,48 (1.200)	12,95 (.510)	26,52 (1.044)	9,02 (.355)
DB-60-20	Pin	44,20 (1.740)	13,46 (.530)	39,60 (1.559)	9,09 (.358)
DC-60-20	Pin	60,71 (2.390)	13,46 (.530)	56,90 (2.240)	9,37 (.369)
DD-60-20	Pin	58,17 (2.290)	16,00 (.630)	54,28 (2.137)	12,04 (.474)

Interfacial Seal

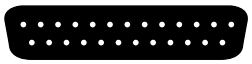

Interfacial seals provide moisture resistance at the mating interface.

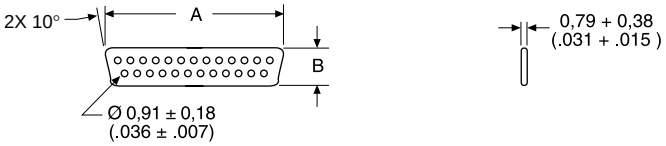

Product Features

Other Interfacial Seals in the Combo D® layouts are available upon request.

Materials and Finishes

Material:	Silastic Sheet

Shell Size	Layout	Part Number	A	B
DE	9	DE53750	16,66 (.656)	8,41 (.331)
DA	15	DA53750-1	24,99 (.984)	8,41 (.331)
DB	25	DB53750-2	38,88 (1.531)	8,41 (.331)
DC	37	DC53750-3	55,14 (2.171)	8,41 (.331)
DD	50	DD53750-4	52,78 (2.078)	11,10 (.437)
DC	21WA4	075-0354-003	55,14 (2.171)	8,41 (.331)

Potting Shell

Potting shells are molded with a thin flange 0,76 (.030) to permit the use of D Subminiature locking devices.
Potting shells hold epoxy in place during curing.

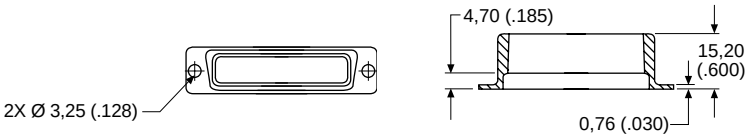

Materials and Finishes

Material:	Nylon
Color:	Natural (white)

Shell Size	Layout	Part Number
DE	9	DE50904-1
DA	15	DA50905-1
DB	25	DB50906-1
DC	37	DC50907-1
DD	50	DD50908-1

Dimensions are shown in mm (inch)
Dimensions subject to change

Selection Index Page

Reader's Resource

Dimensional Reference Data
- Panel Mounting . . . 220
- Panel Cutouts . . . 221

Contact Cavity Arrangements
- Combo D® — Plug . . . 222
- Combo D® — Receptacle . . . 223
- Standard — Plug and Receptacle . . . 224

Pushfit/Boardlock — Standard and European . . . 225

Alternate Technical Configurations
- 50 Ohm Coaxial Contact — Straight and 90° . . . 225
- Bracket — Standard and European . . . 226

Hardware Views
- Standard . . . 226
- European . . . 227

Printed Circuit Board (PCB) Hole Patterns
- Combination Layouts
  - Coaxial 90° — Standard
    - Plug . . . 228
    - Receptacle . . . 231
  - Coaxial 90° — European
    - Plug . . . 234
    - Receptacle . . . 236
  - Coaxial Straight — Standard/European
    - Plug . . . 238
    - Receptacle . . . 241
  - High Power 90° — Standard
    - Plug . . . 244
    - Receptacle . . . 247
  - High Power 90° — European
    - Plug . . . 250
    - Receptacle . . . 252
  - High Power/High Voltage Straight — Standard/European
    - Plug . . . 254
    - Receptacle . . . 257
  - 90° PC Tails (Size 20 Signal Contacts only) — European
    - Plug . . . 260
    - Receptacle . . . 263
  - Straight PC Tails (Size 20 Signal Contacts only) — Standard/European
    - Plug . . . 266
    - Receptacle . . . 269
- Standard Layouts
  - 90° Standard — Plug and Receptacle . . . 272
  - 90° European — Plug and Receptacle . . . 273
  - Straight PC Tails — Plug and Receptacle Standard/European . . . 274

Lease Tooling . . . 275

Glossary of Terms . . . 276

Obsolete Products/Available Products Not Previously Listed . . . 282

Part Number Index . . . 283

Product Safety and Warranty . . . 297

Dimensions are shown in mm (inch)
Dimensions subject to change

Panel Mounting

Figure 1A

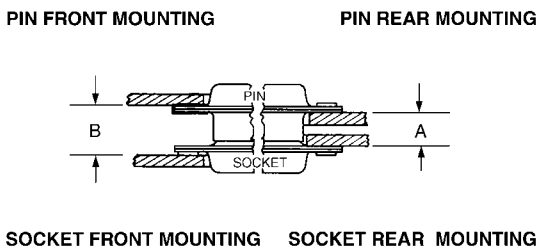

Figure 1B

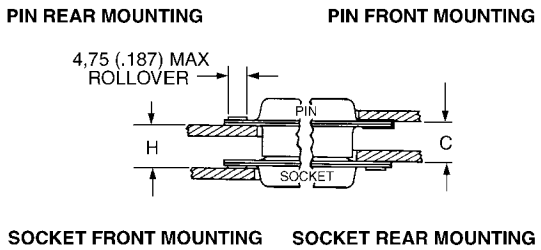

Figure 2

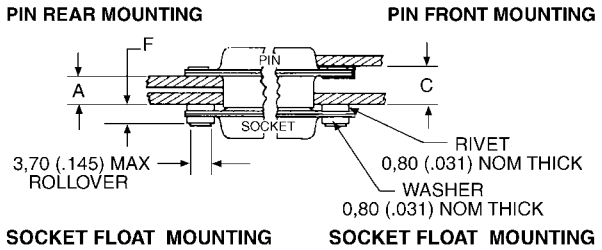

Figure 3

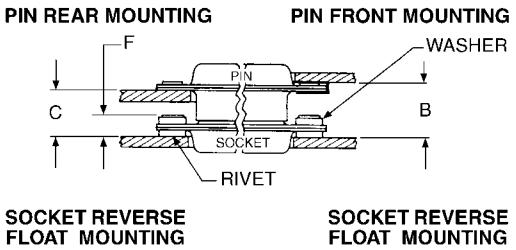

Figure Number	Combination of Mated Connectors Size	Pin (See Note Below)	Socket	A +0,76 (.030)	B +0,76 (.030)	C +0,76 (.030)	F ±0,25 (.010)	H +0,76 (.030)
1A, 1B	A, E	Standard	Standard	6,35 (.250)	8,63 (.340)	7,49 (.295)	—	7,49 (.295)
1A, 1B	B, C, D	Standard	Standard	6,04 (.238)	8,71 (.343)	7,56 (.298)	—	7,18 (.283)
2	A, E	Standard	Float Mount	5,53 (.218)	—	6,68 (.263)	3,04 (.120)	—
2	B, C, D	Standard	Float Mount	5,23 (.206)	—	6,75 (.266)	3,04 (.120)	—
2	A, E	Float Mount	Standard	5,53 (.218)	—	6,68 (.263)	3,04 (.120)	—
2	B, C, D	Float Mount	Standard	5,23 (.206)	—	6,37 (.251)	3,30 (.130)	—
3	A, E	Standard	Reverse Float Mount	—	9,09 (.358)	7,95 (.313)	3,04 (.120)	—
3	B, C, D	Standard	Reverse Float Mount	—	9,16 (.361)	7,64 (.301)	3,04 (.120)	—
3	A, E	Reverse Float Mount	Standard	—	9,09 (.358)	7,95 (.313)	3,04 (.120)	—
3	B, C, D	Reverse Float Mount	Standard	—	9,01 (.355)	7,87 (.310)	3,30 (.130)	—

Notes:
1. A, B, C and H are dimensions between panels and represent the recommended limit to be used in the design of the connector mounting method.
2. It is recommended that only one assembly, either pin or socket, be float mounted.
3. Standard pin assemblies contained 0,38 (.015) thick front shells on E and A sizes; 0,61 (.024) thick front shells on B, C, and D sizes.
4. Standard connectors accommodate a #4 screw. Float mount connectors accommodate a #2 screw.

Dimensions are shown in mm (inch)
Dimensions subject to change

Panel Cutouts

Standard Cutout

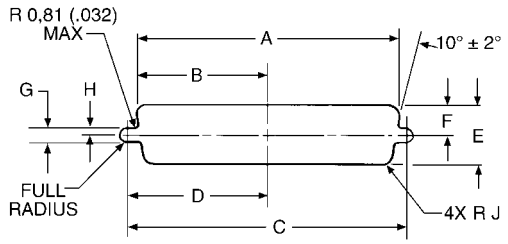

Rear Mounting Cutout (Optional)

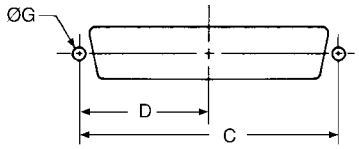

Front Panel Mounting

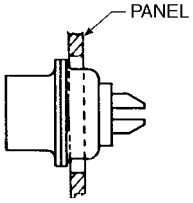

Standard Shell

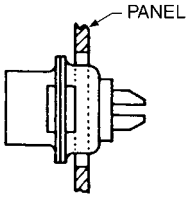

Dual Float Mount Shell

Rear Panel Mounting

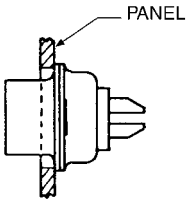

Standard Shell

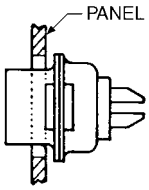

Dual Float Mount Shell

Standard Shell

Shell Size	Mounting Method	A ±0,13 (.005)	B ±0,13 (.005)	C ±0,13 (.005)	D ±0,13 (.005)	E ±0,13 (.005)	F ±0,13 (.005)	G ±0,05 (.002)	H ±0,05 (.002)	J ±0,05 (.002)
DE	Front	22,19 (.874)	11,09 (.437)	24,99 (.984)	12,49 (.492)	13,03 (.513)	6,52 (.257)	3,04 (.120)	1,52 (.060)	2,10 (.083)
	Rear	20,47 (.806)	10,23 (.403)	24,99 (.984)	12,49 (.492)	11,40 (.449)	5,71 (.225)	3,04 (.120)	1,52 (.060)	3,35 (.132)
DA	Front	30,53 (1.202)	15,26 (.601)	33,32 (1.312)	16,66 (.656)	13,03 (.513)	6,52 (.257)	3,04 (.120)	1,52 (.060)	2,10 (.083)
	Rear	28,80 (1.134)	14,40 (.567)	33,32 (1.312)	16,66 (.656)	11,40 (.449)	5,71 (.225)	3,04 (.120)	1,52 (.060)	3,35 (.132)
DB	Front	44,27 (1.743)	22,14 (.872)	47,04 (1.852)	23,52 (.926)	13,03 (.513)	6,52 (.257)	3,04 (.120)	1,52 (.060)	2,10 (.083)
	Rear	42,51 (1.674)	21,25 (.837)	47,04 (1.852)	23,52 (.926)	11,40 (.449)	5,71 (.225)	3,04 (.120)	1,52 (.060)	3,35 (.132)
DC	Front	60,73 (2.391)	30,37 (1.196)	63,50 (2.500)	31,75 (1.250)	13,03 (.513)	6,52 (.257)	3,04 (.120)	1,52 (.060)	2,10 (.083)
	Rear	59,08 (2.326)	29,54 (1.163)	63,50 (2.500)	31,75 (1.250)	11,40 (.449)	5,71 (.225)	3,04 (.120)	1,52 (.060)	3,35 (.132)
DD	Front	58,34 (2.297)	29,18 (1.149)	61,11 (2.406)	30,55 (1.203)	15,82 (.623)	7,92 (.312)	3,04 (.120)	1,52 (.060)	2,10 (.083)
	Rear	56,33 (2.218)	28,16 (1.109)	61,11 (2.406)	30,55 (1.203)	14,09 (.555)	7,06 (.278)	3,04 (.120)	1,52 (.060)	3,35 (.132)

Dual Float Mount Shell

Shell Size	Mounting Method	A ±0,13 (.005)	B ±0,13 (.005)	C ±0,13 (.005)	D ±0,13 (.005)	E ±0,13 (.005)	F ±0,13 (.005)	G ±0,05 (.002)	H ±0,05 (.002)	J ±0,05 (.002)
DE	Front	23,01 (.906)	11,50 (.453)	24,99 (.984)	12,49 (.492)	13,84 (.545)	6,93 (.273)	2,23 (.088)	1,11 (.044)	2,10 (.083)
	Rear	21,28 (.838)	10,64 (.419)	24,99 (.984)	12,49 (.492)	12,21 (.481)	6,12 (.241)	2,23 (.088)	1,11 (.044)	3,35 (.132)
DA	Front	31,34 (1.234)	15,67 (.617)	33,32 (1.312)	16,66 (.656)	13,84 (.545)	6,93 (.273)	2,23 (.088)	1,11 (.044)	2,10 (.083)
	Rear	29,61 (1.166)	14,80 (.583)	33,32 (1.312)	16,66 (.656)	12,21 (.481)	6,12 (.241)	2,23 (.088)	1,11 (.044)	3,35 (.132)
DB	Front	45,08 (1.775)	22,55 (.888)	47,04 (1.852)	23,52 (.926)	13,84 (.545)	6,93 (.273)	2,23 (.088)	1,11 (.044)	2,10 (.083)
	Rear	43,33 (1.706)	21,66 (.853)	47,04 (1.852)	23,52 (.926)	12,21 (.481)	6,12 (.241)	2,23 (.088)	1,11 (.044)	3,35 (.132)
DC	Front	61,54 (2.423)	30,78 (1.212)	63,50 (2.500)	31,75 (1.250)	13,84 (.545)	6,93 (.273)	2,23 (.088)	1,11 (.044)	2,10 (.083)
	Rear	59,79 (2.354)	29,89 (1.177)	63,50 (2.500)	31,75 (1.250)	12,21 (.481)	6,12 (.241)	2,23 (.088)	1,11 (.044)	3,35 (.132)
DD	Front	59,15 (2.329)	29,59 (1.165)	61,11 (2.406)	30,55 (1.203)	16,63 (.655)	8,33 (.328)	2,23 (.088)	1,11 (.044)	2,10 (.083)
	Rear	57,15 (2.250)	28,57 (1.125)	61,11 (2.406)	30,55 (1.203)	14,90 (.587)	7,46 (.294)	2,23 (.088)	1,11 (.044)	3,35 (.132)

Dimensions are shown in mm (inch)
Dimensions subject to change

Plug Contact Cavity Arrangements — Combo D®

Face View Pin Insert

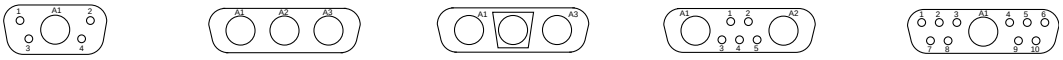

Shell Size	E	A	A	A	A
Contact Arrangment	5W1	3W3	3WK3	7W2	11W1
No. of Size 20 Cavities	4 #20	0 #20	0	5 #20	10 #20
No. of Size 8 Cavities	1 #8	3 #8	3	2 #8	1 #8

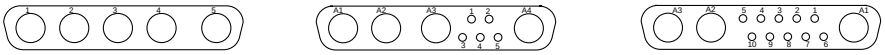

Shell Size	B	B	B
Contact Arrangement	5W5	9W4	13W3
No. of Size 20 Cavities	0 #20	5 #20	10 #20
No. of Size 8 Cavities	5 #8	4 #8	3 #8

Shell Size	B	B
Contact Arrangement	17W2	21W1
No. of Size 20 Cavities	15 #20	20 #20
No. of Size 8 Cavities	2 #8	1 #8

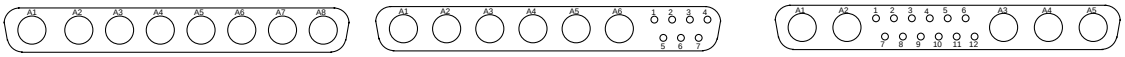

Shell Size	C	C	C
Contact Arrangement	8W8	13W6	17W5
No. of Size 20 Cavities	0 #20	7 #20	12 #20
No. of Size 8 Cavities	8 #8	6 #8	5 #8

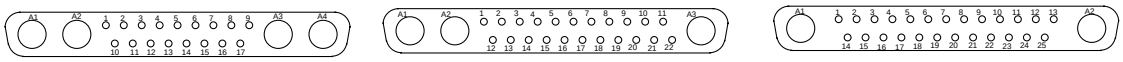

Shell Size	C	C	C
Contact Arrangement	21WA4	25W3	27W2
No. of Size 20 Cavities	17 #20	22 #20	25 #20
No. of Size 8 Cavities	4 #8	3 #8	2 #8

Shell Size	D	D
Contact Arrangement	24W7	36W4
No. of Size 20 Cavities	17 #20	32 #20
No. of Size 8 Cavities	7 #8	4 #8

Shell Size	D	D
Contact Arrangement	43W2	47W1
No. of Size 20 Cavities	41 #20	46 #20
No. of Size 8 Cavities	2 #8	1 #8

Note: Size 8 Cavities will Accommodate Removable Coaxial, High Power and/or High Voltage Contacts.

Dimensions are shown in mm (inch)
Dimensions subject to change

Receptacle Contact Cavity Arrangements — Combo D®

Face View Socket Insert

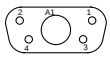
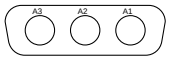
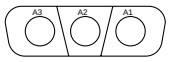
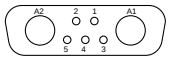
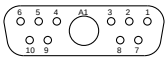

Shell Size	E	A	A	A	A
Contact Arrangement	5W1	3W3	3WK3	7W2	11W1
No. of Size 20 Cavities	4 #20	0 #20	0	5 #20	10 #20
No. of Size 8 Cavities	1 #8	3 #8	3	2 #8	1 #8

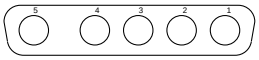
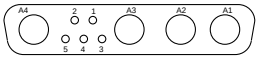
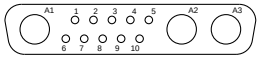

Shell Size	B	B	B
Contact Arrangement	5W5	9W4	13W3
No. of Size 20 Cavities	0 #20	5 #20	10 #20
No. of Size 8 Cavities	5 #8	4 #8	3 #8

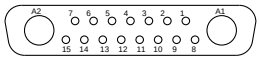
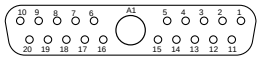

Shell Size	B	B
Contact Arrangement	17W2	21W1
No. of Size 20 Cavities	15 #20	20 #20
No. of Size 8 Cavities	2 #8	1 #8

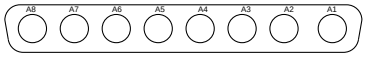
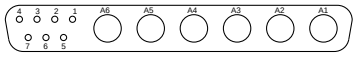
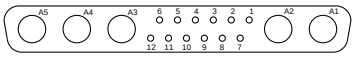

Shell Size	C	C	C
Contact Arrangement	8W8	13W6	17W5
No. of Size 20 Cavitites	0 #20	7 #20	12 #20
No. of Size 8 Cavities	8 #8	6 #8	5 #8

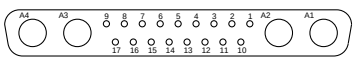
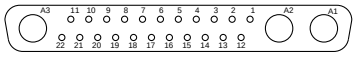
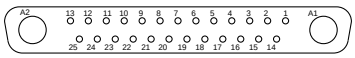

Shell Size	C	C	C
Contact Arrangement	21WA4	25W3	27W2
No. of Size 20 Cavities	17 #20	22 #20	25 #20
No. of Size 8 Cavities	4 #8	3 #8	2 #8

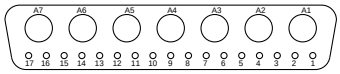
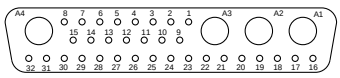

Shell Size	D	D
Contact Arrangement	24W7	36W4
No. of Size 20 Contacts	17 #20	32 #20
No. of Size 8 Contacts	7 #8	4 #8

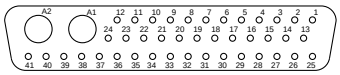
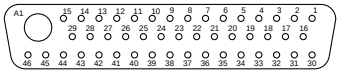

Shell Size	D	D
Contact Arrangement	43W2	47W1
No. of Size 20 Cavities	41 #20	46 #20
No. of Size 8 Cavities	2 #8	1 #8

Note: Size 8 Cavities will Accommodate Removable Coaxial, High Power and/or High Voltage Contacts.

Plug Contact Cavity Arrangements

Face View Pin Insert

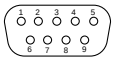
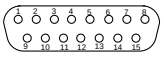
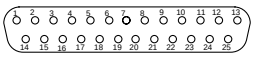

Shell Size	E	A	B
Contact Arrangement	9	15	25
Contact Size	#20	#20	#20

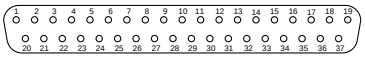
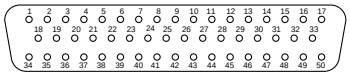

Shell Size	C	D
Contact Arrangement	37	50
Contact Size	#20	#20

Receptacle Contact Cavity Arrangements

Face View Socket Insert

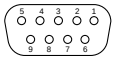
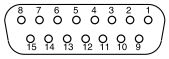
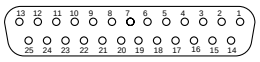

Shell Size	E	A	B
Contact Arrangement	9	15	25
Contact Size	#20	#20	#20

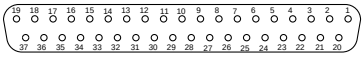
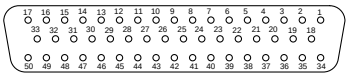

Shell Size	C	D
Contact Arrangement	37	50
Contact Size	#20	#20

ITT Cannon

Dimensions are shown in mm (inch)
Dimensions subject to change

Pushfit/Boardlock — Standard

Straight (Z)

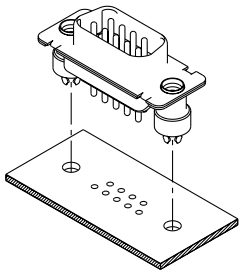

90° (C)

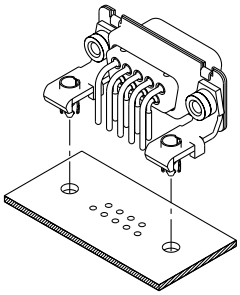

Pushfit/Boardlock — European

Straight (-146)

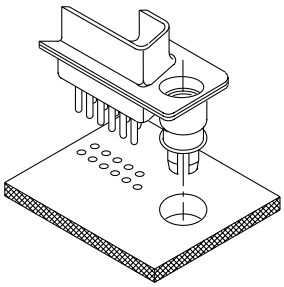

90° (-146)

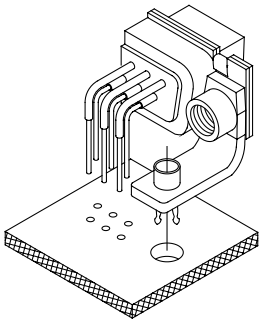

Alternate 50 Ohm Coaxial Configuration

Straight (X)

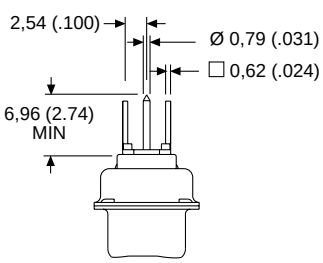

90° (X)

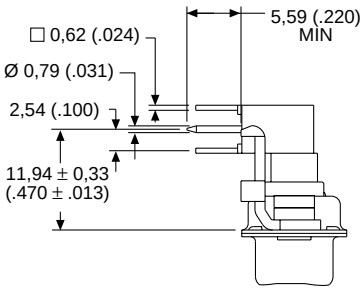

Hardware Views (Standard)

Through Hole (Eyelet)

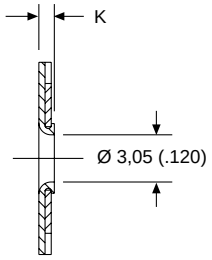

Tab Shells (K)

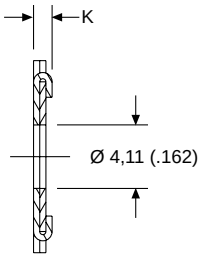

Clinch Nut (E)

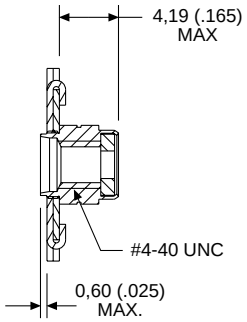

Dimensions — Plug

Shell Size	K ±0,317 (.0125)	K ±0,25 (.010)
DE	1,206 (.0475)	—
DA	1,206 (.0475)	—
DB	—	1,52 (.060)
DC	—	1,52 (.060)
DD	—	1,52 (.060)

Dimensions — Receptacle

Shell Size	K ±0,318 (.0125)
DE	1,206 (.0475)
DA	1,206 (.0475)
DB	1,206 (.0475)
DC	1,206 (.0475)
DD	1,206 (.0475)

Dual Float Mount (Y)

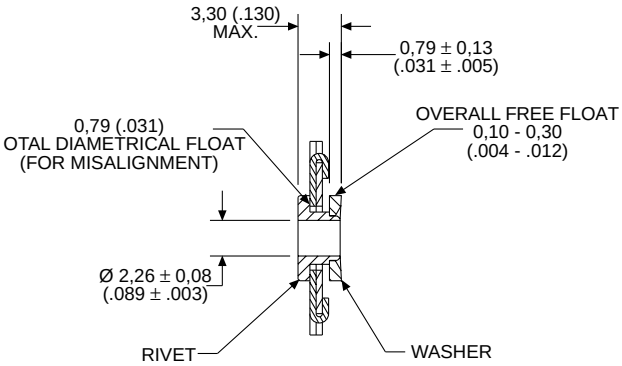

Alternate Bracket Configuration

Supplied with connectors without boardlocks.

Dimensions

Shell Size	R ±0,25 (.010)	S ±0,25 (.010)
DE, DA, DB, DC	11,61 (.457)	12,78 (.503)
DD	12,78 (.503)	13,95 (.549)

Standard Footprint (P)

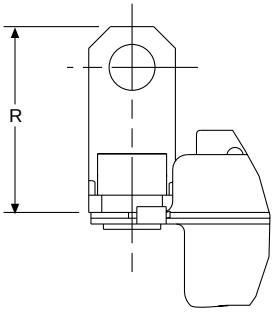

European Footprint (P)

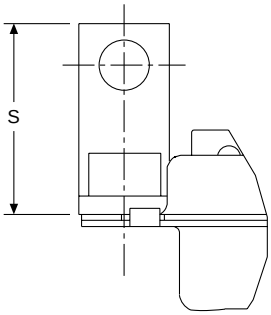

ITT Cannon

Dimensions are shown in mm (inch)
Dimensions subject to change

Hardware Views (European)

Through Hole

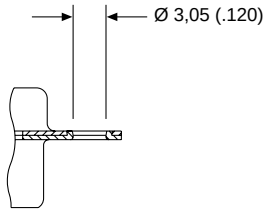

Clinch Nut (X/E)

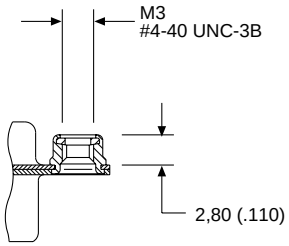

Plastic Bracket with Bushing (1A5N)

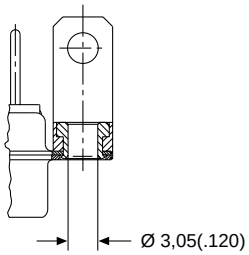

Plastic Bracket with Captive Nut (1ATN/1AVN)

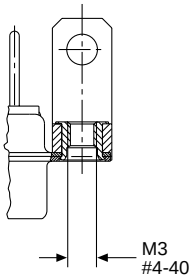

Plastic Bracket with Post (1APN/1A6N)

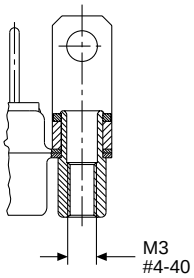

Metal Bracket with Bushing (1AFN)

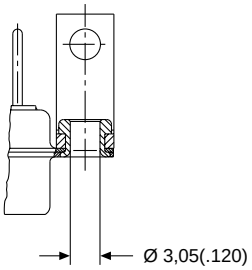

Metal Bracket with Captive Nut (1A9N/1A7N)

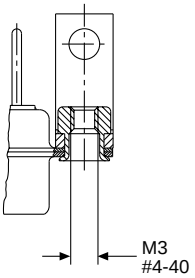

Metal Bracket with Post (1AHN/1A8N)

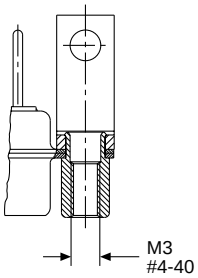

Dimensions are shown in mm (inch)
Dimensions subject to change

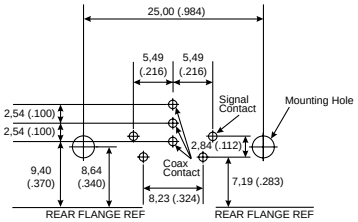

Shell Size	E
Contact Arrangement	5W1
No. of Size 20 Cavities	4 #20
No. of Size 8 Cavities	1 #8

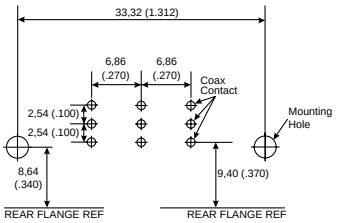

Shell Size	A
Contact Arrangement	3W3
No. of Size 20 Cavities	0 #20
No. of Size 8 Cavities	3 #8

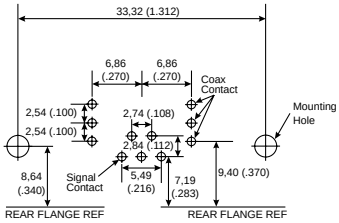

Shell Size	A
Contact Arrangement	7W2
No. of Size 20 Cavities	5 #20
No. of Size 8 Cavities	2 #8

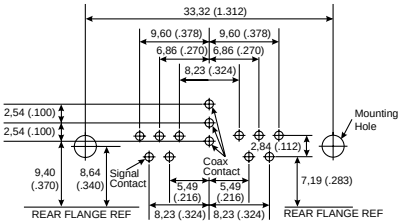

Shell Size	A
Contact Arrangement	11W1
No. of Size 20 Cavities	10 #20
No. of Size 8 Cavities	1 #8

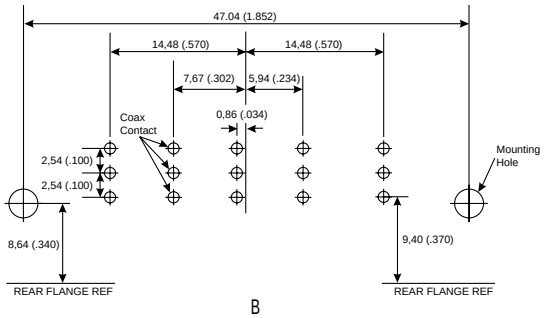

Shell Size	B
Contact Arrangement	5W5
No. of Size 20 Cavities	0 #20
No. of Size 8 Cavities	5 #8

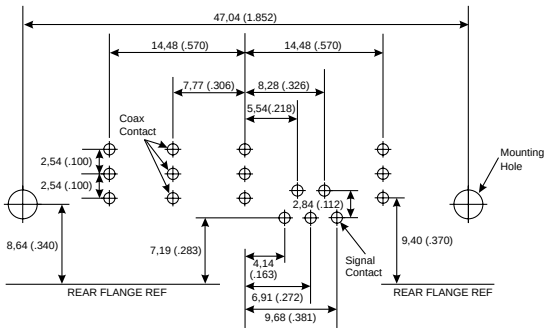

Shell Size	B
Contact Arrangement	9W4
No. of Size 20 Cavities	5 #20
No. of Size 8 Cavities	4 #8

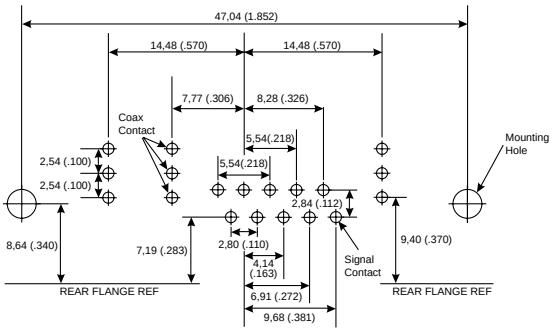

Shell Size	B
Contact Arrangement	13W3
No. of Size 20 Cavities	10 #20
No. of Size 8 Cavities	3 #8

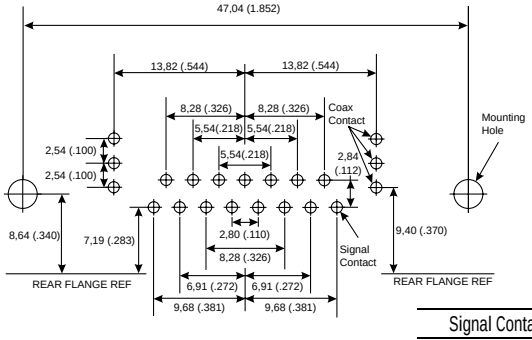

Shell Size	B
Contact Arrangement	17W2
No. of Size 20 Cavities	15 #20
No. of Size 8 Cavities	2 #8

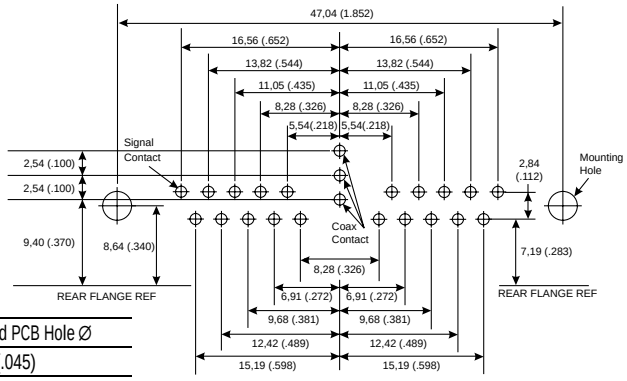

Shell Size	B
Contact Arrangement	21W1
No. of Size 20 Cavities	20 #20
No. of Size 8 Cavities	1 #8

Signal Contact Ø	Recommended PCB Hole Ø
0,76 (.030)	1,14 (.045)

Mounting Type	Recommended PCB Hole Ø
Without Boardlock	3,05 (.120)
With Boardlock	3,10 (.122)

Size 8 Contact Type	Recommended PCB Hole Ø
Coaxial (C or X)	1,14 (.045)

ITT Cannon

Dimensions are shown in mm (inch)
Dimensions subject to change

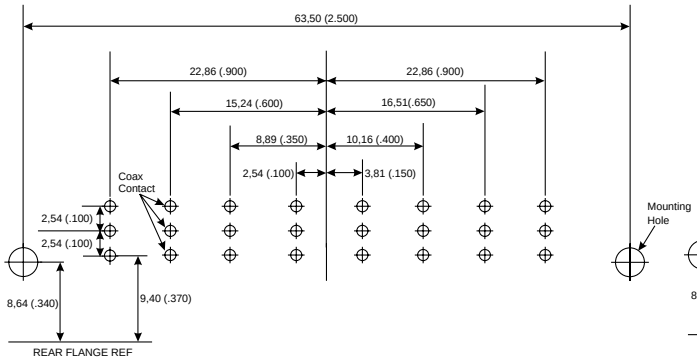

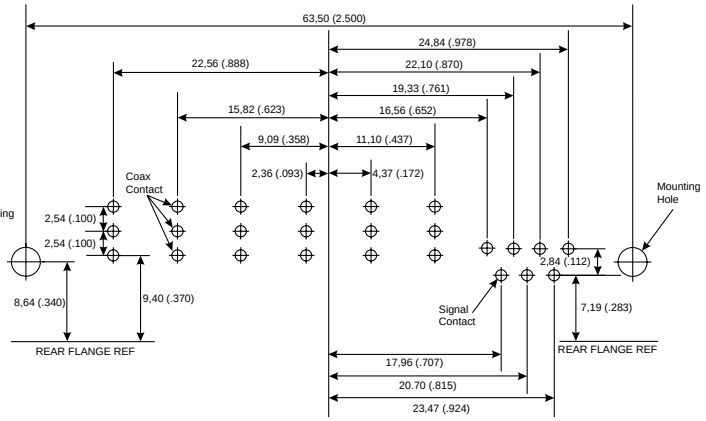

Shell Size	C	C
Contact Arrangement	8W8	13W6
No. of Size 20 Cavities	0 #20	7 #20
No. of Size 8 Cavities	8 #8	6 #8

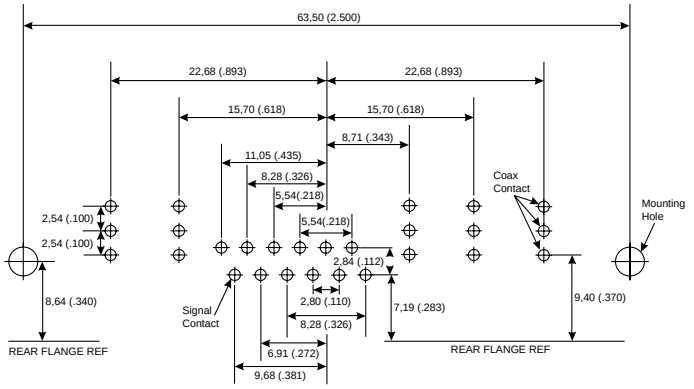

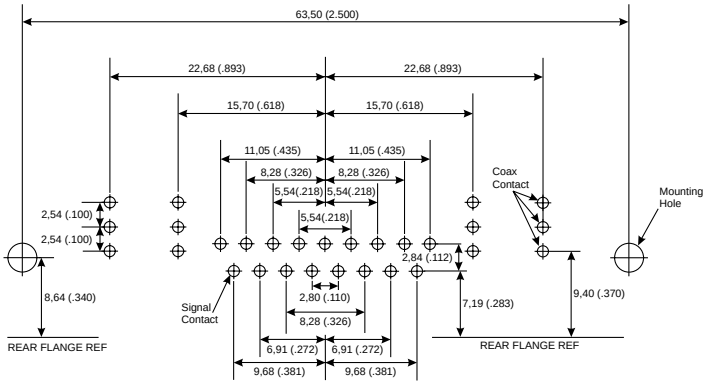

Shell Size	C	C
Contact Arrangement	17W5	21WA4
No. of Size 20 Cavities	12 #20	17 #20
No. of Size 8 Cavities	5 #8	4 #8

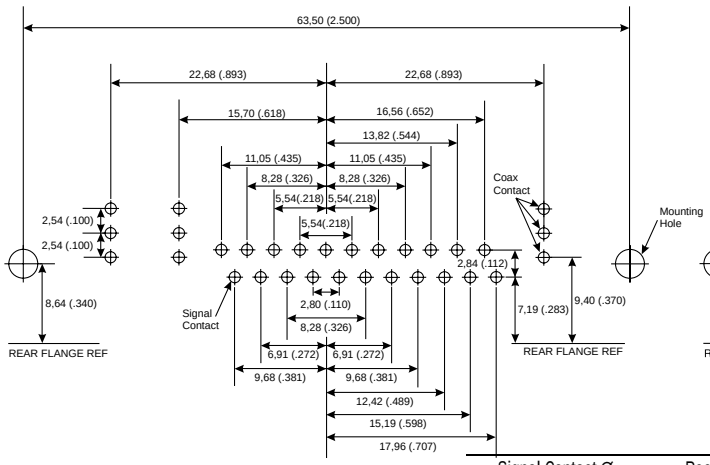

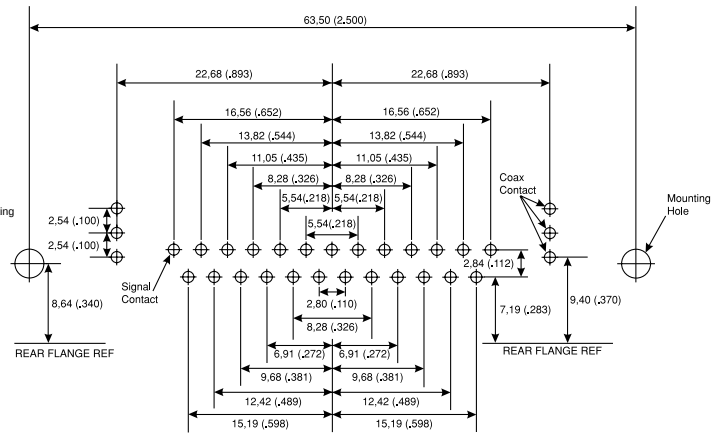

Shell Size	C	C
Contact Arrangement	25W3	27W2
No. of Size 20 Cavities	22 #20	25 #20
No. of Size 8 Cavities	3 #8	2 #8

Signal Contact Ø	Recommended PCB Hole Ø
0,76 (.030)	1,14 (.045)

Mounting Type	Recommended PCB Hole Ø
Without Boardlock	3,05 (.120)
With Boardlock	3,10 (.122)

Size 8 Contact Type	Recommended PCB Hole Ø
Coaxial (C or X)	1,14 (.045)

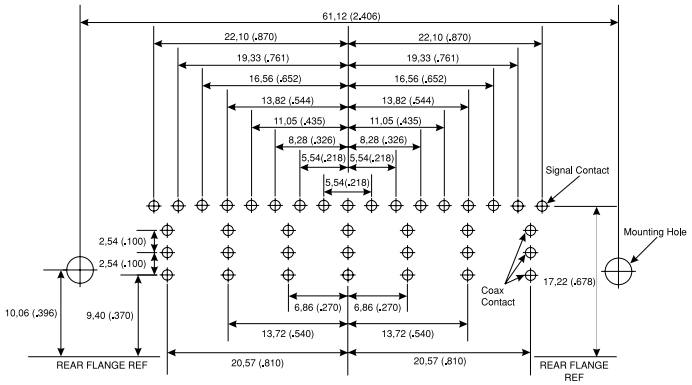

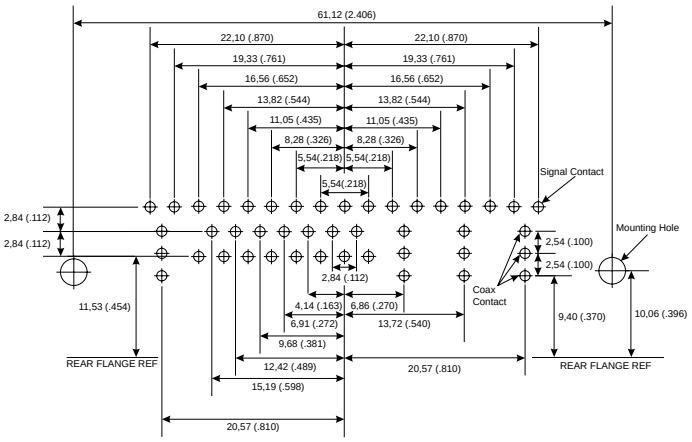

Shell Size	D	D
Contact Arrangement	24W7	36W4
No. of Size 20 Cavities	17 #20	32 #20
No. of Size 8 Cavities	7 #8	4 #8

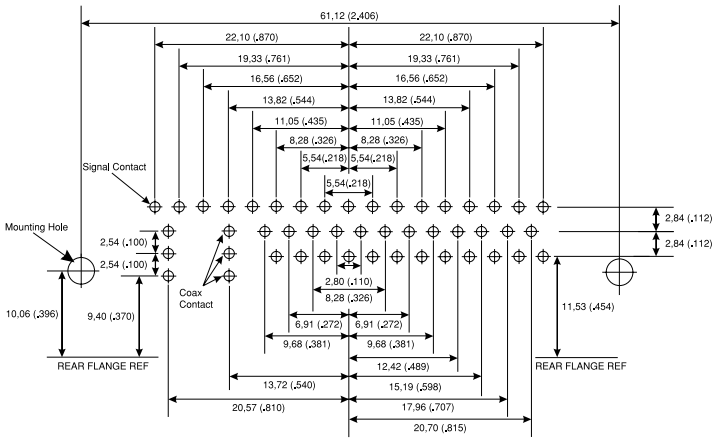

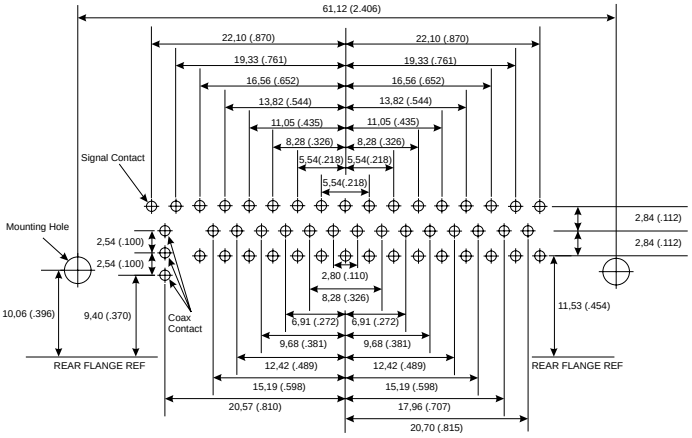

Shell Size	D	D
Contact Arrangement	43W2	47W1
No. of Size 20 Cavities	41 #20	46 #20
No. of Size 8 Cavities	2 #20	1 #20

Signal Contact Ø	Recommended PCB Hole Ø
0,76 (.030)	1,14 (.045)

Mounting Type	Recommended PCB Hole Ø
Without Boardlock	3,05 (.120)
With Boardlock	3,10 (.122)

Size 8 Contact Type	Recommended PCB Hole Ø
Coaxial (C or X)	1,14 (.045)

Dimensions are shown in mm (inch)
Dimensions subject to change

PCB Hole Pattern — Standard

Coaxial 90° — Receptacle

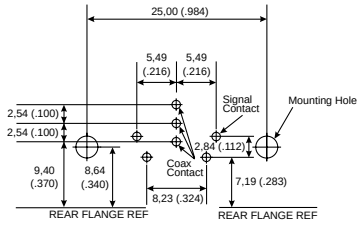

Shell Size	E
Contact Arrangement	5W1
No. of Size 20 Cavities	4 #20
No. of Size 8 Cavities	1 #8

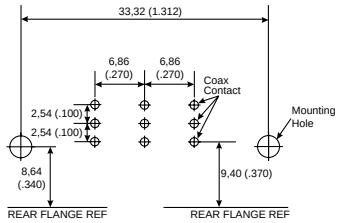

Shell Size	A
Contact Arrangement	3W3
No. of Size 20 Cavities	0 #20
No. of Size 8 Cavities	3 #8

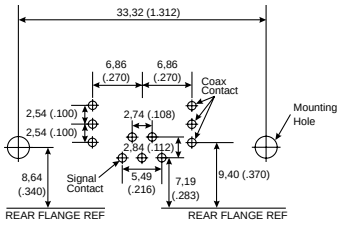

Shell Size	A
Contact Arrangement	7W2
No. of Size 20 Cavities	5 #20
No. of Size 8 Cavities	2 #8

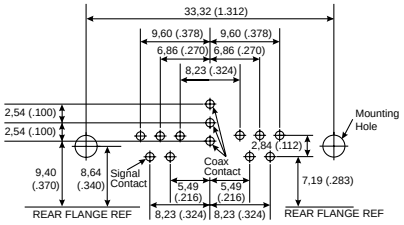

Shell Size	A
Contact Arrangement	11W1
No. of Size 20 Cavities	10 #20
No. of Size 8 Cavities	1 #8

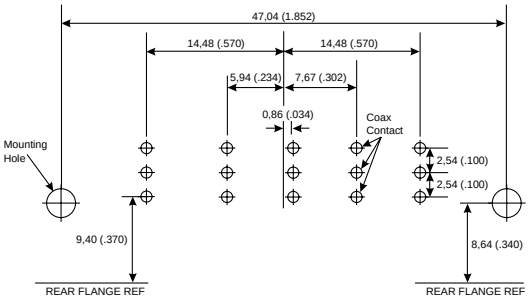

Shell Size	B
Contact Arrangement	5W5
No. of Size 20 Cavities	0 #20
No. of Size 8 Cavities	5 #8

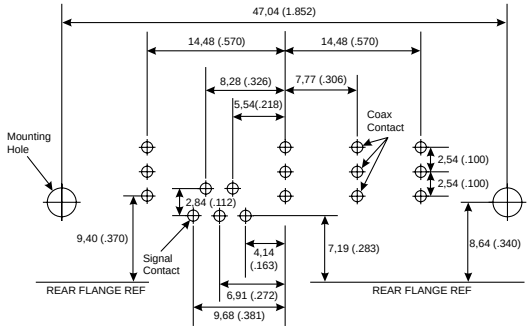

Shell Size	B
Contact Arrangement	9W4
No. of Size 20 Cavities	5 #20
No. of Size 8 Cavities	4 #8

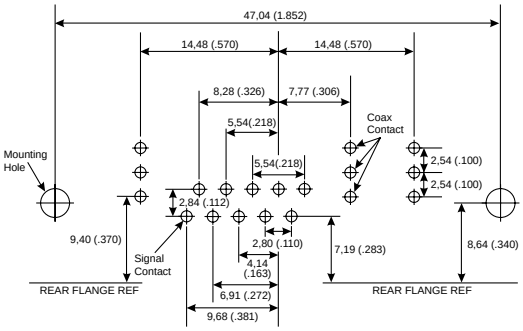

Shell Size	B
Contact Arrangement	13W3
No. of Size 20 Cavities	10 #20
No. of Size 8 Cavities	3 #8

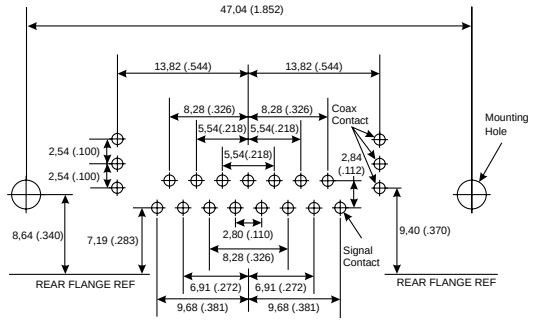

Shell Size	B
Contact Arrangement	17W2
No. of Size 20 Cavities	15 #20
No. of Size 8 Cavities	2 #8

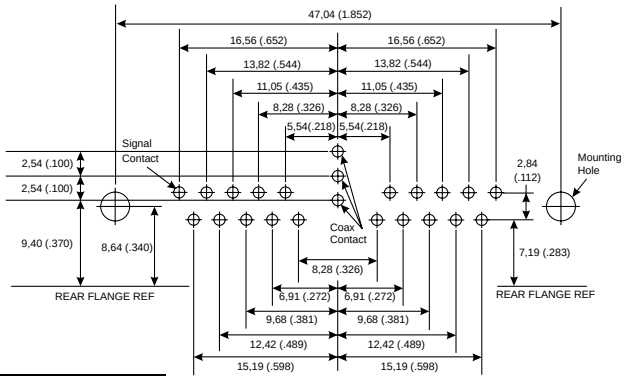

Shell Size	B
Contact Arrangement	21W1
No. of Size 20 Cavities	20 #20
No. of Size 8 Cavities	1 #8

Signal Contact Ø	Recommended PCB Hole Ø
0,76 (.030)	1,14 (.045)

Mounting Type	Recommended PCB Hole Ø
Without Boardlock	3,05 (.120)
With Boardlock	3,10 (.122)

Size 8 Contact Type	Recommended PCB Hole Ø
Coaxial (C or X)	1,14 (.045)

Reader's Resource

ITT Cannon

Dimensions are shown in mm (inch)
Dimensions subject to change

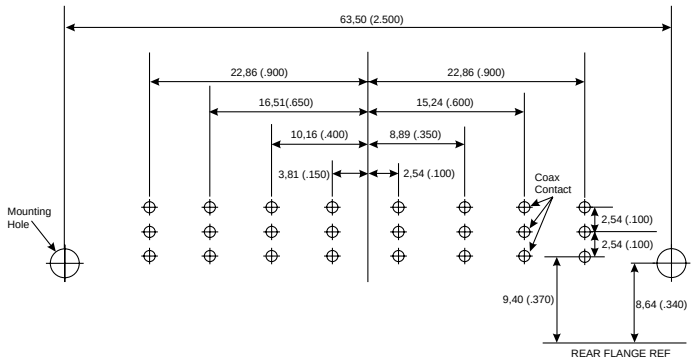

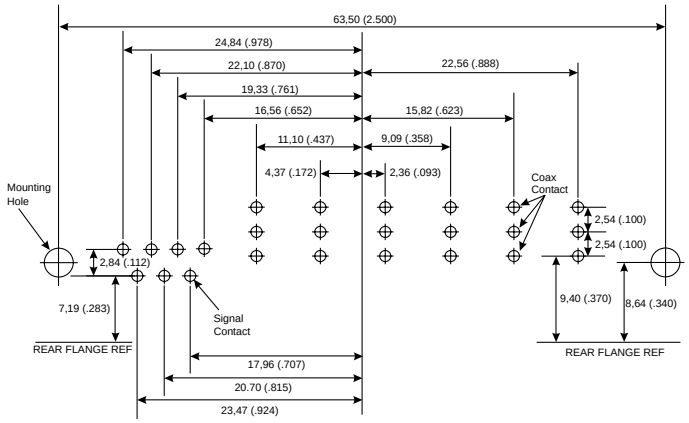

Shell Size	C	C
Contact Arrangement	8W8	13W6
No. of Size 20 Cavities	0 #20	7 #20
No. of Size 8 Cavities	8 #8	6 #8

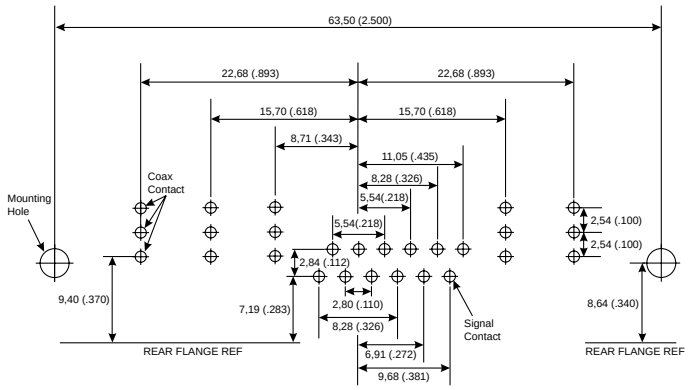

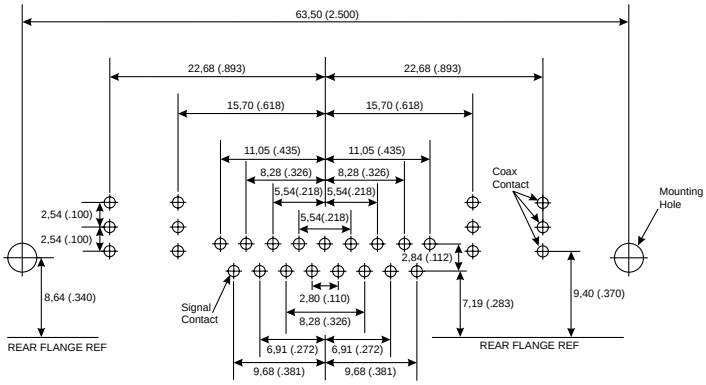

Shell Size	C	C
Contact Arrangement	17W5	21WA4
No. of Size 20 Cavities	12 #20	17 #20
No. of Size 8 Cavities	5 #8	4 #8

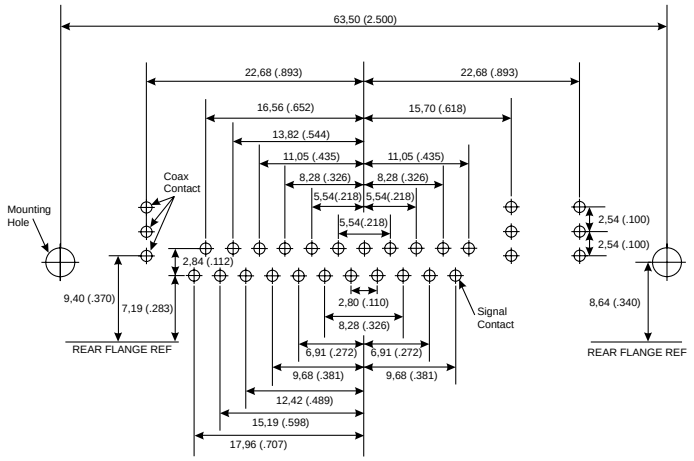

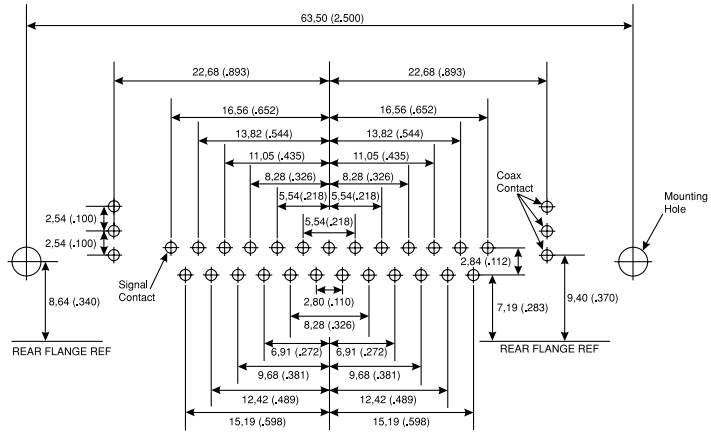

Shell Size	C	C
Contact Arrangement	25W3	27W2
No. of Size 20 Cavities	22 #20	25 #20
No. of Size 8 Cavities	3 #8	2 #8

Signal Contact Ø	Recommended PCB Hole Ø
0,76 (.030)	1,14 (.045)

Mounting Type	Recommended PCB Hole Ø
Without Boardlock	3,05 (.120)
With Boardlock	3,10 (.122)

Size 8 Contact Type	Recommended PCB Hole Ø
Coaxial (C or X)	1,14 (.045)

Dimensions are shown in mm (inch)
Dimensions subject to change

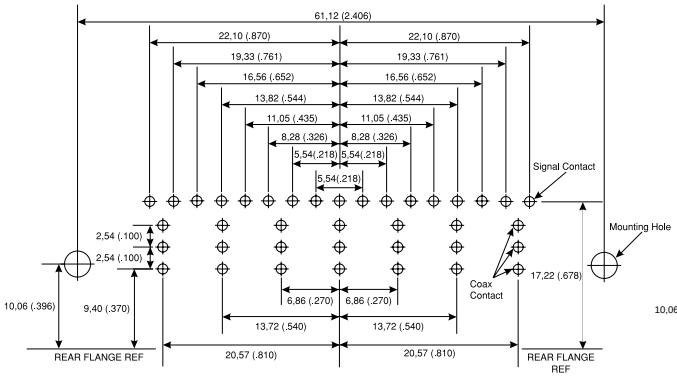

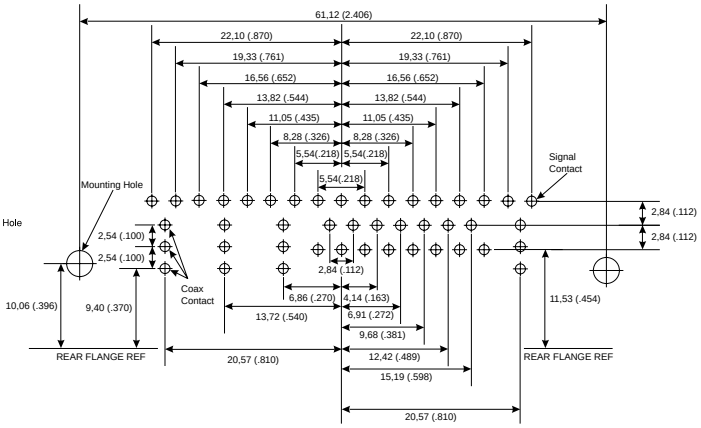

Shell Size	D	D
Contact Arrangement	24W7	36W4
No. of Size 20 Cavities	17 #20	32 #20
No. of Size 8 Cavities	7 #8	4 #8

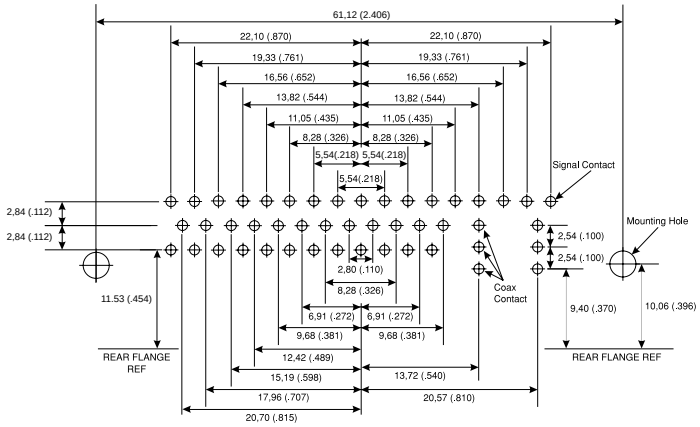

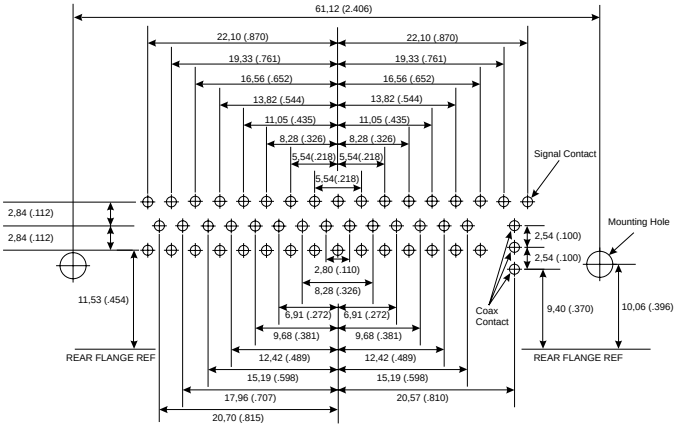

Shell Size	D	D
Contact Arrangement	43W2	47W1
No. of Size 20 Cavities	41 #20	46 #20
No. of Size 8 Cavities	2 #8	1 #8

Signal Contact Ø	Recommended PCB Hole Ø
0,76 (.030)	1,14 (.045)

Mounting Type	Recommended PCB Hole Ø
Without Boardlock	3,05 (.120)
With Boardlock	3,10 (.122)

Size 8 Contact Type	Recommended PCB Hole Ø
Coaxial (C or X)	1,14 (.045)

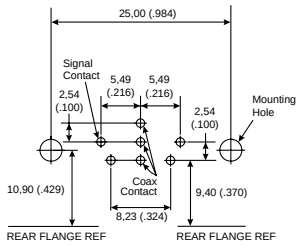

Shell Size	E
Contact Arrangement	5W1
No. of Size 20 Cavities	4 #20
No. of Size 8 Cavities	1 #8

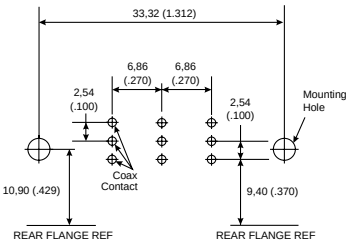

Shell Size	A
Contact Arrangement	3W3
No. of Size 20 Cavities	0 #20
No. of Size 8 Cavities	3 #8

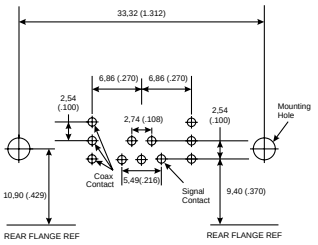

Shell Size	A
Contact Arrangement	7W2
No. of Size 20 Cavities	5 #20
No. of Size 8 Cavities	2 #8

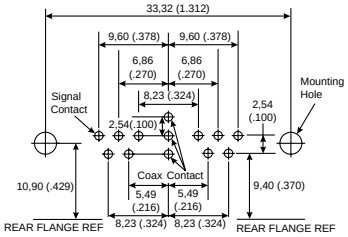

Shell Size	A
Contact Arrangement	11W1
No. of Size 20 Cavities	10 #20
No. of Size 8 Cavities	1 #8

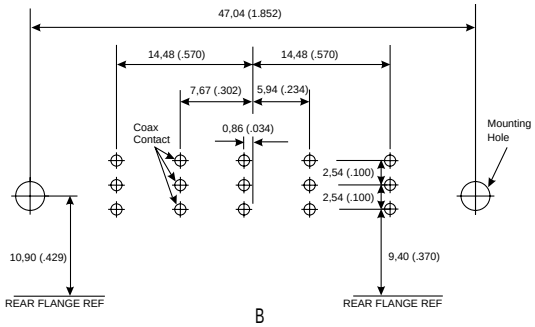

Shell Size	B
Contact Arrangement	5W5
No. of Size 20 Cavities	0 #20
No. of Size 8 Cavities	5 #8

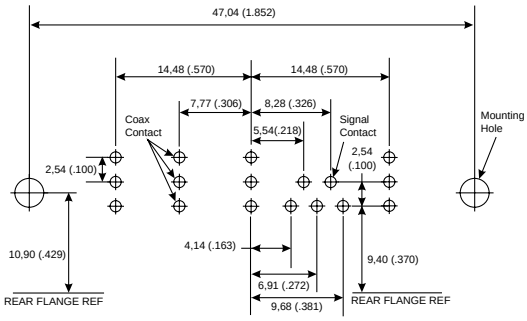

Shell Size	B
Contact Arrangement	9W4
No. of Size 20 Cavities	5 #20
No. of Size 8 Cavities	4 #8

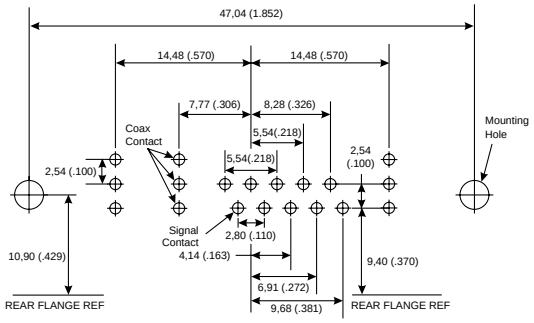

Shell Size	B
Contact Arrangement	13W3
No. of Size 20 Cavities	10 #20
No. of Size 8 Cavities	3 #8

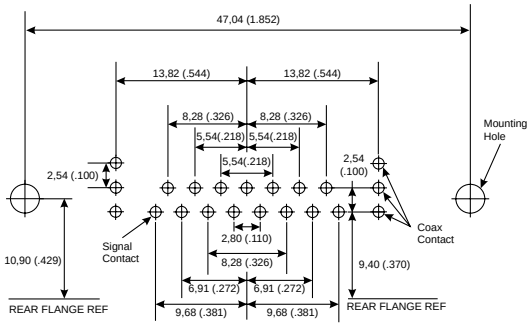

Shell Size	B
Contact Arrangement	17W2
No. of Size 20 Cavities	15 #20
No. of Size 8 Cavities	2 #8

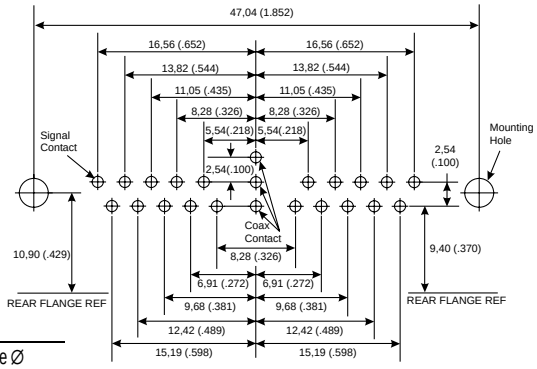

Shell Size	B
Contact Arrangement	21W1
No. of Size 20 Cavities	20 #20
No. of Size 8 Cavities	1 #8

Signal Contact Ø	Recommended PCB Hole Ø
0,60 (.024)	1,00 (.039)

Mounting Type	Recommended PCB Hole Ø
Without Boardlock	3,05 (.120)
With Boardlock	3,10 (.122)

Size 8 Contact Type	Recommended PCB Hole Ø
Coaxial (C or X)	1,14 (.045)

ITT Cannon

Dimensions are shown in mm (inch)
Dimensions subject to change

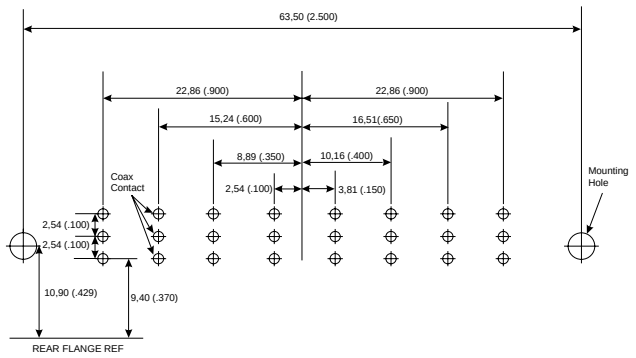

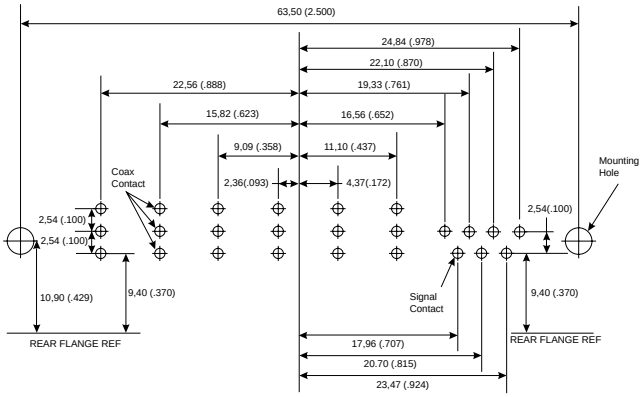

Shell Size	C	C
Contact Arrangement	8W8	13W6
No. of Size 20 Cavities	0 #20	7 #20
No. of Size 8 Cavities	8 #8	6 #8

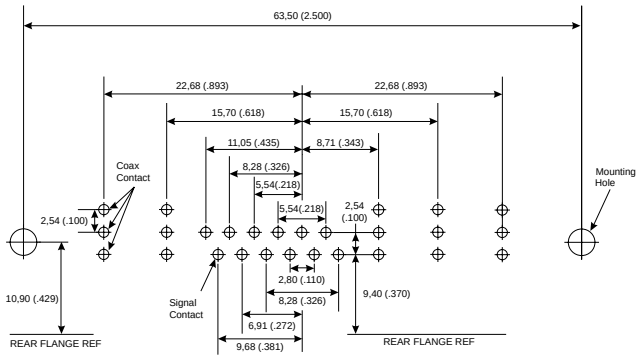

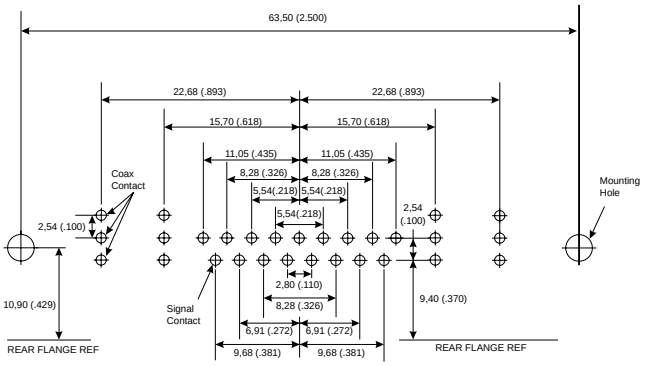

Shell Size	C	C
Contact Arrangement	17W5	21WA4
No. of Size 20 Cavities	12 #20	17 #20
No. of Size 8 Cavities	5 #8	4 #8

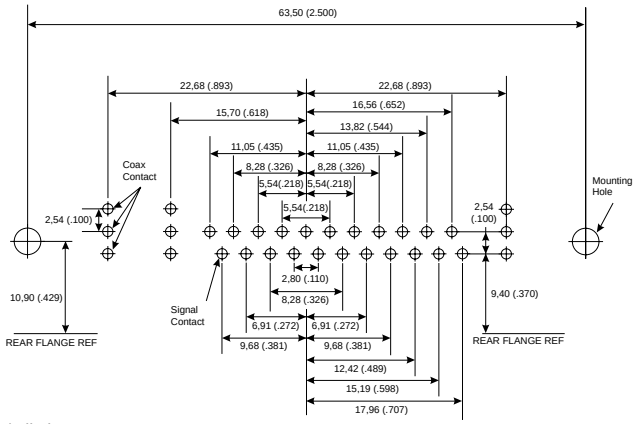

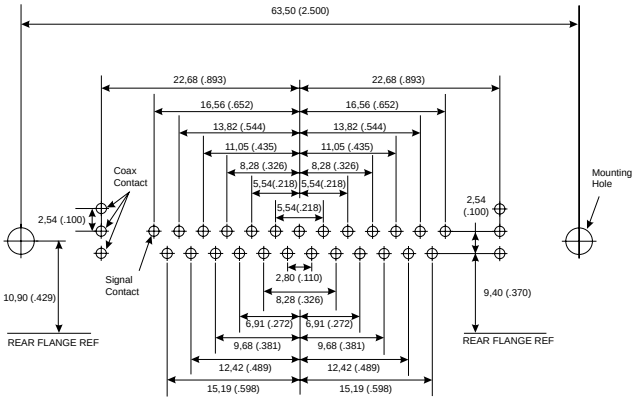

Shell Size	C	C
Contact Arrangement	25W3	27W2
No. of Size 20 Cavities	22 #20	25 #20
No. of Size 8 Cavities	3 #8	2 #8

Signal Contact Ø	Recommended PCB Hole Ø
0,60 (.024)	1,00 (.039)

Mounting Type	Recommended PCB Hole Ø
Without Boardlock	3,05 (.120)
With Boardlock	3,10 (.122)

Size 8 Contact Type	Recommended PCB Hole Ø
Coaxial (C or X)	1,14 (.045)

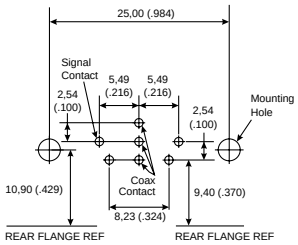

Shell Size	E
Contact Arrangement	5W1
No. of Size 20 Cavities	4 #20
No. of Size 8 Cavities	1 #8

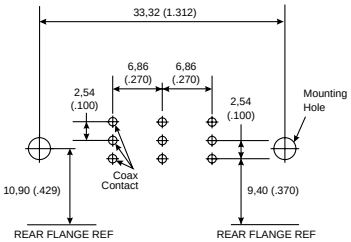

Shell Size	A
Contact Arrangement	3W3
No. of Size 20 Cavities	0 #20
No. of Size 8 Cavities	3 #8

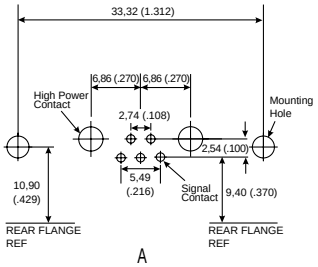

Shell Size	A
Contact Arrangement	7W2
No. of Size 20 Cavities	5 #20
No. of Size 8 Cavities	2 #8

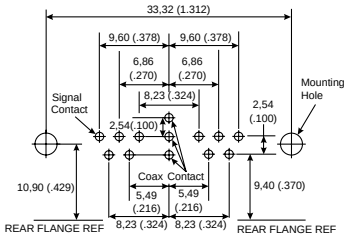

Shell Size	A
Contact Arrangement	11W1
No. of Size 20 Cavities	10 #20
No. of Size 8 Cavities	1 #8

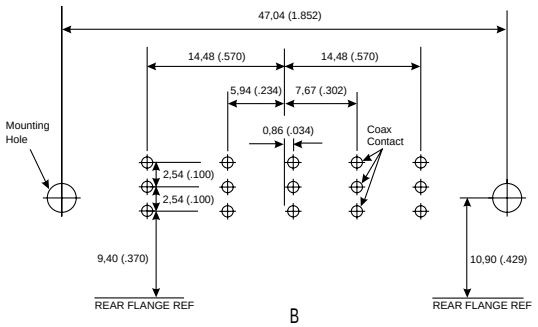

Shell Size	B
Contact Arrangement	5W5
No. of Size 20 Cavities	0 #20
No. of Size 8 Cavities	5 #8

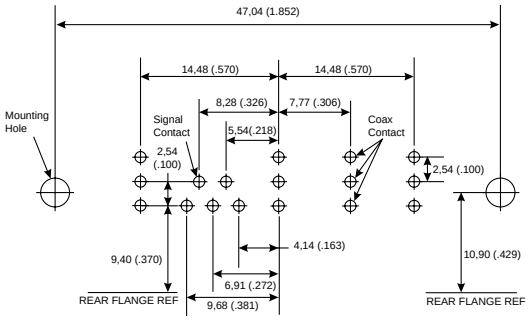

Shell Size	B
Contact Arrangement	9W4
No. of Size 20 Cavities	5 #20
No. of Size 8 Cavities	4 #8

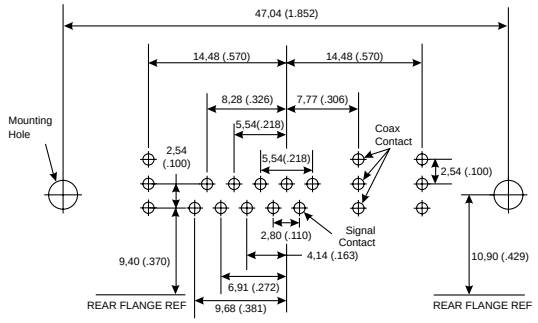

Shell Size	B
Contact Arrangement	13W3
No. of Size 20 Cavities	10 #20
No. of Size 8 Cavities	3 #8

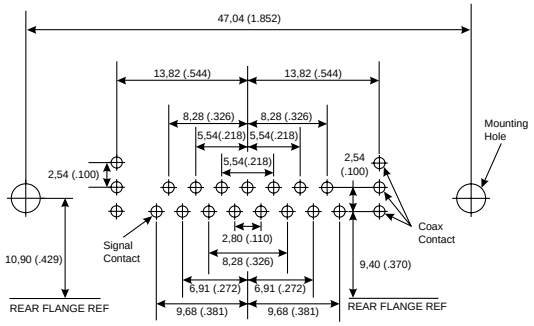

Shell Size	B
Contact Arrangement	17W2
No. of Size 20 Cavities	15 #20
No. of Size 8 Cavities	2 #8

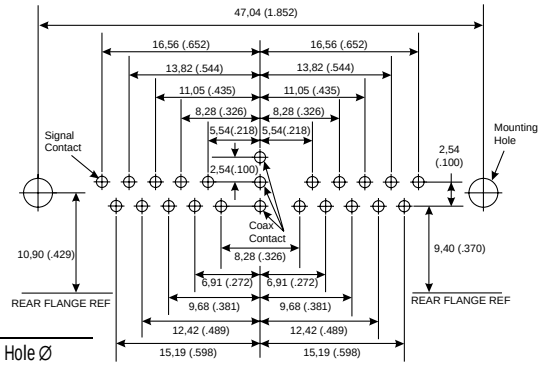

Shell Size	B
Contact Arrangement	21W1
No. of Size 20 Cavities	20 #20
No. of Size 8 Cavities	1 #8

Signal Contact Ø	Recommended PCB Hole Ø
0,60 (.024)	1,00 (.039)

Mounting Type	Recommended PCB Hole Ø
Without Boardlock	3,05 (.120)
With Boardlock	3,10 (.122)

Size 8 Contact Type	Recommended PCB Hole Ø
Coaxial (C or X)	1,14 (.045)

ITT Cannon

Dimensions are shown in mm (inch)
Dimensions subject to change

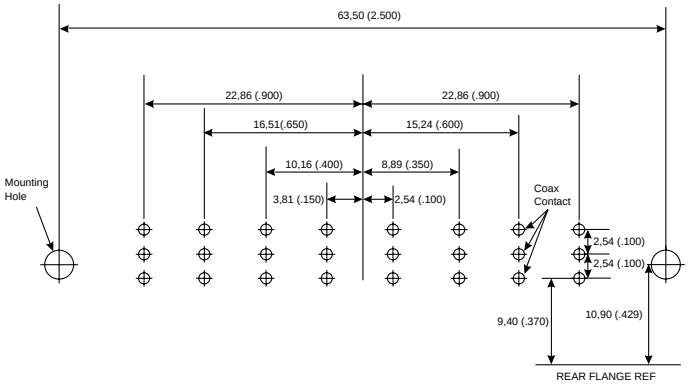

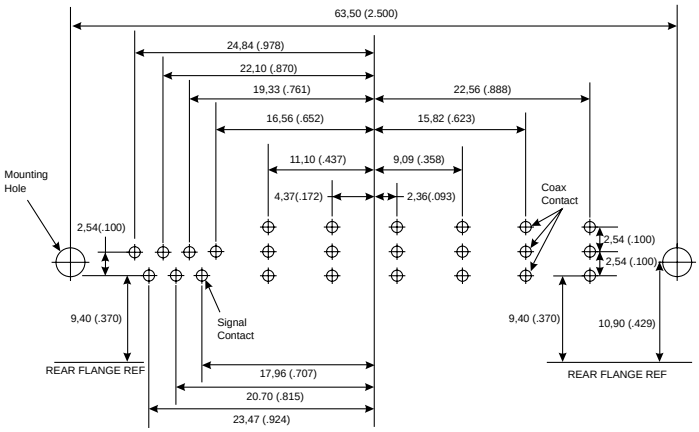

Shell Size	C	C
Contact Arrangement	8W8	13W6
No. of Size 20 Cavities	0 #20	7 #20
No. of Size 8 Cavities	8 #8	6 #8

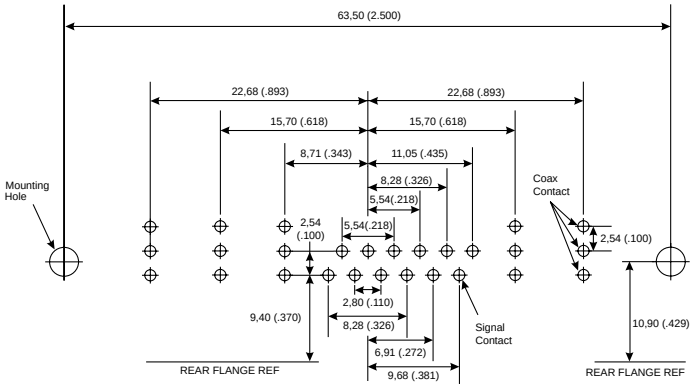

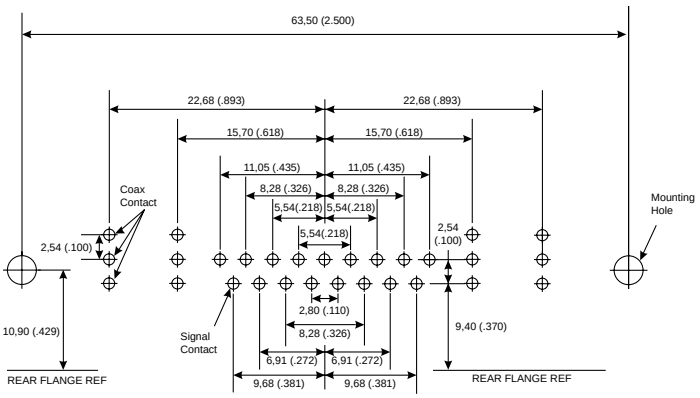

Shell Size	C	C
Contact Arrangement	17W5	21WA4
No. of Size 20 Cavities	12 #20	17 #20
No. of Size 8 Cavities	5 #8	4 #8

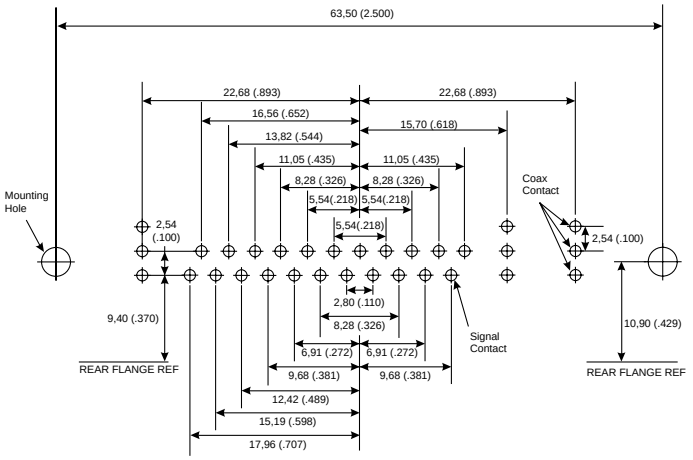

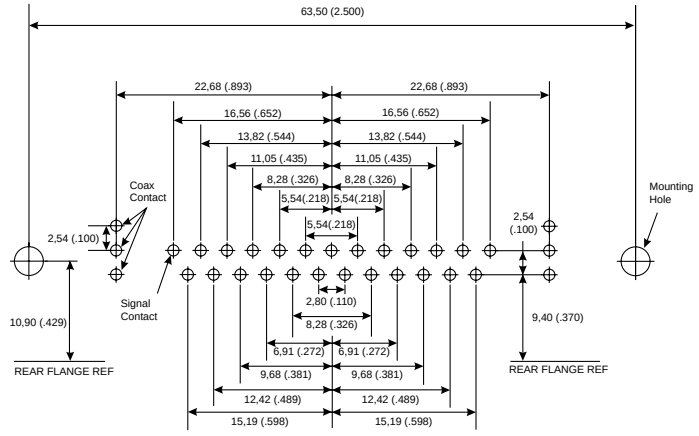

Shell Size	C	C
Contact Arrangement	25W3	27W2
No. of Size 20 Cavities	22 #20	25 #20
No. of Size 8 Cavities	3 #8	2 #8

Signal Contact Ø	Recommended PCB Hole Ø
0,60 (.024)	1,00 (.039)

Mounting Type	Recommended PCB Hole Ø
Without Boardlock	3,05 (.120)
With Boardlock	3,10 (.122)

Size 8 Contact Type	Recommended PCB Hole Ø
Coaxial (C or X)	1,14 (.045)

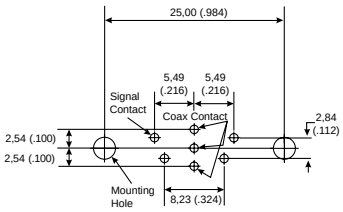

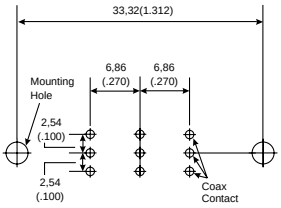

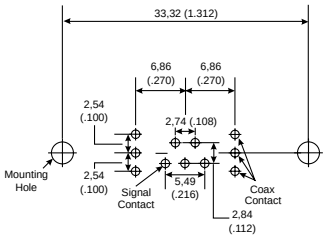

Shell Size	E	A	A
Contact Arrangement	5W1	3W3	7W2
No. of Size 20 Cavities	4 #20	0 #20	5 #20
No. of Size 8 Cavities	1 #8	3 #8	2 #8

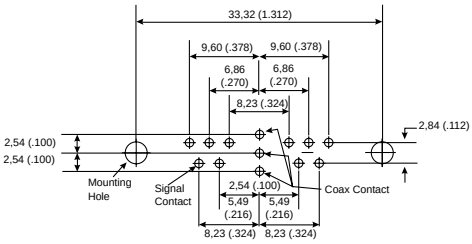

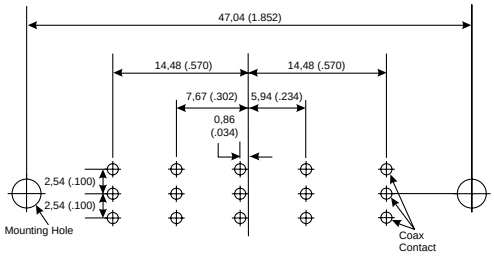

Shell Size	A	B
Contact Arrangement	11W1	5W5
No. of Size 20 Cavities	10 #20	0 #20
No. of Size 8 Cavities	1 #8	5 #8

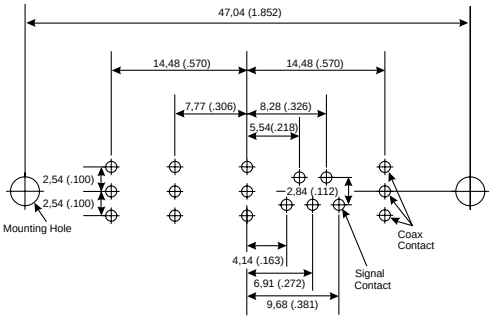

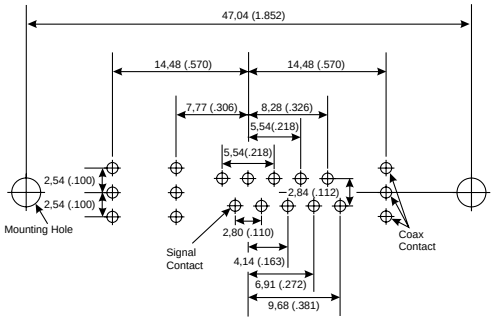

Shell Size	B	B
Contact Arrangement	9W4	13W3
No. of Size 20 Cavities	5 #20	10 #20
No. of Size 8 Cavities	4 #8	3 #8

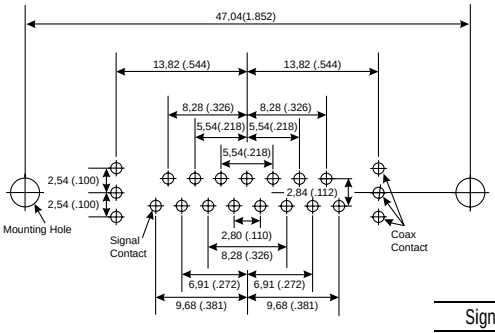

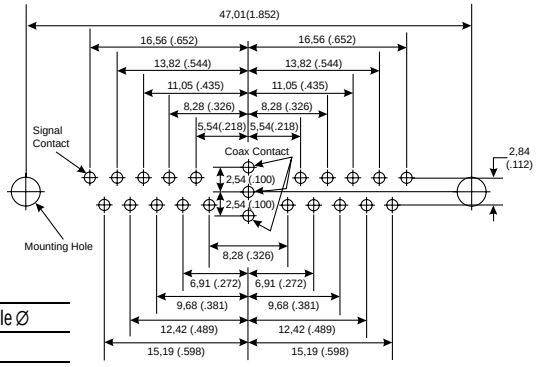

Shell Size	B	B
Contact Arrangement	17W2	21W1
No. of Size 20 Cavities	15 #20	20 #20
No. of Size 8 Cavities	2 #8	1 #8

Signal Contact Ø	Recommended PCB Hole Ø
0,60 (.024)	1,00 (.039)
0,76 (.030)	1,14 (.045)

Mounting Type	Recommended PCB Hole Ø
Without Boardlock	3,05 (.120)
With Boardlock	3,10 (.122)

Size 8 Contact Type	Recommended PCB Hole Ø
Coaxial (C or X)	1,14 (.045)

Dimensions are shown in mm (inch)
Dimensions subject to change

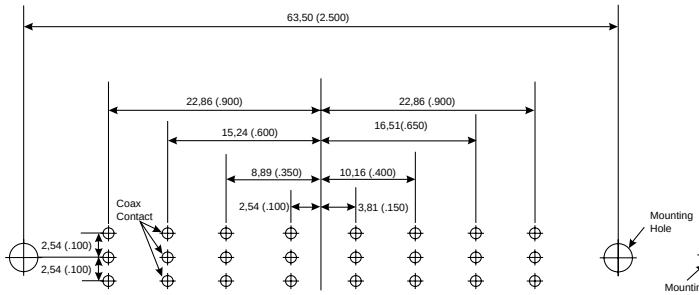

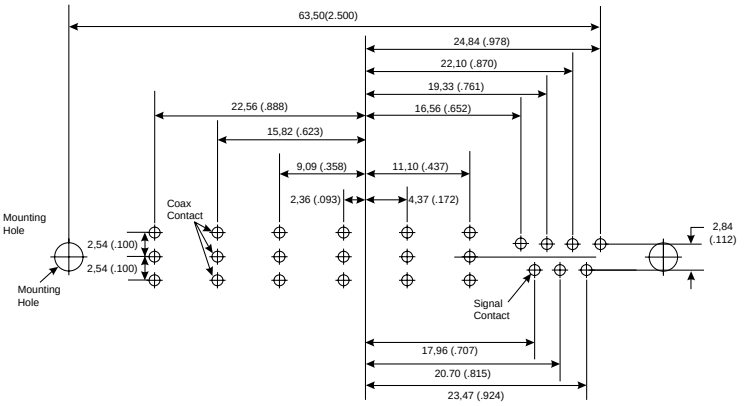

Shell Size	C	C
Contact Arrangement	8W8	13W6
No. of Size 20 Cavities	0 #20	7 #20
No. of Size 8 Cavities	8 #8	6 #8

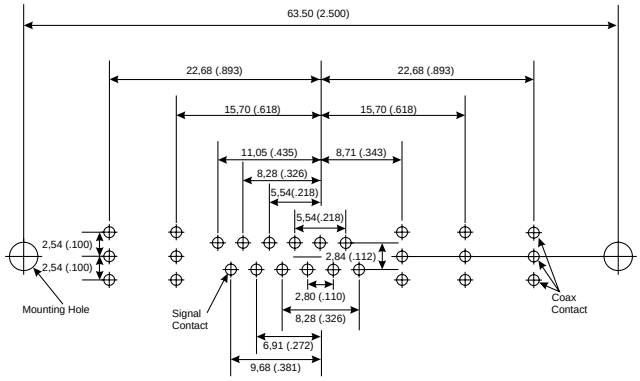

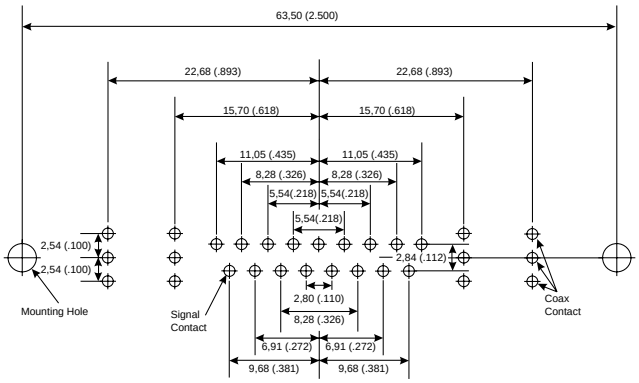

Shell Size	C	C
Contact Arrangement	17W5	21WA4
No. of Size 20 Cavities	12 #20	17 #20
No. of Size 8 Cavities	5 #8	4 #8

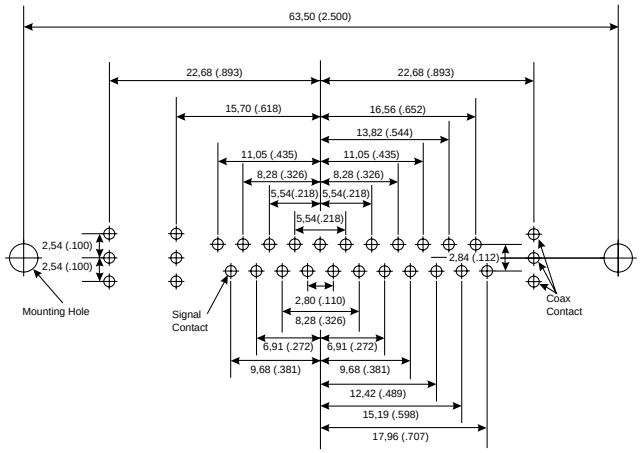

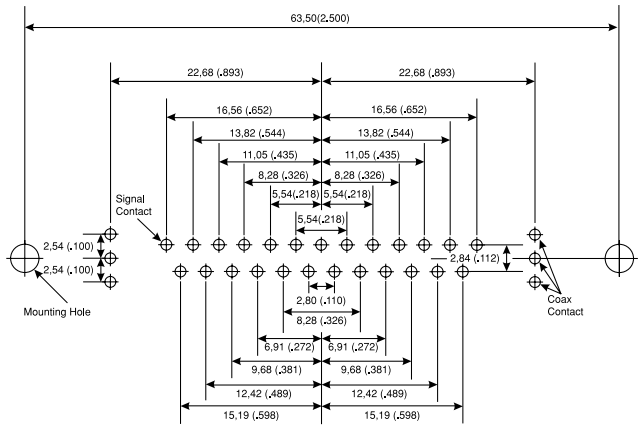

Shell Size	C	C
Contact Arrangement	25W3	27W2
No. of Size 20 Cavities	22 #20	25 #20
No. of Size 8 Cavities	3 #8	2 #8

Signal Contact Ø	Recommended PCB Hole Ø
0,60 (.024)	1,00 (.039)
0,76 (.030)	1,14 (.045)

Mounting Type	Recommended PCB Hole Ø
Without Boardlock	3,05 (.120)
With Boardlock	3,10 (.122)

Size 8 Contact Type	Recommended PCB Hole Ø
Coaxial (C or X)	1,14 (.045)

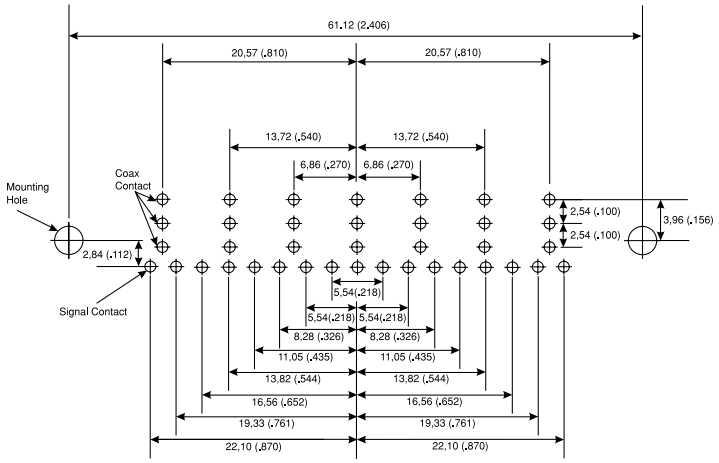

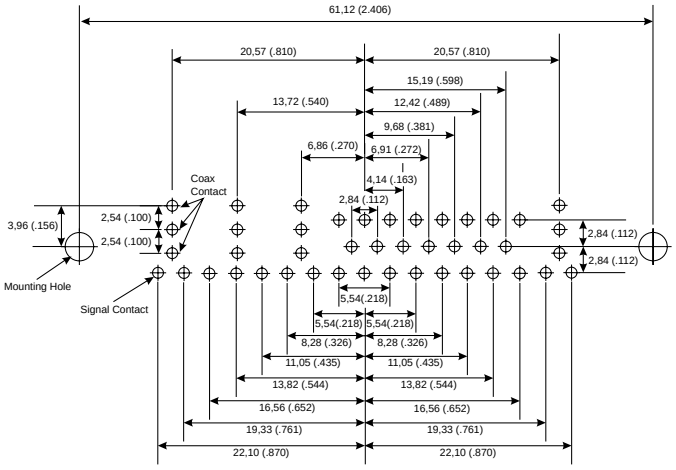

Shell Size	D	D
Contact Arrangement	24W7	36W4
No. of Size 20 Cavities	17 #20	32 #20
No. of Size 8 Cavities	7 #8	4 #8

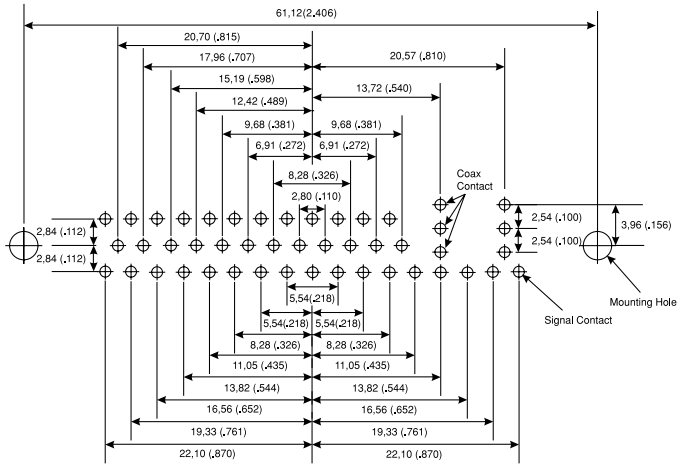

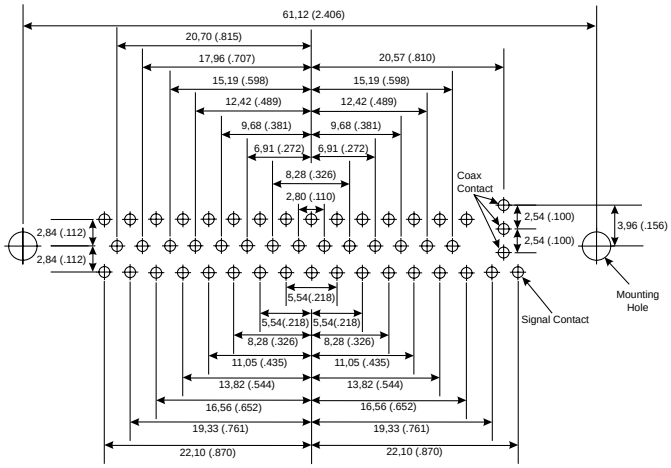

Shell Size	D	D
Contact Arrangement	43W2	47W1
No. of Size 20 Cavities	41 #20	46 #20
No. of Size 8 Cavities	2 #8	1 #8

Signal Contact Ø	Recommended PCB Hole Ø
0,60 (.024)	1,00 (.039)
0,76 (.030)	1,14 (.045)

Mounting Type	Recommended PCB Hole Ø
Without Boardlock	3,05 (.120)
With Boardlock	3,10 (.122)

Size 8 Contact Type	Recommended PCB Hole Ø
Coaxial (C or X)	1,14 (.045)

Dimensions are shown in mm (inch)
Dimensions subject to change

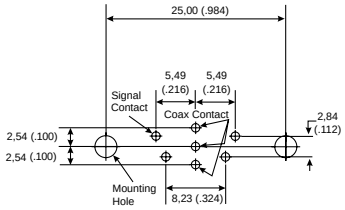

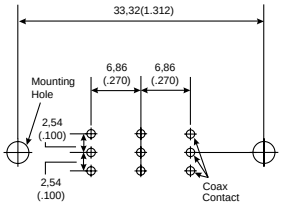

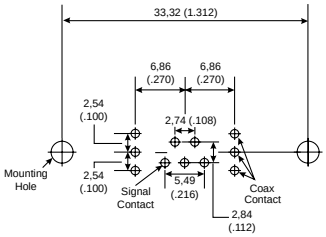

Shell Size	E	A	A
Contact Arrangement	5W1	3W3	7W2
No. of Size 20 Cavities	4 #20	0 #20	5 #20
No. of Size 8 Cavities	1 #8	3 #8	2 #8

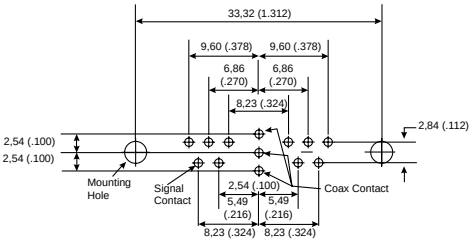

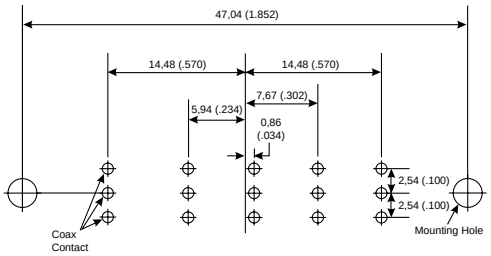

Shell Size	A	B
Contact Arrangement	11W1	5W5
No. of Size 20 Cavities	10 #20	0 #20
No. of Size 8 Cavities	1 #8	5 #8

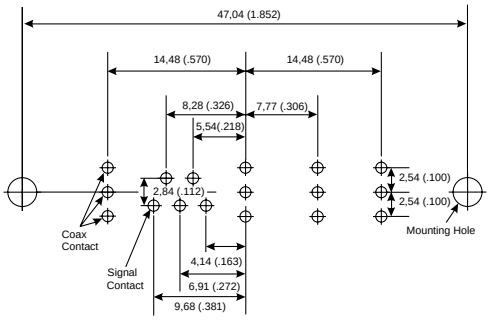

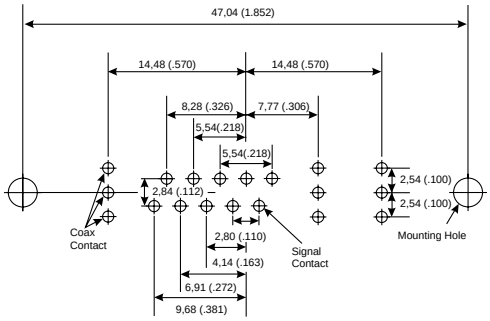

Shell Size	B	B
Contact Arrangement	9W4	13W3
No. of Size 20 Cavities	5 #20	10 #20
No. of Size 8 Cavities	4 #8	3 #8

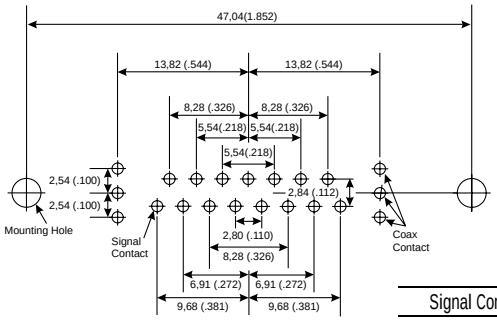

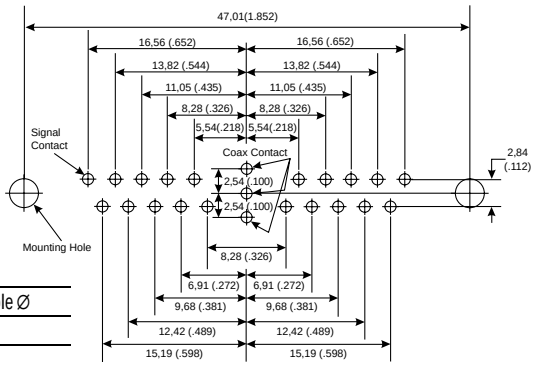

Shell Size	B	B
Contact Arrangement	17W2	21W1
No. of Size 20 Cavities	15 #20	20 #20
No. of Size 8 Cavities	2 #8	1 #8

Signal Contact Ø	Recommended PCB Hole Ø
0,60 (.024)	1,00 (.039)
0,76 (.030)	1,14 (.045)

Mounting Type	Recommended PCB Hole Ø
Without Boardlock	3,05 (.120)
With Boardlock	3,10 (.122)

Size 8 Contact Type	Recommended PCB Hole Ø
Coaxial (C or X)	1,14 (.045)

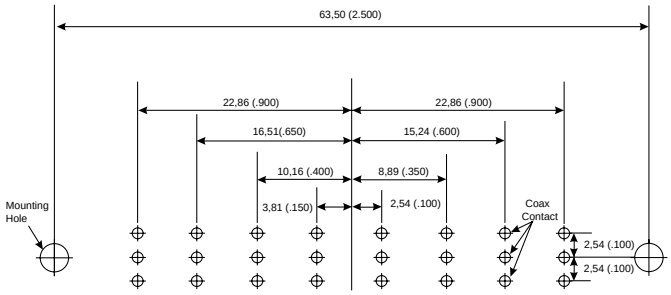

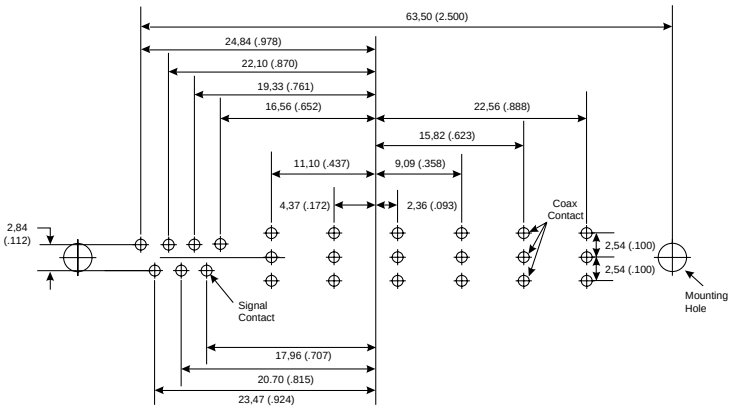

Shell Size	C	C
Contact Arrangement	8W8	13W6
No. of Size 20 Cavities	0 #20	7 #20
No. of Size 8 Cavities	8 #8	6 #8

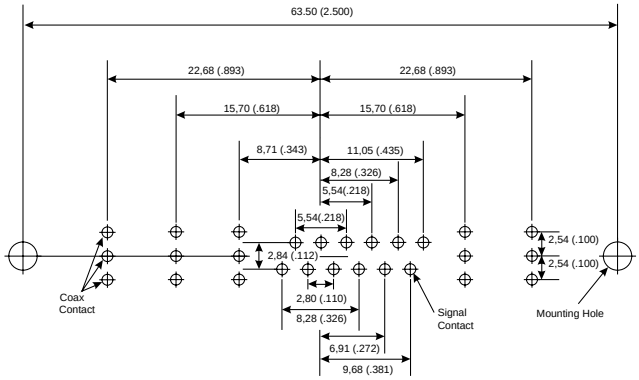

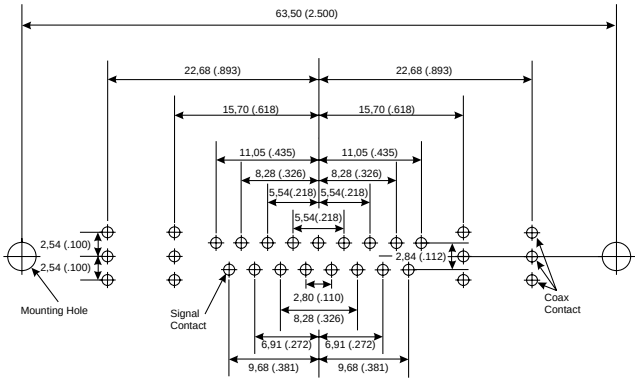

Shell Size	C	C
Contact Arrangement	17W5	21WA4
No. of Size 20 Cavities	12 #20	17 #20
No. of Size 8 Cavities	5 #8	4 #8

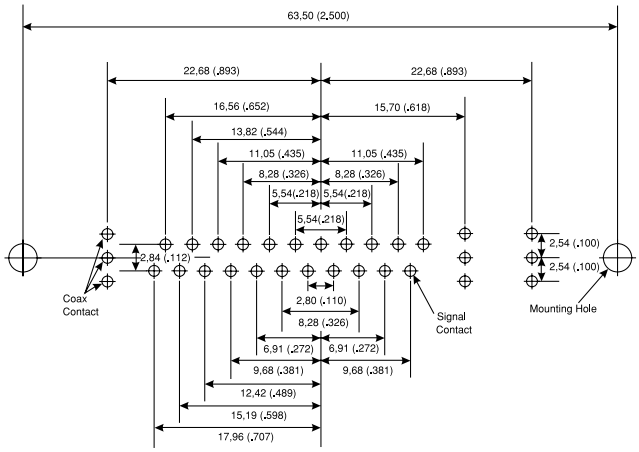

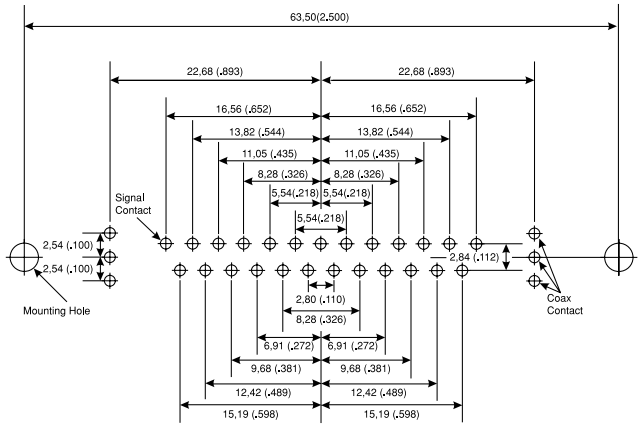

Shell Size	C	C
Contact Arrangement	25W3	27W2
No. of Size 20 Cavities	22 #20	25 #20
No. of Size 8 Cavities	3 #8	2 #8

Signal Contact Ø	Recommended PCB Hole Ø
0,60 (.024)	1,00 (.039)
0,76 (.030)	1,14 (.045)

Mounting Type	Recommended PCB Hole Ø
Without Boardlock	3,05 (.120)
With Boardlock	3,10 (.122)

Size 8 Contact Type	Recommended PCB Hole Ø
Coaxial (C or X)	1,14 (.045)

Dimensions are shown in mm (inch)
Dimensions subject to change

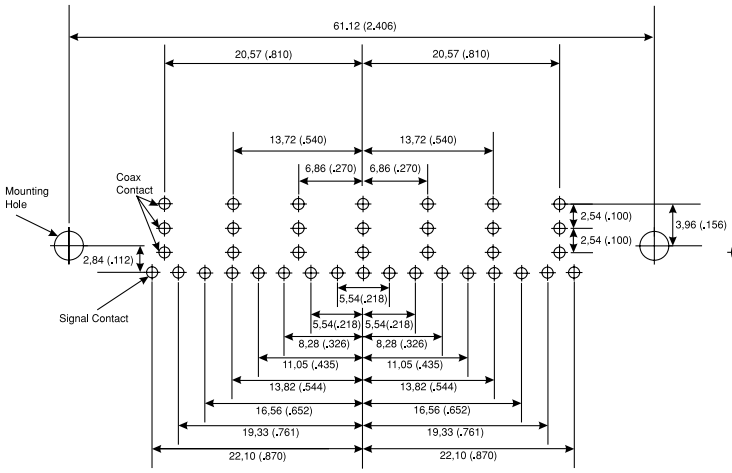

Shell Size	D
Contact Arrangement	24W7
No. of Size 20 Cavities	17 #20
No. of Size 8 Cavities	7 #8

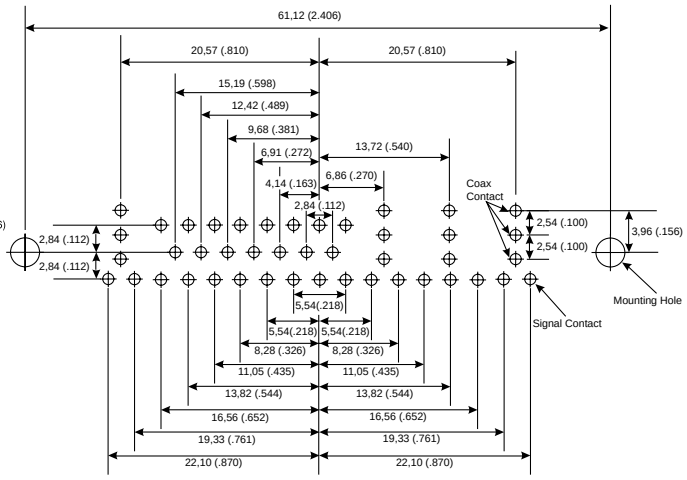

D	
36W4	
32 #20	
4 #8	

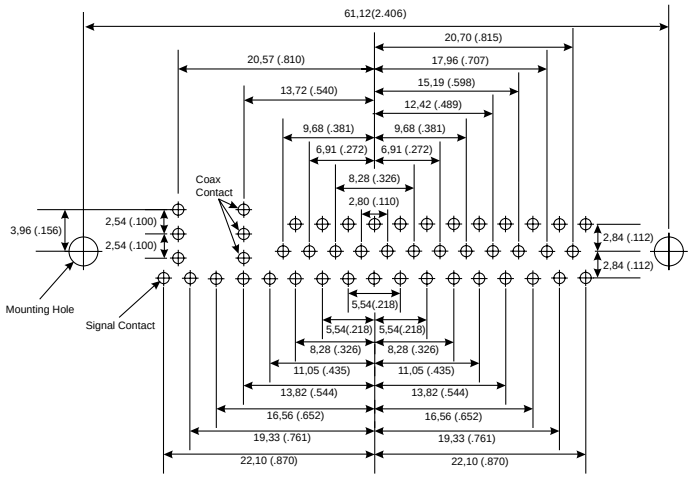

Shell Size	D
Contact Arrangement	43W2
No. of Size 20 Cavities	41 #20
No. of Size 8 Cavities	2 #8

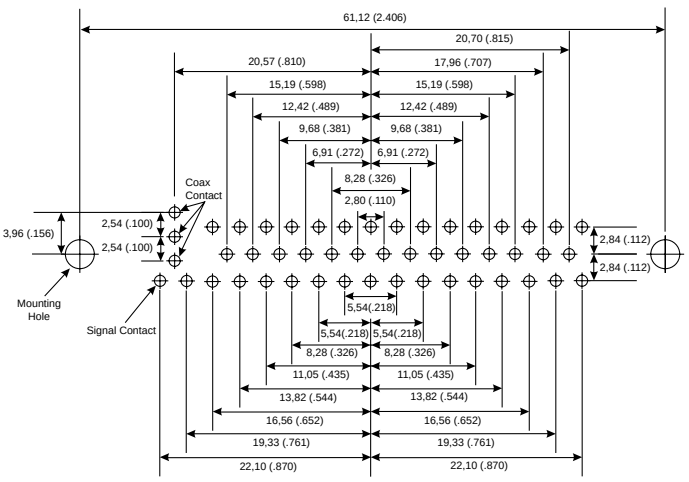

D	
47W1	
46 #20	
1 #8	

Signal Contact Ø	Recommended PCB Hole Ø
0,60 (.024)	1,00 (.039)
0,76 (.030)	1,14 (.045)

Mounting Type	Recommended PCB Hole Ø
Without Boardlock	3,05 (.120)
With Boardlock	3,10 (.122)

Size 8 Contact Type	Recommended PCB Hole Ø
Coaxial (C or X)	1,14 (.045)

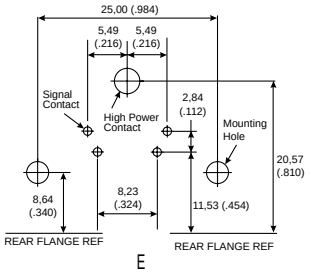

Shell Size	E
Contact Arrangement	5W1
No. of Size 20 Cavities	4 #20
No. of Size 8 Cavities	1 #8

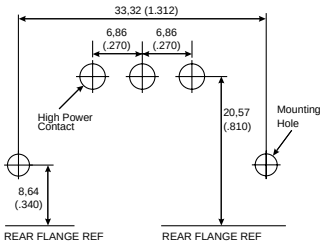

Shell Size	A
Contact Arrangement	3W3
No. of Size 20 Cavities	0 #20
No. of Size 8 Cavities	3 #8

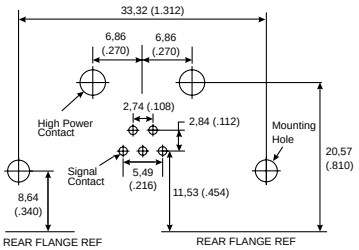

Shell Size	A
Contact Arrangement	7W2
No. of Size 20 Cavities	5 #20
No. of Size 8 Cavities	2 #8

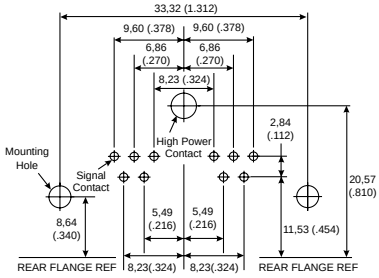

Shell Size	A
Contact Arrangement	11W1
No. of Size 20 Cavities	10 #20
No. of Size 8 Cavities	1 #8

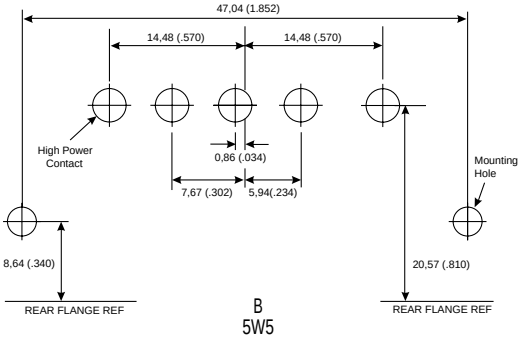

Shell Size	B
Contact Arrangement	5W5
No. of Size 20 Cavities	0 #20
No. of Size 8 Cavities	5 #8

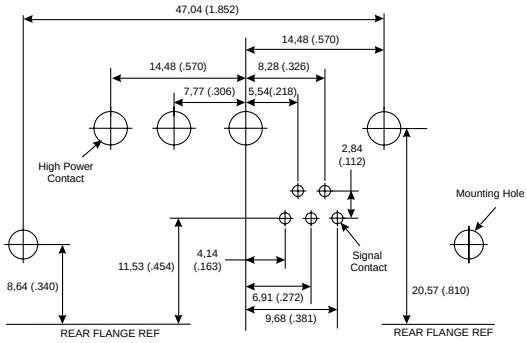

Shell Size	B
Contact Arrangement	9W4
No. of Size 20 Cavities	5 #20
No. of Size 8 Cavities	4 #8

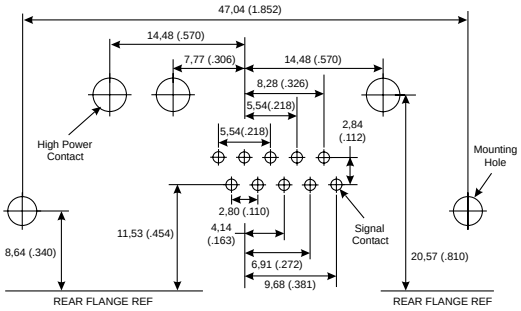

Shell Size	B
Contact Arrangement	13W3
No. of Size 20 Cavities	10 #20
No. of Size 8 Cavities	3 #8

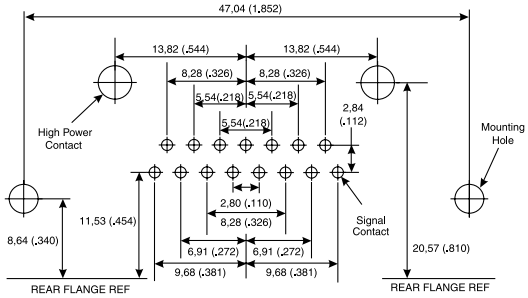

Shell Size	B
Contact Arrangement	17W2
No. of Size 20 Cavities	15 #20
No. of Size 8 Cavities	2 #8

Signal Contact Ø	Recommended PCB Hole Ø
0,76 (.030)	1,14 (.045)

Mounting Type	Recommended PCB Hole Ø
Without Boardlock	3,05 (.120)
With Boardlock	3,10 (.122)

Size 8 Contact Type	Recommended PCB Hole Ø
High Power (H)	3,56 (.140)

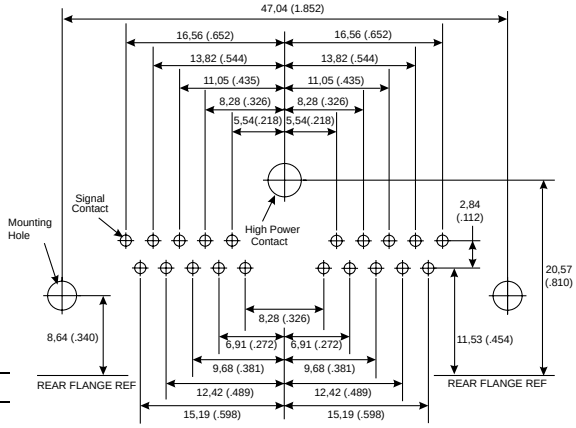

Shell Size	B
Contact Arrangement	21W1
No. of Size 20 Cavities	20 #20
No. of Size 8 Cavities	1 #8

Dimensions are shown in mm (inch)
Dimensions subject to change

High Power 90° — Plug

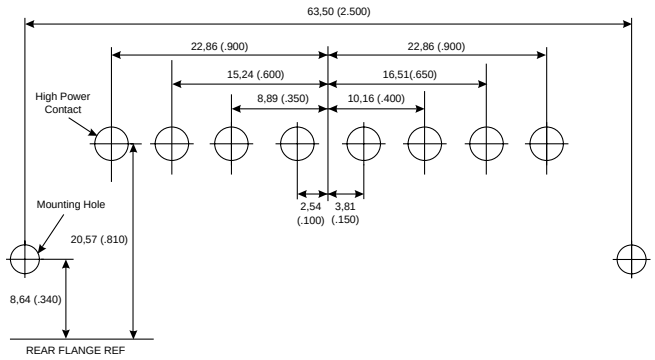

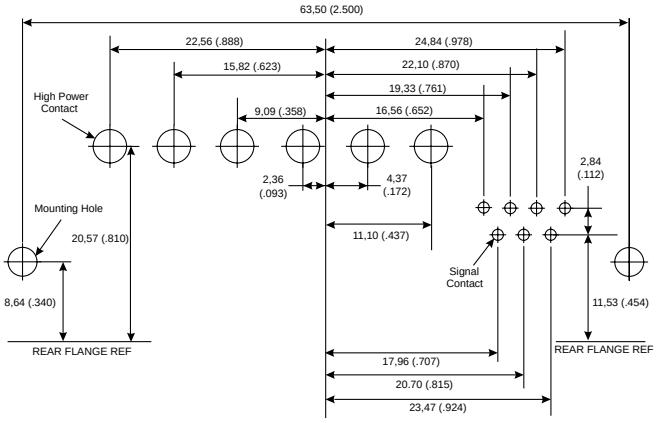

Shell Size	C	C
Contact Arrangement	8W8	13W6
No. of Size 20 Cavities	0 #20	7 #20
No. of Size 8 Cavities	8 #8	6 #8

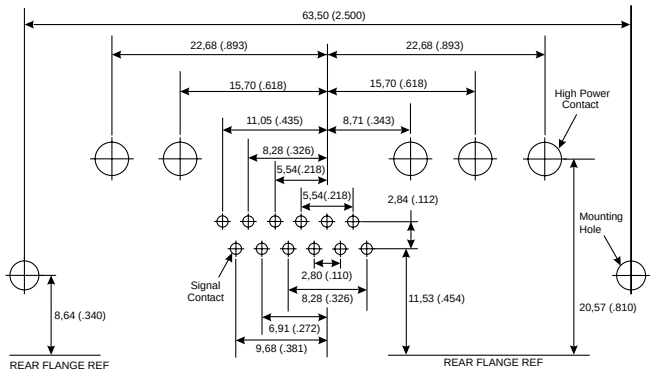

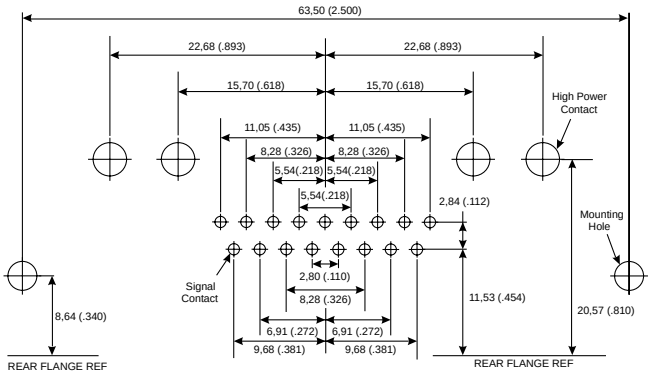

Shell Size	C	C
Contact Arrangement	17W5	21WA4
No. of Size 20 Cavities	12 #20	17 #20
No. of Size 8 Cavities	5 #8	4 #8

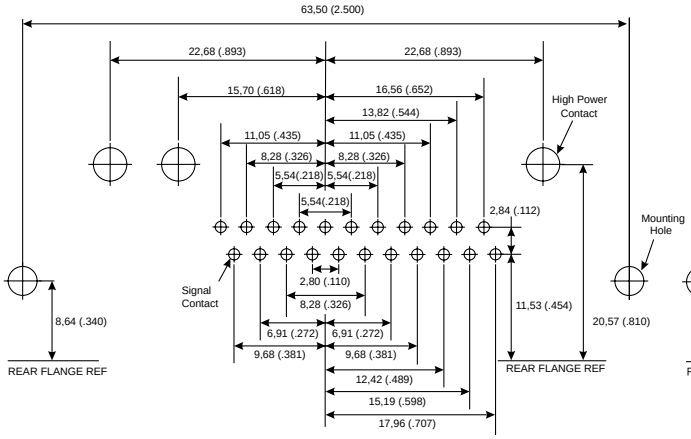

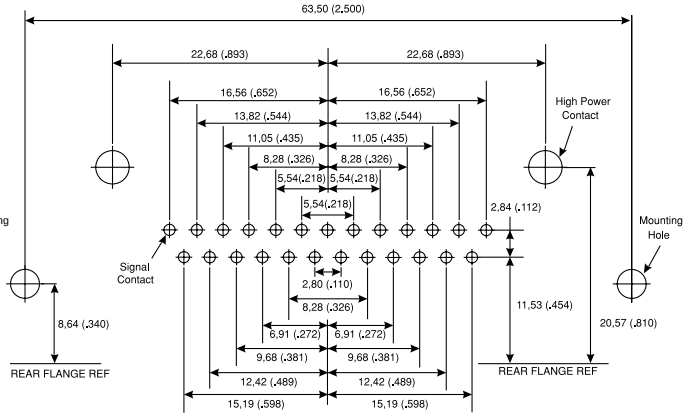

Shell Size	C	C
Contact Arrangement	25W3	27W2
No. of Size 20 Cavities	22 #20	25 #20
No. of Size 8 Cavities	3 #8	2 #8

Signal Contact Ø	Recommended PCB Hole Ø
0,76 (.030)	1,14 (.045)

Mounting Type	Recommended PCB Hole Ø
Without Boardlock	3,05 (.120)
With Boardlock	3,10 (.122)

Size 8 Contact Type	Recommended PCB Hole Ø
High Power (H)	3,56 (.140)

High Power 90° — Plug

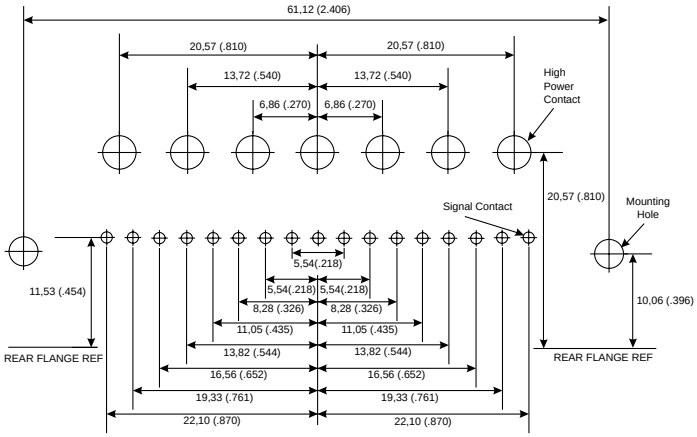

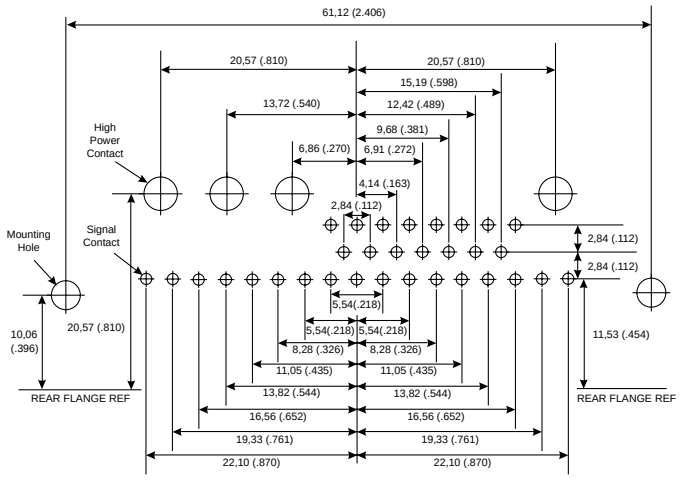

Shell Size	D	D
Contact Arrangement	24W7	36W4
No. of Size 20 Cavities	17 #20	32 #20
No. of Size 8 Cavities	7 #8	4 #8

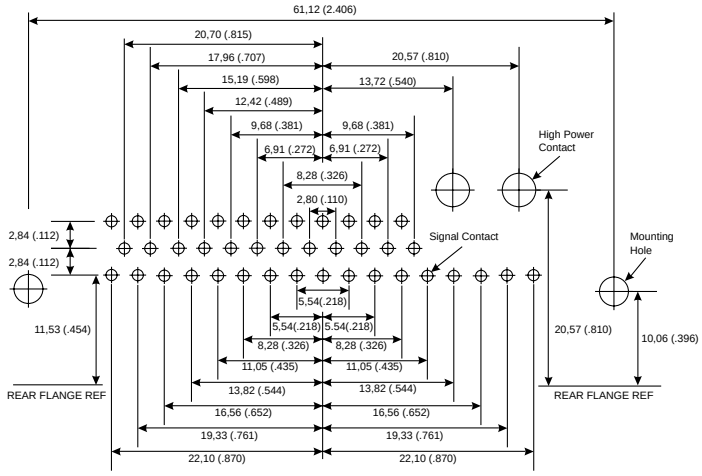

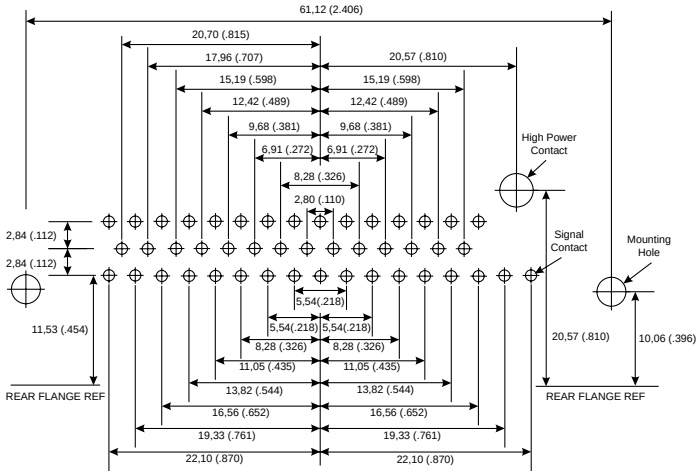

Shell Size	D	D
Contact Arrangement	43W2	47W1
No. of Size 20 Cavities	41 #20	46 #20
No. of Size 8 Cavities	2 #8	1 #8

Signal Contact Ø	Recommended PCB Hole Ø
0,76 (.030)	1,14 (.045)

Mounting Type	Recommended PCB Hole Ø
Without Boardlock	3,05 (.120)
With Boardlock	3,10 (.122)

Size 8 Contact Type	Recommended PCB Hole Ø
High Power (H)	3,56 (.140)

Dimensions are shown in mm (inch)
Dimensions subject to change

High Power 90° — Receptacle

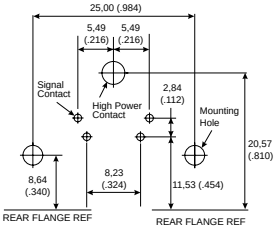

Shell Size	E
Contact Arrangement	5W1
No. of Size 20 Cavities	4 #20
No. of Size 8 Cavities	1 #8

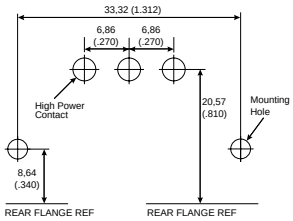

Shell Size	A
Contact Arrangement	3W3
No. of Size 20 Cavities	0 #20
No. of Size 8 Cavities	3 #8

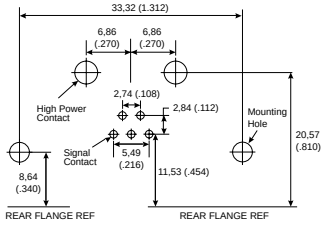

Shell Size	A
Contact Arrangement	7W2
No. of Size 20 Cavities	5 #20
No. of Size 8 Cavities	2 #8

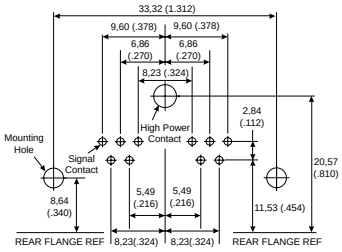

Shell Size	A
Contact Arrangement	11W1
No. of Size 20 Cavities	10 #20
No. of Size 8 Cavities	1 #8

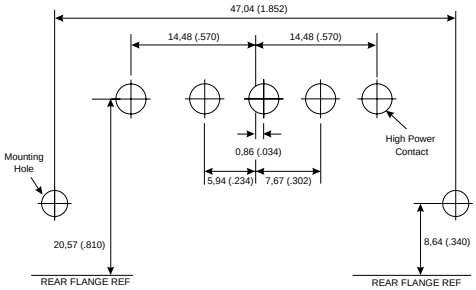

Shell Size	B
Contact Arrangement	5W5
No. of Size 20 Cavities	0 #20
No. of Size 8 Cavities	5 #8

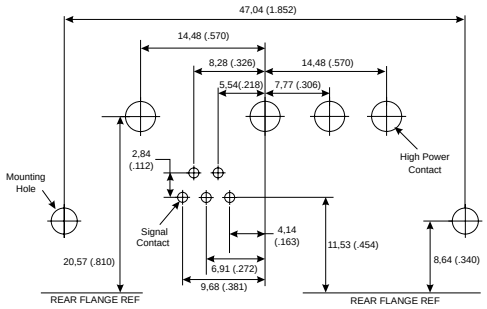

Shell Size	B
Contact Arrangement	9W4
No. of Size 20 Cavities	5 #20
No. of Size 8 Cavities	4 #8

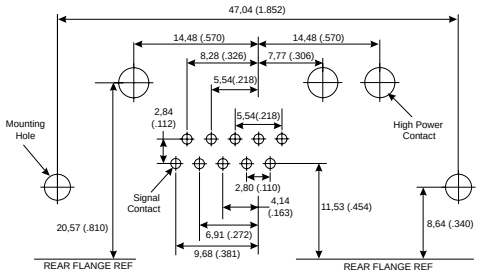

Shell Size	B
Contact Arrangement	13W3
No. of Size 20 Cavities	10 #20
No. of Size 8 Cavities	3 #8

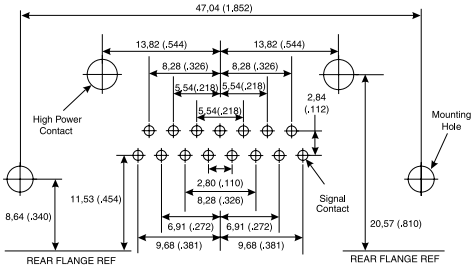

Shell Size	B
Contact Arrangement	17W2
No. of Size 20 Cavities	15 #20
No. of Size 8 Cavities	2 #8

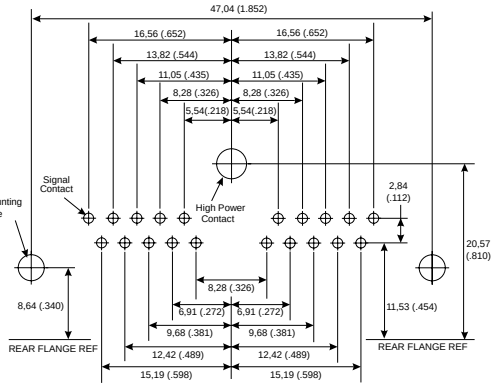

Shell Size	B
Contact Arrangement	21W1
No. of Size 20 Cavities	20 #20
No. of Size 8 Cavities	1 #8

Signal Contact Ø	Recommended PCB Hole Ø
0,76 (.030)	1,14 (.045)

Mounting Type	Recommended PCB Hole Ø
Without Boardlock	3,05 (.120)
With Boardlock	3,10 (.122)

Size 8 Contact Type	Recommended PCB Hole Ø
High Power (H)	3,56 (.140)

PCB Hole Pattern — Standard

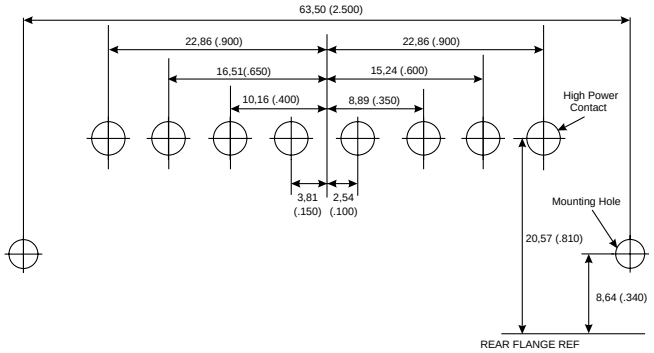

Shell Size	C
Contact Arrangement	8W8
No. of Size 20 Cavities	0 #20
No. of Size 8 Cavities	8 #8

High Power 90° — Receptacle

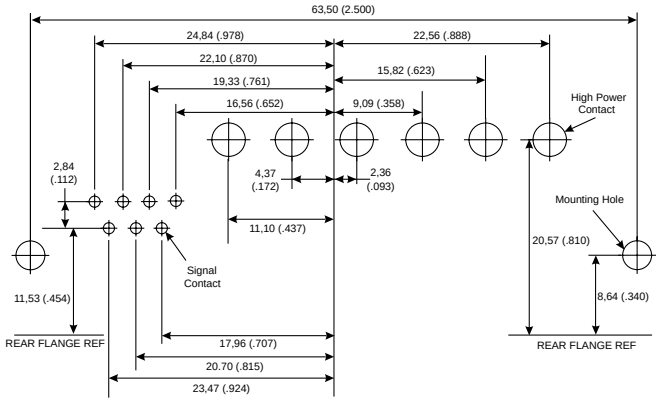

Shell Size	C
Contact Arrangement	13W6
No. of Size 20 Cavities	7 #20
No. of Size 8 Cavities	6 #8

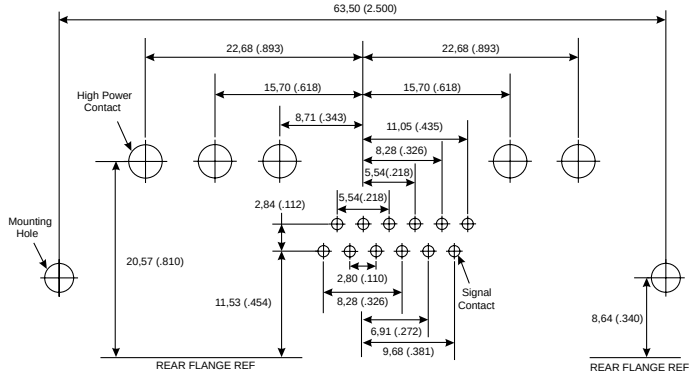

Shell Size	C
Contact Arrangement	17W5
No. of Size 20 Cavities	12 #20
No. of Size 8 Cavities	5 #8

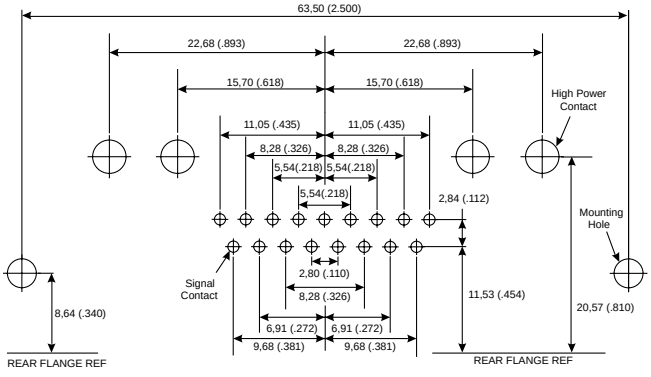

Shell Size	C
Contact Arrangement	21WA4
No. of Size 20 Cavities	17 #20
No. of Size 8 Cavities	4 #8

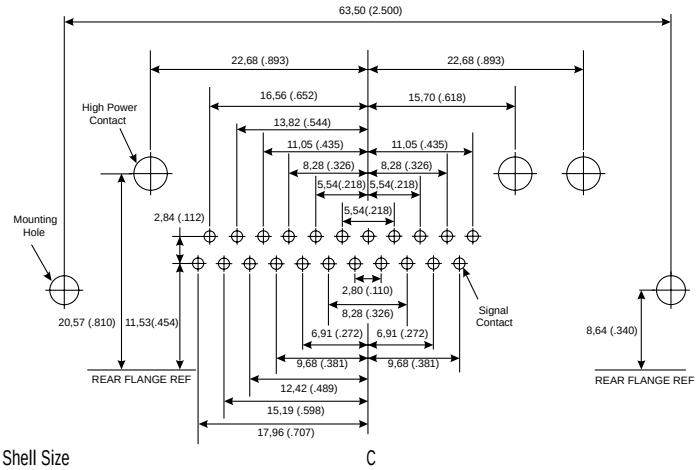

Shell Size	C
Contact Arrangement	25W3
No. of Size 20 Cavities	22 #20
No. of Size 8 Cavities	3 #8

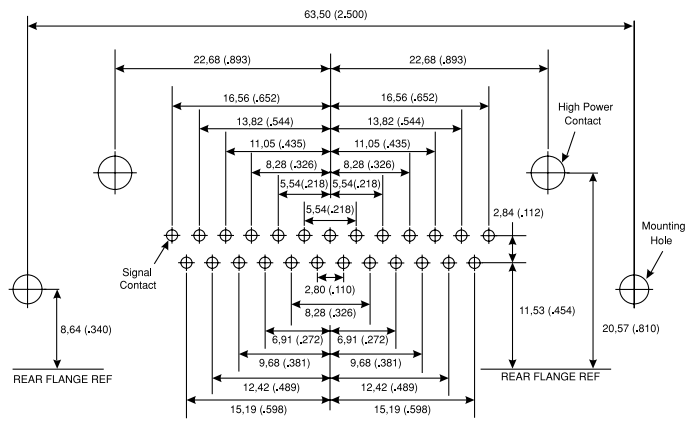

Shell Size	C
Contact Arrangement	27W2
No. of Size 20 Cavities	25 #20
No. of Size 8 Cavities	2 #8

Signal Contact Ø	Recommended PCB Hole Ø
0,76 (.030)	1,14 (.045)

Mounting Type	Recommended PCB Hole Ø
Without Boardlock	3,05 (.120)
With Boardlock	3,10 (.122)

Size 8 Contact Type	Recommended PCB Hole Ø
High Power (H)	3,56 (.140)

Dimensions are shown in mm (inch)
Dimensions subject to change

PCB Hole Pattern — Standard

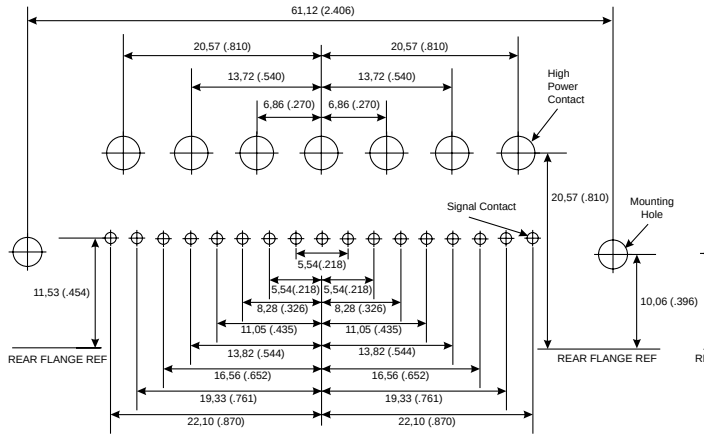

High Power 90° — Receptacle

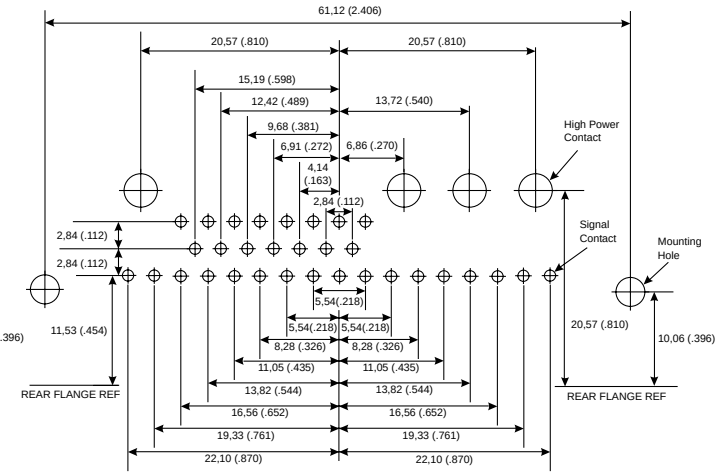

Shell Size	D	D
Contact Arrangement	24W7	36W4
No. of Size 20 Cavities	17 #20	32 #20
No. of Size 8 Cavities	7 #8	4 #8

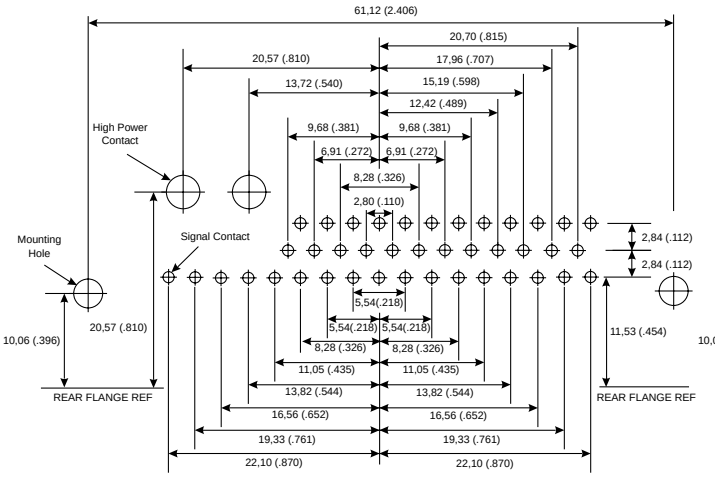

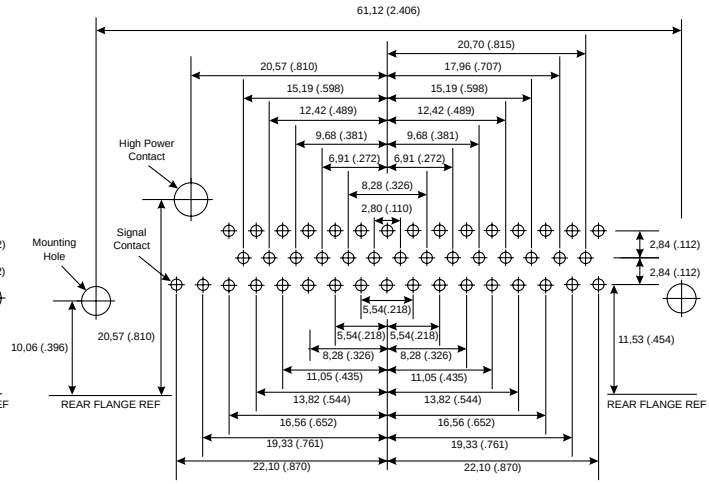

Shell Size	D	D
Contact Arrangement	43W2	47W1
No. of Size 20 Cavities	41 #20	46 #20
No. of Size 8 Cavities	2 #8	1 #8

Signal Contact Ø	Recommended PCB Hole Ø
0,76 (.030)	1,14 (.045)

Mounting Type	Recommended PCB Hole Ø
Without Boardlock	3,05 (.120)
With Boardlock	3,10 (.122)

Size 8 Contact Type	Recommended PCB Hole Ø
High Power (H)	3,56 (.140)

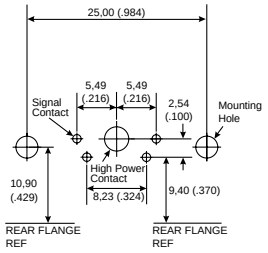

Shell Size	E
Contact Arrangement	5W1
No. of Size 20 Cavities	4 #20
No. of Size 8 Cavities	1 #8

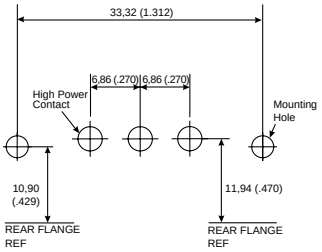

Shell Size	A
Contact Arrangement	3W3
No. of Size 20 Cavities	0 #20
No. of Size 8 Cavities	3 #8

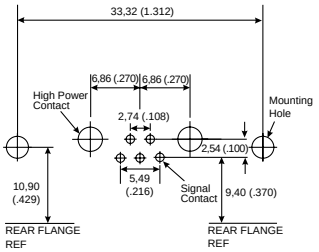

Shell Size	A
Contact Arrangement	7W2
No. of Size 20 Cavities	5 #20
No. of Size 8 Cavities	2 #8

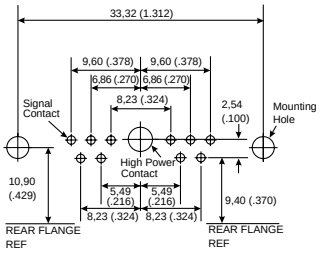

Shell Size	A
Contact Arrangement	11W1
No. of Size 20 Cavities	10 #20
No. of Size 8 Cavities	1 #8

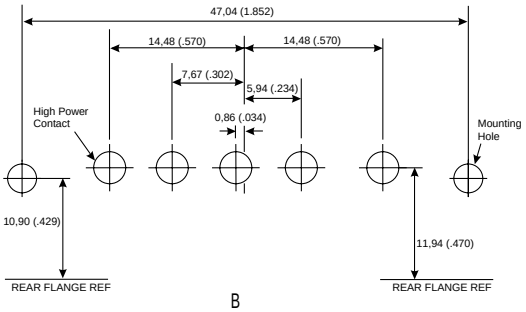

Shell Size	B
Contact Arrangement	5W5
No. of Size 20 Cavities	0 #20
No. of Size 8 Cavities	5 #8

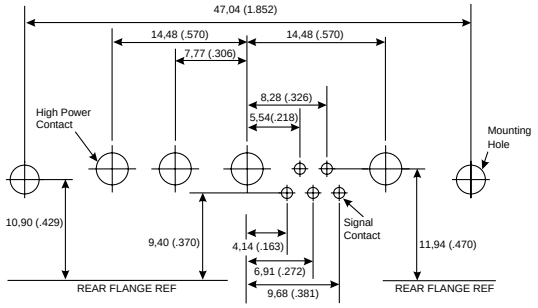

Shell Size	B
Contact Arrangement	9W4
No. of Size 20 Cavities	5 #20
No. of Size 8 Cavities	4 #8

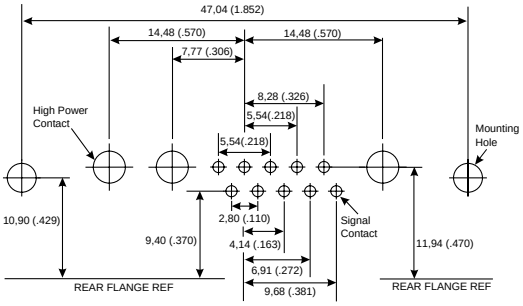

Shell Size	B
Contact Arrangement	13W3
No. of Size 20 Cavities	10 #20
No. of Size 8 Cavities	3 #8

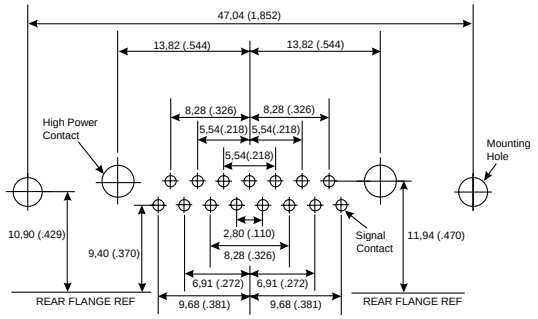

Shell Size	B
Contact Arrangement	17W2
No. of Size 20 Cavities	15 #20
No. of Size 8 Cavities	2 #8

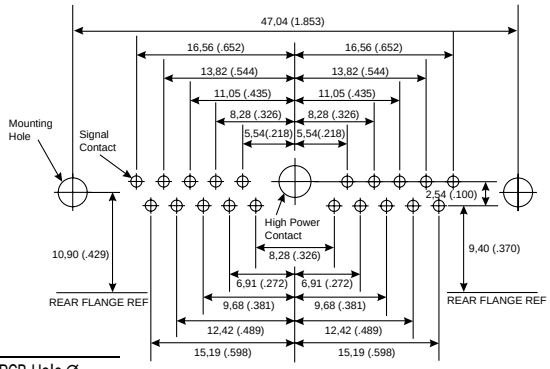

Shell Size	B
Contact Arrangement	21W1
No. of Size 20 Cavities	20 #20
No. of Size 8 Cavities	1 #8

Signal Contact Ø	Recommended PCB Hole Ø
0,60 (.024)	1,00 (.039)

Mounting Type	Recommended PCB Hole Ø
Without Boardlock	3,05 (.120)
With Boardlock	3,10 (.122)

Size 8 Contact Type	Recommended PCB Hole Ø
High Power (P)	3,28 (.129)

Dimensions are shown in mm (inch)
Dimensions subject to change

High Power 90° — Plug

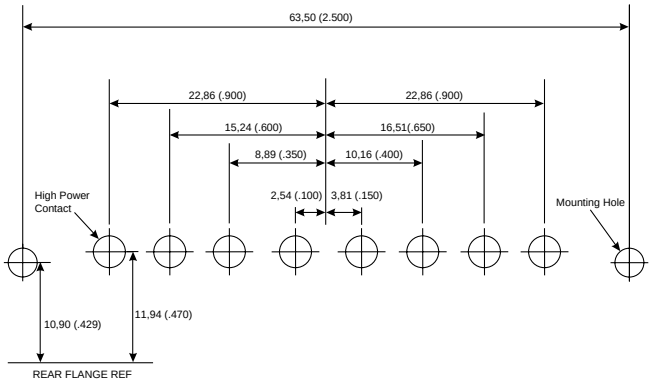

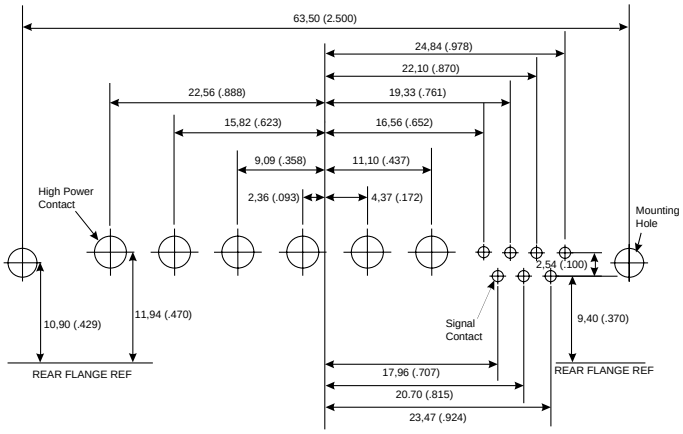

Shell Size	C	C
Contact Arrangement	8W8	13W6
No. of Size 20 Cavities	0 #20	7 #20
No. of Size 8 Cavities	8 #8	6 #8

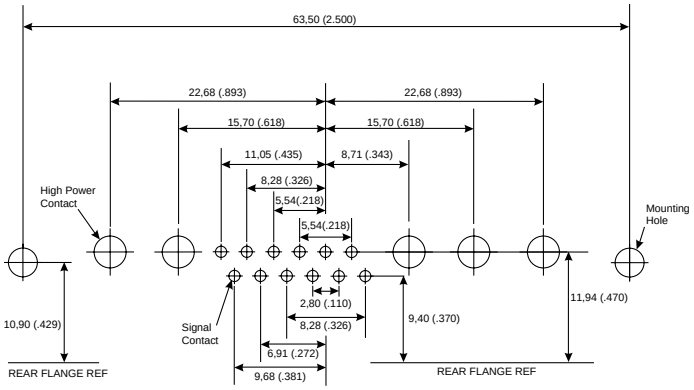

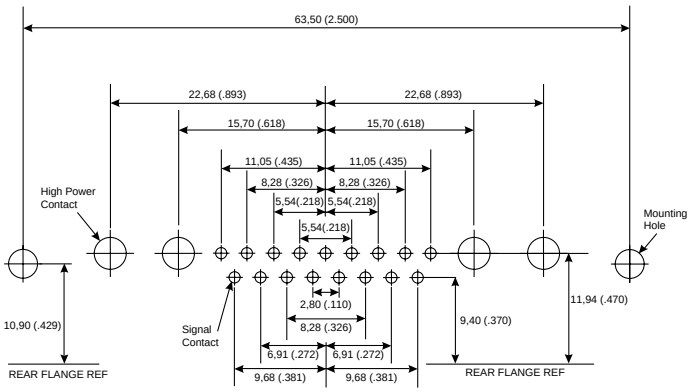

Shell Size	C	C
Contact Arrangement	17W5	21WA4
No. of Size 20 Cavities	12 #20	17 #20
No. of Size 8 Cavities	5 #8	4 #8

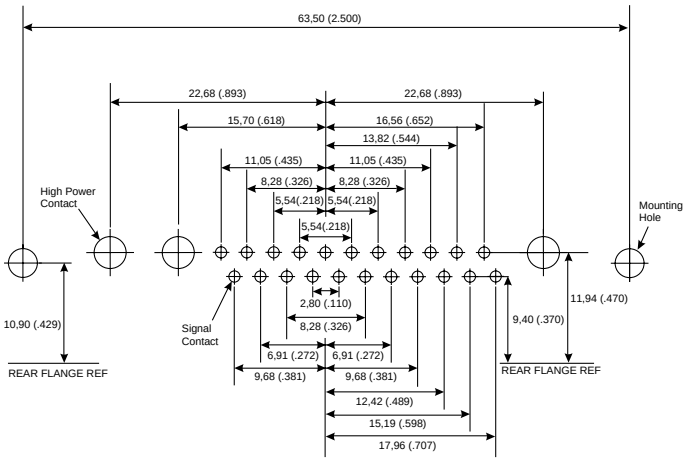

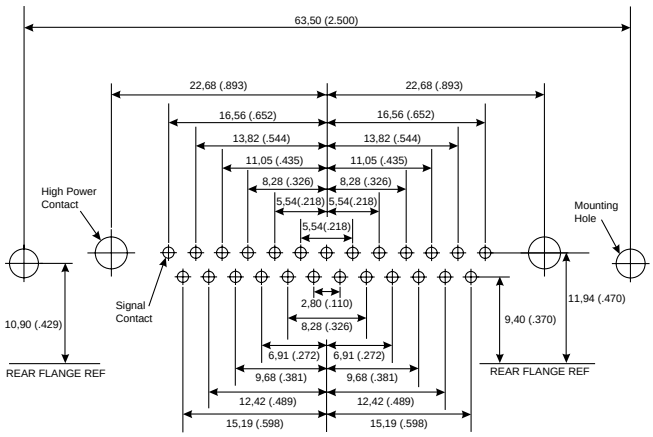

Shell Size	C	C
Contact Arrangement	25W3	27W2
No. of Size 20 Cavities	22 #20	25 #20
No. of Size 8 Cavities	3 #8	2 #8

Signal Contact Ø	Recommended PCB Hole Ø
0,60 (.024)	1,00 (.039)

Mounting Type	Recommended PCB Hole Ø
Without Boardlock	3,05 (.120)
With Boardlock	3,10 (.122)

Size 8 Contact Type	Recommended PCB Hole Ø
High Power (P)	3,28 (.129)

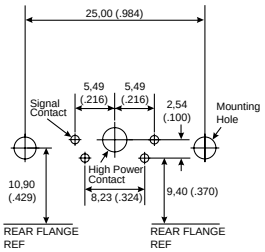

Shell Size	E
Contact Arrangement	5W1
No. of Size 20 Cavities	4 #20
No. of Size 8 Cavities	1 #8

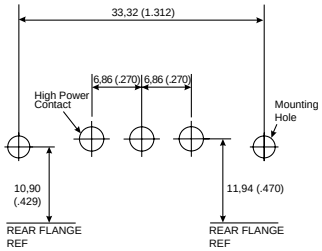

Shell Size	A
Contact Arrangement	3W3
No. of Size 20 Cavities	0 #20
No. of Size 8 Cavities	3 #8

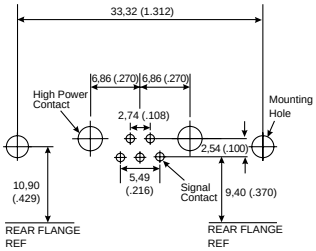

Shell Size	A
Contact Arrangement	7W2
No. of Size 20 Cavities	5 #20
No. of Size 8 Cavities	2 #8

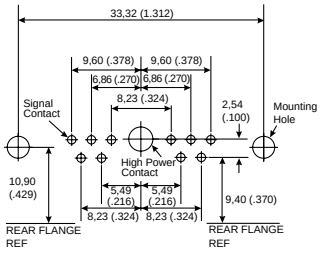

Shell Size	A
Contact Arrangement	11W1
No. of Size 20 Cavities	10 #20
No. of Size 8 Cavities	1 #8

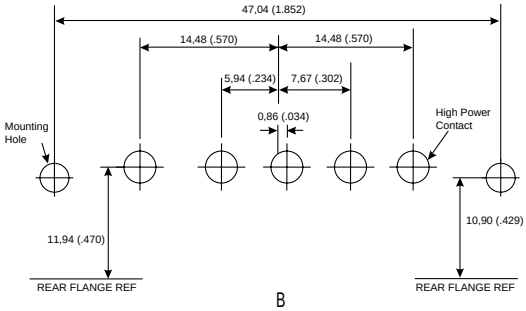

Shell Size	B
Contact Arrangement	5W5
No. of Size 20 Cavities	0 #20
No. of Size 8 Cavities	5 #8

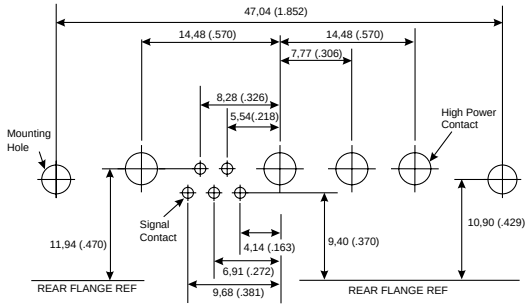

Shell Size	B
Contact Arrangement	9W4
No. of Size 20 Cavities	5 #20
No. of Size 8 Cavities	4 #8

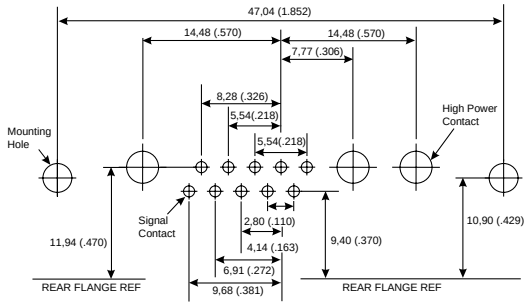

Shell Size	B
Contact Arrangement	13W3
No. of Size 20 Cavities	10 #20
No. of Size 8 Cavities	3 #8

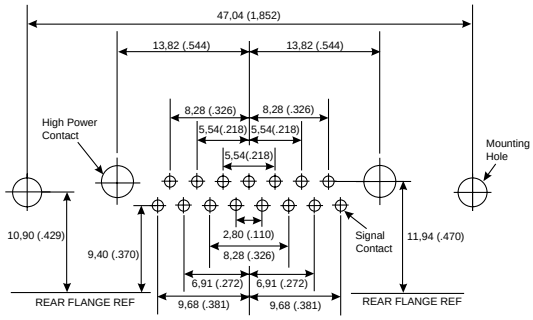

Shell Size	B
Contact Arrangement	17W2
No. of Size 20 Cavities	15 #20
No. of Size 8 Cavities	2 #8

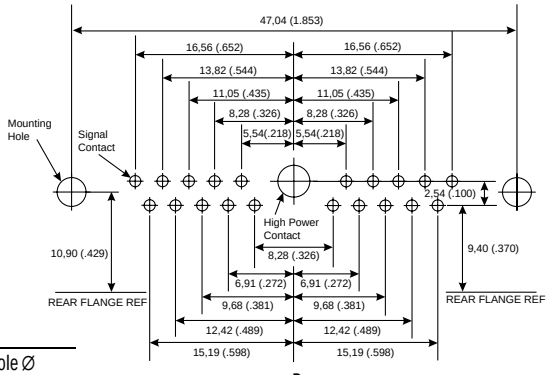

Shell Size	B
Contact Arrangement	21W1
No. of Size 20 Cavities	20 #20
No. of Size 8 Cavities	1 #8

Signal Contact Ø	Recommended PCB Hole Ø
0,60 (.024)	1,00 (.039)

Mounting Type	Recommended PCB Hole Ø
Without Boardlock	3,05 (.120)
With Boardlock	3,10 (.122)

Size 8 Contact Type	Recommended PCB Hole Ø
High Power (P)	3,28 (.129)

Dimensions are shown in mm (inch)
Dimensions subject to change

PCB Hole Pattern — European

High Power 90° — Receptacle

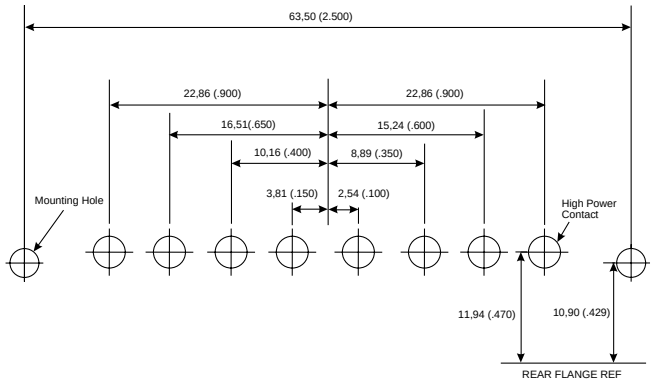

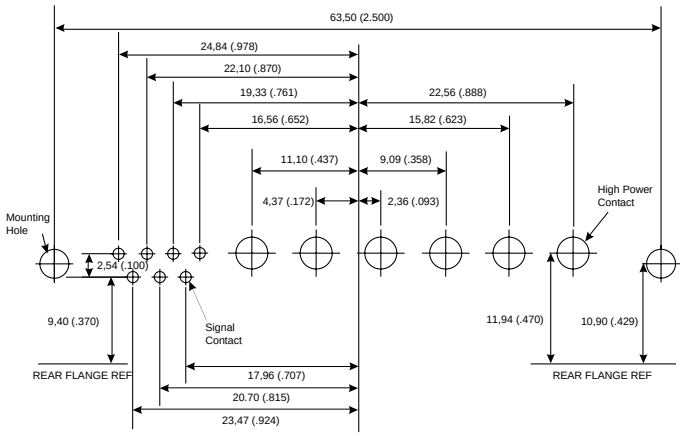

Shell Size	C	C
Contact Arrangement	8W8	13W6
No. of Size 20 Cavities	0 #20	7 #20
No. of Size 8 Cavities	8 #8	6 #8

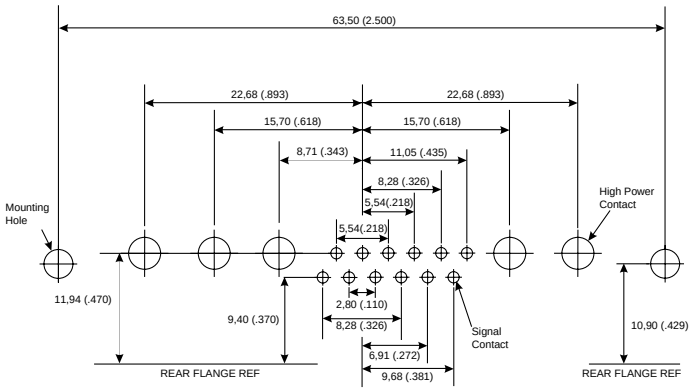

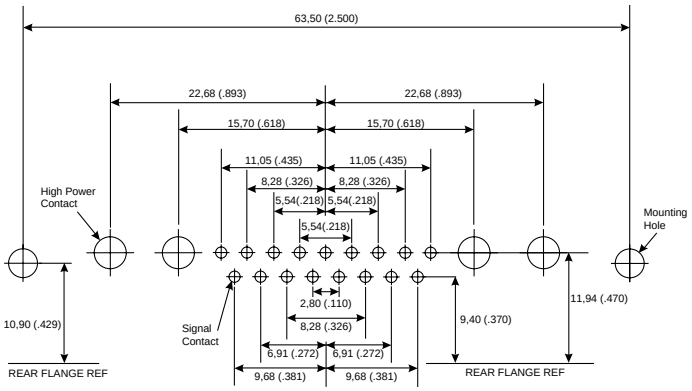

Shell Size	C	C
Contact Arrangement	17W5	21WA4
No. of Size 20 Cavities	12 #20	17 #20
No. of Size 8 Cavities	5 #8	4 #8

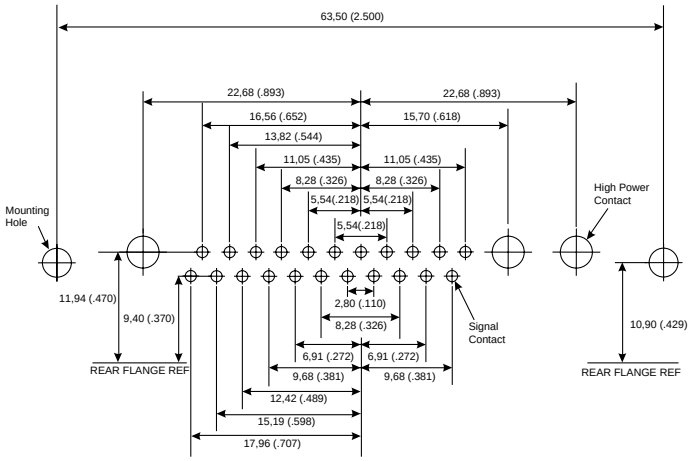

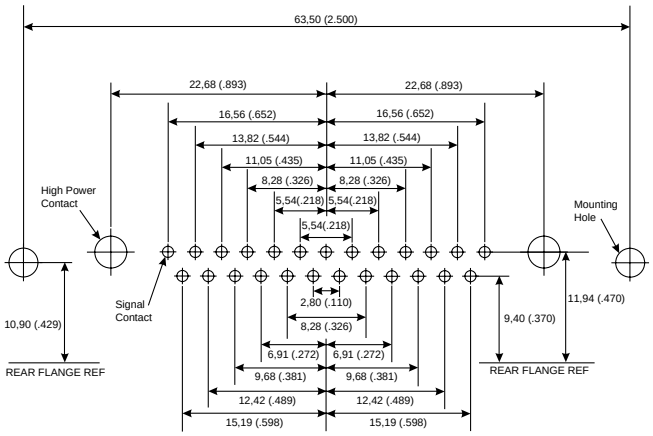

Shell Size	C	C
Contact Arrangement	25W3	27W2
No. of Size 20 Cavities	22 #20	25 #20
No. of Size 8 Cavities	3 #8	2 #8

Signal Contact Ø	Recommended PCB Hole Ø
0,60 (.024)	1,00 (.039)

Mounting Type	Recommended PCB Hole Ø
Without Boardlock	3,05 (.120)
With Boardlock	3,10 (.122)

Size 8 Contact Type	Recommended PCB Hole Ø
High Power (P)	3,28 (.129)

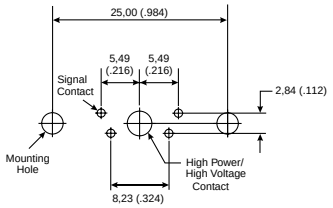

Shell Size	E
Contact Arrangement	5W1
No. of Size 20 Cavities	4 #20
No. of Size 8 Cavities	1 #8

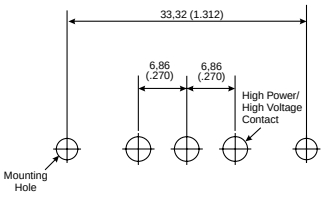

Shell Size	A
Contact Arrangement	3W3
No. of Size 20 Cavities	0 #20
No. of Size 8 Cavities	3 #8

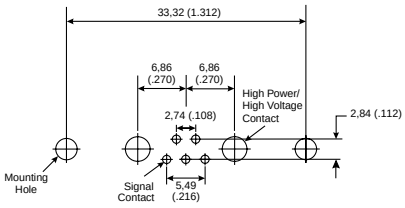

Shell Size	A
Contact Arrangement	7W2
No. of Size 20 Cavities	5 #20
No. of Size 8 Cavities	2 #8

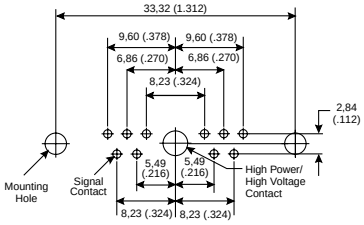

Shell Size	A
Contact Arrangement	11W1
No. of Size 20 Cavities	10 #20
No. of Size 8 Cavities	1 #8

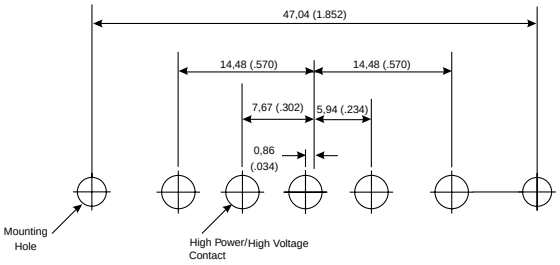

Shell Size	B
Contact Arrangement	5W5
No. of Size 20 Cavities	0 #20
No. of Size 8 Cavities	5 #8

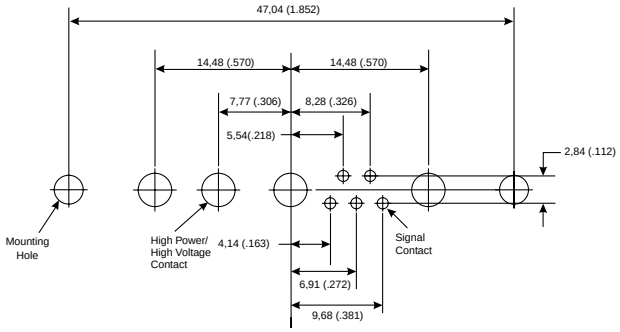

Shell Size	B
Contact Arrangement	9W4
No. of Size 20 Cavities	5 #20
No. of Size 8 Cavities	4 #8

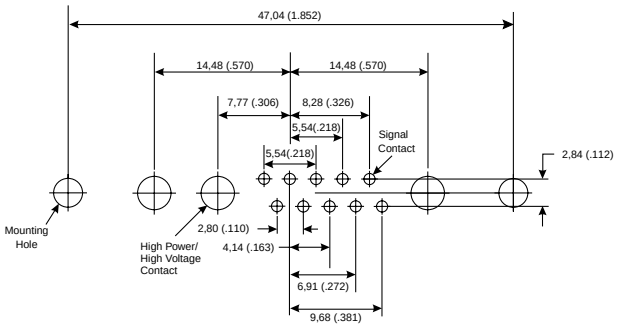

Shell Size	B
Contact Arrangement	13W3
No. of Size 20 Cavities	10 #20
No. of Size 8 Cavities	3 #8

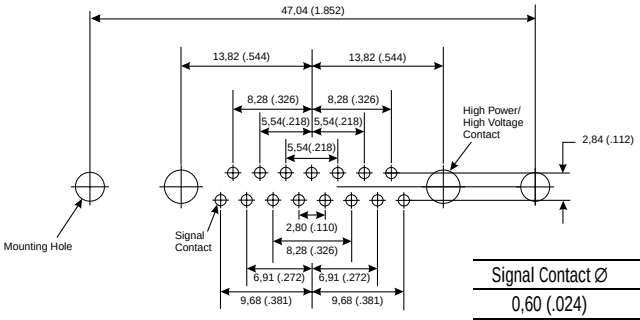

Shell Size	B
Contact Arrangement	17W2
No. of Size 20 Cavities	15 #20
No. of Size 8 Cavities	2 #8

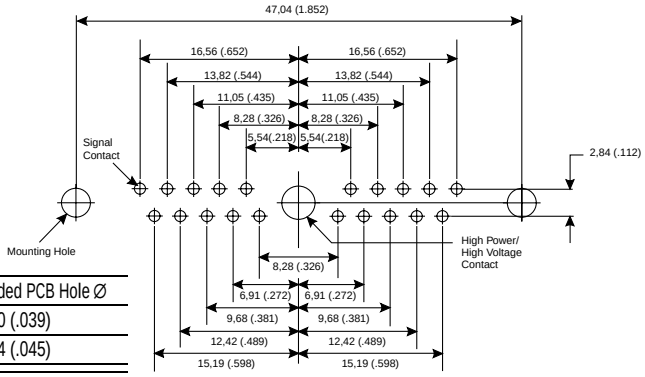

Shell Size	B
Contact Arrangement	21W1
No. of Size 20 Cavities	20 #20
No. of Size 8 Cavities	1 #8

Signal Contact Ø	Recommended PCB Hole Ø
0,60 (.024)	1,00 (.039)
0,76 (.030)	1,14 (.045)

Mounting Type	Recommended PCB Hole Ø
Without Boardlock	3,05 (.120)
With Boardlock	3,10 (.122)

Size 8 Contact Type	Recommended PCB Hole Ø
High Power (H)	3,56 (.140)
High Voltage (V)	1,96 (.077)

ITT Cannon

Dimensions are shown in mm (inch)
Dimensions subject to change

PCB Hole Pattern — Standard/European

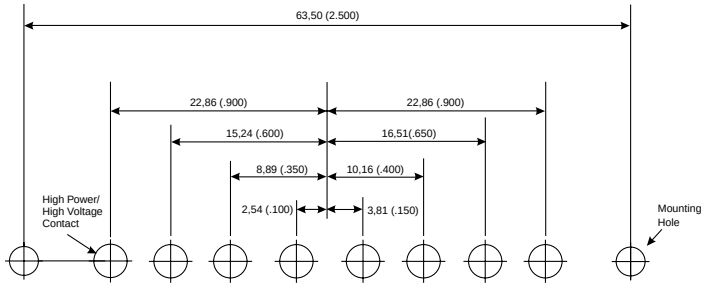

Shell Size	C
Contact Arrangement	8W8
No. of Size 20 Cavities	0 #20
No. of Size 8 Cavities	8 #8

High Power/Voltage Straight — Plug

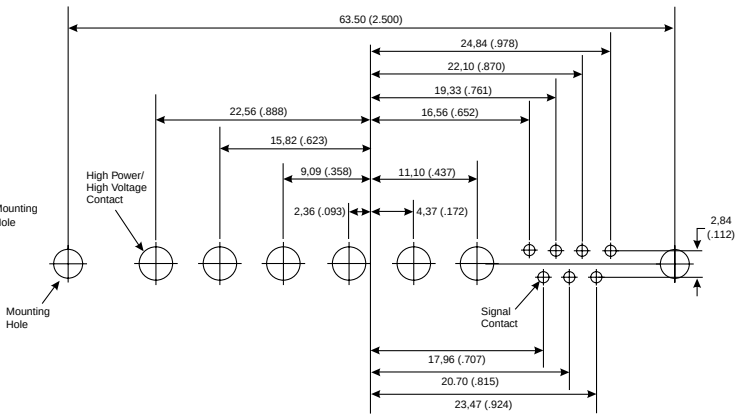

Shell Size	C
Contact Arrangement	13W6
No. of Size 20 Cavities	7 #20
No. of Size 8 Cavities	6 #8

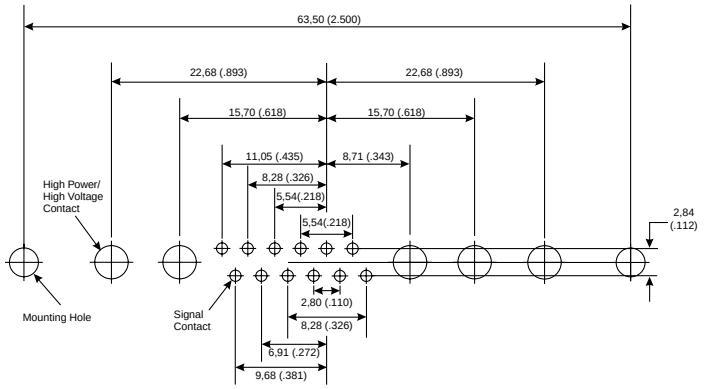

Shell Size	C
Contact Arrangement	17W5
No. of Size 20 Cavities	12 #20
No. of Size 8 Cavities	5 #8

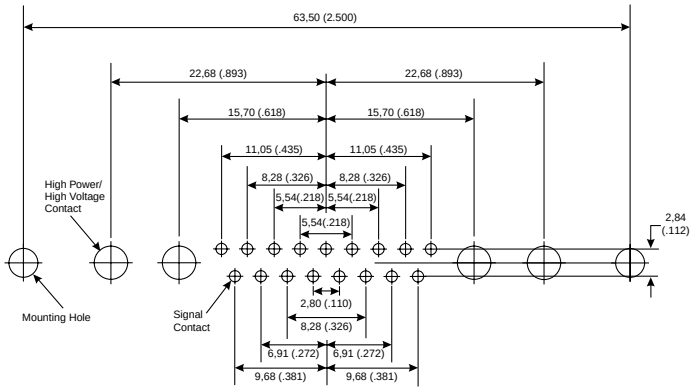

Shell Size	C
Contact Arrangement	21WA4
No. of Size 20 Cavities	17 #20
No. of Size 8 Cavities	4 #8

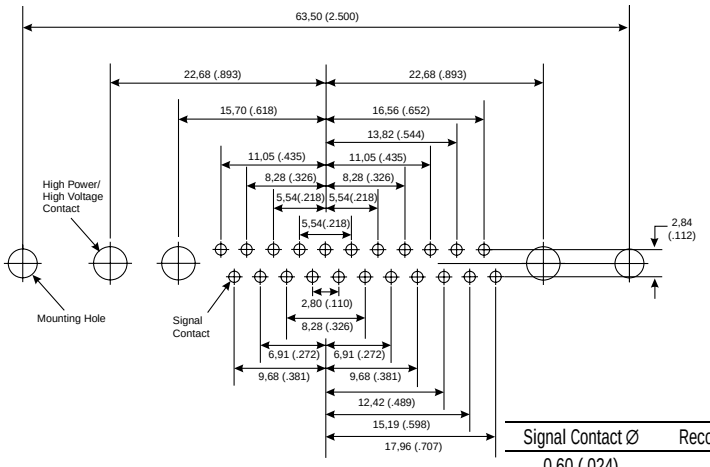

Shell Size	C
Contact Arrangement	25W3
No. of Size 20 Cavities	22 #20
No. of Size 8 Cavities	3 #8

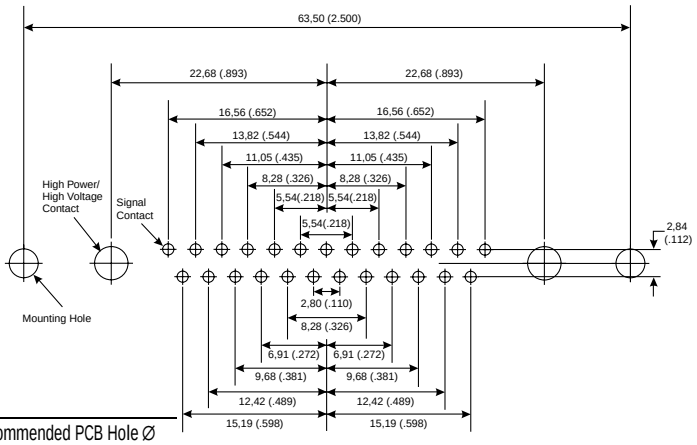

Shell Size	C
Contact Arrangement	27W2
No. of Size 20 Cavities	25 #20
No. of Size 8 Cavities	2 #8

Signal Contact Ø	Recommended PCB Hole Ø
0,60 (.024)	1,00 (.039)
0,76 (.030)	1,14 (.045)

Mounting Type	Recommended PCB Hole Ø
Without Boardlock	3,05 (.120)
With Boardlock	3,10 (.122)

Size 8 Contact Type	Recommended PCB Hole Ø
High Power (H)	3,56 (.140)
High Voltage (V)	1,96 (.077)

PCB Hole Pattern — Standard/European

High Power/Voltage Straight — Plug

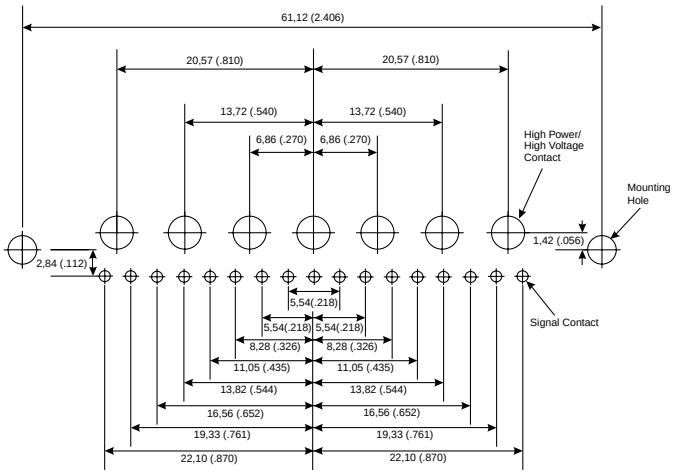

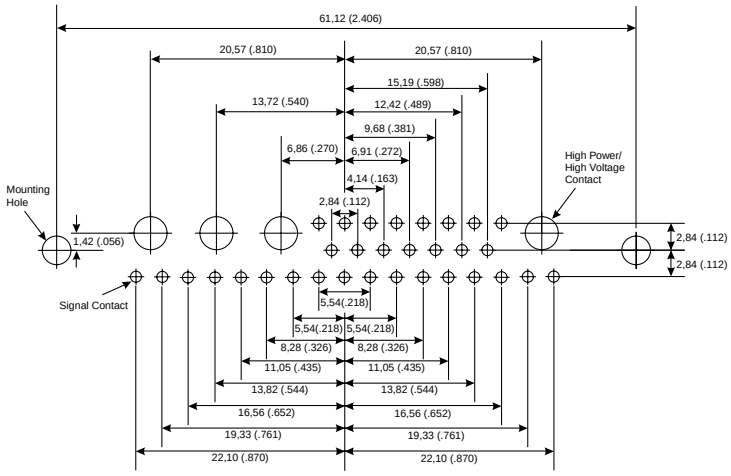

Shell Size	D	D
Contact Arrangement	24W7	36W4
No. of Size 20 Cavities	17 #20	32 #20
No. of Size 8 Cavities	7 #8	4 #8

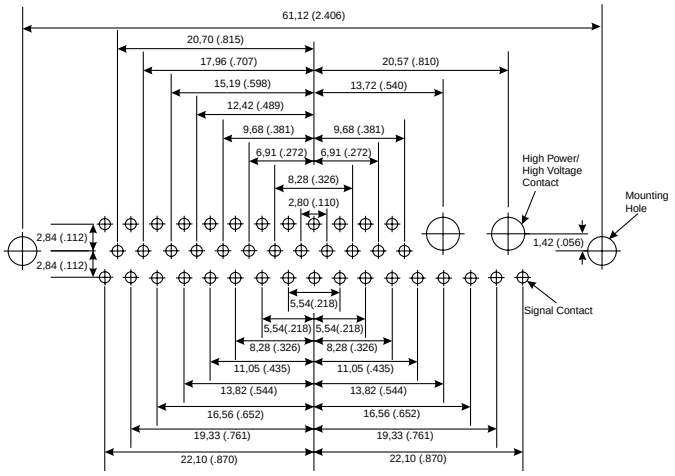

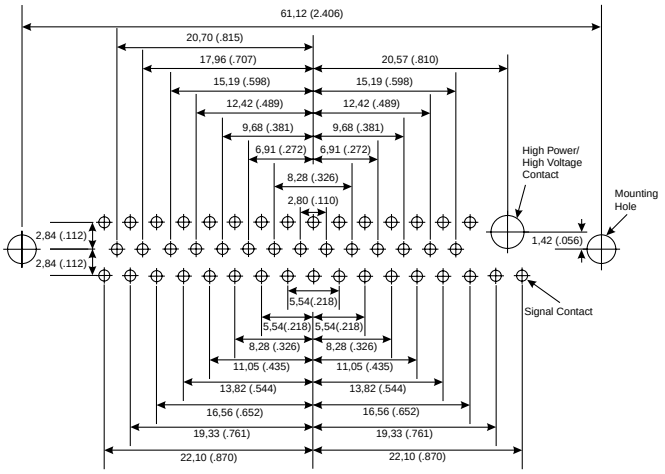

Shell Size	D	D
Contact Arrangement	43W2	47W1
No. of Size 20 Cavities	41 #20	46 #20
No. of Size 8 Cavities	2 #8	1 #8

Signal Contact Ø	Recommended PCB Hole Ø
0,60 (.024)	1,00 (.039)
0,76 (.030)	1,14 (.045)

Mounting Type	Recommended PCB Hole Ø
Without Boardlock	3,05 (.120)
With Boardlock	3,10 (.122)

Size 8 Contact Type	Recommended PCB Hole Ø
High Power (H)	3,56 (.140)
High Voltage (V)	1,96 (.077)

Dimensions are shown in mm (inch)
Dimensions subject to change

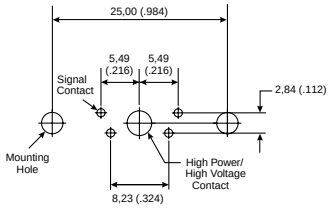

Shell Size	E
Contact Arrangement	5W1
No. of Size 20 Cavities	4 #20
No. of Size 8 Cavities	1 #8

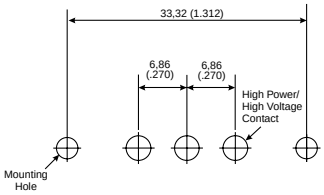

Shell Size	A
Contact Arrangement	3W3
No. of Size 20 Cavities	0 #20
No. of Size 8 Cavities	3 #8

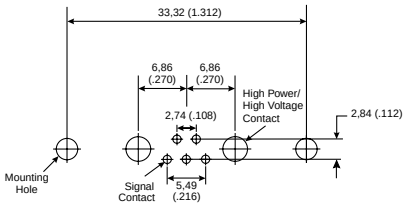

Shell Size	A
Contact Arrangement	7W2
No. of Size 20 Cavities	5 #20
No. of Size 8 Cavities	2 #8

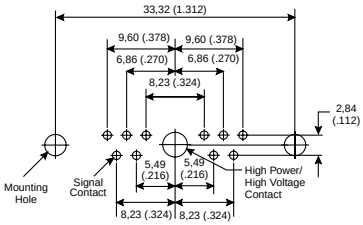

Shell Size	A
Contact Arrangement	11W1
No. of Size 20 Cavities	10 #20
No. of Size 8 Cavities	1 #8

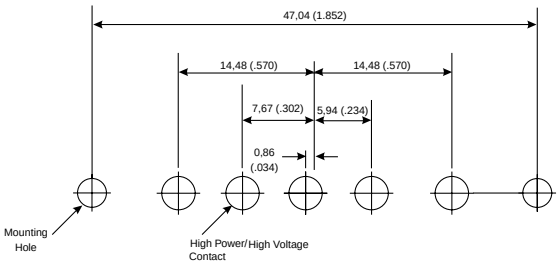

Shell Size	B
Contact Arrangement	5W5
No. of Size 20 Cavities	0 #20
No. of Size 8 Cavities	5 #8

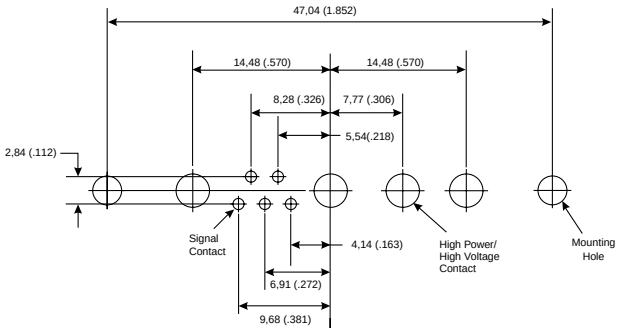

Shell Size	B
Contact Arrangement	9W4
No. of Size 20 Cavities	5 #20
No. of Size 8 Cavities	4 #8

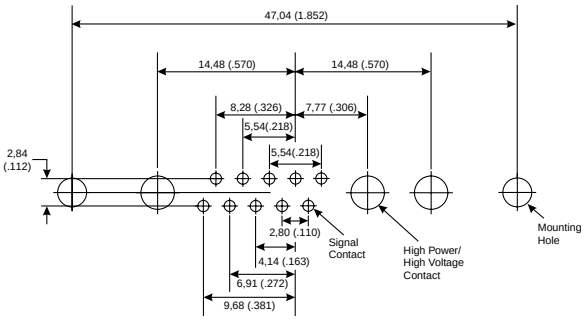

Shell Size	B
Contact Arrangement	13W3
No. of Size 20 Cavities	10 #20
No. of Size 8 Cavities	3 #8

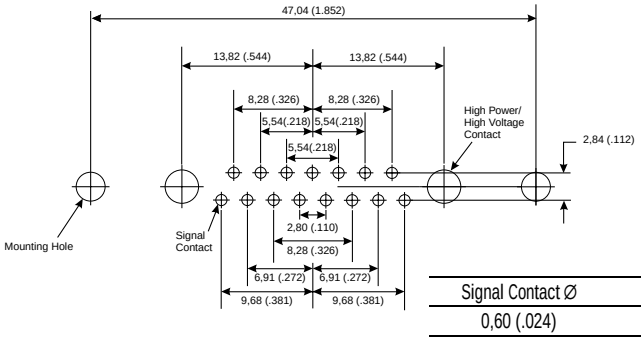

Shell Size	B
Contact Arrangement	17W2
No. of Size 20 Cavities	15 #20
No. of Size 8 Cavities	2 #8

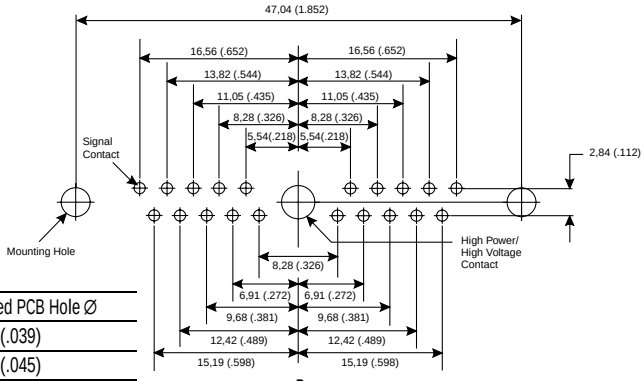

Shell Size	B
Contact Arrangement	21W1
No. of Size 20 Cavities	20 #20
No. of Size 8 Cavities	1 #8

Signal Contact Ø	Recommended PCB Hole Ø
0,60 (.024)	1,00 (.039)
0,76 (.030)	1,14 (.045)

Mounting Type	Recommended PCB Hole Ø
Without Boardlock	3,05 (.120)
With Boardlock	3,10 (.122)

Size 8 Contact Type	Recommended PCB Hole Ø
High Power (H)	3,56 (.140)
High Voltage (V)	1,96 (.077)

PCB Hole Pattern — Standard/European

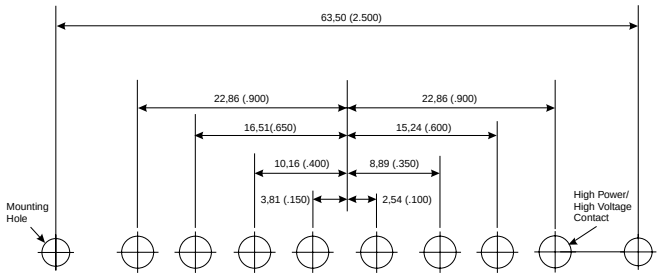

Shell Size	C
Contact Arrangement	8W8
No. of Size 20 Cavities	0 #20
No. of Size 8 Cavities	8 #8

High Power/Voltage Straight — Receptacle

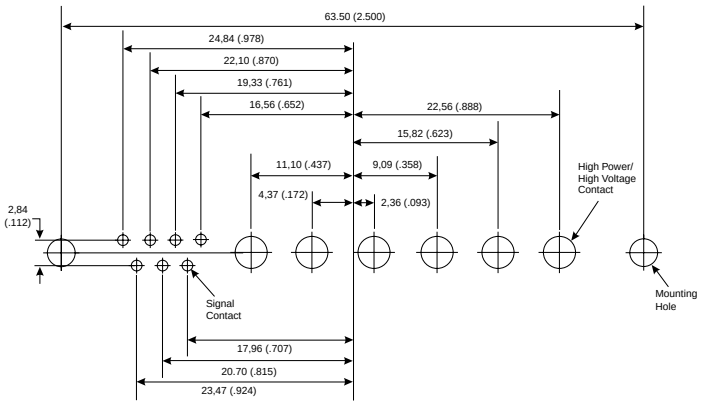

Shell Size	C
Contact Arrangement	13W6
No. of Size 20 Cavities	7 #20
No. of Size 8 Cavities	6 #8

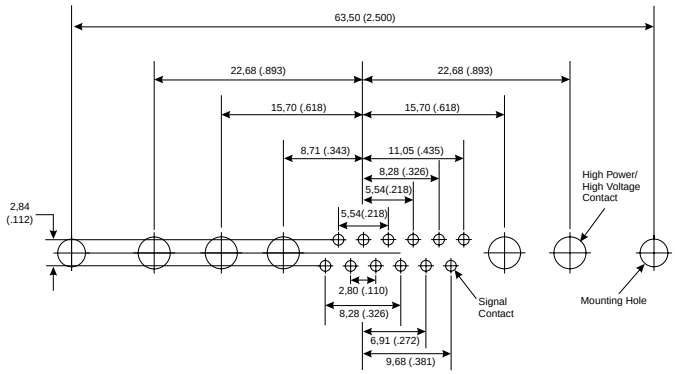

Shell Size	C
Contact Arrangement	17W5
No. of Size 20 Cavities	12 #20
No. of Size 8 Cavities	5 #8

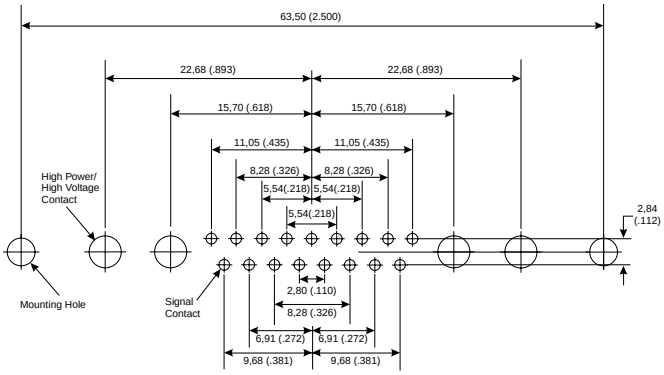

Shell Size	C
Contact Arrangement	21WA4
No. of Size 20 Cavities	17 #20
No. of Size 8 Cavities	4 #8

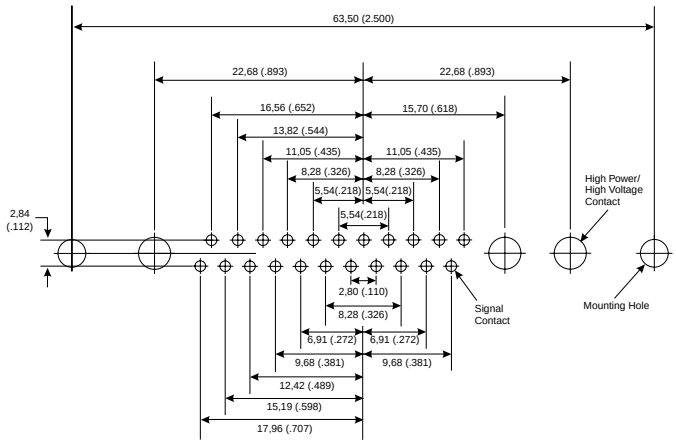

Shell Size	C
Contact Arrangement	25W3
No. of Size 20 Cavities	22 #20
No. of Size 8 Cavities	3 #8

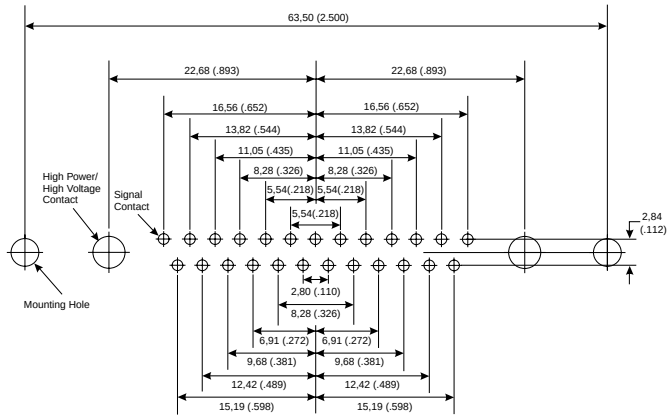

Shell Size	C
Contact Arrangement	27W2
No. of Size 20 Cavities	25 #20
No. of Size 8 Cavities	2 #8

Signal Contact Ø	Recommended PCB Hole Ø
0,60 (.024)	1,00 (.039)
0,76 (.030)	1,14 (.045)

Mounting Type	Recommended PCB Hole Ø
Without Boardlock	3,05 (.120)
With Boardlock	3,10 (.122)

Size 8 Contact Type	Recommended PCB Hole Ø
High Power (H)	3,56 (.140)
High Voltage (V)	1,96 (.077)

Dimensions are shown in mm (inch)
Dimensions subject to change

PCB Hole Pattern — Standard/European

High Power/Voltage Straight — Receptacle

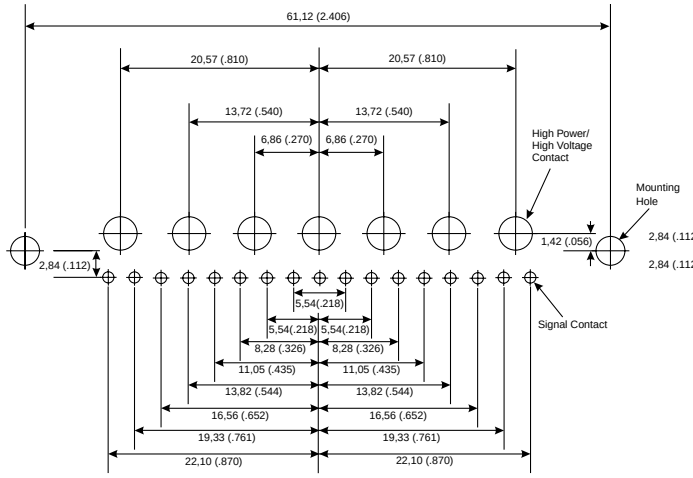

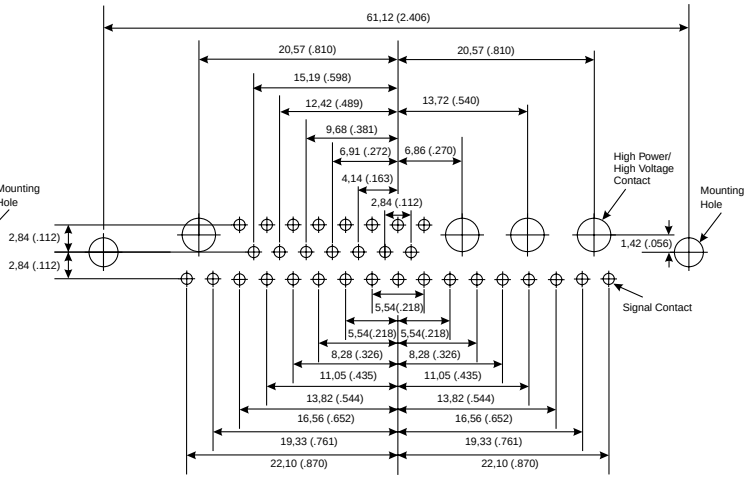

Shell Size	D	D
Contact Arrangement	24W7	36W4
No. of Size 20 Cavities	17 #20	32 #20
No. of Size 8 Cavities	7 #8	4 #8

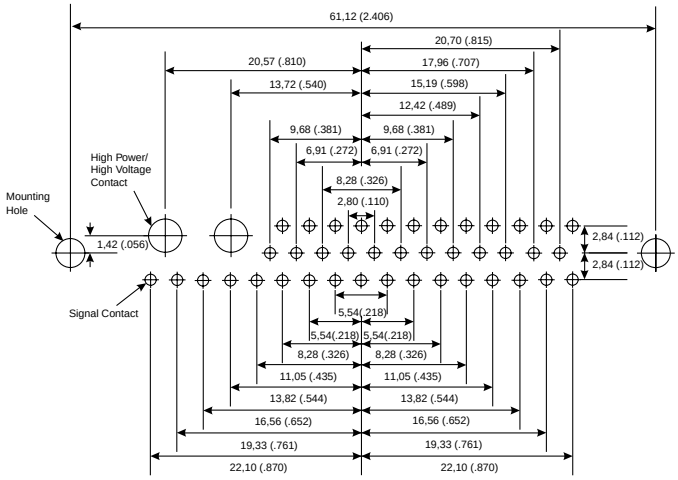

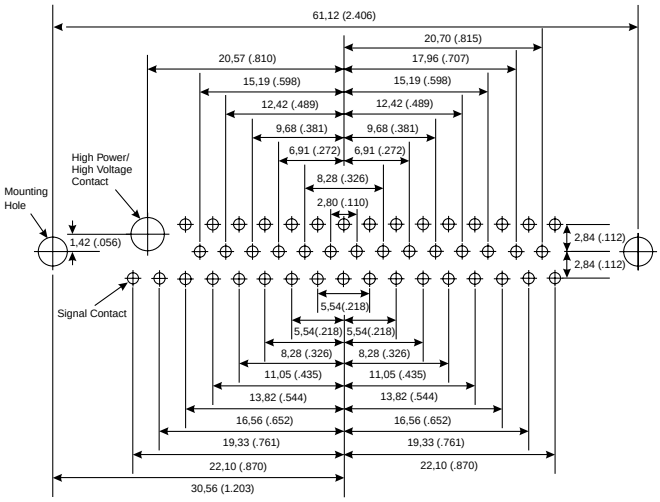

Shell Size	D	D
Contact Arrangement	43W2	47W1
No. of Size 20 Cavities	41 #20	46 #20
No. of Size 8 Cavities	2 #8	1 #8

Signal Contact Ø	Recommended PCB Hole Ø
0,60 (.024)	1,00 (.039)
0,76 (.030)	1,14 (.045)

Mounting Type	Recommended PCB Hole Ø
Without Boardlock	3,05 (.120)
With Boardlock	3,10 (.122)

Size 8 Contact Type	Recommended PCB Hole Ø
High Power (H)	3,56 (.140)
High Voltage (V)	1,96 (.077)

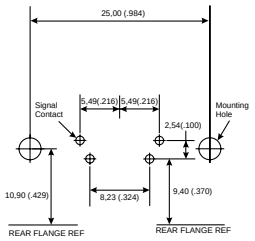

Shell Size	E
Contact Arrangement	5W1
No. of Size 20 Cavities	4 #20
No. of Size 8 Cavities	0 #8

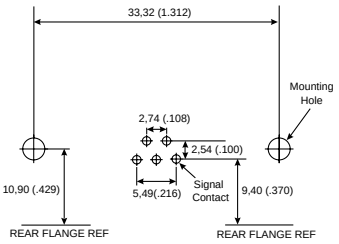

Shell Size	A
Contact Arrangement	7W2
No. of Size 20 Cavities	5 #20
No. of Size 8 Cavities	0 #8

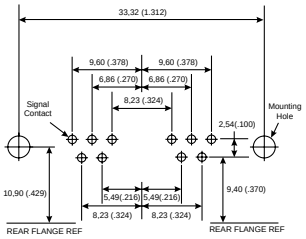

Shell Size	A
Contact Arrangement	11W1
No. of Size 20 Cavities	10 #20
No. of Size 8 Cavities	0 #8

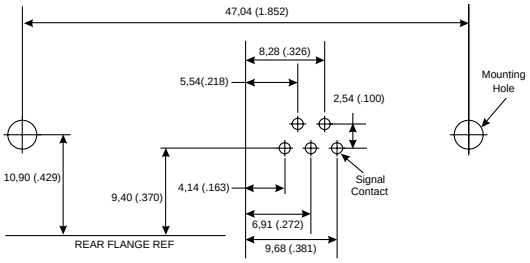

Shell Size	B
Contact Arrangement	9W4
No. of Size 20 Cavities	5 #20
No. of Size 8 Cavities	0 #8

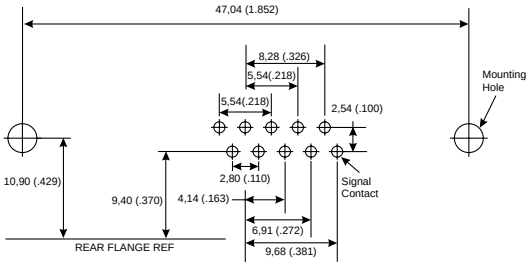

Shell Size	B
Contact Arrangement	13W3
No. of Size 20 Cavities	10 #20
No. of Size 8 Cavities	0 #8

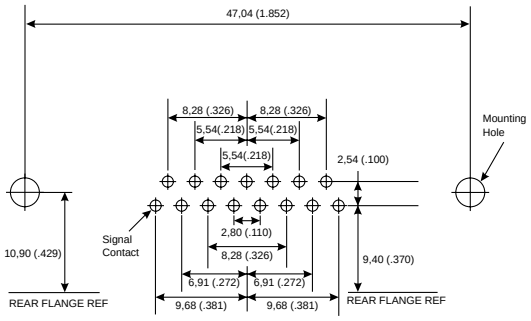

Shell Size	B
Contact Arrangement	17W2
No. of Size 20 Cavities	15 #20
No. of Size 8 Cavities	0 #8

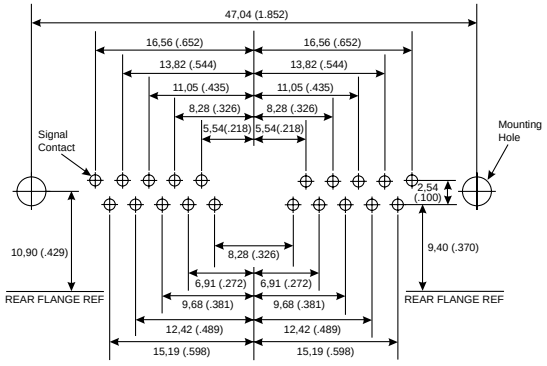

Shell Size	B
Contact Arrangement	21W1
No. of Size 20 Cavities	20 #20
No. of Size 8 Cavities	0 #8

Signal Contact Ø	Recommended PCB Hole Ø
0,60 (.024)	1,00 (.039)

Mounting Type	Recommended PCB Hole Ø
Without Boardlock	3,05 (.120)
With Boardlock	3,10 (.122)

Dimensions are shown in mm (inch)
Dimensions subject to change

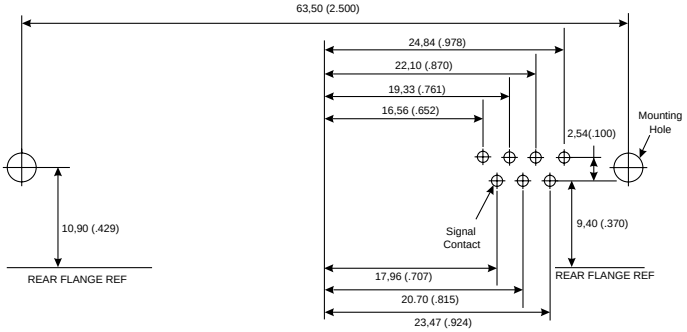

Shell Size	C
Contact Arrangement	13W6
No. of Size 20 Cavities	7 #20
No. of Size 8 Cavities	0 #8

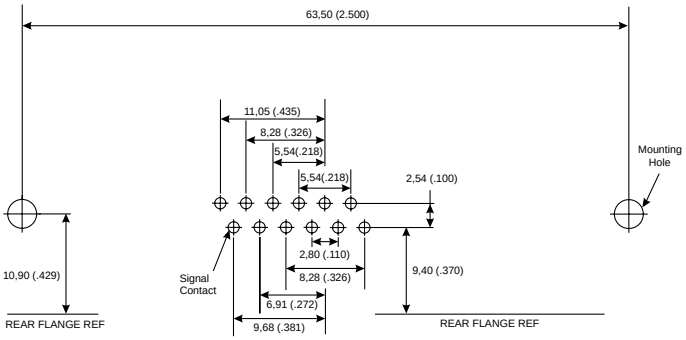

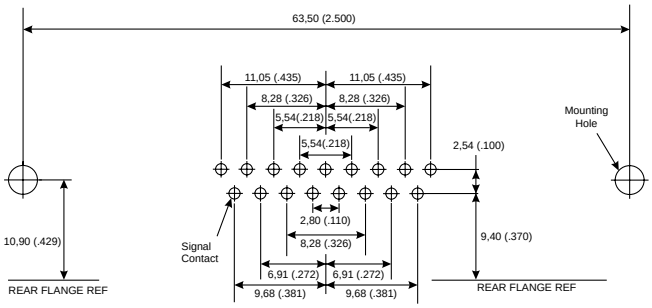

Shell Size	C	C
Contact Arrangement	17W5	21WA4
No. of Size 20 Cavities	12 #20	17 #20
No. of Size 8 Cavities	0 #8	0 #8

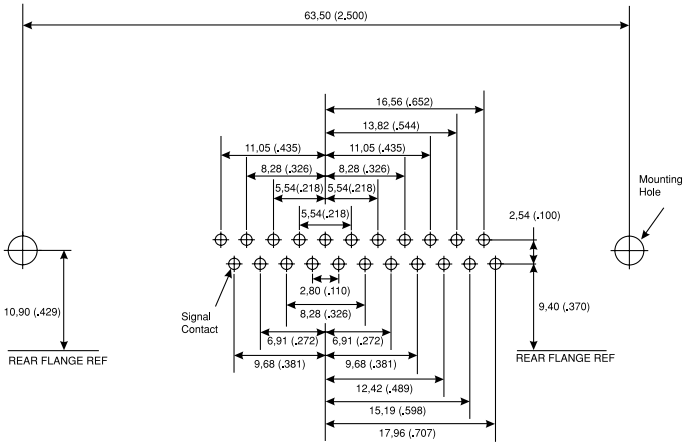

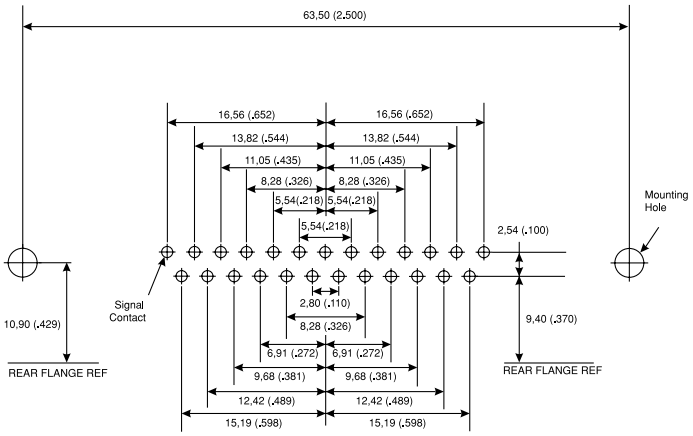

Shell Size	C	C
Contact Arrangement	25W3	27W2
No. of Size 20 Cavities	22 #20	25 #20
No. of Size 8 Cavities	0 #8	0 #8

Signal Contact Ø	Recommended PCB Hole Ø
0,60 (.024)	1,00 (.039)

Mounting Type	Recommended PCB Hole Ø
Without Boardlock	3,05 (.120)
With Boardlock	3,10 (.122)

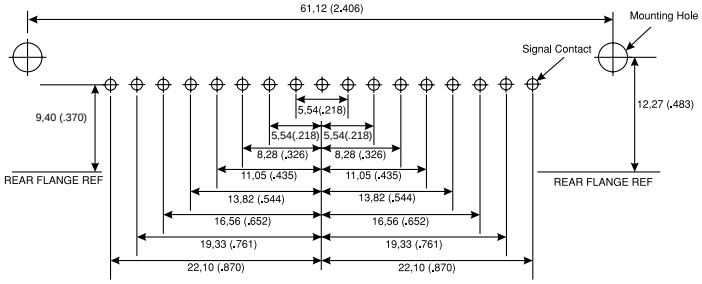

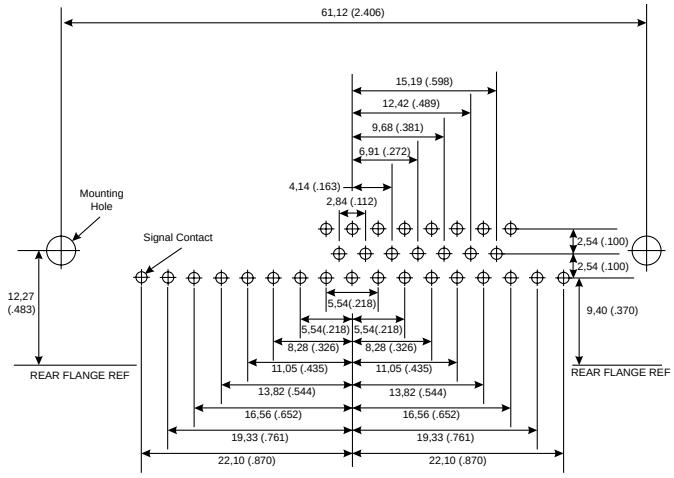

Shell Size	D	D
Contact Arrangement	24W7	36W4
No. of Size 20 Cavities	17 #20	32 #20
No. of Size 8 Cavities	0 #8	0 #8

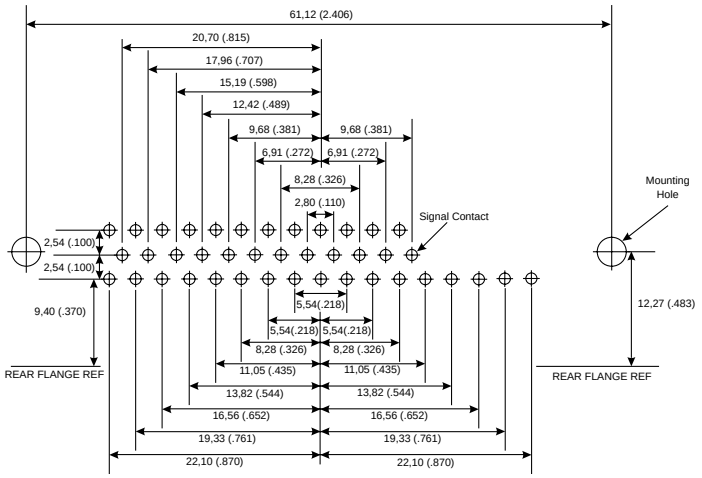

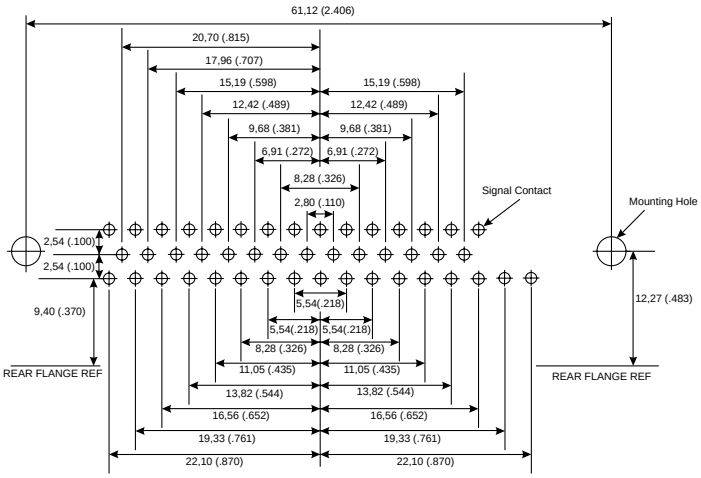

Shell Size	D	D
Contact Arrangement	43W2	47W1
No. of Size 20 Cavities	41 #20	46 #20
No. of Size 8 Cavities	0 #8	0 #8

Signal Contact Ø	Recommended PCB Hole Ø
0,60 (.024)	1,00 (.039)

Mounting Type	Recommended PCB Hole Ø
Without Boardlock	3,05 (.120)
With Boardlock	3,10 (.122)

Dimensions are shown in mm (inch)
Dimensions subject to change

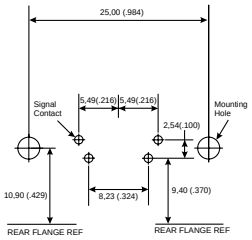

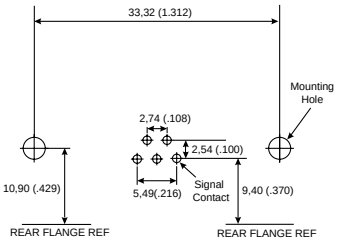

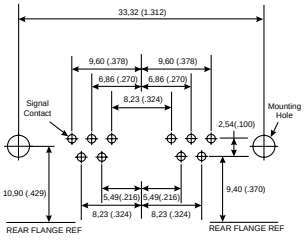

Shell Size	E	A	A
Contact Arrangement	5W1	7W2	11W1
No. of Size 20 Cavities	4 #20	5 #20	10 #20
No. of Size 8 Cavities	0 #8	0 #8	0 #8

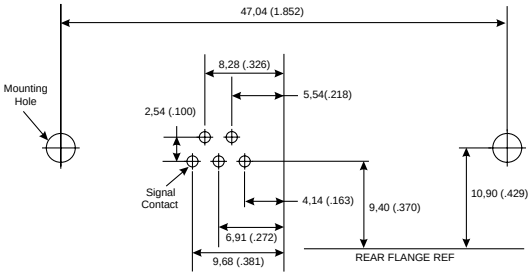

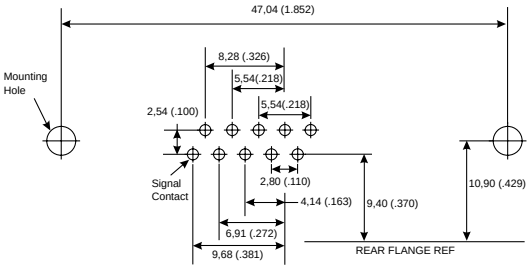

Shell Size	B	B
Contact Arrangement	9W4	13W3
No. of Size 20 Cavities	5 #20	10 #20
No. of Size 8 Cavities	0 #8	0 #8

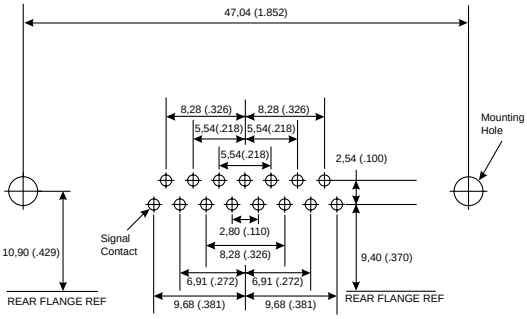

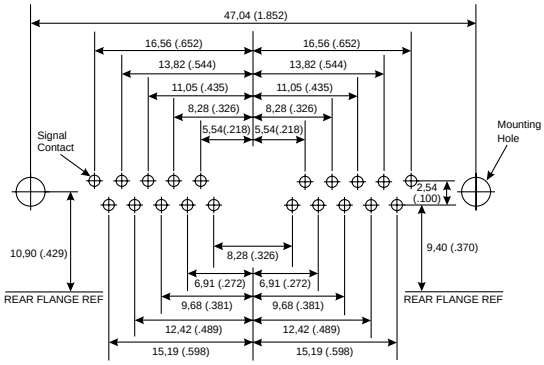

Shell Size	B	B
Contact Arrangement	17W2	21W1
No. of Size 20 Cavities	15 #20	20 #20
No. of Size 8 Cavities	0 #8	0 #8

Signal Contact Ø	Recommended PCB Hole Ø
0,60 (.024)	1,00 (.039)

Mounting Type	Recommended PCB Hole Ø
Without Boardlock	3,05 (.120)
With Boardlock	3,10 (.122)

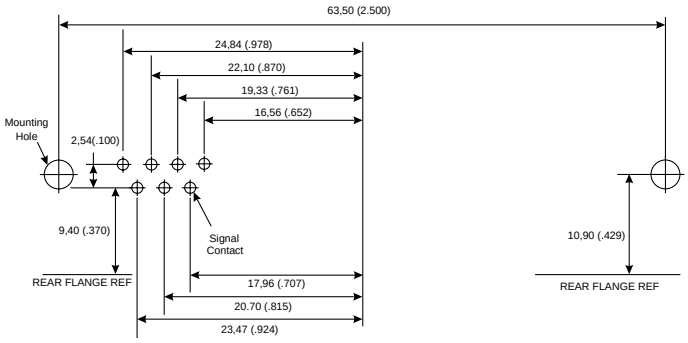

Shell Size	C
Contact Arrangement	13W6
No. of Size 20 Cavities	7 #20
No. of Size 8 Cavities	0 #8

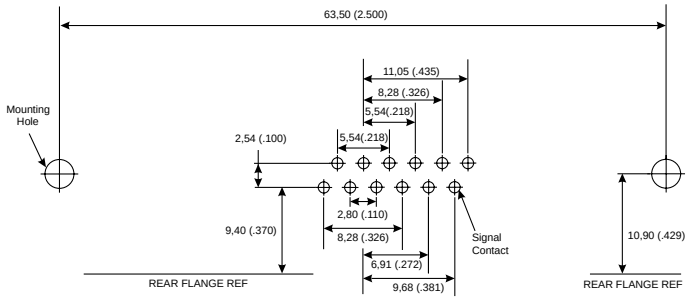

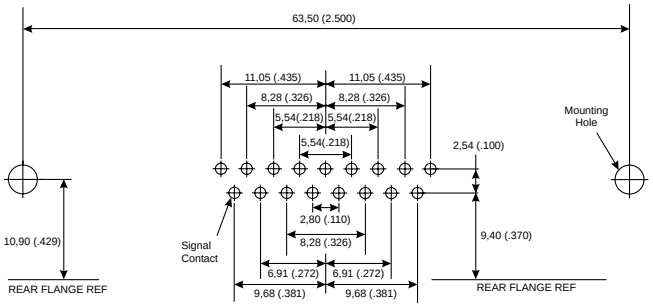

Shell Size	C	C
Contact Arrangement	17W5	21WA4
No. of Size 20 Cavities	12 #20	17 #20
No. of Size 8 Cavities	0 #8	0 #8

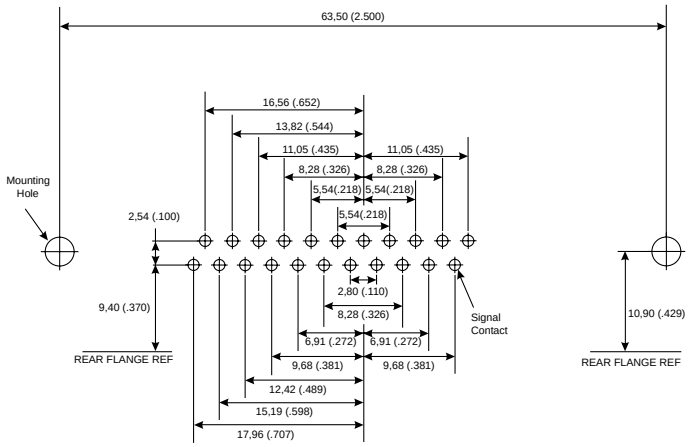

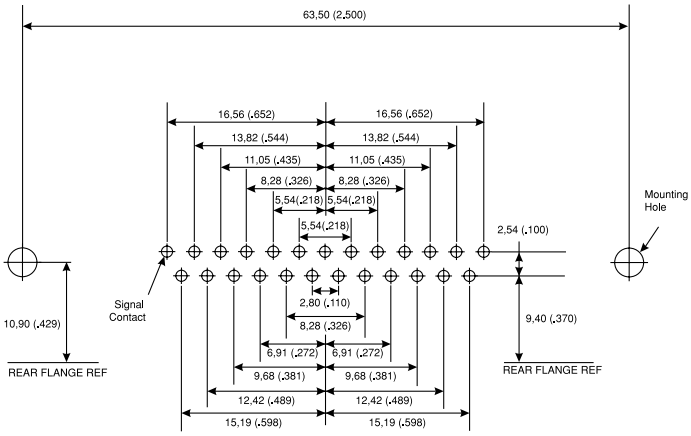

Shell Size	C	C
Contact Arrangement	25W3	27W2
No. of Size 20 Cavities	22 #20	25 #20
No. of Size 8 Cavities	0 #8	0 #8

Signal Contact Ø	Recommended PCB Hole Ø
0,60 (.024)	1,00 (.039)

Mounting Type	Recommended PCB Hole Ø
Without Boardlock	3,05 (.120)
With Boardlock	3,10 (.122)

Dimensions are shown in mm (inch)
Dimensions subject to change

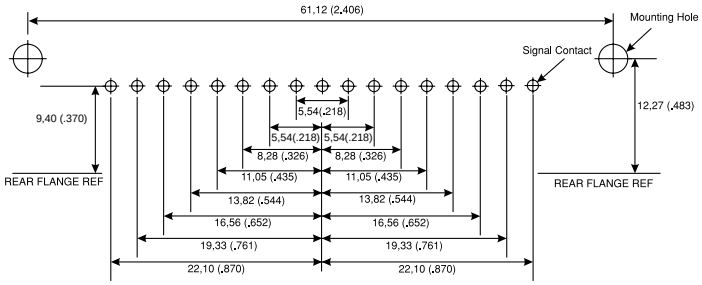

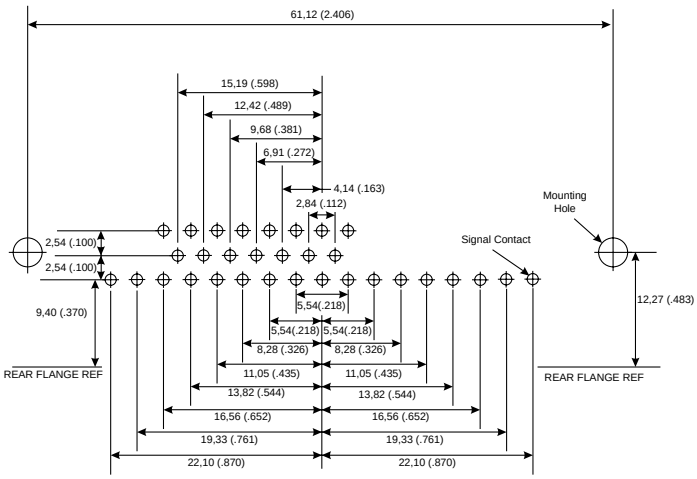

Shell Size	D	D
Contact Arrangement	24W7	36W4
No. of Size 20 Cavities	17 #20	32 #20
No. of Size 8 Cavities	0 #8	0 #8

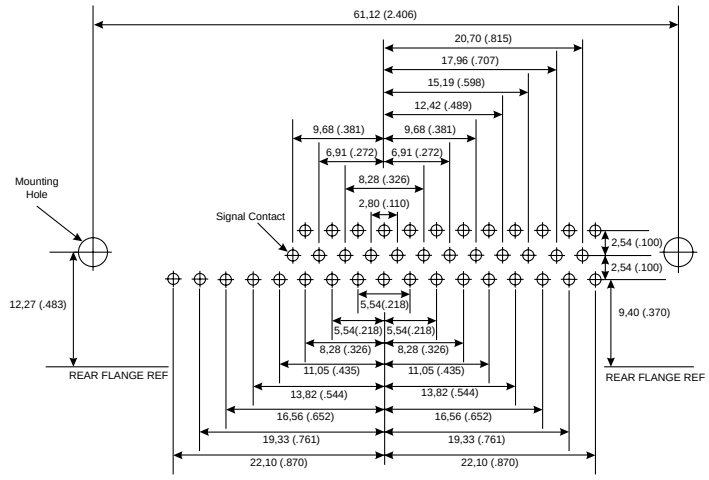

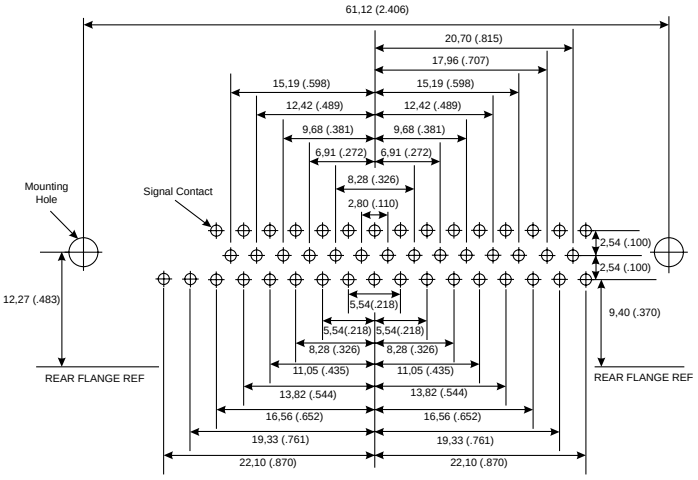

Shell Size	D	D
Contact Arrangement	43W2	47W1
No. of Size 20 Cavities	41 #20	46 #20
No. of Size 8 Cavities	0 #8	0 #8

Signal Contact Ø	Recommended PCB Hole Ø
0,60 (.024)	1,00 (.039)

Mounting Type	Recommended PCB Hole Ø
Without Boardlock	3,05 (.120)
With Boardlock	3,10 (.122)

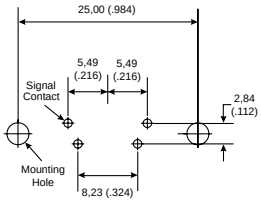

Shell Size	E
Contact Arrangement	5W1
No. of Size 20 Cavities	4 #20
No. of Size 8 Cavities	0 #8

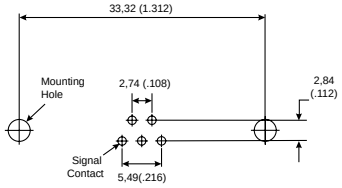

Shell Size	A
Contact Arrangement	7W2
No. of Size 20 Cavities	5 #20
No. of Size 8 Cavities	0 #8

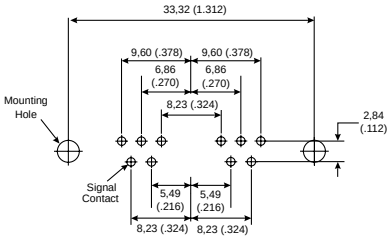

Shell Size	A
Contact Arrangement	11W1
No. of Size 20 Cavities	10 #20
No. of Size 8 Cavities	0 #8

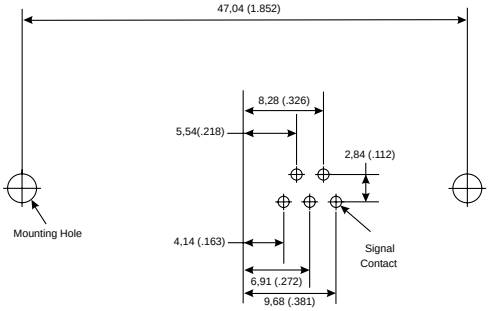

Shell Size	B
Contact Arrangement	9W4
No. of Size 20 Cavities	5 #20
No. of Size 8 Cavities	0 #8

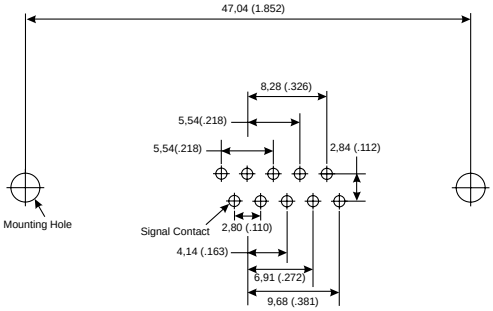

Shell Size	B
Contact Arrangement	13W3
No. of Size 20 Cavities	10 #20
No. of Size 8 Cavities	0 #8

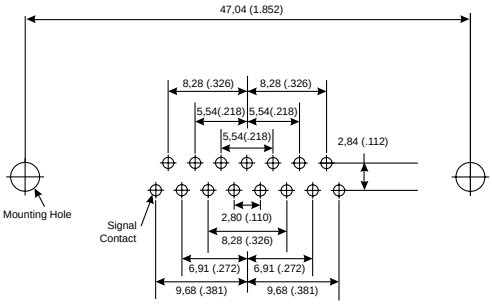

Shell Size	B
Contact Arrangement	17W2
No. of Size 20 Cavities	15 #20
No. of Size 8 Cavities	0 #8

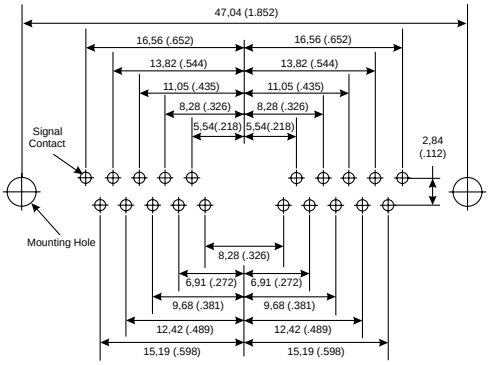

Shell Size	B
Contact Arrangement	21W1
No. of Size 20 Cavities	20 #20
No. of Size 8 Cavities	0 #8

Signal Contact Ø	Recommended PCB Hole Ø
0,60 (.024)	1,00 (.039)

Mounting Type	Recommended PCB Hole Ø
Without Boardlock	3,05 (.120)
With Boardlock	3,10 (.122)

Dimensions are shown in mm (inch)
Dimensions subject to change

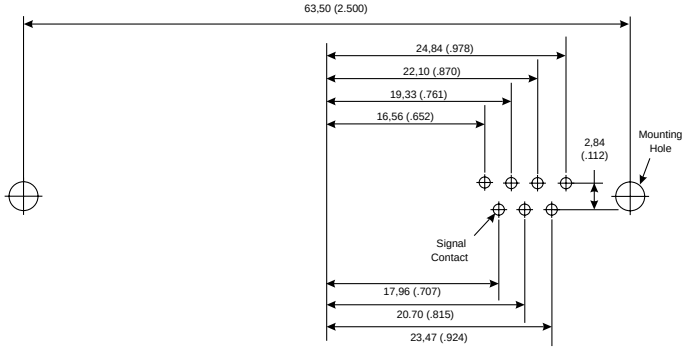

Shell Size	C
Contact Arrangement	13W6
No. of Size 20 Cavities	7 #20
No. of Size 8 Cavities	0 #8

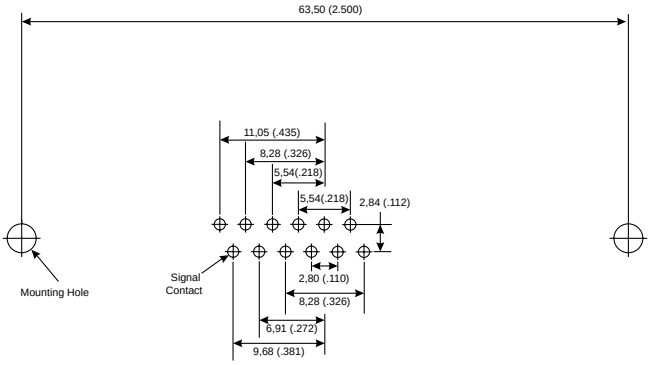

Shell Size	C
Contact Arrangement	17W5
No. of Size 20 Cavities	12 #20
No. of Size 8 Cavities	0 #8

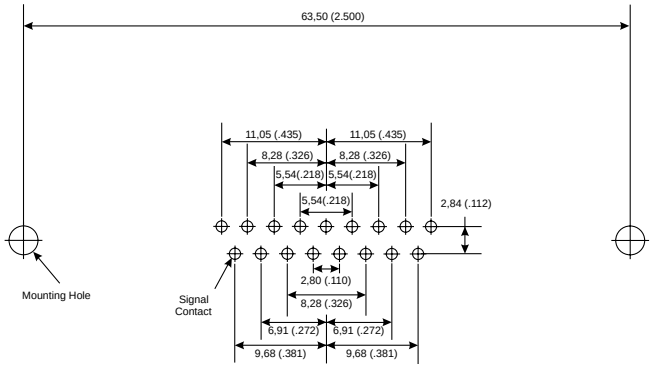

Shell Size	C
Contact Arrangement	21WA4
No. of Size 20 Cavities	17 #20
No. of Size 8 Cavities	0 #8

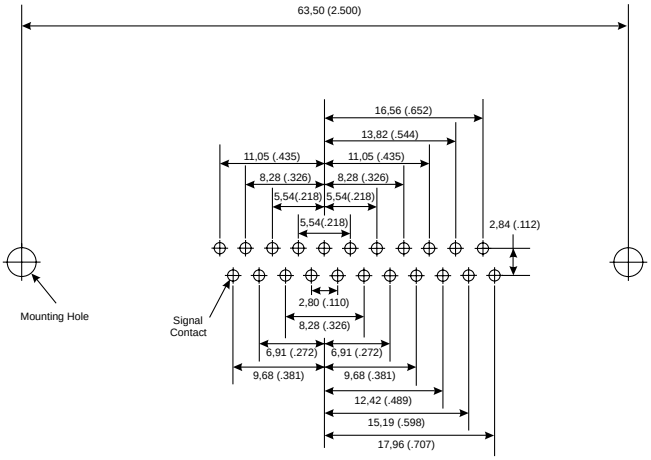

Shell Size	C
Contact Arrangement	25W3
No. of Size 20 Cavities	22 #20
No. of Size 8 Cavities	0 #8

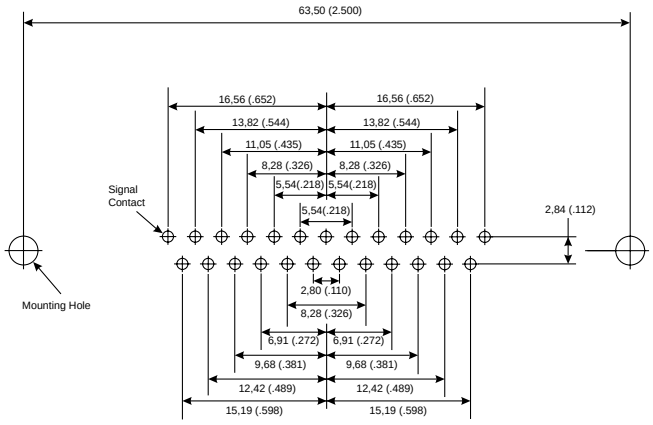

Shell Size	C
Contact Arrangement	27W2
No. of Size 20 Cavities	25 #20
No. of Size 8 Cavities	0 #8

Signal Contact Ø	Recommended PCB Hole Ø
0,60 (.024)	1,00 (.039)

Mounting Type	Recommended PCB Hole Ø
Without Boardlock	3,05 (.120)
With Boardlock	3,10 (.122)

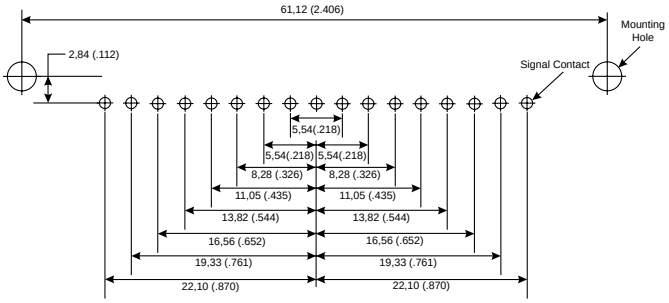

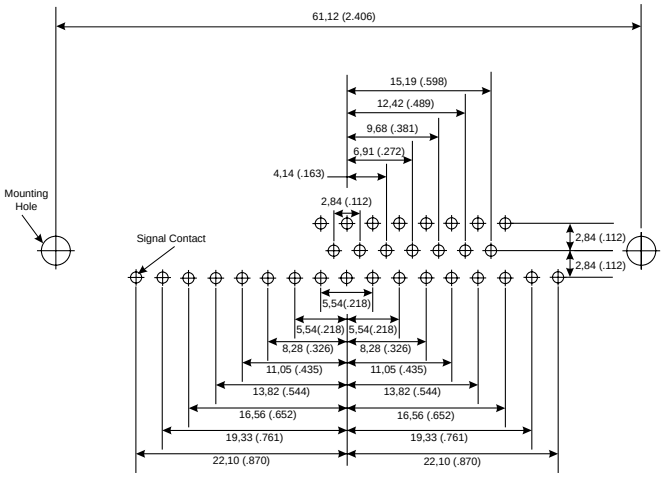

Shell Size	D	D
Contact Arrangement	24W7	36W4
No. of Size 20 Cavities	17 #20	32 #20
No. of Size 8 Cavities	0 #8	0 #8

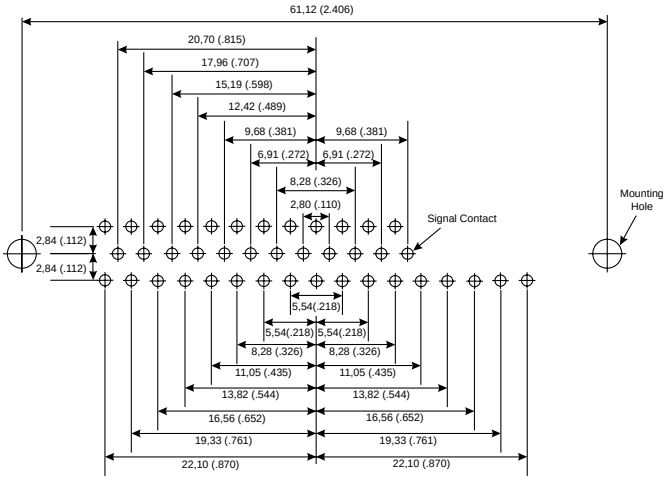

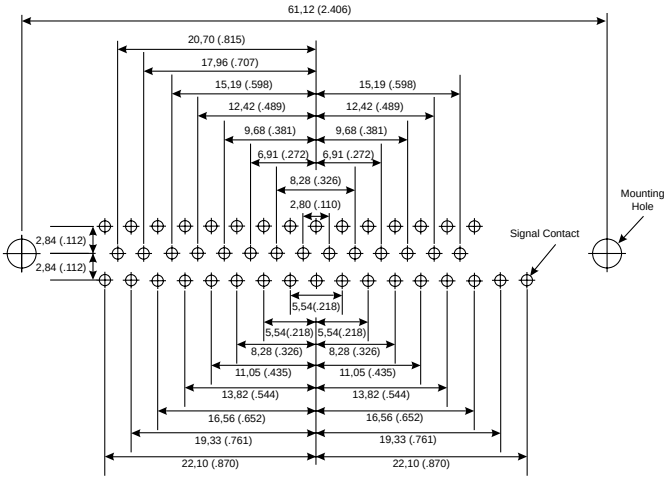

Shell Size	D	D
Contact Arrangement	43W2	47W1
No. of Size 20 Cavities	41 #20	46 #20
No. of Size 8 Cavities	0 #8	0 #8

Signal Contact Ø	Recommended PCB Hole Ø
0,60 (.024)	1,00 (.039)

Mounting Type	Recommended PCB Hole Ø
Without Boardlock	3,05 (.120)
With Boardlock	3,10 (.122)

Dimensions are shown in mm (inch)
Dimensions subject to change

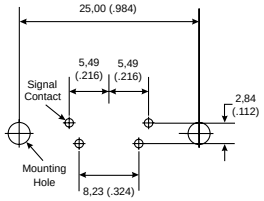

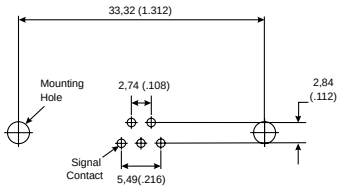

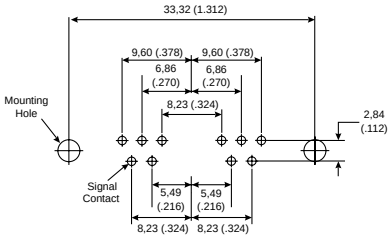

Shell Size	E	A	A
Contact Arrangement	5W1	7W2	11W1
No. of Size 20 Cavities	4 #20	5 #20	10 #20
No. of Size 8 Cavities	0 #8	0 #8	0 #8

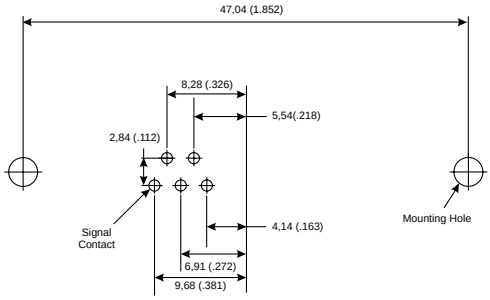

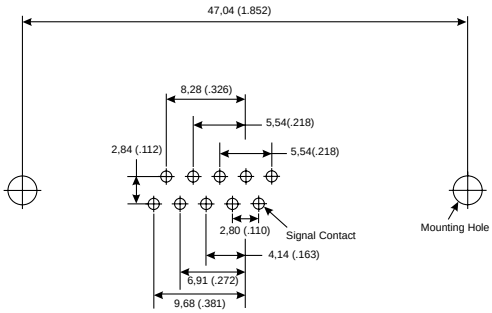

Shell Size	B	B
Contact Arrangement	9W4	13W3
No. of Size 20 Cavities	5 #20	10 #20
No. of Size 8 Cavities	0 #8	0 #8

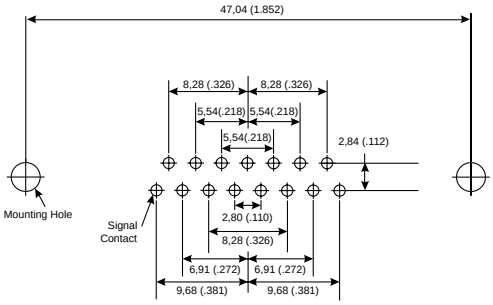

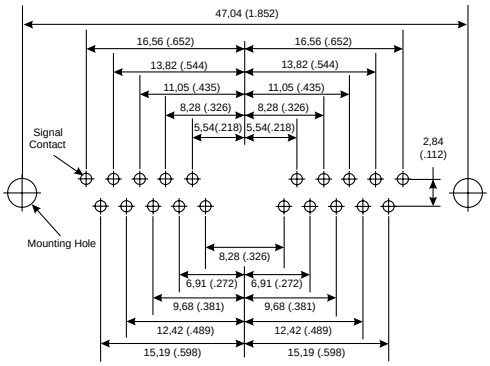

Shell Size	B	B
Contact Arrangement	17W2	21W1
No. of Size 20 Cavities	15 #20	20 #20
No. of Size 8 Cavities	0 #8	0 #8

Signal Contact Ø	Recommended PCB Hole Ø
0,60 (.024)	1,00 (.039)

Mounting Type	Recommended PCB Hole Ø
Without Boardlock	3,05 (.120)
With Boardlock	3,10 (.122)

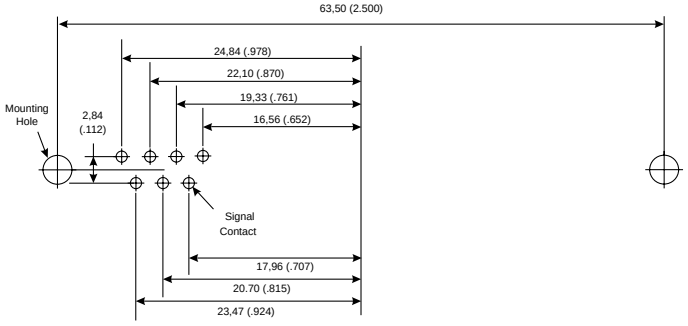

Shell Size	C
Contact Arrangement	13W6
No. of Size 20 Cavities	7 #20
No. of Size 8 Cavities	0 #8

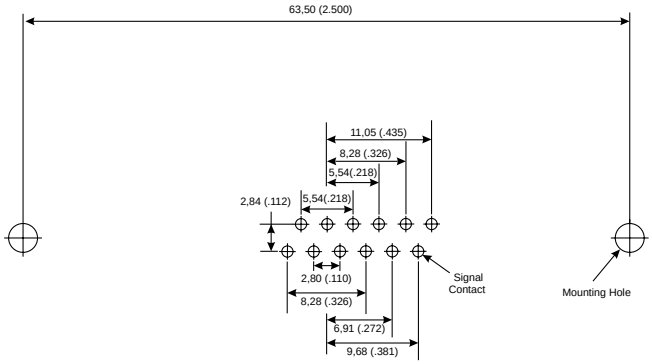

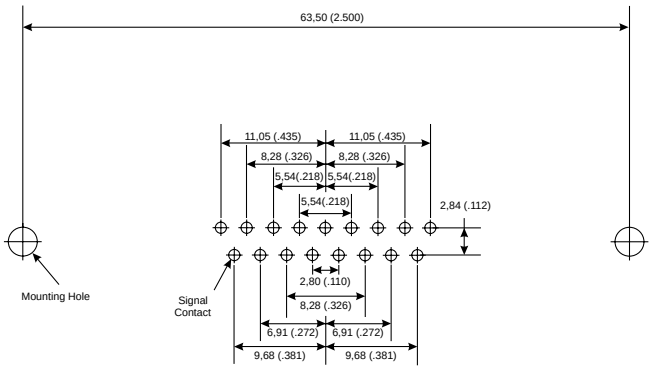

Shell Size	C	C
Contact Arrangement	17W5	21WA4
No. of Size 20 Cavities	12 #20	17 #20
No. of Size 8 Cavities	0 #8	0 #8

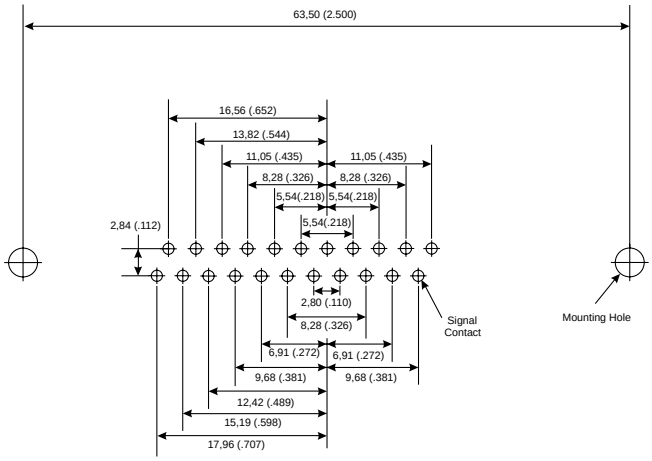

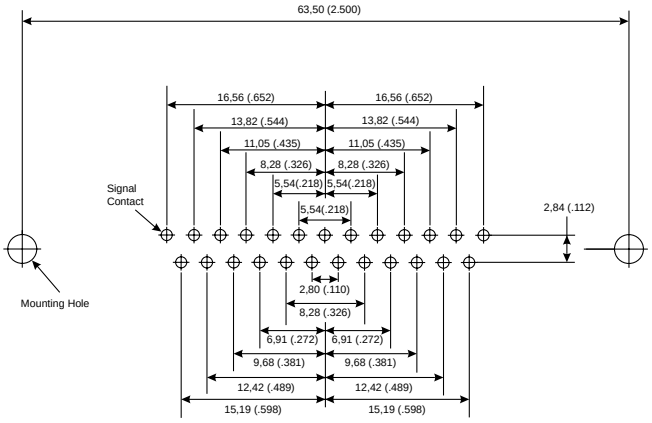

Shell Size	C	C
Contact Arrangement	25W3	27W2
No. of Size 20 Cavities	22 #20	25 #20
No. of Size 8 Cavities	0 #8	0 #8

Signal Contact Ø	Recommended PCB Hole Ø
0,60 (.024)	1,00 (.039)

Mounting Type	Recommended PCB Hole Ø
Without Boardlock	3,05 (.120)
With Boardlock	3,10 (.122)

Dimensions are shown in mm (inch)
Dimensions subject to change

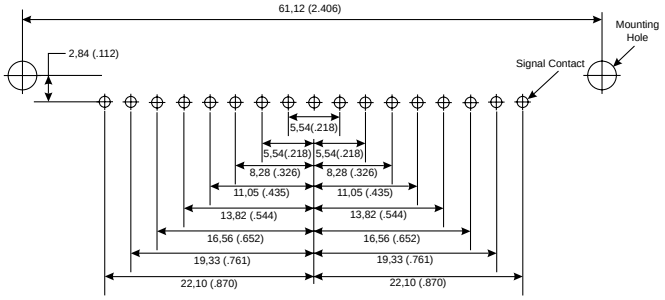

Shell Size	D
Contact Arrangement	24W7
No. of Size 20 Cavities	17 #20
No. of Size 8 Cavities	0 #8

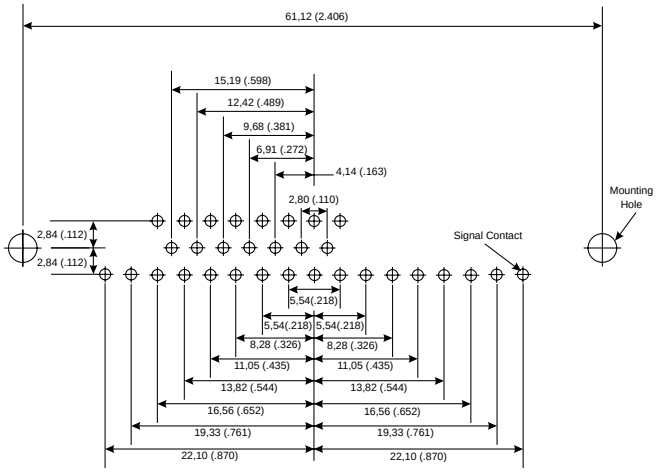

D
36W4
32 #20
0 #8

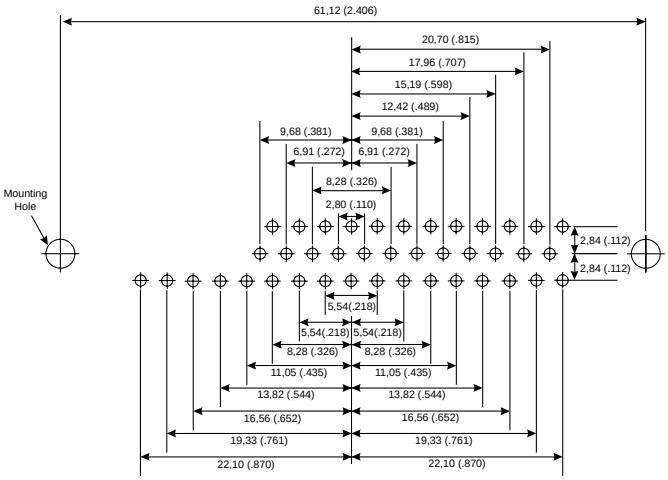

Shell Size	D
Contact Arrangement	43W2
No. of Size 20 Cavities	41 #20
No. of Size 8 Cavities	0 #8

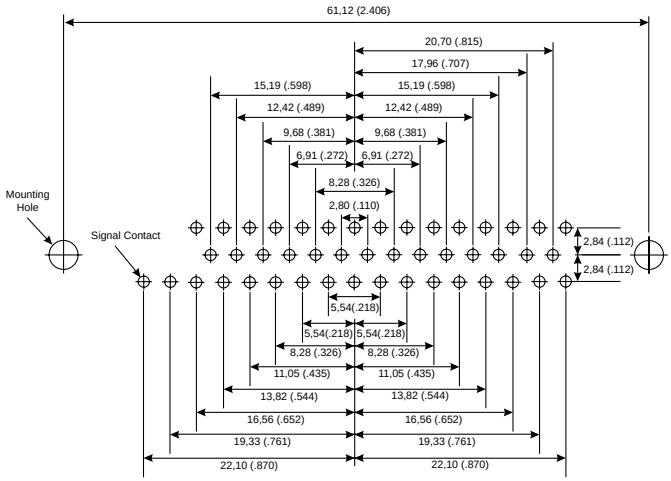

D
47W1
46 #20
0 #8

Signal Contact Ø	Recommended PCB Hole Ø
0,60 (.024)	1,00 (.039)

Mounting Type	Recommended PCB Hole Ø
Without Boardlock	3,05 (.120)
With Boardlock	3,10 (.122)

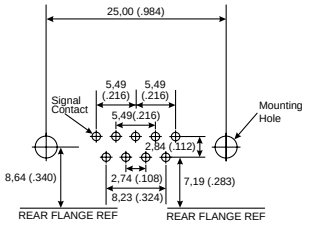

9 Contacts

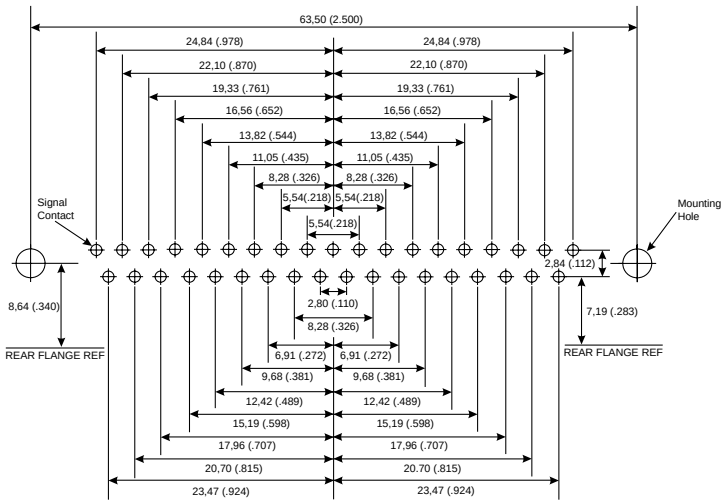

37 Contacts

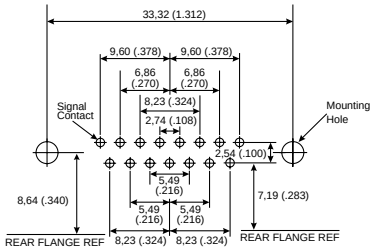

15 Contacts

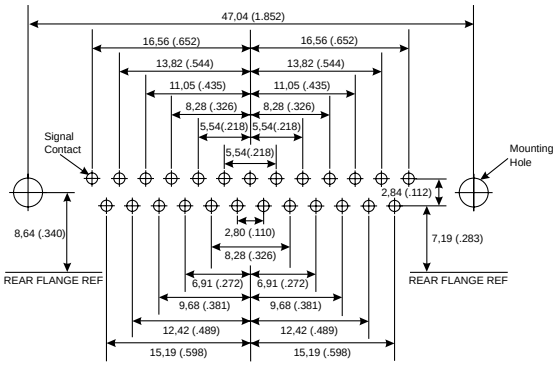

25 Contacts

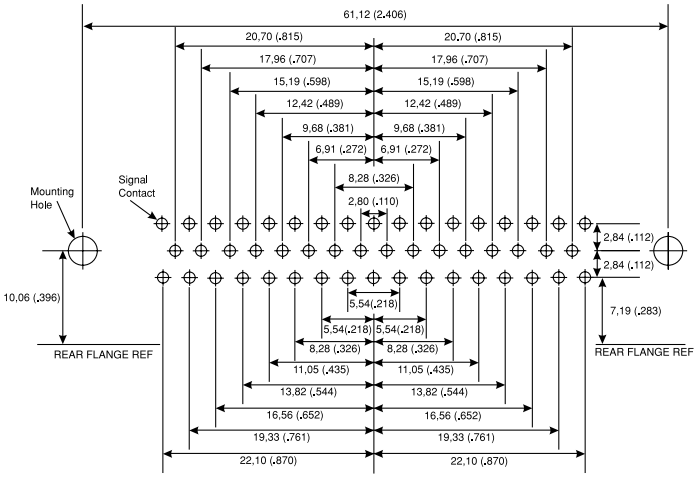

50 Contacts

Signal Contact Ø	Recommended PCB Hole Ø
0,76 (.030)	1,14 (.045)
1,00 (.040)	1,40 (.055)

Mounting Type	Recommended PCB Hole Ø
Without Boardlock	3,05 (.120)
With Boardlock	3,10 (.122)

Dimensions are shown in mm (inch)
Dimensions subject to change

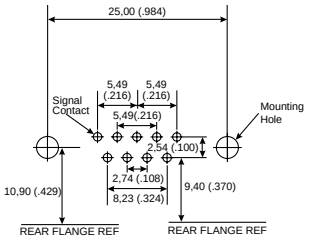

9 Contacts

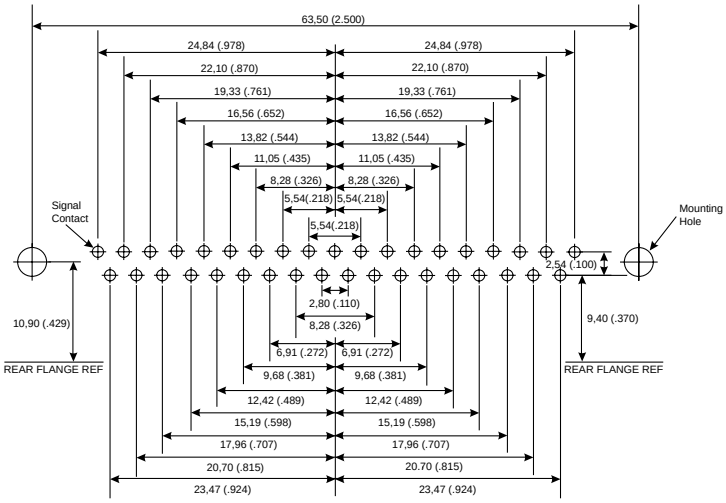

37 Contacts

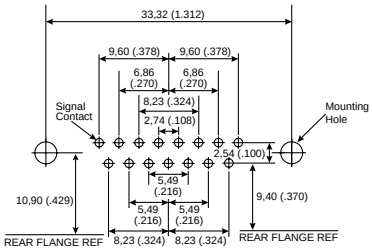

15 Contacts

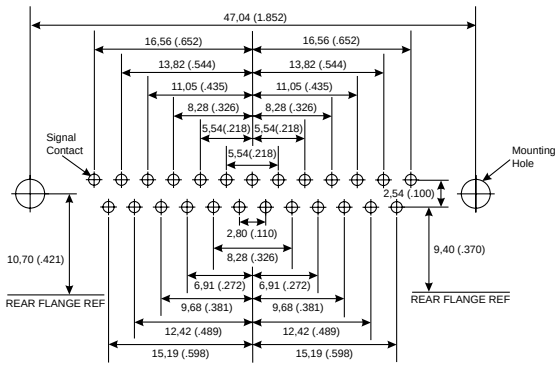

25 Contacts

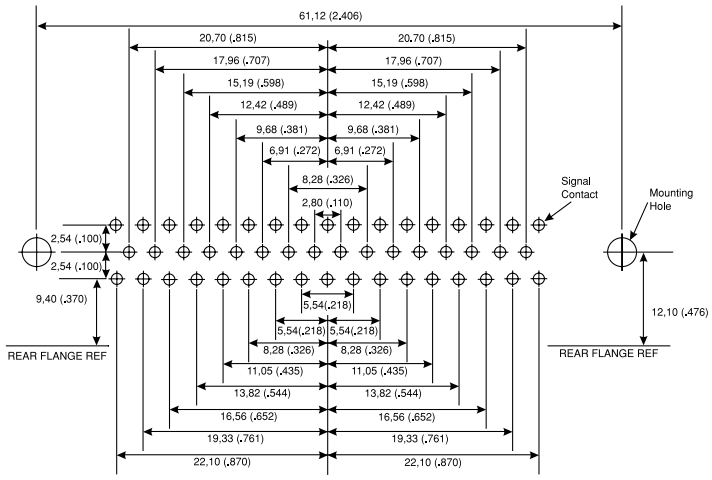

50 Contacts

Signal Contact Ø	Recommended PCB Hole Ø
0,60 (.024)	1,00 (.039)

Mounting Type	Recommended PCB Hole Ø
Without Boardlock	3,05 (.120)
With Boardlock	3,10 (.122)

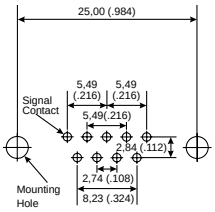

9 Contacts

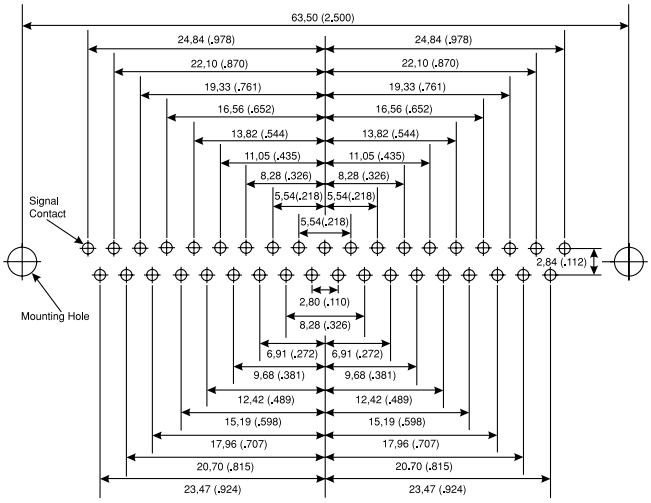

37 Contacts

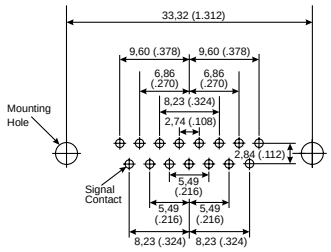

15 Contacts

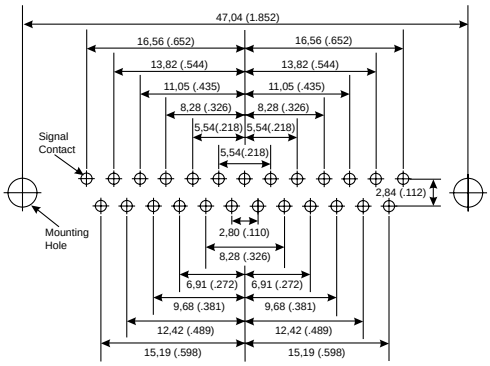

25 Contacts

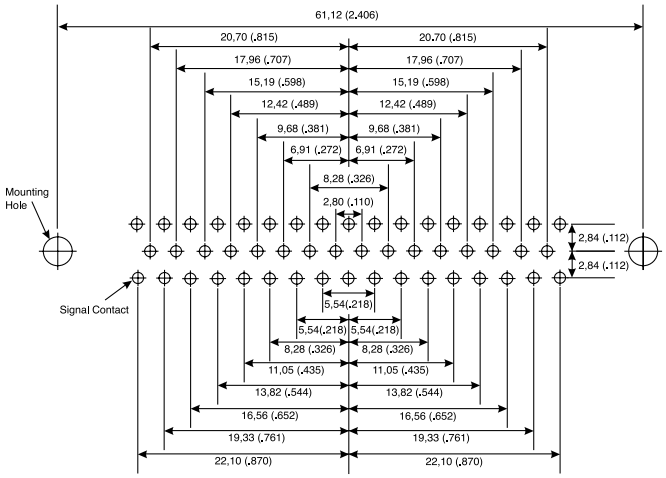

50 Contacts

Signal Contact Ø	Recommended PCB Hole Ø
0,60 (.024)	1,00 (.039)
0,76 (.030)	1,14 (.045)
1,00 (.040)	1,40 (.055)

Mounting Type	Recommended PCB Hole Ø
Without Boardlock	3,05 (.120)
With Boardlock	3,10 (.122)

Dimensions are shown in mm (inch)
Dimensions subject to change

ABT-607 Pneumatic Crimper

ABT-607

Products: D*A, MDSM, 75 Ohm Crimp Coax

The ABT-607 is a pneumatic powered and controlled machine. It is designed for customers with moderate volume. This machine is designed to semi-automatically crimp stamped and formed contacts onto pre-stripped stranded or single conductor electrical wire. This machine will accomodate size 34 thru 12 AWG wire and is actuated by the use of a foot pedal.

Machine Crimp Rate: 800 per hour

Power Requirements: Pneumatic = 100 psi, 2 cu. ft. per min.

ABT-620 UCCS Semi-Automatic Crimper/Stripper

ABT-620 UCCS

Products: D*A, MDSM

The ABT-620 Universal Cannon Crimper/Stripper is a pneumatic powered, microprocessor controlled machine. It is designed to semi-automatically strip insulation from stranded or single conductor electrical wire and attach a stamped and formed contact by crimping. The machine will accommodate 34 thru 12 AWG wire. Primary application of the machine is the termination of jacketed cable where the individual leads cannot be stripped on fully automated equipment. The ABT-620 UCCS operates automatically upon insertion of a wire or it can be switched over to foot pedal operation as desired.

Machine Strip/Crimp Rate: 1200+ per hour

Power Requirements: Electrical = 115 VAC, 60 Hz, 20 A
Pneumatic = 80 psi, 3 cu. ft. per min.

CBT-646 Vibra-Bowl Crimper

CBT-646

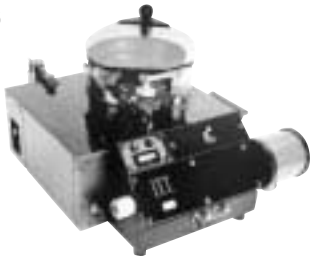

Products: D*MA

The CBT-646, Vibra-Bowl Crimper is a pneumatically powered, electronically controlled machine. It is designed to semi-automatically crimp closed barrel, machined contacts, as used in the aerospace and commercial industries. The machine will accommodate wire sizes 30 thru 12 AWG. The CBT-646 is actuated automatically upon insertion of a pre-stripped stranded or single conductor wire.

Machine Crimp Rate: 1300+ per hour

Power Requirements: Electrical = 115 VAC, 60 Hz, 5 A
Pneumatic = 85 psi, 2 cu. ft. per min.

Glossary of Terms

In every job speciality there are certain words and phrases used by the ''insiders'' which after a time become almost a language unique to that speciality. D Subminiature technology is a typical example of that condition.

The following pages provide some explanations, in an attempt to clarify some of the terms that are commonly used by engineers and sales staff at ITT Cannon.

The list is not comprehensive, but highlights many of the expressions commonly used. Should you have any comments or additions please contact us. Feedback will be appreciated.

Accelerated Aging — A connector test in which temperature, voltage, current, or other parameters are increased beyond the normal operating values to observe deterioration in a relatively short period of time.

Accessories — Auxiliary devices such as cable clamps, endbells, gaskets, or any number of mechanical hardware devices that can be added to a connector.

Alloy — A composition of two or more elements, of which at least one is a metal. In connector applications it is usually a combination of metals which is used to create an alloy superior in performance to any of its individual components.

Alternating Current — A flow of electricity which reaches a maximum in one direction, decreases to zero, then reverses itself and reaches maximum in the opposite direction. This cycle is repeated continuously. The number of such cycles per second is the frequency. The average value of the voltage during any cycle is zero. Abbreviated ac.

Ambient Temperature — The temperature of the environment surrounding the connector. Usually the air. Normally used as the reference when specifying the OPERATING TEMPERATURE range of the connector.

Ampere — A unit of electrical current or rate of flow of electrons. One volt across one ohm of resistance causes a current of 1 ampere. Abbreviated Amp or A.

Anodize — A protective, insulating oxide layer formed on a metal by electrolytic action. Occasionally used as the outer most layer in connector plating, anodize is a very tough, non-conductive plating.

Attenuation — Power loss in an electrical system, expressed in decibels.

AWG — American Wire Gauge. A standard for wire diameters based on the approximate circular mil area of the wire. As numbers get larger, wire diameters decrease in size (a size 16 AWG wire has a larger diameter than a size 22 AWG).

Backshell — (Also known as Endbell) The outer rear end of the connector which is attached by means of internal threads or screws. It adapts the connector to its wire connections in a variety of ways. Typical backshells might have cable clamps to secure a wire bundle, ridges for heat shrink tubing, pipe threads, or shielded termination mechanisms. Backshells may be straight, 90°, or 45°.

Bandwidth — The range of frequencies within which performance falls within specific limits. Usually the bandwidth is given as an operating range and the operating specifications apply only to that bandwidth, unless otherwise stated.

Bar — A centimeter-gram-second unit of pressure (force exerted on a unit of area) equal to 1,000,000 dynes per square centimeter. Formerly known as microbar. Its symbol is b.

Base Metal — The metal which the connector or connector component is made and over which various platings will be deposited.

Beryllium Copper — An alloy of copper used to make contacts. It is relatively expensive, but has superior spring qualities, is resistant to fatigue, and can operate at higher temperatures than other materials such as phosphor bronze. It is used when numerous insertion and extraction cycles are required.

Body — The main portion of the connector made of the shell, insulator, and contacts.

Boot — A rear accessory, usually made of a resilient material, which is used around a multiconductor cable to add additional insulation, strength, abrasion resistance, or sealing.

Brass — Metal alloy of copper and zinc used for contacts. It is low cost, an excellent conductor, and resists fatigue.

Breakdown — An electrical discharge through a connector insulator or insulation on a wire. A catastrophic failure mode.

Breakdown Voltage — The voltage at which an insulator ruptures.

Breakout — The point at which wires are separated from a multi-conductor cable or wire bundle for routing to other points.

C — Abbreviation for Centigrade, or more properly Celsius, since the term Centigrade was officially abandoned by international agreement in 1948. See CELSIUS.

Cable Assembly — A cable (or bundle of cables) with plugs and/or receptacles on each end.

Cable Clamp — A rear connector clamping accessory which tightens over a cable or wire bundle to provide strain relief to the cable. The cable clamp may be part of a more elaborate endbell or it may be used alone. Some cable clamps also provide cable jacket sealing using a resilient gland; for example the MS3057-C, others provide only strain relief.

Cadmium — A metallic element chemically related to zinc and mercury, widely used for plating. It has an extraordinary ability to resist outdoor corrosion. It is especially resistant to alkali. Cadmium is electrically conductive and it is easy to solder. Its symbol is Cd.

CECC — Abbreviation for Electronic Components Committee of CENELEC, the European committee for Electrotechnical Standardization. CECC uses the IEC test methods, and thus is based upon worldwide standards.

Celsius — A temperature scale in which the freezing point of water is 0° and the boiling point is 100° at normal atmospheric pressure. Formerly known as Centigrade, but officially changed to Celsius by international agreement in 1948.

CEN — Abbreviation for European Committee for Standardization. A European standards group corresponding to the ISO at the European level.

CENELEC — Abbreviation for European Committee for Electrical Standardization. A European standards group corresponding to the IEC at the European level.

Chamfer — A bevel cut on the inside edge of an insulator contact cavity or a mounting hole. In a contact cavity the chamfer is intended to guide the mating pin into the cavity. In a mounting hole it is a countersink to accept a cone shaped bolt.

Characteristic Impedance — The characteristic impedance of a transmission line is the impedance of the line when it is terminated in a perfect load (a load that absorbs all the energy and reflects none, such that VSWR = 1.00).

Clearance Hole — See Through Hole.

Closed Entry — An insulator design which limits the diameter of the mating contacts.

Glossary of Terms

Closed Socket Contact — A socket contact in which the mating cavity limits the entry of a contact or probe having a diameter larger than the mating pin.

Coax — Abbreviation for coaxial.

Coaxial Cable — A cable that comprises a single copper wire surrounded by insulating material, wire shielding or mesh, and a plastic protective sheath.

Component — An essential functional part of the connector.

Contact — The conductive element in a connector which makes the actual connection between the wire and the mating connector for the purpose of transferring electrical energy. Ideally the contact should add nothing to the circuit. In the real world, however, contacts typically have a small CONTACT RESISTANCE and associated potential drop.

Contact Alignment — The overall play that a contact has in the insulator cavity to allow the mating contacts to self align. Also called contact float.

Contact Arrangement — See LAYOUT.

Contact Cavity — A defined hole in the connector insulator into which the contacts fit. The cavities are generally marked with a unique designation or number for ease of identification.

Contact Resistance — The maximum amount of resistance which a contact introduces into the connection when carrying a specified current (usually stated in milliohms). When not stated, values are typically given for ''Initial'' or ''new'' contacts. Most specifications also limit the maximum resistance during or after each of a series of extreme tests, such as ''Contact Resistance After Corrosion Test''. These figures are typically slightly higher than ''Initial''.

Contact Retention — The maximum allowable axial load which can be applied to a contact from either direction without it being dislodged from the insulator. Usually stated in Newtons or pounds of force.

Contact Separation Force — The force required to separate a pair of mated contacts. Usually stated in Newtons or pounds of force.

Contact Size — This usually relates to the maximum size wire this contact can nominally accommodate. It is based on that AWG size most closely corresponds to the circular mil area of the engaging end of a pin contact for that size. For example, a size 16 contact can accomodate a size 16 AWG wire maximum and the pin corresponds to the CMA of a size 16 AWG. Note, however, that oversized crimp pots are available for some crimp contacts which will allow, for example, a size 16 contact to accommodate a size 14 AWG wire.

Contact Spacing — The distance between the centers of adjacent contacts.

Creepage — The conduction of electricity across the surface of an insulator.

Creepage Distance — The shortest distance between contacts of opposite polarities, or between a live contact and ground, measured over the surface of the insulator.

Creepage Path — A path across the surface of the insulator between two conductors. Lengthening the path reduces the possibility of arc damage.

Crimp — A method of attaching a contact to a wire through the application of pressure.

Crimp Contact — A contact which is terminated to a wire by means of crimping with an appropriate die and tool. After termination, an insertion tool is normally used to insert the crimped contact into the connector. Removable crimp contacts can be FRONT RELEASE or REAR RELEASE. An extraction tool is usually required to remove the contact.

Crosstalk — Undesired electrical currents in conductors caused by electromagnetic or electrostatic coupling from other conductors or from external sources. Also, leakage of optical power from one optical conductor to another.

CSA — Abbreviation for Canadian Standards Association.

Current — The movement of electrons through a conductor. Current is measured in amperes. Its symbol is L.

Current Rating — The maximum current that a particular wire, contact, or connector can accommodate. NOTE: When several wires are used in a single connector or elevated temperature or altitude is involved, derating curves must be applied to these ratings. A typical derating system is MIL-W-5088 which allows the user to calculate the derating effects of current, ambient temperature, number of wires in the bundle, and altitude.

Decibel — A standard unit of measure for transmission gain or loss. It expresses the ratio of power input to power output. Abbreviated dB. The term dBm is used when 1 milliwatt is the reference level.

Derating — To reduce the voltage, current, or power rating of a connector to improve its reliability or to permit operation at high ambient temperatures or altitudes.

Derating Curve — A graph of the change in power handling capability of a connector as a function of ambient temperature or altitude. Typically the graphed function is curved, hence the name.

Diallyl Phthalate — A thermosetting plastic used for insulators and some types of connector housings. It has outstanding resistance to chemicals, excellent dimensional stability, and superior electrical insulating properties.

Dielectric — An insulator used to isolate two conductors having a low loss factor (RF cables). The perfect insulator is a vacuum.

Dielectric Constant — That property (K) of an insulating material which is the ratio of the parallel capacitance (C) of a given configuration of electrodes with the material as the dielectric, to the capacitance of the same electrode configuration with a vacuum as the dielectric.

Digital — A signal comprising discrete elements.

DIN — Abbreviation for Deutsche Industrie Norm, a German standards organization.

Direct Current — An essentially constant value of current that flows in only one direction. Abbreviated dc.

Dust Cap — A cover used in place of a mating connector to seal it against dirt and moisture. Usually secured to the connector by a captive chain, wire, or rope.

Electroplating — To deposit a metal on the surface of a conductor using electrolysis.

EMI/RFI — Electro-Magnetic Interference and Radio Frequency Interference. This is unwanted stray electronic radiation which may enter, and/or be emitted by an electronic system. The most common method of shielding interconnections against this radiation is to use wires with a metallic braided shield and a connector system which will extend the shield through the interconnection. This type of design will keep radiation from entering, or being emitted by the system. Backshells for shielded cable and connectors with threads or grounding fingers are typically used for this purpose. Call for the specific EMI/RFI accommodations of the connectors in this catalog.

Glossary of Terms

EN — Abbreviation for Euro Norm. A European market-wide product standard.

Endbell — See BACKSHELL.

Extraction Tool — A device used to remove a (removable) contact from a connector insulator. The extraction tool may be inserted into the mating face of the insulator (FRONT RELEASE) or the wire side (REAR RELEASE). In either case, the contact comes out the rear, or wire side, of the connector.

Fahrenheit — A temperature scale in which the freezing point of water is defined as 32° and the boiling point is 212° at normal atmospheric pressure. See the conversion tables for converting Fahrenheit to Celsius. Abbreviated F.

Female Contact — See SOCKET CONTACT.

Ferrule — A bell shaped ring which is placed over a WIRE SEALING GROMMET to provide uniform axial compression of the grommet and to minimize the transmission of torque to the grommet when the backshell is screwed on to the rear of the connector. Ferrules are a part of the sealing mechanism at the rear of a connector. Ferrules are normally a separate component part of the connector although some backshells have integrated ferrules. Ferrules are usually made from a thermoplastic material, but occasionally ferrules are made of metal.

Finish — The metalic coatings used on contacts and metal connectors. These are thin layers of metal designed to improve conductivity, solderability, or to resist corrosion. Typical contact finishes are gold or silver. Typical shell finishes are olive drab over cadmium, electroless nickel, or black anodize.

Flange — A square mounting flange with four mounting holes for bolting the connector to a panel. The mounting holes may be through holes or threaded.

Flanged Receptacle — (Also known as a Box Mount or Wall Mount) The shell of this connector has a square flange with mounting holes at each corner. Mounting holes are usually through holes, but may be threaded. Flanged receptacles can usually be front or rear panel mounted depending upon panel thickness. Some connectors have two different versions, one for front mounting, and one for rear panel mounting.

Flash Plating — As commonly used in connector terminology, flash refers to extremely thin platings of metal, for example: gold flash is a very thin plating of gold. So thin, that the thickness is generally not specified.

Front Mounting — A receptacle that can only be mounted to the front of a panel with its mounting FLANGE outside the equipment.

Front Release — For crimp type removable contacts, front release means that the appropriate extraction tool is *inserted from the front*, or mating face, of the connector. The contact is then pushed out the *rear* (wire side) of the connector.

Gas Tight — The mating of two contact surfaces which are so tight that corrosive gasses can not enter the joint.

Gold — A precious metal that is more conductive than silver or copper. Because it does not corrode and is highly conductive, it is used as plating for contacts. Its chemical symbol is Au.

Grommet Cavity — A defined hole in the WIRE SEALING GROMMET through which the wires are passed. The cavities are generally marked with a unique designation or number for ease of use.

Guide Pin — A special pin which is inserted into a socket contact before the contact can be inserted into the connector insulator. Guide pins provide a rounded surface at the front of the socket and greatly aid in pushing the contact into the insulator thus avoiding damage to both the insulator and the contact. Typically, small size socket contacts require the use of guide pins while larger sizes can be inserted without them.

Harness — A group of wires or cables bundled together with attached connectors and/or components in a preshaped assembly.

Hz — Symbol for Hertz, an international unit of frequency equal to one cycle per second. That is, 20,000 Hz is 20,000 cycles per second.

I/O — Input/Output

IEC — Abbreviation for the International Electrotechnical Commission. An international organization that develops standards exclusively for electrical engineering. CENELEC is the equivalent organization at the European level.

Impedance Match — When a transmission line is terminated so that VSWR = 1.00. Another definition is when a source is terminated in an impedance that allows optimum energy transfer.

Indentor — The part of a crimping die which indents the contact barrel to form the actual crimp. Indentors normally make six or eight multiple indentions for each crimp.

Initial — A test result taken prior to any other environmental testing. For example, contact resistance is frequently specified ''Initial'', that is, with ''new'' contacts. Most specifications also limit the maximum resistance during or after each of a series of extreme tests, such as ''Contact Resistance After Corrosion Test''. These figures are typically slightly higher than ''Initial''.

Insert — See INSULATOR.

Insert Arrangement — See LAYOUT.

Insert Retention Force — The maximum allowable force which should be applied to the face of the insulator without dislodging it from the shell or causing any change in connector performance specifications. Usually stated in Newtons or pounds of force.

Insertion Force — The effort, usually stated in ounces or Newtons, required to engage two contacts or connector halves.

Insertion Loss — The attenuation that results when a transducer is inserted in a transmission line. It is the ratio of the power input to the transducer to the power out of the transducer expressed in decibels.

Insertion Tool — A small, hand-held tool used to insert contacts into a connector.

Insulation — A material that has high electrical resistance and is suitable for covering or encasing electrical components to prevent a short circuit.

Insulation Displacement Connector (IDC) — A connector contact with sharp tines which pierce and displace the wire insulation and make direct electrical connection with the conductor. Normally used with multipin connectors which must be terminated to flat cable. This is a fast, low cost method to terminate many conductors simultaneously.

Insulation Resistance — The minimum resistance (usually stated in Megohms) between adjacent contacts and between the contacts and the shell at a specific voltage. When not stated, values are typically given for new insulators. Most specifications also specify minimum resistance figures during or after each of a series of extreme tests, such as ''Insulation Resistance During Dry Heat''.

Insulation Support — An extended portion at the rear of a crimp contact that is crimped around the wire insulation to provide extra strain relief. This crimp is in addition to the crimp over the conductor which provides the actual electrical termination.

Glossary of Terms

Insulator — The insulating element into which the contacts are mounted in a connector. This can be a resilient material, thermoplastic, or a thermoset compound, among other materials.

Insulator Rotation — A method of differentiating a circular connector if more than one connector with the same sex and layout is to be used in a system. The insulator is permanently positioned in the shell so that only a connector with the same degree of rotation can be mated with it. Possible rotations are specific to each layout with some layouts having many possible rotations and others having none. A chart of valid rotations is listed by layout for connectors capable of being rotated. Most connector series use the military convention of assigning letter designations for specific degrees of rotation (for example: W, X, Y, Z). See KEYING.

Interchangeable — The characteristic of connectors in which a connector half of one manufacturer or series will directly replace that of another manufacturer and provide the same electrical and mechanical function.

Intermateable — The characteristic of connectors in which a connector half of one manufacturer or series will mate directly with the connector half of another manufacturer.

Intermittent — Occurring at intervals. A connection which passes electrical current only in random or undesirable intervals.

Intermountable — The characteristic of connectors in which one manufacturer's connector or series will mount in exactly the same panel space and mounting holes as another manufacturer's product.

ISO — Abbreviation for the International Standards Organization. A group that operates at the international level and sets most standards for industry, with the exception of electrical engineering and telecommunications which are set by the IEC and ITU respectively. CEN is the equivalent organization at the European level.

Jacket — The outermost layer of insulation in a cable composed of several wires.

Jackscrew — A screw attached to one half of a connector pair used to mechanically align, draw them together, and lock them in place.

Key — A mechanism used to polarize connectors by the user. See KEYING.

Keying — A method of differentiating a connector if more than one connector with the same sex and layout is to be used in a system. The key is usually a pin or other projection which can be located in a contact cavity or slot. The key will prevent a connector without a matching orifice from mating. Keying and POLARIZATION serve the same function, but keying can be done by the user, while polarization is manufactured into the connector and normally can not be altered by the user.

Layout — The number, size, and geometric arrangement of the contacts in a connector. When a connector is said to have a certain ''layout'' it refers to a specific contact configuration. For example, Combo D® has 2 pages of drawings showing the arrangement of the contacts in the insulator. Each of these contact cavity arrangements can be referred to as a layout.

Locator — A part of a crimping tool TURRET. Rotation of the locator sets the tool for a particular size or sex contact. See TURRET.

Male Contact — See PIN CONTACT.

Mating Life — The minimum number of times a connector can be mated and unmated and still meet all of its design specifications. The maximum life may be much higher than this figure.

Mil — One thousandth of an inch (.001). Used in the United States as a unit of length in wire diameters and linear dimensions.

Mil-Spec — Abbreviation for Military Specification.

Milliampere — One one-thousandth (.001) of an ampere. Abbreviated mA.

Millimeter — Metric unit of linear measure. 1 millimeter = .03937 inches. Abbreviated mm.

Milliohm — One one-thousandth (.001) of an ohm. Abbreviated mΩ.

mm^2 — Millimeters squared. A standard for wire diameters used in Europe instead of AWG. As numbers get larger, wire diameters increase in size. The relationship between mm^2 and AWG is reverse logarithmic. 1 mm^2 = 1973 circular mils. A conversion graph is needed to make accurate comparisons between AWG and mm^2. Call for assistance.

Mounting Clip — Any of a variety of mounting accessories used to secure a connector or connector pair to a rigid surface.

Multi-Conductor Cable — Two or more individual wires surrounded by a jacketing material.

Nest — The portion of a crimping die that supports the contact barrel during crimping.

Newton — A unit of acceleration. One Newton is the force capable of accelerating 1 kilogram to one meter per second per second. 1 pound force = 4.448221 Newtons. Abbreviated N.

Ohm — The unit of electrical resistance. One ohm is the value of resistance through which a potential difference of one volt will maintain a current of one ampere. Its symbol is the Greek letter omega (Ω).

Operating Temperature — The range of AMBIENT TEMPERATURES over which the connector can operate and still meet all of its design specifications.

Operating Voltage — The range of voltages over which the connector can be operated. Safety precautions must be taken anytime a voltage in excess of 50V is to be used in a circuit. Check your local and national codes for guidelines.

Outgassing — The circumstance in which an insulator releases gasses trapped within it under a vacuum or conditions of decreased pressure, high heat, or both.

Panel — The outside surface of a piece of equipment on to which connectors are mounted. The panel is usually made of metal.

Panel Mount — A connector designed to be mounted on a panel by means of screws or jam nut.

PCB — Abbreviation for Printed Circuit Boards.

Performance Class 1 — Performance class per European specification DIN 41652, specifying contact performance to 500 mating cycles, followed by testing per DIN 41640, Part 21. The contact is subjected to severe environmental conditions, including industrial gasses, after the 500 mating cycles, and must meet basic contact resistance, engaging force, and separation force tests.

Performance Class 2 — Performance class per European specification DIN 41652, specifying contact performance to 200 mating cycles, followed by testing per DIN 41640, Part 21. The contact is subjected to severe environmental conditions, including industrial gasses, after the 200 mating cycles, and must meet basic contact resistance, engaging force, and separation force tests.

Glossary of Terms

Performance Class 3 — Performance class per European specification DIN 41652, specifying contact performance to 50 mating cycles, followed by testing per DIN 41640, Part 21. The contact is subjected to severe environmental conditions, including industrial gasses, after the 50 mating cycles, and must meet basic contact resistance, engaging force, and separation force tests.

Peripheral Seal — A resilient seal used to keep moisture from entering the connector at the point where the plug and receptacle shells meet. A common method is to use flat gaskets on receptacles and O-rings on plugs.

Phosphor Bronze — An alloy of copper, tin, and phosphorus used to make spring contacts. It is typically used in lower cost contacts where frequent insertions and withdrawals and high temperatures are not a factor.

Pin — A male contact. See PIN CONTACT.

Pin Contact — The contact which has a long shaft at the engagement end which enters the socket contact.

Plating — See FINISH.

Plug — The male portion of a connector pair usually employing a coupling nut to secure it to the receptacle half. A plug may have either pin or socket contacts.

Polarization — A mechanical mechanism that allows connector halves to intermate in only one specific orientation. This can be accomplished by asymmetrical shapes of the two halves as in a D Subminiature connector, insulator rotation, keys, keyways, ramps, or other means. Polarization prevents connectors of the same size and/or same layout from intermating when this is undesirable, such as when two otherwise identical connectors are used on the same panel. Polarization is typically done by the assembler and can not be changed by the user, while keying is typically done by the user with an auxiliary keying device.

Polarizing Pin — A mechanism used to polarize connectors, manufactured into the connector. See KEYING.

Potting — The permanent sealing of a cable to a connector using an insulating material such as potting compound to exclude moisture or provide strain relief. See POTTING CUP.

Potting Compound — A sealing material used in potting to fill a potting cup.

Potting Cup — A bell-shaped (plastic) backshell with an enlarged opening for the wires. After the connector is loaded with wired contacts, the potting cup is attached to the rear of the connector. The inside of the cup is then filled with a potting compound. When the compound hardens, it forms a solid, permanent, watertight mass around the wires.

Potting Ring — A portion of the POTTING CUP which secures the bell shaped cup to the rear of the connector, usually by means of internal threads.

Pre-Tin — To apply tin-lead solder to the contact solder cup and/or conductor prior to soldering the two together.

Rear Mounting — A receptacle that mounts through the panel from the rear, with its mounting flange inside the equipment. Typically, rear mount receptacles are slightly longer than front mount types to allow for the thickness of the panel. Flange mount receptacles usually come in front and rear mount versions. All Jam nut receptacles are rear mount.

Rear Release — For crimp type removable contacts, rear release means that the appropriate extraction tool is *inserted from the rear*, or wire side, of the connector. The contact is then pulled out the rear of the connector.

Receptacle — The connector half that mates with the plug. The receptacle has threads, pins or ramps which engage the coupling nut on the plug, locking the two halves together. A receptacle may have either pin or socket contacts.

REF — Abbreviation for Reference.

Removable Contact — A contact which can be inserted and removed from the insulator by the user. An insertion tool and extraction tool are normally required to insert and remove the contact.

Removal Tool — See EXTRACTION TOOL

Resistance — That property of a substance which impedes current and results in the dissipation of power in the form of heat. The unit of resistance is the ohm.

Return Loss — The ratio of the power reflected from a discontinuity in a transmission line to the power incident.

RFI — See EMI/RFI.

Root Mean Square — The square root, of the average of the squares, of the values of a periodic quantity (like alternating current), taken through one complete period. It is the effective quantity of a periodic quantity. Abbreviated rms.

Salt Spray Test — A test, or series of tests, in which mated and/or unmated connectors are subjected to salt water under specified conditions. Used to test the connector's resistance to corrosion and any associated degradation in electrical function.

Screw Machine Contact — A contact made from a solid bar or rod using screw machine operations. Some screw machine contacts include secondary elements which are welded, crimped, or formed around the basic screw machined part to complete the contact.

Selective Plating — The application of metal PLATING to selective areas of the contact, particularly those areas subject to wear. Precious metal platings may be applied selectively to those contact surfaces responsible for the electrical connection, reducing the contact cost without sacrificing electrical performance.

Shell — The outside case of a connector into which the insulator and contacts are situated.

Shell Size — A standard system developed for military circular connectors for indicating the diameter of the shell. The system is based upon 1/16″ increments, that is, a size 16 shell is one inch in diameter.

Shield Effectiveness — The ability of a shield to screen out undesirable signals.

Shock — An abrupt impact applied to a stationary object. It is usually expressed in gravities (g).

Socket — A female contact. See SOCKET CONTACT.

Socket Contact — The contact which has an opening at the engagement end to accept the pin contact.

Solder Contact — A contact which is terminated to the wire with solder. Solder contacts are normally bonded into the insulator and can not be removed by the user. The alternative is crimp contacts to which a wire is attached by crimping. Crimp contacts can usually be inserted and removed by the user.

Solder Cup — The end of a SOLDER CONTACT is designed to accept a wire which will then be soldered to the contact.

Stamped and Formed Contact — Contacts made by stamping and forming a sheet of metal rather than by machining metal stock. Also see SCREW MACHINE CONTACTS.

Glossary of Terms

Star Clip — One of several designs used for screw machine socket contacts. A tiny plated star shaped clip is captivated inside a solid barrel into which the pin contact fits. The clip creates a multi-point area of mechanical and electrical continuity between the mated contacts.

Stripper — A tool to remove insulation from a wire.

Test Voltage — The range of voltages over which the connector has been tested per the perimeters in the applicable specification.

Thermoplastic — A plastic material that can be softened by heat and rehardened into a solid state by cooling. This process can be accomplished using a variety of techniques.

Thermoset — A plastic material which hardens when heat and pressure are applied. Unlike thermoplastic, it cannot be remelted or remolded.

Through Hole — (Also known as a clearance hole) A mounting hole without threads.

Turret — An interchangeable device which is attached to a CRIMP TOOL that allows the tool to crimp a range of contacts. Each turret is made to crimp a specific style contact or a range of contacts and/or wire gauges. See LOCATOR.

UL — Abbreviation for Underwriter's Laboratories, a corporation supported by a group of underwriters for the purpose of establishing safety standards covering certain types of equipment and components in the United States.

UL 94V-O — A flammability performance rating set by Underwriter's Laboratories for plastics.

V — Symbol for volt.

Vac — Volts, alternating current.

Vdc — Volts, direct current.

Vibration — A continuously reversing change in the magnitude of a given force.

Volt — The unit of measurement of electromotive force. It is equivalent to the force required to produce a current of 1 ampere through a resistance of one ohm.

Voltage — The force which causes current to flow through an electrical conductor. Its symbol is E. The greatest effective difference in potential between and two conductors of a circuit.

Voltage Drop — The difference in voltage between two points in a circuit due to the loss of electrical pressure as a current flows through an impedance.

Voltage Rating — The maximum voltage which a connector can sustain without breaking down or varying from design specifications.

Voltage Standing Wave Ratio — If a signal is sent down a transmission line any discontinuity will send a reflection back in the opposite direction.

Wire Sealing Grommet — A resilient disc with holes in it to accommodate the individual wires entering the rear of the connector. Each cavity forms a tight seal against the wire insulation (as long as wires within the specified diameter are used). The grommet seals the back of the connector against moisture, dirt, and air. The grommet is normally held in place and compressed by a backshell and/or ferrule. It is usually a separate component, but may be part of the insulator itself. Also see GROMMET CAVITY.

Wire Size — A numerical designation for conductor diameter. This catalog uses American Wire Gauge (AWG) which is based on the approximate circular mil area of the wire. See AWG and mm^2.

Wrap Post Contact — A type of contact which is terminated by wrapping wire around a post in a manner that deforms the wire and creates a gas-tight connection between the wire and the post. This method is slow and labor intensive. If used at all, it is used in prototype work.

Obsolete Products

General Application Connectors♦

D*C	*Burgun D* with snap-in, rear release machined or stamped crimp contacts. Refer to D*U products.
D*P	90° connectors for I/O applications, UL 94V-0 rated. Refer to D*U products
D*PF	Straight and 90° PCB applications, UL 94V-0 rated. Refer to D* products.
AD*	Part number change only. Refer to ZD* products.
D*11148 D*(SMT)	SMT – Surface Mount D, no replacement, only through holes available. Refer to ZED* products.
D*P1	Machined pressfit replaced by stamped pressfit. Refer to D*NG products.
D*TC	Part number change only. Refer to D* products.

Available Products Not Listed Within This Publication

General Application Connectors♦

D*U	*Burgun D* with snap-in, rear release machined or stamped crimp contacts, UL 94V-0 rated.
D*SF	*Speedy D* for IDC ribbon cable, UL 94V-0 rated, accomodates Sizes 28-26 AWG cable on 1,27 (.050) conductor spacing.
D*MA	Military specification quality removable crimp style contacts for high performance applications.
ZD*A	Low cost, stamped contacts, high density 90° PCB connectors.

Special Application Connectors♦♦

GD*	*Grommet D* environmentally sealed, crimp, snap-in, rear release contacts.
D*D	Environmentally sealed, cast aluminium shell. Product not intermatable with M24308 type D Subminiature connectors.

♦ Commercial Applications Only

♦♦ Military or Commercial Applications

Consult factory for details.

Dimensions are shown in mm (inch)
Dimensions subject to change

Part Number	Page
015-8755-000	207
015-8755-001	207
030-2042-002	195
030-2487-016	83
030-2487-017	83
030-2488-016	83
030-2488-017	83
030-8848-020	187, 195
030-8882-002	187, 195
031-1007-052-05	195
031-1147-002	195
031-8787-020	187, 195
031-8843-001	187, 195
031-8902-000	195
031-8902-001	187
031-8944-000	187, 195
070051-0000	89
070064-0002	88
075-0354-003	218
110238-1012	84
110238-1013	84
110238-1014	84
110238-1015	84
248-2967-000	95
249-2271-000	84
249-2272-000	84
250-8501-004	201
250-8501-009	201
250-8501-010	201
250-8501-013	201
259-8760-000	207
274-5016-002	187
274-7003-000	187
274-7048-000	187
304-0444-000	84
304-8810-000	40, 82
304-8811-000	40, 82
304-8812-000	40, 82
304-8813-000	40, 82
323-7010-000	187
330-5291-081-02	195
330-8753-101	41
330-8753-102	41
330-8753-103	41
330-8754-101	41
330-8754-102	41
330-8754-103	41
330-8782-001	187, 195
330-8944-000	195
330-8944-001	187
980-0005-722	187
980-0008-135	83
980-0008-136	83
980-2000-345	202
980-2000-346	202
980-2000-347	202
980-2000-348	202
980-2000-349	202
980-2000-426	187
980-2000-858	209
980-2000-859	209
980-2000-860	211
980-2000-923	83
980-2000-924	83
980-2000-925	83
980-2000-926	83
980-2000-943	83
980-2000-944	83
980-2000-945	83
980-2000-946	83
995-0001-244	187
995-0001-325	187
995-0001-584	187
995-0001-585	187
995-0001-604	187
995-0001-739	187
995-0001-761	85
995-2000-000	83
995-2000-092	211
995-2000-094	84
995-2000-110	85
ABT-607	84
CA111972-11	98
CA111972-12	98
CA111972-22	98
CA112104	102
CA112104-1	102
CA112104-2	102
CA112104-3	102
CA112104-4	102
CA112104-5	102
CCTP-750HM	84
CCTP-DM	84
D110277	212
D110278	212
D110279	212
D110280	212
D110550	213
D110551	213
D115418-70	195
D115433-1	40, 82
D115433-2	40, 82
D115433-3	40, 82
D121073-19	201
D121073-39	209
D121073-40	209
D121073-41	209
D121073-42	209
D130322-1	84
D130322-2	84
D130322-6	84
D130344	84
D130344-1	84
D130344-2	84
D130356	85
D130356-1	85
D130356-3	85
D130357	85
D130357-1	85
D130357-4	85
D20418-101	194-195
D20418-2	209
D20418-39	209
D20418-50	209
D20418-52	194-195
D20418-70	194
D20418-74	209
D20418-80	209
D20419	208
D20419-104	208
D20419-18	208
D20419-21	208
D20419-48	194-195
D20419-73	194-195
D20419-74	194-195
D20419-84	194-195
D20420	208
D20420-13	208
D20420-15	208
D20420-49	194-195
D20420-63	194-195
D20420-67	194-195
D20420-86	208
D20420-88	194-195
DA-59-20	195, 218
DA-60-20	195, 218
DA111806-1	216
DA111806-5	216
DA111810	216
DA111810-3	216
DA115339-1	207
DA115339-21	205
DA115386-104A	195
DA115386-2B	207
DA121073-150	200
DA121073-50	200
DA15P-0L2-K87	10
DA15P-1A5N-K87	26
DA15P-1A6N-K87	26
DA15P-1A7N-K87	22
DA15P-1A8N-K87	22
DA15P-1A9N-K87	22
DA15P-1ADN-K87	24
DA15P-1AFN-K87	22
DA15P-1AJN-K87	24
DA15P-1AON-K87	20
DA15P-1ATN-K87	26
DA15P-1AUN-K87	26
DA15P-1AVN-K87	24
DA15P-1AWN-K87	24
DA15P-F179A-K87	12
DA15PK87	32
DA15S-0L2-A197	11
DA15S-1A5N-A197	27
DA15S-1A6N-A197	27
DA15S-1A7N-A197	23
DA15S-1A8N-A197	23
DA15S-1A9N-A197	23
DA15S-1ADN-A197	25
DA15S-1AFN-A197	23
DA15S-1AJN-A197	25
DA15S-1AON-A197	21
DA15S-1ATN-A197	27
DA15S-1AUN-A197	27
DA15S-1AVN-A197	25
DA15S-1AWN-A197	25
DA15S-F179A-A197	13
DA15SA197	33
DA19678-1	204
DA19678-157	195
DA19678-167	193, 195
DA19678-174	195
DA19977-1	204
DA19977-40	193, 195
DA20961	203
DA20961-16	192
DA22213	215
DA22214	214
DA24658	203
DA24658-15	192, 195
DA50905-1	218
DA51210	206
DA51211	206
DA51220-1	210
DA53750-1	218
DAA11W1PK87F0	80
DAA11W1SA197F0	81
DAA15PK87F0	36
DAA15SA197F0	37
DAA3W3PK87F0	80
DAA3W3SA197F0	81
DAA7W2PK87F0	80
DAA7W2SA197F0	81
DABS-15	205
DABU111512	216
DAE15P-0L2-K87-146	10
DAE15PK87	32
DAE15S-0L2-A197-146	11
DAE15SA197	33
DAJK15P*-1A0N	110
DAJK15P*-1A5N	118
DAJK15P*-1A6N	118
DAJK15P*-1A7N	114
DAJK15P*-1A8N	114
DAJK15P*-1A9N	114
DAJK15P*-1ADN	116
DAJK15P*-1AFN	114
DAJK15P*-1AGN	116
DAJK15P*-1AHN	114
DAJK15P*-1AJN	116
DAJK15P*-1APN	118
DAJK15P*-1ATN	118
DAJK15P*-1AUN	118
DAJK15P*-1AVN	116
DAJK15P*-1AWN	116
DAJK15P*-1U0N	108
DAJK15P*-1U7N	112
DAJK15P*-1U7N-146	112
DAJK15P*-OL4	120
DAJK15S*-1A0N	111
DAJK15S*-1A5N	119
DAJK15S*-1A6N	119
DAJK15S*-1A7N	115
DAJK15S*-1A8N	115
DAJK15S*-1A9N	115
DAJK15S*-1ADN	117
DAJK15S*-1AFN	115
DAJK15S*-1AGN	117
DAJK15S*-1AHN	115
DAJK15S*-1AJN	117
DAJK15S*-1APN	119
DAJK15S*-1ATN	119
DAJK15S*-1AUN	119
DAJK15S*-1AVN	117
DAJK15S*-1AWN	117
DAJK15S*-1U0N	109
DAJK15S*-1U7N	113
DAJK15S*-1U7N-146	113
DAJK15S*-OL4	121
DAJKE15P*-1A0N	110
DAJKE15P*-1U0N	108
DAJKE15P*-OL4	120
DAJKE15P*-OL4-146	120
DAJKE15S*-1A0N	111
DAJKE15S*-1U0N	109
DAJKE15S*-OL4	121
DAJKE15S*-OL4-146	121
DAJKX15P*-1A0N	110
DAJKX15P*-OL4	120
DAJKX15P*-OL4-146	120
DAJKX15S*-1A0N	111
DAJKX15S*-OL4	121
DAJKX15S*-OL4-146	121
DAJT15P	122
DAJT15S*	123
DAJT3W3P1	128
DAJT3W3P1-1A0N	124
DAJT3W3P1-OL4	126
DAJT3W3P5	128
DAJT3W3P5-1A0N	124
DAJT3W3P5-OL4	126
DAJT3W3P6	128
DAJT3W3P6-1A0N	124
DAJT3W3P6-OL4	126
DAJT3W3P9	128
DAJT3W3P9-1A0N	124
DAJT3W3P9-OL4	126
DAJT3W3S1	129
DAJT3W3S1-1A0N	125
DAJT3W3S1-OL4	127
DAJT3W3S5	129
DAJT3W3S5-1A0N	125
DAJT3W3S5-OL4	127
DAJT3W3S6	129
DAJT3W3S6-1A0N	125
DAJT3W3S6-OL4	127
DAJT3W3S9	129
DAJT3W3S9-1A0N	125
DAJT3W3S9-OL4	127
DAJT3WK3P1	128
DAJT3WK3P1-1A0N	124
DAJT3WK3P1-OL4	126
DAJT3WK3P5	128
DAJT3WK3P5-1A0N	124
DAJT3WK3P5-OL4	126
DAJT3WK3P6	128
DAJT3WK3P6-1A0N	124
DAJT3WK3P6-OL4	126
DAJT3WK3P9	128
DAJT3WK3P9-1A0N	124
DAJT3WK3P9-OL4	126
DAJT3WK3S1	129
DAJT3WK3S1-1A0N	125
DAJT3WK3S1-OL4	127
DAJT3WK3S5	129
DAJT3WK3S5-1A0N	125
DAJT3WK3S5-OL4	127
DAJT3WK3S6	129
DAJT3WK3S6-1A0N	125
DAJT3WK3S6-OL4	127
DAJT3WK3S9	129
DAJT3WK3S9-1A0N	125
DAJT3WK3S9-OL4	127
DAJTE15P	122
DAJTE15S*	123
DAJTE3W3P1	128
DAJTE3W3P1-1A0N	124
DAJTE3W3P1-OL4	126
DAJTE3W3P5	128
DAJTE3W3P5-1A0N	124
DAJTE3W3P5-OL4	126
DAJTE3W3P6	128

Part Number	Page
DAJTE3W3P6-1A0N	124
DAJTE3W3P6-OL4	126
DAJTE3W3P9	128
DAJTE3W3P9-1A0N	124
DAJTE3W3P9-OL4	126
DAJTE3W3S1	129
DAJTE3W3S1-1A0N	125
DAJTE3W3S1-OL4	127
DAJTE3W3S5	129
DAJTE3W3S5-1A0N	125
DAJTE3W3S5-OL4	127
DAJTE3W3S6	129
DAJTE3W3S6-1A0N	125
DAJTE3W3S6-OL4	127
DAJTE3W3S9	129
DAJTE3W3S9-1A0N	125
DAJTE3W3S9-OL4	127
DAJTE3WK3P1	128
DAJTE3WK3P1-1A0N	124
DAJTE3WK3P1-OL4	126
DAJTE3WK3P5	128
DAJTE3WK3P5-1A0N	124
DAJTE3WK3P5-OL4	126
DAJTE3WK3P6	128
DAJTE3WK3P6-1A0N	124
DAJTE3WK3P6-OL4	126
DAJTE3WK3P9	128
DAJTE3WK3P9-1A0N	124
DAJTE3WK3P9-OL4	126
DAJTE3WK3S1	129
DAJTE3WK3S1-1A0N	125
DAJTE3WK3S1-OL4	127
DAJTE3WK3S5	129
DAJTE3WK3S5-1AON	125
DAJTE3WK3S5-OL4	127
DAJTE3WK3S6	129
DAJTE3WK3S6-1A0N	125
DAJTE3WK3S6-OL4	127
DAJTE3WK3S9	129
DAJTE3WK3S9-1A0N	125
DAJTE3WK3S9-OL4	127
DAJTX15P	122
DAJTX15S*	123
DAJTX3WKP1-1A0N	124
DAJTX3W3P1	128
DAJTX3W3P1-1A0N	124
DAJTX3W3P1-OL4	126
DAJTX3W3P5	128
DAJTX3W3P5-1A0N	124
DAJTX3W3P5-OL4	126
DAJTX3W3P6	128
DAJTX3W3P6-1A0N	124
DAJTX3W3P6-OL4	126
DAJTX3W3P9	128
DAJTX3W3P9-1A0N	124
DAJTX3W3P9-OL4	126
DAJTX3W3S1	129
DAJTX3W3S1-1A0N	125
DAJTX3W3S1-OL4	127
DAJTX3W3S5	129
DAJTX3W3S5-1AON	125
DAJTX3W3S5-OL4	127
DAJTX3W3S6	129
DAJTX3W3S6-1A0N	125
DAJTX3W3S6-OL4	127
DAJTX3W3S9	129
DAJTX3W3S9-1A0N	125
DAJTX3W3S9-OL4	127
DAJTX3WK3P1	128
DAJTX3WK3P1-OL4	126
DAJTX3WK3P5	128
DAJTX3WK3P5-1A0N	124
DAJTX3WK3P5-OL4	126
DAJTX3WK3P6	128
DAJTX3WK3P6-1A0N	124
DAJTX3WK3P6-OL4	126
DAJTX3WK3P9	128
DAJTX3WK3P9-1A0N	124
DAJTX3WK3P9-OL4	126
DAJTX3WK3S1	129
DAJTX3WK3S1-1A0N	125
DAJTX3WK3S1-OL4	127
DAJTX3WK3S5	129
DAJTX3WK3S5-1AON	125
DAJTX3WK3S5-OL4	127
DAJTX3WK3S6	129
DAJTX3WK3S6-1A0N	125
DAJTX3WK3S6-OL4	127
DAJTX3WK3S9	129
DAJTX3WK3S9-1A0N	125
DAJTX3WK3S9-OL4	127
DAM-11W1P-1A0N-K87	74
DAM-11W1P-1A7N-K87	74
DAM-11W1P-NMB-76	195
DAM-11W1P-NMB-77	195
DAM-11W1P-NMC-76	195
DAM-11W1P-NMC-77	195
DAM-11W1P-OL2-K87	76
DAM-11W1P-OL4-K87	76
DAM-11W1S-1A0N-A197	75
DAM-11W1S-1A7N-A197	75
DAM-11W1S-NMB-76	195
DAM-11W1S-NMB-77	195
DAM-11W1S-NMC-76	195
DAM-11W1S-NMC-77	195
DAM-11W1S-OL2-A197	77
DAM-11W1S-OL4-A197	77
DAM-15S-NMB-76	195
DAM-15S-NMC-76	195
DAM-3W3P-1A0N-K87	74
DAM-3W3P-1A7N-K87	74
DAM-3W3P-NMB-76	195
DAM-3W3P-NMC-76	195
DAM-3W3P-OL2-K87	76
DAM-3W3P-OL4-K87	76
DAM-3W3S-1A0N-A197	75
DAM-3W3S-1A7N-A197	75
DAM-3W3S-NMC-76	195
DAM-3W3S-OL2-A197	77
DAM-3W3S-OL4-A197	77
DAM-3WK3P-1A0N-K87	74
DAM-3WK3P-1A7N-K87	74
DAM-3WK3P-OL2-K87	76
DAM-3WK3P-OL4-K87	76
DAM-3WK3S-1A0N-A197	75
DAM-3WK3S-1A7N-A197	75
DAM-3WK3S-OL2-A197	77
DAM-3WK3S-OL4-A197	77
DAM-7W2P-1A0N-K87	74
DAM-7W2P-1A7N-K87	74
DAM-7W2P-NMB-76	195
DAM-7W2P-NMB-77	195
DAM-7W2P-NMC-76	195
DAM-7W2P-OL2-K87	76
DAM-7W2P-OL4-K87	76
DAM-7W2S-1A0N-A197	75
DAM-7W2S-1A7N-A197	75
DAM-7W2S-NMB-77	195
DAM-7W2S-NMC-76	195
DAM-7W2S-OL2-A197	77
DAM-7W2S-OL4-A197	77
DAM11W1P1A0NNMBK52	195
DAM11W1P1A7NNMBK52	195
DAM11W1P1A9NNMBK52	195
DAM11W1PF179ANMBK52	195
DAM11W1PK87	78
DAM11W1PNM	188
DAM11W1PNMBK52	195
DAM11W1POL3NMBK52	195
DAM11W1S1A0NNMBK52	195
DAM11W1S1A7NNMBK52	195
DAM11W1S1A9NNMBK52	195
DAM11W1SA197	79
DAM11W1SF179ANMBK52	195
DAM11W1SNM	189
DAM11W1SNMBK52	195
DAM11W1SOL3NMBK52	195
DAM15P	140
DAM15P1A0NNMBK52	195
DAM15P1A7NNMBK52	195
DAM15P1A9NNMBK52	195
DAM15PA	132
DAM15PB	136
DAM15PC	134
DAM15PD	132
DAM15PE	136
DAM15PF	134
DAM15PF179	138
DAM15PF179A	138
DAM15PF179ANMBK52	195
DAM15PG	132
DAM15PH	136
DAM15PK	134
DAM15PL	132
DAM15PLNM	174
DAM15PM	136
DAM15PNM	180
DAM15PNM*1A7N	178
DAM15PNM*1A9N	178
DAM15PNM*1AON	176
DAM15PNMB76	195
DAM15PNMB77	195
DAM15PNMBK52	195
DAM15PNMC76	195
DAM15PNMC77	195
DAM15POL3NM	172
DAM15POL3NMBK52	195
DAM15PP	134
DAM15PR	134
DAM15PS	132
DAM15PW	132
DAM15PX	136
DAM15PZ	136
DAM15S	141
DAM15S1A0NNMBK52	195
DAM15S1A7NNMBK52	195
DAM15S1A9NNMBK52	195
DAM15SA	133
DAM15SB	137
DAM15SC	135
DAM15SD	133
DAM15SE	137
DAM15SF	135
DAM15SF179	139
DAM15SF179A	139
DAM15SF179ANMBK52	195
DAM15SG	133
DAM15SH	137
DAM15SK	135
DAM15SL	133
DAM15SLNM	175
DAM15SM	137
DAM15SNM	181
DAM15SNM*1A7N	179
DAM15SNM*1A9N	179
DAM15SNM*1AON	177
DAM15SNMB77	195
DAM15SNMBK52	195
DAM15SOL3NM	173
DAM15SOL3NMBK52	195
DAM15SP	135
DAM15SR	135
DAM15SS	133
DAM15SW	133
DAM15SX	137
DAM15SZ	137
DAM3W3P-NMC-77	195
DAM3W3PK87	78
DAM3W3PNM	188
DAM3W3PNMBK52	195
DAM3W3PNMC76	195
DAM3W3POL3NMBK52	195
DAM3W3S-NMC-76	195
DAM3W3SA197	79
DAM3W3SNM	189
DAM3W3SNMB76	195
DAM3W3SNMB77	195
DAM3W3SNMBK52	195
DAM3WK3PK87	78
DAM3WK3PNM	188
DAM3WK3SA197	79
DAM3WK3SNM	189
DAM53512-1405	49
DAM7W2P1A0NNMBK52	195
DAM7W2P1A7NNMBK52	195
DAM7W2P1A9NNMBK52	195
DAM7W2PF179ANMBK52	195
DAM7W2PK87	78
DAM7W2PNM	188
DAM7W2PNMBK52	195
DAM7W2POL3NMBK52	195
DAM7W2S-NMC-77	195
DAM7W2S1A0NNMBK52	195
DAM7W2S1A7NNMBK52	195
DAM7W2S1A9NNMBK52	195
DAM7W2SA197	79
DAM7W2SF179ANMBK52	195
DAM7W2SNM	189
DAM7W2SNMBK52	195
DAM7W2SOL3NMBK52	195
DAMA15PNM	182
DAMA15PNMBK52	195
DAMA15SNM	183
DAMA15SNMBK52	195
DAMA26PNM	184
DAMA26SNM	185
DAMAY15PNM	182
DAMAY15SNM	183
DAMAY26PNM	184
DAMAY26SNM	185
DAMB-11W1S-NMB-77	195
DAMB-15S-NMC-77	195
DAMB-7W2S-NMB-76	195
DAMB-7W2S-NMB-77	195
DAMB15SNMB77	195
DAMB15SNMC76	195
DAMC11C1PJK87	44
DAMC11C1PVK87	50
DAMC11C1SJA197	45
DAMC11C1SVA197	51
DAMC11H1PJK87	60
DAMC11H1SJA197	61
DAMC11P1PVK87	64
DAMC11P1SVA197	65
DAMC15PJK87	16
DAMC15SJA197	17
DAMC3C3PJK87	44
DAMC3C3PVK87	50
DAMC3C3SJA197	45
DAMC3C3SVA197	51
DAMC3CK3PJK87TM	44
DAMC3CK3PVK87TM	50
DAMC3CK3SJA197TM	45
DAMC3CK3SVA197TM	51
DAMC3H3PJK87	60
DAMC3H3SJA197	61
DAMC3HK3PJK87TM	60
DAMC3HK3SJA197TM	61
DAMC3P3PVK87	64
DAMC3P3SVA197	65
DAMC3PK3PVK87TM	64
DAMC3PK3SVA197TM	65
DAMC7C2PJK87	44
DAMC7C2PVK87	50
DAMC7C2SJA197	45
DAMC7C2SVA197	51
DAMC7H2PJK87	60
DAMC7H2SJA197	61
DAMC7P2PVK87	64
DAMC7P2SVA197	65
DAMD11C1PJK87	44
DAMD11C1PVK87	50
DAMD11C1SJA197	45
DAMD11C1SVA197	51
DAMD11H1PJK87	60
DAMD11H1SJA197	61
DAMD11P1PVK87	64
DAMD11P1SVA197	65
DAMD15PJK87	16
DAMD15SJA197	17
DAMD3C3PJK87	44
DAMD3C3PVK87	50
DAMD3C3SJA197	45
DAMD3C3SVA197	51
DAMD3CK3PJK87TM	44
DAMD3CK3PVK87TM	50
DAMD3CK3SJA197TM	45
DAMD3CK3SVA197TM	51
DAMD3H3PJK87	60
DAMD3H3SJA197	61
DAMD3HK3PJK87TM	60
DAMD3HK3SJA197TM	61

Dimensions are shown in mm (inch)
Dimensions subject to change

Part Number	Page
DAMD3P3PVK87	64
DAMD3P3SVA197	65
DAMD3PK3PVK87TM	64
DAMD3PK3SVA197TM	65
DAMD7C2PJK87	44
DAMD7C2PVK87	50
DAMD7C2SJA197	45
DAMD7C2SVA197	51
DAMD7H2PJK87	60
DAMD7H2SJA197	61
DAMD7P2PVK87	64
DAMD7P2SVA197	65
DAME11W1PK87	78
DAME11W1SA197	79
DAME15P	140
DAME15S	141
DAME3W3PK87	78
DAME3W3SA197	79
DAME3WK3PK87	78
DAME3WK3SA197	79
DAME7W2PK87	78
DAME7W2SA197	79
DAMG11C1PJK87	44
DAMG11C1PVK87	50
DAMG11C1SJA197	45
DAMG11C1SVA197	51
DAMG11H1PJK87	60
DAMG11H1SJA197	61
DAMG11P1PVK87	64
DAMG11P1SVA197	65
DAMG15PJK87	16
DAMG15SJA197	17
DAMG3C3PJK87	44
DAMG3C3PVK87	50
DAMG3C3SJA197	45
DAMG3C3SVA197	51
DAMG3CK3PJK87TM	44
DAMG3CK3PVK87TM	50
DAMG3CK3SJA197TM	45
DAMG3CK3SVA197TM	51
DAMG3H3PJK87	60
DAMG3H3SJA197	61
DAMG3HK3PJK87TM	60
DAMG3HK3SJA197TM	61
DAMG3P3PVK87	64
DAMG3P3SVA197	65
DAMG3PK3PVK87TM	64
DAMG3PK3SVA197TM	65
DAMG7C2PJK87	44
DAMG7C2PVK87	50
DAMG7C2SJA197	45
DAMG7C2SVA197	51
DAMG7H2PJK87	60
DAMG7H2SJA197	61
DAMG7P2PVK87	64
DAMG7P2SVA197	65
DAMM11W1P	166
DAMM11W1S	167
DAMM15P	140
DAMM15PA	132
DAMM15PB	136
DAMM15PC	134
DAMM15PD	132
DAMM15PE	136
DAMM15PF	134
DAMM15PF179	138
DAMM15PF179A	138
DAMM15PG	132
DAMM15PH	136
DAMM15PK	134
DAMM15PL	132
DAMM15PM	136
DAMM15PP	134
DAMM15PR	134
DAMM15PS	132
DAMM15PW	132
DAMM15PX	136
DAMM15PZ	136
DAMM15S	141
DAMM15SA	133
DAMM15SB	137
DAMM15SC	135
DAMM15SD	133
DAMM15SE	137
DAMM15SF	135
DAMM15SF179	139
DAMM15SF179A	139
DAMM15SG	133
DAMM15SH	137
DAMM15SK	135
DAMM15SL	133
DAMM15SM	137
DAMM15SP	135
DAMM15SR	135
DAMM15SS	133
DAMM15SW	133
DAMM15SX	137
DAMM15SZ	137
DAMM3W3P	166
DAMM3W3S	167
DAMM3WK3P	166
DAMM3WK3S	167
DAMM7W2P	166
DAMM7W2S	167
DAMMC11C1PJ	146
DAMMC11C1SJ	147
DAMMC11H1PJ	154
DAMMC11H1SJ	155
DAMMC3C3PJ	146
DAMMC3C3SJ	147
DAMMC3CK3PJ	146
DAMMC3CK3SJ	147
DAMMC3H3PJ	154
DAMMC3H3SJ	155
DAMMC3HK3PJ	154
DAMMC3HK3SJ	155
DAMMC7C2PJ	146
DAMMC7C2SJ	147
DAMMC7H2PJ	154
DAMMC7H2SJ	155
DAMMD11C1PJ	146
DAMMD11C1SJ	147
DAMMD11H1PJ	154
DAMMD11H1SJ	155
DAMMD3C3PJ	146
DAMMD3C3SJ	147
DAMMD3CK3PJ	146
DAMMD3CK3SJ	147
DAMMD3H3PJ	154
DAMMD3H3SJ	155
DAMMD3HK3PJ	154
DAMMD3HK3SJ	155
DAMMD7C2PJ	146
DAMMD7C2SJ	147
DAMMD7H2PJ	154
DAMMD7H2SJ	155
DAMME11W1P	166
DAMME11W1S	167
DAMME15P	140
DAMME15S	141
DAMME3W3P	166
DAMME3W3S	167
DAMME3WK3P	166
DAMME3WK3S	167
DAMME7W2P	166
DAMME7W2S	167
DAMMG11C1PJ	146
DAMMG11C1SJ	147
DAMMG11H1PJ	154
DAMMG11H1SJ	155
DAMMG3C3PJ	146
DAMMG3C3SJ	147
DAMMG3CK3PJ	146
DAMMG3CK3SJ	147
DAMMG3H3PJ	154
DAMMG3H3SJ	155
DAMMG3HK3PJ	154
DAMMG3HK3SJ	155
DAMMG7C2PJ	146
DAMMG7C2SJ	147
DAMMG7H2PJ	154
DAMMG7H2SJ	155
DAMMN11C1PN	150
DAMMN11C1SN	151
DAMMN11H1PN	158
DAMMN11H1SN	159
DAMMN11V1PN	162
DAMMN11V1SN	163
DAMMN3C3PN	150
DAMMN3C3SN	151
DAMMN3CK3PN	150
DAMMN3CK3SN	151
DAMMN3H3PN	158
DAMMN3H3SN	159
DAMMN3HK3PN	158
DAMMN3HK3SN	159
DAMMN3V3PN	162
DAMMN3V3SN	163
DAMMN3VK3PN	162
DAMMN3VK3SN	163
DAMMN7C2PN	150
DAMMN7C2SN	151
DAMMN7H2PN	158
DAMMN7H2SN	159
DAMMN7V2PN	162
DAMMN7V2SN	163
DAMMP11C1PJ	146
DAMMP11C1SJ	147
DAMMP11H1PJ	154
DAMMP11H1SJ	155
DAMMP3C3PJ	146
DAMMP3C3SJ	147
DAMMP3CK3PJ	146
DAMMP3CK3SJ	147
DAMMP3H3PJ	154
DAMMP3H3SJ	155
DAMMP3HK3PJ	154
DAMMP3HK3SJ	155
DAMMP7C2PJ	146
DAMMP7C2SJ	147
DAMMP7H2PJ	154
DAMMP7H2SJ	155
DAMMV11C1PN	150
DAMMV11C1SN	151
DAMMV11H1PN	158
DAMMV11H1SN	159
DAMMV11V1PN	162
DAMMV11V1SN	163
DAMMV3C3PN	150
DAMMV3C3SN	151
DAMMV3CK3PN	150
DAMMV3CK3SN	151
DAMMV3H3PN	158
DAMMV3H3SN	159
DAMMV3HK3PN	158
DAMMV3HK3SN	159
DAMMV3V3PN	162
DAMMV3V3SN	163
DAMMV3VK3PN	162
DAMMV3VK3SN	163
DAMMV7C2PN	150
DAMMV7C2SN	151
DAMMV7H2PN	158
DAMMV7H2SN	159
DAMMV7V2PN	162
DAMMV7V2SN	163
DAMMY11W1P	166
DAMMY11W1S	167
DAMMY15P	140
DAMMY15S	141
DAMMY3W3P	166
DAMMY3W3S	167
DAMMY3WK3P	166
DAMMY3WK3S	167
DAMMY7W2P	166
DAMMY7W2S	167
DAMMZ11C1PN	150
DAMMZ11C1SN	151
DAMMZ11H1PN	158
DAMMZ11H1SN	159
DAMMZ11V1PN	162
DAMMZ11V1SN	163
DAMMZ3C3PN	150
DAMMZ3C3SN	151
DAMMZ3CK3PN	150
DAMMZ3CK3SN	151
DAMMZ3H3PN	158
DAMMZ3H3SN	159
DAMMZ3HK3PN	158
DAMMZ3HK3SN	159
DAMMZ3V3PN	162
DAMMZ3V3SN	163
DAMMZ3VK3PN	162
DAMMZ3VK3SN	163
DAMMZ7C2PN	150
DAMMZ7C2SN	151
DAMMZ7H2PN	158
DAMMZ7H2SN	159
DAMMZ7V2PN	162
DAMMZ7V2SN	163
DAMN11C1PNK87	52
DAMN11C1PYK87	56
DAMN11C1SNA197	53
DAMN11C1SYA197	57
DAMN11H1PNK87	66
DAMN11H1PYK87	70
DAMN11H1SNA197	67
DAMN11H1SYA197	71
DAMN15PNK87	6
DAMN15SNA197	7
DAMN3C3PNK87	52
DAMN3C3PYK87	56
DAMN3C3SNA197	53
DAMN3C3SYA197	57
DAMN3CK3PNK87TM	52
DAMN3CK3PYK87TM	56
DAMN3CK3SNA197TM	53
DAMN3CK3SYA197TM	57
DAMN3H3PNK87	66
DAMN3H3PYK87	70
DAMN3H3SNA197	67
DAMN3H3SYA197	71
DAMN3HK3PNK87TM	66
DAMN3HK3PYK87TM	70
DAMN3HK3SNA197TM	67
DAMN3HK3SYA197TM	71
DAMN7C2PNK87	52
DAMN7C2PYK87	56
DAMN7C2SNA197	53
DAMN7C2SYA197	57
DAMN7H2PNK87	66
DAMN7H2PYK87	70
DAMN7H2SNA197	67
DAMN7H2SYA197	71
DAMP11C1PJK87	44
DAMP11C1PVK87	50
DAMP11C1SJA197	45
DAMP11C1SVA197	51
DAMP11H1PJK87	60
DAMP11H1SJA197	61
DAMP11P1PVK87	64
DAMP11P1SVA197	65
DAMP15PJK87	16
DAMP15SJA197	17
DAMP3C3PJK87	44
DAMP3C3PVK87	50
DAMP3C3SJA197	45
DAMP3C3SVA197	51
DAMP3CK3PJK87TM	44
DAMP3CK3PVK87TM	50
DAMP3CK3SJA197TM	45
DAMP3CK3SVA197TM	51
DAMP3H3PJK87	60
DAMP3H3SJA197	61
DAMP3HK3PJK87TM	60
DAMP3HK3SJA197TM	61
DAMP3P3PVK87	64
DAMP3P3SVA197	65
DAMP3PK3PVK87TM	64
DAMP3PK3SVA197TM	65
DAMP7C2PJK87	44
DAMP7C2PVK87	50
DAMP7C2SJA197	45
DAMP7C2SVA197	51
DAMP7H2PJK87	60
DAMP7H2SJA197	61
DAMP7P2PVK87	64
DAMP7P2SVA197	65
DAMV11C1PNK87	52
DAMV11C1PYK87	56
DAMV11C1SNA197	53
DAMV11C1SYA197	57

Part Number	Page
DAMV11H1PNK87	66
DAMV11H1PYK87	70
DAMV11H1SNA197	67
DAMV11H1SYA197	71
DAMV15PNK87	6
DAMV15SNA197	7
DAMV3C3PNK87	52
DAMV3C3PYK87	56
DAMV3C3SNA197	53
DAMV3C3SYA197	57
DAMV3CK3PNK87TM	52
DAMV3CK3PYK87TM	56
DAMV3CK3SNA197TM	53
DAMV3CK3SYA197TM	57
DAMV3H3PNK87	66
DAMV3H3PYK87	70
DAMV3H3SNA197	67
DAMV3H3SYA197	71
DAMV3HK3PNK87TM	66
DAMV3HK3PYK87TM	70
DAMV3HK3SNA197TM	67
DAMV3HK3SYA197TM	71
DAMV7C2PNK87	52
DAMV7C2PYK87	56
DAMV7C2SNA197	53
DAMV7C2SYA197	57
DAMV7H2PNK87	66
DAMV7H2PYK87	70
DAMV7H2SNA197	67
DAMV7H2SYA197	71
DAMY11W1PK87	78
DAMY11W1PNM	188
DAMY11W1SA197	79
DAMY11W1SNM	189
DAMY15P	140
DAMY15PNM	180
DAMY15PNM*1AON	176
DAMY15POL3NM	172
DAMY15S	141
DAMY15SNM	181
DAMY15SNM*1AON	177
DAMY15SOL3NM	173
DAMY3W3PK87	78
DAMY3W3PNM	188
DAMY3W3SA197	79
DAMY3W3SNM	189
DAMY3WK3PK87	78
DAMY3WK3PNM	188
DAMY3WK3SA197	79
DAMY3WK3SNM	189
DAMY7W2PK87	78
DAMY7W2PNM	188
DAMY7W2SA197	79
DAMY7W2SNM	189
DAMZ11C1PNK87	52
DAMZ11C1PYK87	56
DAMZ11C1SNA197	53
DAMZ11C1SYA197	57
DAMZ11H1PNK87	66
DAMZ11H1PYK87	70
DAMZ11H1SNA197	67
DAMZ11H1SYA197	71
DAMZ15PNK87	6
DAMZ15SNA197	7
DAMZ3C3PNK87	52
DAMZ3C3PYK87	56
DAMZ3C3SNA197	53
DAMZ3C3SYA197	57
DAMZ3CK3PNK87TM	52
DAMZ3CK3PYK87TM	56
DAMZ3CK3SNA197TM	53
DAMZ3CK3SYA197TM	57
DAMZ3H3PNK87	66
DAMZ3H3PYK87	70
DAMZ3H3SNA197	67
DAMZ3H3SYA197	71
DAMZ3HK3PNK87TM	66
DAMZ3HK3PYK87TM	70
DAMZ3HK3SNA197TM	67
DAMZ3HK3SYA197TM	71
DAMZ7C2PNK87	52
DAMZ7C2PYK87	56
DAMZ7C2SNA197	53
DAMZ7C2SYA197	57
DAMZ7H2PNK87	66
DAMZ7H2PYK87	70
DAMZ7H2SNA197	67
DAMZ7H2SYA197	71
DANG15P-P1	4
DANG15S-P1	5
DANGE15P-P1	4
DANGE15S-P1	5
DANGL15P-P1	4
DANGL15S-P1	5
DANGX15P-P1	4
DANGX15S-P1	5
DANGZ15P-P1	4
DANGZ15S-P1	5
DAW15P*	38
DAW15P*G	38
DAW15S*	39
DAW15S*G	39
DAWE15P*	38
DAWE15P*G	38
DAWE15S*	39
DAWE15S*G	39
DAX15P-0L2-K87-146	10
DAX15PK87	32
DAX15S-0L2-A197-146	11
DAX15SA197	33
DB-59-20	195, 218
DB-60-20	195, 218
DB111807-1	216
DB111807-5	216
DB111811	216
DB111811-2	216
DB111949-43	48
DB115339-2	207
DB115339-22	205
DB115386-102A	195
DB115386-3B	207
DB121073-151	200
DB121073-51	200
DB19678-168	193, 195
DB19678-171	195
DB19678-175	195
DB19678-2	204
DB19977-2	204
DB19977-43	193, 195
DB20962	203
DB20962-18	192
DB22254	214
DB22255	215
DB24659	203
DB24659-15	192, 195
DB25P-0L2-K87	10
DB25P-1A5N-K87	26
DB25P-1A6N-K87	26
DB25P-1A7N-K87	22
DB25P-1A8N-K87	22
DB25P-1A9N-K87	22
DB25P-1ADN-K87	24
DB25P-1AFN-K87	22
DB25P-1AJN-K87	24
DB25P-1AON-K87	20
DB25P-1ATN-K87	26
DB25P-1AUN-K87	26
DB25P-1AVN-K87	24
DB25P-1AWN-K87	24
DB25P-F179A-K87	12
DB25PK87	32
DB25S-0L2-A197	11
DB25S-1A5N-A197	27
DB25S-1A6N-A197	27
DB25S-1A7N-A197	23
DB25S-1A8N-A197	23
DB25S-1A9N-A197	23
DB25S-1ADN-A197	25
DB25S-1AFN-A197	23
DB25S-1AJN-A197	25
DB25S-1AON-A197	21
DB25S-1ATN-A197	27
DB25S-1AUN-A197	27
DB25S-1AVN-A197	25
DB25S-1AWN-A197	25
DB25S-F179A-A197	13
DB25SA197	33
DB50906-1	218
DB51212	206
DB51213	206
DB51221-1	210
DB51226-1B	206
DB53750-2	218
DBA13W3PK87F0	80
DBA13W3SA197F0	81
DBA17W2PK87F0	80
DBA17W2SA197F0	81
DBA21W1PK87F0	80
DBA21W1SA197F0	81
DBA25PK87FO	36
DBA25SA197FO	37
DBA5W5PK87F0	80
DBA5W5SA197F0	81
DBA9W4PK87F0	80
DBA9W4SA197F0	81
DBBS-25	205
DBBU111511	216
DBE25P-0L2-K87-146	10
DBE25PK87	32
DBE25S-0L2-A197-146	11
DBE25SA197	33
DBJK25P*-1A0N	110
DBJK25P*-1A5N	118
DBJK25P*-1A6N	118
DBJK25P*-1A7N	114
DBJK25P*-1A8N	114
DBJK25P*-1A9N	114
DBJK25P*-1ADN	116
DBJK25P*-1AFN	114
DBJK25P*-1AGN	116
DBJK25P*-1AHN	114
DBJK25P*-1AJN	116
DBJK25P*-1APN	118
DBJK25P*-1ATN	118
DBJK25P*-1AUN	118
DBJK25P*-1AVN	116
DBJK25P*-1AWN	116
DBJK25P*-1U0N	108
DBJK25P*-1U7N	112
DBJK25P*-1U7N-146	112
DBJK25P*-OL4	120
DBJK25S*-1A0N	111
DBJK25S*-1A5N	119
DBJK25S*-1A6N	119
DBJK25S*-1A7N	115
DBJK25S*-1A8N	115
DBJK25S*-1A9N	115
DBJK25S*-1ADN	117
DBJK25S*-1AFN	115
DBJK25S*-1AGN	117
DBJK25S*-1AHN	115
DBJK25S*-1AJN	117
DBJK25S*-1APN	119
DBJK25S*-1ATN	119
DBJK25S*-1AUN	119
DBJK25S*-1AVN	117
DBJK25S*-1AWN	117
DBJK25S*-1U0N	109
DBJK25S*-1U7N	113
DBJK25S*-1U7N-146	113
DBJK25S*-OL4	121
DBJKE25P*-1A0N	110
DBJKE25P*-1U0N	108
DBJKE25P*-OL4	120
DBJKE25P*-OL4-146	120
DBJKE25S*-1A0N	111
DBJKE25S*-1U0N	109
DBJKE25S*-OL4	121
DBJKE25S*-OL4-146	121
DBJKX25P*-1A0N	110
DBJKX25P*-OL4	120
DBJKX25P*-OL4-146	120
DBJKX25S*-1A0N	111
DBJKX25S*-OL4	121
DBJKX25S*-OL4-146	121
DBJT25P	122
DBJT25S*	123
DBJTE25P	122
DBJTE25S*	123
DBJTX25P	122
DBJTX25S*	123
DBM-13W3P-1A0N-K87	74
DBM-13W3P-1A7N-K87	74
DBM-13W3P-NMB-76	195
DBM-13W3P-NMC-76	195
DBM-13W3P-OL2-K87	76
DBM-13W3P-OL4-K87	76
DBM-13W3S-1A0N-A197	75
DBM-13W3S-1A7N-A197	75
DBM-13W3S-NMB-77	195
DBM-13W3S-NMC-76	195
DBM-13W3S-OL2-A197	77
DBM-13W3S-OL4-A197	77
DBM-17W2P-1A0N-K87	74
DBM-17W2P-1A7N-K87	74
DBM-17W2P-NMB-76	195
DBM-17W2P-NMC-76	195
DBM-17W2P-OL2-K87	76
DBM-17W2P-OL4-K87	76
DBM-17W2S-1A0N-A197	75
DBM-17W2S-1A7N-A197	75
DBM-17W2S-NMC-76	195
DBM-17W2S-NMC-77	195
DBM-17W2S-OL2-A197	77
DBM-17W2S-OL4-A197	77
DBM-21W1P-1A0N-K87	74
DBM-21W1P-1A7N-K87	74
DBM-21W1P-NMB-76	195
DBM-21W1P-NMB-77	195
DBM-21W1P-OL2-K87	76
DBM-21W1P-OL4-K87	76
DBM-21W1S-1A0N-A197	75
DBM-21W1S-1A7N-A197	75
DBM-21W1S-NMB-76	195
DBM-21W1S-NMB-77	195
DBM-21W1S-NMC-76	195
DBM-21W1S-OL2-A197	77
DBM-21W1S-OL4-A197	77
DBM-25S-NMB-76	195
DBM-25S-NMC-76	195
DBM-25S-NMC-77	195
DBM-5W5P-1A0N-K87	74
DBM-5W5P-1A7N-K87	74
DBM-5W5P-NMB-76	195
DBM-5W5P-NMC-76	195
DBM-5W5P-NMC-77	195
DBM-5W5P-OL2-K87	76
DBM-5W5P-OL4-K87	76
DBM-5W5S-1A0N-A197	75
DBM-5W5S-1A7N-A197	75
DBM-5W5S-NMB-76	195
DBM-5W5S-NMB-77	195
DBM-5W5S-NMC-76	195
DBM-5W5S-NMC-77	195
DBM-5W5S-OL2-A197	77
DBM-5W5S-OL4-A197	77
DBM-9W4P-1A0N-K87	74
DBM-9W4P-1A7N-K87	74
DBM-9W4P-NMB-77	195
DBM-9W4P-NMC-76	195
DBM-9W4P-OL2-K87	76
DBM-9W4P-OL4-K87	76
DBM-9W4S-1A0N-A197	75
DBM-9W4S-1A7N-A197	75
DBM-9W4S-NMB-77	195
DBM-9W4S-NMC-76	195
DBM-9W4S-OL2-A197	77
DBM-9W4S-OL4-A197	77
DBM13W3P-NMB-77	195
DBM13W3P1A0NNMBK52	195
DBM13W3P1A7NNMBK52	195
DBM13W3P1A9NNMBK52	195
DBM13W3PF179ANMBK52	195
DBM13W3PK87	78
DBM13W3PNM	188
DBM13W3PNMBK52	195
DBM13W3POL3NMBK52	195
DBM13W3S-NMB-76	195
DBM13W3S1A0NNMBK52	195
DBM13W3S1A7NNMBK52	195
DBM13W3S1A9NNMBK52	195
DBM13W3SA197	79

Dimensions are shown in mm (inch)
Dimensions subject to change

Part Number	Page
DBM13W3SF179ANMBK52	195
DBM13W3SNM	189
DBM13W3SNMBK52	195
DBM13W3SOL3NMBK52	195
DBM17W2P-NMC-77	195
DBM17W2P1A0NNMBK52	195
DBM17W2P1A7NNMBK52	195
DBM17W2P1A9NNMBK52	195
DBM17W2PF179ANMBK52	195
DBM17W2PK87	78
DBM17W2PNM	188
DBM17W2PNMB77	195
DBM17W2PNMBK52	195
DBM17W2POL3NMBK52	195
DBM17W2S1A0NNMBK52	195
DBM17W2S1A7NNMBK52	195
DBM17W2S1A9NNMBK52	195
DBM17W2SA197	79
DBM17W2SF179ANMBK52	195
DBM17W2SNM	189
DBM17W2SNMB77	195
DBM17W2SNMBK52	195
DBM17W2SOL3NMBK52	195
DBM21W1P1A0NNMBK52	195
DBM21W1P1A7NNMBK52	195
DBM21W1P1A9NNMBK52	195
DBM21W1PF179ANMBK52	195
DBM21W1PK87	78
DBM21W1PNM	188
DBM21W1PNMBK52	195
DBM21W1POL3NMBK52	195
DBM21W1S1A0NNMBK52	195
DBM21W1S1A7NNMBK52	195
DBM21W1S1A9NNMBK52	195
DBM21W1SA197	79
DBM21W1SF179ANMBK52	195
DBM21W1SNM	189
DBM21W1SNMBK52	195
DBM21W1SOL3NMBK52	195
DBM25P	140
DBM25P1A0NNMBK52	195
DBM25P1A7NNMBK52	195
DBM25P1A9NNMBK52	195
DBM25PA	132
DBM25PB	136
DBM25PC	134
DBM25PD	132
DBM25PE	136
DBM25PF	134
DBM25PF179	138
DBM25PF179A	138
DBM25PF179ANMBK52	195
DBM25PG	132
DBM25PH	136
DBM25PK	134
DBM25PL	132
DBM25PLNM	174
DBM25PM	136
DBM25PNM	180
DBM25PNM*1A7N	178
DBM25PNM*1A9N	178
DBM25PNM*1AON	176
DBM25PNMB76	195
DBM25PNMB77	195
DBM25PNMBK52	195
DBM25PNMC76	195
DBM25PNMC77	195
DBM25POL3NM	172
DBM25POL3NMBK52	195
DBM25PP	134
DBM25PR	134
DBM25PS	132
DBM25PW	132
DBM25PX	136
DBM25PZ	136
DBM25S	141
DBM25S1A0NNMBK52	195
DBM25S1A7NNMBK52	195
DBM25S1A9NNMBK52	195
DBM25SA	133
DBM25SB	137
DBM25SC	135
DBM25SD	133
DBM25SE	137
DBM25SF	135
DBM25SF179	139
DBM25SF179A	139
DBM25SF179ANMBK52	195
DBM25SG	133
DBM25SH	137
DBM25SK	135
DBM25SL	133
DBM25SLNM	175
DBM25SM	137
DBM25SNM	181
DBM25SNM*1A7N	179
DBM25SNM*1A9N	179
DBM25SNM*1AON	177
DBM25SNMBK52	195
DBM25SOL3NM	173
DBM25SOL3NMBK52	195
DBM25SP	135
DBM25SR	135
DBM25SS	133
DBM25SW	133
DBM25SX	137
DBM25SZ	137
DBM5W5PNMB77	195
DBM5W5PNMBK52	195
DBM5W5SA197	79
DBM5W5SNM	189
DBM5W5SNMBK52	195
DBM9W4P1A0NNMBK52	195
DBM9W4P1A7NNMBK52	195
DBM9W4P1A9NNMBK52	195
DBM9W4PF179ANMBK52	195
DBM9W4PK87	78
DBM9W4PNM	188
DBM9W4PNMBK52	195
DBM9W4POL3NMBK52	195
DBM9W4S1A0NNMBK52	195
DBM9W4S1A7NNMBK52	195
DBM9W4S1A9NNMBK52	195
DBM9W4SA197	79
DBM9W4SF179ANMBK52	195
DBM9W4SNM	189
DBM9W4SNMBK52	195
DBM9W4SOL3NMBK52	195
DBMA25PNM	182
DBMA25PNMBK52	195
DBMA25SNM	183
DBMA25SNMBK52	195
DBMA44PNM	184
DBMA44SNM	185
DBMAY25PNM	182
DBMAY25SNM	183
DBMAY44PNM	184
DBMAY44SNM	185
DBMB-17W2S-NMB-76	195
DBMB-25S-NMB-76	195
DBMB-25S-NMB-77	195
DBMB-25S-NMC-77	195
DBMB25SNMC76	195
DBMC13C3PJK87	44
DBMC13C3PVK87	50
DBMC13C3SJA197	45
DBMC13C3SVA197	51
DBMC13H3PJK87	60
DBMC13H3SJA197	61
DBMC13P3PVK87	64
DBMC13P3SVA197	65
DBMC17C2PJK87	44
DBMC17C2PVK87	50
DBMC17C2SJA197	45
DBMC17C2SVA197	51
DBMC17H2PJK87	60
DBMC17H2SJA197	61
DBMC17P2PVK87	64
DBMC17P2SVA197	65
DBMC21C1PJK87	44
DBMC21C1PVK87	50
DBMC21C1SJA197	45
DBMC21C1SVA197	51
DBMC21H1PJK87	60
DBMC21H1SJA197	61
DBMC21P1PVK87	64
DBMC21P1SVA197	65
DBMC25PJK87	16
DBMC25SJA197	17
DBMC5C5PJK87	44
DBMC5C5PVK87	50
DBMC5C5SJA197	45
DBMC5C5SVA197	51
DBMC5H5PJK87	60
DBMC5H5SJA197	61
DBMC5P5PVK87	64
DBMC5P5SVA197	65
DBMC9C4PJK87	44
DBMC9C4PVK87	50
DBMC9C4SJA197	45
DBMC9C4SVA197	51
DBMC9H4PJK87	60
DBMC9H4SJA197	61
DBMC9P4PVK87	64
DBMC9P4SVA197	65
DBMD13C3PJK87	44
DBMD13C3PVK87	50
DBMD13C3SJA197	45
DBMD13C3SVA197	51
DBMD13H3PJK87	60
DBMD13H3SJA197	61
DBMD13P3PVK87	64
DBMD13P3SVA197	65
DBMD17C2PJK87	44
DBMD17C2PVK87	50
DBMD17C2SJA197	45
DBMD17C2SVA197	51
DBMD17H2PJK87	60
DBMD17H2SJA197	61
DBMD17P2PVK87	64
DBMD17P2SVA197	65
DBMD21C1PJK87	44
DBMD21C1PVK87	50
DBMD21C1SJA197	45
DBMD21C1SVA197	51
DBMD21H1PJK87	60
DBMD21H1SJA197	61
DBMD21P1PVK87	64
DBMD21P1SVA197	65
DBMD25PJK87	16
DBMD25SJA197	17
DBMD5C5PJK87	44
DBMD5C5PVK87	50
DBMD5C5SJA197	45
DBMD5C5SVA197	51
DBMD5H5PJK87	60
DBMD5H5SJA197	61
DBMD5P5PVK87	64
DBMD5P5SVA197	65
DBMD9C4PJK87	44
DBMD9C4PVK87	50
DBMD9C4SJA197	45
DBMD9C4SVA197	51
DBMD9H4PJK87	60
DBMD9H4SJA197	61
DBMD9P4PVK87	64
DBMD9P4SVA197	65
DBME13W3PK87	78
DBME13W3SA197	79
DBME17W2PK87	78
DBME17W2SA197	79
DBME21W1PK87	78
DBME21W1SA197	79
DBME25P	140
DBME25S	141
DBME5W5PK87	78
DBME5W5SA197	79
DBME9W4PK87	78
DBME9W4SA197	79
DBMG13C3PJK87	44
DBMG13C3PVK87	50
DBMG13C3SJA197	45
DBMG13C3SVA197	51
DBMG13H3PJK87	60
DBMG13H3SJA197	61
DBMG13P3PVK87	64
DBMG13P3SVA197	65
DBMG17C2PJK87	44
DBMG17C2PVK87	50
DBMG17C2SJA197	45
DBMG17C2SVA197	51
DBMG17H2PJK87	60
DBMG17H2SJA197	61
DBMG17P2PVK87	64
DBMG17P2SVA197	65
DBMG21C1PJK87	44
DBMG21C1PVK87	50
DBMG21C1SJA197	45
DBMG21C1SVA197	51
DBMG21H1PJK87	60
DBMG21H1SJA197	61
DBMG21P1PVK87	64
DBMG21P1SVA197	65
DBMG25PJK87	16
DBMG25SJA197	17
DBMG5C5PJK87	44
DBMG5C5PVK87	50
DBMG5C5SJA197	45
DBMG5C5SVA197	51
DBMG5H5PJK87	60
DBMG5H5SJA197	61
DBMG5P5PVK87	64
DBMG5P5SVA197	65
DBMG9C4PJK87	44
DBMG9C4PVK87	50
DBMG9C4SJA197	45
DBMG9C4SVA197	51
DBMG9H4PJK87	60
DBMG9H4SJA197	61
DBMG9P4PVK87	64
DBMG9P4SVA197	65
DBMM13W3P	166
DBMM13W3S	167
DBMM17W2P	166
DBMM17W2S	167
DBMM21W1P	166
DBMM21W1S	167
DBMM25P	140
DBMM25PA	132
DBMM25PB	136
DBMM25PC	134
DBMM25PD	132
DBMM25PE	136
DBMM25PF	134
DBMM25PF179	138
DBMM25PF179A	138
DBMM25PG	132
DBMM25PH	136
DBMM25PK	134
DBMM25PL	132
DBMM25PM	136
DBMM25PP	134
DBMM25PR	134
DBMM25PS	132
DBMM25PW	132
DBMM25PX	136
DBMM25PZ	136
DBMM25S	141
DBMM25SA	133
DBMM25SB	137
DBMM25SC	135
DBMM25SD	133
DBMM25SE	137
DBMM25SF	135
DBMM25SF179	139
DBMM25SF179A	139
DBMM25SG	133
DBMM25SH	137
DBMM25SK	135
DBMM25SL	133
DBMM25SM	137
DBMM25SP	135
DBMM25SR	135
DBMM25SS	133
DBMM25SW	133
DBMM25SX	137
DBMM25SZ	137
DBMM5W5S	167
DBMM9W4P	166
DBMM9W4S	167
DBMMC13C3PJ	146
DBMMC13C3SJ	147

Part Number	Page
DBMMC13H3PJ	154
DBMMC13H3SJ	155
DBMMC17C2PJ	146
DBMMC17C2SJ	147
DBMMC17H2PJ	154
DBMMC17H2SJ	155
DBMMC21C1PJ	146
DBMMC21C1SJ	147
DBMMC21H1PJ	154
DBMMC21H1SJ	155
DBMMC5C5PJ	146
DBMMC5C5SJ	147
DBMMC5H5PJ	154
DBMMC5H5SJ	155
DBMMC9C4PJ	146
DBMMC9C4SJ	147
DBMMC9H4PJ	154
DBMMC9H4SJ	155
DBMMD13C3PJ	146
DBMMD13C3SJ	147
DBMMD13H3PJ	154
DBMMD13H3SJ	155
DBMMD17C2PJ	146
DBMMD17C2SJ	147
DBMMD17H2PJ	154
DBMMD17H2SJ	155
DBMMD21C1PJ	146
DBMMD21C1SJ	147
DBMMD21H1PJ	154
DBMMD21H1SJ	155
DBMMD5C5PJ	146
DBMMD5C5SJ	147
DBMMD5H5PJ	154
DBMMD5H5SJ	155
DBMMD9C4PJ	146
DBMMD9C4SJ	147
DBMMD9H4PJ	154
DBMMD9H4SJ	155
DBMME13W3P	166
DBMME13W3S	167
DBMME17W2P	166
DBMME17W2S	167
DBMME21W1P	166
DBMME21W1S	167
DBMME25P	140
DBMME25S	141
DBMME5W5P	166
DBMME5W5S	167
DBMME9W4P	166
DBMME9W4S	167
DBMMG13C3PJ	146
DBMMG13C3SJ	147
DBMMG13H3PJ	154
DBMMG13H3SJ	155
DBMMG17C2PJ	146
DBMMG17C2SJ	147
DBMMG17H2PJ	154
DBMMG17H2SJ	155
DBMMG21C1PJ	146
DBMMG21C1SJ	147
DBMMG21H1PJ	154
DBMMG21H1SJ	155
DBMMG5C5PJ	146
DBMMG5C5SJ	147
DBMMG5H5PJ	154
DBMMG5H5SJ	155
DBMMG9C4PJ	146
DBMMG9C4SJ	147
DBMMG9H4PJ	154
DBMMG9H4SJ	155
DBMMN13C3PN	150
DBMMN13C3SN	151
DBMMN13H3PN	158
DBMMN13H3SN	159
DBMMN13V3PN	162
DBMMN13V3SN	163
DBMMN17C2PN	150
DBMMN17C2SN	151
DBMMN17H2PN	158
DBMMN17H2SN	159
DBMMN17V2PN	162
DBMMN17V2SN	163
DBMMN21C1PN	150
DBMMN21C1SN	151
DBMMN21H1PN	158
DBMMN21H1SN	159
DBMMN21V1PN	162
DBMMN21V1SN	163
DBMMN5C5PN	150
DBMMN5C5SN	151
DBMMN5H5PN	158
DBMMN5H5SN	159
DBMMN5V5PN	162
DBMMN5V5SN	163
DBMMN9C4PN	150
DBMMN9C4SN	151
DBMMN9H4PN	158
DBMMN9H4SN	159
DBMMN9V4PN	162
DBMMN9V4SN	163
DBMMP13C3PJ	146
DBMMP13C3SJ	147
DBMMP13H3PJ	154
DBMMP13H3SJ	155
DBMMP17C2PJ	146
DBMMP17C2SJ	147
DBMMP17H2PJ	154
DBMMP17H2SJ	155
DBMMP21C1PJ	146
DBMMP21C1SJ	147
DBMMP21H1PJ	154
DBMMP21H1SJ	155
DBMMP5C5PJ	146
DBMMP5C5SJ	147
DBMMP5H5PJ	154
DBMMP5H5SJ	155
DBMMP5W5P	166
DBMMP9C4PJ	146
DBMMP9C4SJ	147
DBMMP9H4PJ	154
DBMMP9H4SJ	155
DBMMV13C3PN	150
DBMMV13C3SN	151
DBMMV13H3PN	158
DBMMV13H3SN	159
DBMMV13V3PN	162
DBMMV13V3SN	163
DBMMV17C2PN	150
DBMMV17C2SN	151
DBMMV17H2PN	158
DBMMV17H2SN	159
DBMMV17V2PN	162
DBMMV17V2SN	163
DBMMV21C1PN	150
DBMMV21C1SN	151
DBMMV21H1PN	158
DBMMV21H1SN	159
DBMMV21V1PN	162
DBMMV21V1SN	163
DBMMV5C5PN	150
DBMMV5C5SN	151
DBMMV5H5PN	158
DBMMV5H5SN	159
DBMMV5V5PN	162
DBMMV5V5SN	163
DBMMV9C4PN	150
DBMMV9C4SN	151
DBMMV9H4PN	158
DBMMV9H4SN	159
DBMMV9V4PN	162
DBMMV9V4SN	163
DBMMY13W3P	166
DBMMY13W3S	167
DBMMY17W2P	166
DBMMY17W2S	167
DBMMY21W1P	166
DBMMY21W1S	167
DBMMY25P	140
DBMMY25S	141
DBMMY5W5P	166
DBMMY5W5S	167
DBMMY9W4P	166
DBMMY9W4S	167
DBMMZ13C3PN	150
DBMMZ13C3SN	151
DBMMZ13H3PN	158
DBMMZ13H3SN	159
DBMMZ13V3PN	162
DBMMZ13V3SN	163
DBMMZ17C2PN	150
DBMMZ17C2SN	151
DBMMZ17H2PN	158
DBMMZ17H2SN	159
DBMMZ17V2PN	162
DBMMZ17V2SN	163
DBMMZ21C1PN	150
DBMMZ21C1SN	151
DBMMZ21H1PN	158
DBMMZ21H1SN	159
DBMMZ21V1PN	162
DBMMZ21V1SN	163
DBMMZ5C5PN	150
DBMMZ5C5SN	151
DBMMZ5H5PN	158
DBMMZ5H5SN	159
DBMMZ5V5PN	162
DBMMZ5V5SN	163
DBMMZ9C4PN	150
DBMMZ9C4SN	151
DBMMZ9H4PN	158
DBMMZ9H4SN	159
DBMMZ9V4PN	162
DBMMZ9V4SN	163
DBMN13C3PNK87	52
DBMN13C3PYK87	56
DBMN13C3SNA197	53
DBMN13C3SYA197	57
DBMN13H3PNK87	66
DBMN13H3PYK87	70
DBMN13H3SNA197	67
DBMN13H3SYA197	71
DBMN17C2PNK87	52
DBMN17C2PYK87	56
DBMN17C2SNA197	53
DBMN17C2SYA197	57
DBMN17H2PNK87	66
DBMN17H2PYK87	70
DBMN17H2SNA197	67
DBMN17H2SYA197	71
DBMN21C1PNK87	52
DBMN21C1PYK87	56
DBMN21C1SNA197	53
DBMN21C1SYA197	57
DBMN21H1PNK87	66
DBMN21H1PYK87	70
DBMN21H1SNA197	67
DBMN21H1SYA197	71
DBMN25PNK87	6
DBMN25SNA197	7
DBMN5C5PNK87	52
DBMN5C5PYK87	56
DBMN5C5SNA197	53
DBMN5C5SYA197	57
DBMN5H5PNK87	66
DBMN5H5PYK87	70
DBMN5H5SNA197	67
DBMN5H5SYA197	71
DBMN9C4PNK87	52
DBMN9C4PYK87	56
DBMN9C4SNA197	53
DBMN9C4SYA197	57
DBMN9H4PNK87	66
DBMN9H4PYK87	70
DBMN9H4SNA197	67
DBMN9H4SYA197	71
DBMP13C3PJK87	44
DBMP13C3PVK87	50
DBMP13C3SJA197	45
DBMP13C3SVA197	51
DBMP13H3PJK87	60
DBMP13H3SJA197	61
DBMP13P3PVK87	64
DBMP13P3SVA197	65
DBMP17C2PJK87	44
DBMP17C2PVK87	50
DBMP17C2SJA197	45
DBMP17C2SVA197	51
DBMP17H2PJK87	60
DBMP17H2SJA197	61
DBMP17P2PVK87	64
DBMP17P2SVA197	65
DBMP21C1PJK87	44
DBMP21C1PVK87	50
DBMP21C1SJA197	45
DBMP21C1SVA197	51
DBMP21H1PJK87	60
DBMP21H1SJA197	61
DBMP21P1PVK87	64
DBMP21P1SVA197	65
DBMP25PJK87	16
DBMP25SJA197	17
DBMP5C5PJK87	44
DBMP5C5PVK87	50
DBMP5C5SJA197	45
DBMP5C5SVA197	51
DBMP5H5PJK87	60
DBMP5H5SJA197	61
DBMP5P5PVK87	64
DBMP5P5SVA197	65
DBMP5W5PK87	78
DBMP5W5PNM	188
DBMP9C4PJK87	44
DBMP9C4PVK87	50
DBMP9C4SJA197	45
DBMP9C4SVA197	51
DBMP9H4PJK87	60
DBMP9H4SJA197	61
DBMP9P4PVK87	64
DBMP9P4SVA197	65
DBMV13C3PNK87	52
DBMV13C3PYK87	56
DBMV13C3SNA197	53
DBMV13C3SYA197	57
DBMV13H3PNK87	66
DBMV13H3PYK87	70
DBMV13H3SNA197	67
DBMV13H3SYA197	71
DBMV17C2PNK87	52
DBMV17C2PYK87	56
DBMV17C2SNA197	53
DBMV17C2SYA197	57
DBMV17H2PNK87	66
DBMV17H2PYK87	70
DBMV17H2SNA197	67
DBMV17H2SYA197	71
DBMV21C1PNK87	52
DBMV21C1PYK87	56
DBMV21C1SNA197	53
DBMV21C1SYA197	57
DBMV21H1PNK87	66
DBMV21H1PYK87	70
DBMV21H1SNA197	67
DBMV21H1SYA197	71
DBMV25PNK87	6
DBMV25SNA197	7
DBMV5C5PNK87	52
DBMV5C5PYK87	56
DBMV5C5SNA197	53
DBMV5C5SYA197	57
DBMV5H5PNK87	66
DBMV5H5PYK87	70
DBMV5H5SNA197	67
DBMV5H5SYA197	71
DBMV9C4PNK87	52
DBMV9C4PYK87	56
DBMV9C4SNA197	53
DBMV9C4SYA197	57
DBMV9H4PNK87	66
DBMV9H4PYK87	70
DBMV9H4SNA197	67
DBMV9H4SYA197	71
DBMY13W3PK87	78
DBMY13W3PNM	188
DBMY13W3SA197	79
DBMY13W3SNM	189
DBMY17W2PK87	78
DBMY17W2PNM	188
DBMY17W2SA197	79
DBMY17W2SNM	189
DBMY21W1PK87	78
DBMY21W1PNM	188
DBMY21W1SA197	79

Dimensions are shown in mm (inch)
Dimensions subject to change

Part Number	Page
DBMY21W1SNM	189
DBMY25P	140
DBMY25PNM	180
DBMY25PNM*1A0N	176
DBMY25POL3NM	172
DBMY25S	141
DBMY25SNM	181
DBMY25SNM*1A0N	177
DBMY25SOL3NM	173
DBMY5W5PK87	78
DBMY5W5PNM	188
DBMY5W5SA197	79
DBMY5W5SNM	189
DBMY9W4PK87	78
DBMY9W4PNM	188
DBMY9W4SA197	79
DBMY9W4SNM	189
DBMZ13C3PNK87	52
DBMZ13C3PYK87	56
DBMZ13C3SNA197	53
DBMZ13C3SYA197	57
DBMZ13H3PNK87	66
DBMZ13H3PYK87	70
DBMZ13H3SNA197	67
DBMZ13H3SYA197	71
DBMZ17C2PNK87	52
DBMZ17C2PYK87	56
DBMZ17C2SNA197	53
DBMZ17C2SYA197	57
DBMZ17H2PNK87	66
DBMZ17H2PYK87	70
DBMZ17H2SNA197	67
DBMZ17H2SYA197	71
DBMZ21C1PNK87	52
DBMZ21C1PYK87	56
DBMZ21C1SNA197	53
DBMZ21C1SYA197	57
DBMZ21H1PNK87	66
DBMZ21H1PYK87	70
DBMZ21H1SNA197	67
DBMZ21H1SYA197	71
DBMZ25PNK87	6
DBMZ25SNA197	7
DBMZ5C5PNK87	52
DBMZ5C5PYK87	56
DBMZ5C5SNA197	53
DBMZ5C5SYA197	57
DBMZ5H5PNK87	66
DBMZ5H5PYK87	70
DBMZ5H5SNA197	67
DBMZ5H5SYA197	71
DBMZ9C4PNK87	52
DBMZ9C4PYK87	56
DBMZ9C4SNA197	53
DBMZ9C4SYA197	57
DBMZ9H4PNK87	66
DBMZ9H4PYK87	70
DBMZ9H4SNA197	67
DBMZ9H4SYA197	71
DBNG25P-P1	4
DBNG25S-P1	5
DBNGE25P-P1	4
DBNGE25S-P1	5
DBNGL25P-P1	4
DBNGL25S-P1	5
DBNGX25P-P1	4
DBNGX25S-P1	5
DBNGZ25P-P1	4
DBNGZ25S-P1	5
DBW25P*	38
DBW25P*G	38
DBW25S*	39
DBW25S*G	39
DBWE25P*	38
DBWE25P*G	38
DBWE25S*	39
DBWE25S*G	39
DBX25P-0L2-K87-146	10
DBX25PK87	32
DBX25S-0L2-A197-146	11
DBX25SA197	33
DC-59-20	195, 218
DC-60-20	195, 218
DC111808-1	216
DC111808-5	216
DC115339-23	205
DC115339-3	207
DC115386-100A	195
DC115386-4B	207
DC121073-152	200
DC121073-52	200
DC19678-138	193, 195
DC19678-162	195
DC19678-173	195
DC19678-3	204
DC19977-3	204
DC19977-45	193, 195
DC20963	203
DC20963-17	192
DC22070	215
DC22071	214
DC24660	203
DC24660-16	192, 195
DC37P-0L2-K87	10
DC37P-1A5N-K87	26
DC37P-1A6N-K87	26
DC37P-1A7N-K87	22
DC37P-1A8N-K87	22
DC37P-1A9N-K87	22
DC37P-1ADN-K87	24
DC37P-1AFN-K87	22
DC37P-1AJN-K87	24
DC37P-1A0N-K87	20
DC37P-1ATN-K87	26
DC37P-1AUN-K87	26
DC37P-1AVN-K87	24
DC37P-1AWN-K87	24
DC37P-F179A-K87	12
DC37PK87	32
DC37S-0L2-A197	11
DC37S-1A5N-A197	27
DC37S-1A6N-A197	27
DC37S-1A7N-A197	23
DC37S-1A8N-A197	23
DC37S-1A9N-A197	23
DC37S-1ADN-A197	25
DC37S-1AFN-A197	23
DC37S-1AJN-A197	25
DC37S-1A0N-A197	21
DC37S-1ATN-A197	27
DC37S-1AUN-A197	27
DC37S-1AVN-A197	25
DC37S-1AWN-A197	25
DC37S-F179A-A197	13
DC37SA197	33
DC50907-1	218
DC51214	206
DC51215	206
DC51222-1	210
DC53750-3	218
DCA21WA4PK87F0	80
DCA21WA4SA197F0	81
DCA25W3PK87F0	80
DCA37PK87FO	36
DCA37SA197FO	37
DCA8W8PK87F0	80
DCA8W8SA197F0	81
DCE37P-0L2-K87-146	10
DCE37PK87	32
DCE37S-0L2-A197-146	11
DCE37SA197	33
DCJK37P*-1A0N	110
DCJK37P*-1A5N	118
DCJK37P*-1A6N	118
DCJK37P*-1A7N	114
DCJK37P*-1A8N	114
DCJK37P*-1A9N	114
DCJK37P*-1ADN	116
DCJK37P*-1AFN	114
DCJK37P*-1AGN	116
DCJK37P*-1AHN	114
DCJK37P*-1AJN	116
DCJK37P*-1APN	118
DCJK37P*-1ATN	118
DCJK37P*-1AUN	118
DCJK37P*-1AVN	116
DCJK37P*-1AWN	116
DCJK37P*-1U0N	108
DCJK37P*-1U7N	112
DCJK37P*-1U7N-146	112
DCJK37P*-OL4	120
DCJK37S*-1A0N	111
DCJK37S*-1A5N	119
DCJK37S*-1A6N	119
DCJK37S*-1A7N	115
DCJK37S*-1A8N	115
DCJK37S*-1A9N	115
DCJK37S*-1ADN	117
DCJK37S*-1AFN	115
DCJK37S*-1AGN	117
DCJK37S*-1AHN	115
DCJK37S*-1AJN	117
DCJK37S*-1APN	119
DCJK37S*-1ATN	119
DCJK37S*-1AUN	119
DCJK37S*-1AVN	117
DCJK37S*-1AWN	117
DCJK37S*-1U0N	109
DCJK37S*-1U7N	113
DCJK37S*-1U7N-146	113
DCJK37S*-OL4	121
DCJKE37P*-1A0N	110
DCJKE37P*-1U0N	108
DCJKE37P*-OL4	120
DCJKE37P*-OL4-146	120
DCJKE37S*-1A0N	111
DCJKE37S*-1U0N	109
DCJKE37S*-OL4	121
DCJKE37S*-OL4-146	121
DCJKX37P*-1A0N	110
DCJKX37P*-OL4	120
DCJKX37P*-OL4-146	120
DCJKX37S*-1A0N	111
DCJKX37S*-OL4	121
DCJKX37S*-OL4-146	121
DCJT37P	122
DCJT37S*	123
DCJTE37P	122
DCJTE37S*	123
DCJTX37P	122
DCJTX37S*	123
DCM-13W6P-1A0N-K87	74
DCM-13W6P-1A7N-K87	74
DCM-13W6P-NMB-76	195
DCM-13W6P-NMB-77	195
DCM-13W6P-NMC-76	195
DCM-13W6P-NMC-77	195
DCM-13W6P-OL2-K87	76
DCM-13W6P-OL4-K87	76
DCM-13W6S-1A0N-A197	75
DCM-13W6S-1A7N-A197	75
DCM-13W6S-NMB-77	195
DCM-13W6S-NMC-77	195
DCM-13W6S-OL2-A197	77
DCM-13W6S-OL4-A197	77
DCM-17W5P-1A0N-K87	74
DCM-17W5P-1A7N-K87	74
DCM-17W5P-NMB-76	195
DCM-17W5P-NMC-76	195
DCM-17W5P-NMC-77	195
DCM-17W5P-OL2-K87	76
DCM-17W5P-OL4-K87	76
DCM-17W5S-1A0N-A197	75
DCM-17W5S-1A7N-A197	75
DCM-17W5S-NMB-77	195
DCM-17W5S-NMC-76	195
DCM-17W5S-NMC-77	195
DCM-17W5S-OL2-A197	77
DCM-17W5S-OL4-A197	77
DCM-21W4P-NMB-77	195
DCM-21W4S-NMB-77	195
DCM-21WA4P-1A0N-K87	74
DCM-21WA4P-1A7N-K87	74
DCM-21WA4P-NMB-77	195
DCM-21WA4P-NMC-76	195
DCM-21WA4P-OL2-K87	76
DCM-21WA4P-OL4-K87	76
DCM-21WA4S-1A0N-A197	75
DCM-21WA4S-1A7N-A197	75
DCM-21WA4S-NMB-77	195
DCM-21WA4S-OL2-A197	77
DCM-21WA4S-OL4-A197	77
DCM-25W36-NMB-77	195
DCM-25W3P-1A0N-K87	74
DCM-25W3P-1A7N-K87	74
DCM-25W3P-NMB-77	195
DCM-25W3P-OL2-K87	76
DCM-25W3P-OL4-K87	76
DCM-25W3S-1A0N-A197	75
DCM-25W3S-1A7N-A197	75
DCM-25W3S-NMC-76	195
DCM-25W3S-NMC-77	195
DCM-25W3S-OL2-A197	77
DCM-25W3S-OL4-A197	77
DCM-27W2P-1A0N-K87	74
DCM-27W2P-1A7N-K87	74
DCM-27W2P-OL2-K87	76
DCM-27W2P-OL4-K87	76
DCM-27W2S-1A0N-A197	75
DCM-27W2S-1A7N-A197	75
DCM-27W2S-NMC-76	195
DCM-27W2S-OL2-A197	77
DCM-27W2S-OL4-A197	77
DCM-37P-NMC-77	195
DCM-37S-NMB-76	195
DCM-37S-NMC-76	195
DCM-37S-NMC-77	195
DCM-8W8P-1A0N-K87	74
DCM-8W8P-1A7N-K87	74
DCM-8W8P-NMB-77	195
DCM-8W8P-NMC-77	195
DCM-8W8P-OL2-K87	76
DCM-8W8P-OL4-K87	76
DCM-8W8S-1A0N-A197	75
DCM-8W8S-1A7N-A197	75
DCM-8W8S-MNC-76	195
DCM-8W8S-NMB-77	195
DCM-8W8S-NMC-77	195
DCM-8W8S-OL2-A197	77
DCM-8W8S-OL4-A197	77
DCM13W6P1A0NNMBK52	195
DCM13W6P1A7NNMBK52	195
DCM13W6P1A9NNMBK52	195
DCM13W6PF179ANMBK52	195
DCM13W6PK87	78
DCM13W6PNM	188
DCM13W6PNMBK52	195
DCM13W6POL3NMBK52	195
DCM13W6S1A0NNMBK52	195
DCM13W6S1A7NNMBK52	195
DCM13W6S1A9NNMBK52	195
DCM13W6SA197	79
DCM13W6SF179ANMBK52	195
DCM13W6SNM	189
DCM13W6SNMBK52	195
DCM13W6SNMC76	195
DCM13W6SOL3NMBK52	195
DCM17W5P1A0NNMBK52	195
DCM17W5P1A7NNMBK52	195
DCM17W5P1A9NNMBK52	195
DCM17W5PF179ANMBK52	195
DCM17W5PK87	78
DCM17W5PNM	188
DCM17W5PNMB77	195
DCM17W5PNMBK52	195
DCM17W5POL3NMBK52	195
DCM17W5S-NMB-76	195
DCM17W5S1A0NNMBK52	195
DCM17W5S1A7NNMBK52	195
DCM17W5S1A9NNMBK52	195
DCM17W5SA197	79
DCM17W5SF179ANMBK52	195
DCM17W5SNM	189
DCM17W5SNMBK52	195
DCM17W5SOL3NMBK52	195
DCM21W4S-NMC-76	195
DCM21WA4P-NMB-76	195
DCM21WA4P1A0NNMBK52	195
DCM21WA4P1A7NNMBK52	195
DCM21WA4P1A9NNMBK52	195
DCM21WA4PF179ANMBK52	195
DCM21WA4PK87	78

Part Number	Page
DCM21WA4PNM	188
DCM21WA4PNMBK52	195
DCM21WA4POL3NMBK52	195
DCM21WA4S-NMB-76	195
DCM21WA4S1A0NNMBK52	195
DCM21WA4S1A7NNMBK52	195
DCM21WA4S1A9NNMBK52	195
DCM21WA4SA197	79
DCM21WA4SF179ANMBK52	195
DCM21WA4SNM	189
DCM21WA4SNMBK52	195
DCM21WA4SOL3NMBK52	195
DCM25W3P-NMB-76	195
DCM25W3P1A0NNMBK52	195
DCM25W3P1A7NNMBK52	195
DCM25W3P1A9NNMBK52	195
DCM25W3PF179ANMBK52	195
DCM25W3PK87	78
DCM25W3PNM	188
DCM25W3PNMBK52	195
DCM25W3POL3NMBK52	195
DCM25W3S1A0NNMBK52	195
DCM25W3S1A7NNMBK52	195
DCM25W3S1A9NNMBK52	195
DCM25W3SA197	79
DCM25W3SF179ANMBK52	195
DCM25W3SNM	189
DCM25W3SNMBK52	195
DCM25W3SOL3NMBK52	195
DCM27W2OL3NMBK52	195
DCM27W2P-NMC-76	195
DCM27W2P1A0NNMBK52	195
DCM27W2P1A7NNMBK52	195
DCM27W2P1A9NNMBK52	195
DCM27W2PF179ANMBK52	195
DCM27W2PK87	78
DCM27W2PNM	188
DCM27W2PNMBK52	195
DCM27W2POL3NMBK52	195
DCM27W2S1A0NNMBK52	195
DCM27W2S1A7NNMBK52	195
DCM27W2S1A9NNMBK52	195
DCM27W2SA197	79
DCM27W2SF179ANMBK52	195
DCM27W2SNM	189
DCM27W2SNMBK52	195
DCM37P	140
DCM37P1A0NNMBK52	195
DCM37P1A7NNMBK52	195
DCM37P1A9NNMBK52	195
DCM37PA	132
DCM37PB	136
DCM37PC	134
DCM37PD	132
DCM37PE	136
DCM37PF	134
DCM37PF179	138
DCM37PF179A	138
DCM37PF179ANMBK52	195
DCM37PG	132
DCM37PH	136
DCM37PK	134
DCM37PL	132
DCM37PLNM	174
DCM37PM	136
DCM37PNM	180
DCM37PNM*1A7N	178
DCM37PNM*1A9N	178
DCM37PNM*1AON	176
DCM37PNMB76	195
DCM37PNMB77	195
DCM37PNMBK52	195
DCM37PNMC76	195
DCM37POL3NM	172
DCM37POL3NMBK52	195
DCM37PP	134
DCM37PR	134
DCM37PS	132
DCM37PW	132
DCM37PX	136
DCM37PZ	136
DCM37S	141
DCM37S1A0NNMBK52	195
DCM37S1A7NNMBK52	195
DCM37S1A9NNMBK52	195
DCM37SA	133
DCM37SB	137
DCM37SC	135
DCM37SD	133
DCM37SE	137
DCM37SF	135
DCM37SF179	139
DCM37SF179A	139
DCM37SF179ANMBK52	195
DCM37SG	133
DCM37SH	137
DCM37SK	135
DCM37SL	133
DCM37SLNM	175
DCM37SM	137
DCM37SNM	181
DCM37SNM*1A7N	179
DCM37SNM*1A9N	179
DCM37SNM*1AON	177
DCM37SNMB77	195
DCM37SNMBK52	195
DCM37SOL3NM	173
DCM37SOL3NMBK52	195
DCM37SP	135
DCM37SR	135
DCM37SS	133
DCM37SW	133
DCM37SX	137
DCM37SZ	137
DCM50PC	134
DCM8W8PK87	78
DCM8W8PNM	188
DCM8W8PNMB76	195
DCM8W8PNMBK52	195
DCM8W8PNMC76	195
DCM8W8SA197	79
DCM8W8SNM	189
DCM8W8SNMB76	195
DCM8W8SNMBK52	195
DCMA37PNM	182
DCMA37PNMBK52	195
DCMA37SNM	183
DCMA37SNMBK52	195
DCMA62PNM	184
DCMA62SNM	185
DCMAY37PNM	182
DCMAY37SNM	183
DCMAY62PNM	184
DCMAY62SNM	185
DCMB-17W5S-NMB-76	195
DCMB-37S-NMB-77	195
DCMB-37S-NMC-77	195
DCMB37S-NMB-76	195
DCMB37S-NMC-76	195
DCMC13C6PJK87	44
DCMC13C6PVK87	50
DCMC13C6SJA197	45
DCMC13C6SVA197	51
DCMC13H6PJK87	60
DCMC13H6SJA197	61
DCMC13P6PVK87	64
DCMC13P6SVA197	65
DCMC17C5PJK87	44
DCMC17C5PVK87	50
DCMC17C5SJA197	45
DCMC17C5SVA197	51
DCMC17H5PJK87	60
DCMC17H5SJA197	61
DCMC17P5PVK87	64
DCMC17P5SVA197	65
DCMC21CA4PJK87	44
DCMC21CA4PVK87	50
DCMC21CA4SJA197	45
DCMC21CA4SVA197	51
DCMC21HA4PJK87	60
DCMC21HA4SJA197	61
DCMC21PA4PVK87	64
DCMC21PA4SVA197	65
DCMC25C3PJK87	44
DCMC25C3PVK87	50
DCMC25C3SJA197	45
DCMC25C3SVA197	51
DCMC25H3PJK87	60
DCMC25H3SJA197	61
DCMC25P3PVK87	64
DCMC25P3SVA197	65
DCMC27C2PJK87	44
DCMC27C2PVK87	50
DCMC27C2SJA197	45
DCMC27C2SVA197	51
DCMC27H2PJK87	60
DCMC27H2SJA197	61
DCMC27P2PVK87	64
DCMC27P2SVA197	65
DCMC37PJK87	16
DCMC37SJA197	17
DCMC8C8PJK87	44
DCMC8C8PVK87	50
DCMC8C8SJA197	45
DCMC8C8SVA197	51
DCMC8H8PJK87	60
DCMC8H8SJA197	61
DCMC8P8PVK87	64
DCMC8P8SVA197	65
DCMD13C6PJK87	44
DCMD13C6PVK87	50
DCMD13C6SJA197	45
DCMD13C6SVA197	51
DCMD13H6PJK87	60
DCMD13H6SJA197	61
DCMD13P6PVK87	64
DCMD13P6SVA197	65
DCMD17C5PJK87	44
DCMD17C5PVK87	50
DCMD17C5SJA197	45
DCMD17C5SVA197	51
DCMD17H5PJK87	60
DCMD17H5SJA197	61
DCMD17P5PVK87	64
DCMD17P5SVA197	65
DCMD21CA4PJK87	44
DCMD21CA4PVK87	50
DCMD21CA4SJA197	45
DCMD21CA4SVA197	51
DCMD21HA4PJK87	60
DCMD21HA4SJA197	61
DCMD21PA4PVK87	64
DCMD21PA4SVA197	65
DCMD25C3PJK87	44
DCMD25C3PVK87	50
DCMD25C3SJA197	45
DCMD25C3SVA197	51
DCMD25H3PJK87	60
DCMD25H3SJA197	61
DCMD25P3PVK87	64
DCMD25P3SVA197	65
DCMD27C2PJK87	44
DCMD27C2PVK87	50
DCMD27C2SJA197	45
DCMD27C2SVA197	51
DCMD27H2PJK87	60
DCMD27H2SJA197	61
DCMD27P2PVK87	64
DCMD27P2SVA197	65
DCMD37PJK87	16
DCMD37SJA197	17
DCMD8C8PJK87	44
DCMD8C8PVK87	50
DCMD8C8SJA197	45
DCMD8C8SVA197	51
DCMD8H8PJK87	60
DCMD8H8SJA197	61
DCMD8P8PVK87	64
DCMD8P8SVA197	65
DCME13W6PK87	78
DCME13W6SA197	79
DCME17W5PK87	78
DCME17W5SA197	79
DCME21WA4PK87	78
DCME21WA4SA197	79
DCME25W3PK87	78
DCME25W3SA197	79
DCME27W2PK87	78
DCME27W2SA197	79
DCME37P	140
DCME37S	141
DCME8W8PK87	78
DCME8W8SA197	79
DCMG13C6PJK87	44
DCMG13C6PVK87	50
DCMG13C6SJA197	45
DCMG13C6SVA197	51
DCMG13H6PJK87	60
DCMG13H6SJA197	61
DCMG13P6PVK87	64
DCMG13P6SVA197	65
DCMG17C5PJK87	44
DCMG17C5PVK87	50
DCMG17C5SJA197	45
DCMG17C5SVA197	51
DCMG17H5PJK87	60
DCMG17H5SJA197	61
DCMG17P5PVK87	64
DCMG17P5SVA197	65
DCMG21CA4PJK87	44
DCMG21CA4PVK87	50
DCMG21CA4SJA197	45
DCMG21CA4SVA197	51
DCMG21HA4PJK87	60
DCMG21HA4SJA197	61
DCMG21PA4PVK87	64
DCMG21PA4SVA197	65
DCMG25C3PJK87	44
DCMG25C3PVK87	50
DCMG25C3SJA197	45
DCMG25C3SVA197	51
DCMG25H3PJK87	60
DCMG25H3SJA197	61
DCMG25P3PVK87	64
DCMG25P3SVA197	65
DCMG27C2PJK87	44
DCMG27C2PVK87	50
DCMG27C2SJA197	45
DCMG27C2SVA197	51
DCMG27H2PJK87	60
DCMG27H2SJA197	61
DCMG27P2PVK87	64
DCMG27P2SVA197	65
DCMG37PJK87	16
DCMG37SJA197	17
DCMG8C8PJK87	44
DCMG8C8PVK87	50
DCMG8C8SJA197	45
DCMG8C8SVA197	51
DCMG8H8PJK87	60
DCMG8H8SJA197	61
DCMG8P8PVK87	64
DCMG8P8SVA197	65
DCMM13W6P	166
DCMM13W6S	167
DCMM17W5P	166
DCMM17W5S	167
DCMM21WA4P	166
DCMM21WA4S	167
DCMM24W7S	167
DCMM25W3P	166
DCMM25W3S	167
DCMM27W2P	166
DCMM27W2S	167
DCMM36W4S	167
DCMM37P	140
DCMM37PA	132
DCMM37PB	136
DCMM37PC	134
DCMM37PD	132
DCMM37PE	136
DCMM37PF	134
DCMM37PF179	138
DCMM37PF179A	138
DCMM37PG	132
DCMM37PH	136
DCMM37PK	134
DCMM37PL	132
DCMM37PM	136
DCMM37PP	134
DCMM37PR	134
DCMM37PS	132

Dimensions are shown in mm (inch)
Dimensions subject to change

Part Number	Page
DCMM37PW	132
DCMM37PX	136
DCMM37PZ	136
DCMM37S	141
DCMM37SA	133
DCMM37SB	137
DCMM37SC	135
DCMM37SD	133
DCMM37SE	137
DCMM37SF	135
DCMM37SF179	139
DCMM37SF179A	139
DCMM37SG	133
DCMM37SH	137
DCMM37SK	135
DCMM37SL	133
DCMM37SM	137
DCMM37SP	135
DCMM37SR	135
DCMM37SS	133
DCMM37SW	133
DCMM37SX	137
DCMM37SZ	137
DCMM43W2S	167
DCMM47W1S	167
DCMM8W8P	166
DCMM8W8S	167
DCMMC13C6PJ	146
DCMMC13C6SJ	147
DCMMC13H6PJ	154
DCMMC13H6SJ	155
DCMMC17C5PJ	146
DCMMC17C5SJ	147
DCMMC17H5PJ	154
DCMMC17H5SJ	155
DCMMC21CA4PJ	146
DCMMC21CA4SJ	147
DCMMC21HA4PJ	154
DCMMC21HA4SJ	155
DCMMC25C3PJ	146
DCMMC25C3SJ	147
DCMMC25H3PJ	154
DCMMC25H3SJ	155
DCMMC27C2PJ	146
DCMMC27C2SJ	147
DCMMC27H2PJ	154
DCMMC27H2SJ	155
DCMMC8C8PJ	146
DCMMC8C8SJ	147
DCMMC8H8PJ	154
DCMMC8H8SJ	155
DCMMD13C6PJ	146
DCMMD13C6SJ	147
DCMMD13H6PJ	154
DCMMD13H6SJ	155
DCMMD17C5PJ	146
DCMMD17C5SJ	147
DCMMD17H5PJ	154
DCMMD17H5SJ	155
DCMMD21CA4PJ	146
DCMMD21CA4SJ	147
DCMMD21HA4PJ	154
DCMMD21HA4SJ	155
DCMMD25C3PJ	146
DCMMD25C3SJ	147
DCMMD25H3PJ	154
DCMMD25H3SJ	155
DCMMD27C2PJ	146
DCMMD27C2SJ	147
DCMMD27H2PJ	154
DCMMD27H2SJ	155
DCMMD8C8PJ	146
DCMMD8C8SJ	147
DCMMD8H8PJ	154
DCMMD8H8SJ	155
DCMME13W6P	166
DCMME13W6S	167
DCMME17W5P	166
DCMME17W5S	167
DCMME21WA4P	166
DCMME21WA4S	167
DCMME24W7S	167
DCMME25W3P	166
DCMME25W3S	167
DCMME27W2P	166
DCMME27W2S	167
DCMME36W4S	167
DCMME37P	140
DCMME37S	141
DCMME43W2S	167
DCMME47W1S	167
DCMME8W8P	166
DCMME8W8S	167
DCMMG13C6PJ	146
DCMMG13C6SJ	147
DCMMG13H6PJ	154
DCMMG13H6SJ	155
DCMMG17C5PJ	146
DCMMG17C5SJ	147
DCMMG17H5PJ	154
DCMMG17H5SJ	155
DCMMG21CA4PJ	146
DCMMG21CA4SJ	147
DCMMG21HA4PJ	154
DCMMG21HA4SJ	155
DCMMG25C3PJ	146
DCMMG25C3SJ	147
DCMMG25H3PJ	154
DCMMG25H3SJ	155
DCMMG27C2PJ	146
DCMMG27C2SJ	147
DCMMG27H2PJ	154
DCMMG27H2SJ	155
DCMMG8C8PJ	146
DCMMG8C8SJ	147
DCMMG8H8PJ	154
DCMMG8H8SJ	155
DCMMN13C6PN	150
DCMMN13C6SN	151
DCMMN13H6PN	158
DCMMN13H6SN	159
DCMMN13V6PN	162
DCMMN13V6SN	163
DCMMN17C5PN	150
DCMMN17C5SN	151
DCMMN17H5PN	158
DCMMN17H5SN	159
DCMMN17V5PN	162
DCMMN17V5SN	163
DCMMN21CA4PN	150
DCMMN21CA4SN	151
DCMMN21HA4PN	158
DCMMN21HA4SN	159
DCMMN21VA4PN	162
DCMMN21VA4SN	163
DCMMN25C3PN	150
DCMMN25C3SN	151
DCMMN25H3PN	158
DCMMN25H3SN	159
DCMMN25V3PN	162
DCMMN25V3SN	163
DCMMN27C2PN	150
DCMMN27C2SN	151
DCMMN27H2PN	158
DCMMN27H2SN	159
DCMMN27V2PN	162
DCMMN27V2SN	163
DCMMN8C8PN	150
DCMMN8C8SN	151
DCMMN8H8PN	158
DCMMN8H8SN	159
DCMMN8V8PN	162
DCMMN8V8SN	163
DCMMP13C6PJ	146
DCMMP13C6SJ	147
DCMMP13H6PJ	154
DCMMP13H6SJ	155
DCMMP17C5PJ	146
DCMMP17C5SJ	147
DCMMP17H5PJ	154
DCMMP17H5SJ	155
DCMMP21CA4PJ	146
DCMMP21CA4SJ	147
DCMMP21HA4PJ	154
DCMMP21HA4SJ	155
DCMMP25C3PJ	146
DCMMP25C3SJ	147
DCMMP25H3PJ	154
DCMMP25H3SJ	155
DCMMP27C2PJ	146
DCMMP27C2SJ	147
DCMMP27H2PJ	154
DCMMP27H2SJ	155
DCMMP8C8PJ	146
DCMMP8C8SJ	147
DCMMP8H8PJ	154
DCMMP8H8SJ	155
DCMMV13C6PN	150
DCMMV13C6SN	151
DCMMV13H6PN	158
DCMMV13H6SN	159
DCMMV13V6PN	162
DCMMV13V6SN	163
DCMMV17C5PN	150
DCMMV17C5SN	151
DCMMV17H5PN	158
DCMMV17H5SN	159
DCMMV17V5PN	162
DCMMV17V5SN	163
DCMMV21CA4PN	150
DCMMV21CA4SN	151
DCMMV21HA4PN	158
DCMMV21HA4SN	159
DCMMV21VA4PN	162
DCMMV21VA4SN	163
DCMMV25C3PN	150
DCMMV25C3SN	151
DCMMV25H3PN	158
DCMMV25H3SN	159
DCMMV25V3PN	162
DCMMV25V3SN	163
DCMMV27C2PN	150
DCMMV27C2SN	151
DCMMV27H2PN	158
DCMMV27H2SN	159
DCMMV27V2PN	162
DCMMV27V2SN	163
DCMMV8C8PN	150
DCMMV8C8SN	151
DCMMV8H8PN	158
DCMMV8H8SN	159
DCMMV8V8PN	162
DCMMV8V8SN	163
DCMMY13W6P	166
DCMMY13W6S	167
DCMMY17W5P	166
DCMMY17W5S	167
DCMMY21WA4P	166
DCMMY21WA4S	167
DCMMY24W7S	167
DCMMY25W3P	166
DCMMY25W3S	167
DCMMY27W2P	166
DCMMY27W2S	167
DCMMY36W4S	167
DCMMY37P	140
DCMMY37S	141
DCMMY43W2S	167
DCMMY47W1S	167
DCMMY8W8P	166
DCMMY8W8S	167
DCMMZ13C6PN	150
DCMMZ13C6SN	151
DCMMZ13H6PN	158
DCMMZ13H6SN	159
DCMMZ13V6PN	162
DCMMZ13V6SN	163
DCMMZ17C5PN	150
DCMMZ17C5SN	151
DCMMZ17H5PN	158
DCMMZ17H5SN	159
DCMMZ17V5PN	162
DCMMZ17V5SN	163
DCMMZ21CA4PN	150
DCMMZ21CA4SN	151
DCMMZ21HA4PN	158
DCMMZ21HA4SN	159
DCMMZ21VA4PN	162
DCMMZ21VA4SN	163
DCMMZ25C3PN	150
DCMMZ25C3SN	151
DCMMZ25H3PN	158
DCMMZ25H3SN	159
DCMMZ25V3PN	162
DCMMZ25V3SN	163
DCMMZ27C2PN	150
DCMMZ27C2SN	151
DCMMZ27H2PN	158
DCMMZ27H2SN	159
DCMMZ27V2PN	162
DCMMZ27V2SN	163
DCMMZ8C8PN	150
DCMMZ8C8SN	151
DCMMZ8H8PN	158
DCMMZ8H8SN	159
DCMMZ8V8PN	162
DCMMZ8V8SN	163
DCMN13C6PNK87	52
DCMN13C6PYK87	56
DCMN13C6SNA197	53
DCMN13C6SYA197	57
DCMN13H6PNK87	66
DCMN13H6PYK87	70
DCMN13H6SNA197	67
DCMN13H6SYA197	71
DCMN17C5PNK87	52
DCMN17C5PYK87	56
DCMN17C5SNA197	53
DCMN17C5SYA197	57
DCMN17H5PNK87	66
DCMN17H5PYK87	70
DCMN17H5SNA197	67
DCMN17H5SYA197	71
DCMN21CA4PNK87	52
DCMN21CA4PYK87	56
DCMN21CA4SNA197	53
DCMN21CA4SYA197	57
DCMN21HA4PNK87	66
DCMN21HA4PYK87	70
DCMN21HA4SNA197	67
DCMN21HA4SYA197	71
DCMN25C3PNK87	52
DCMN25C3PYK87	56
DCMN25C3SNA197	53
DCMN25C3SYA197	57
DCMN25H3PNK87	66
DCMN25H3PYK87	70
DCMN25H3SNA197	67
DCMN25H3SYA197	71
DCMN27C2PNK87	52
DCMN27C2PYK87	56
DCMN27C2SNA197	53
DCMN27C2SYA197	57
DCMN27H2PNK87	66
DCMN27H2PYK87	70
DCMN27H2SNA197	67
DCMN27H2SYA197	71
DCMN37PNK87	6
DCMN37SNA197	7
DCMN8C8PNK87	52
DCMN8C8PYK87	56
DCMN8C8SNA197	53
DCMN8C8SYA197	57
DCMN8H8PNK87	66
DCMN8H8PYK87	70
DCMN8H8SNA197	67
DCMN8H8SYA197	71
DCMP13C6PJK87	44
DCMP13C6PVK87	50
DCMP13C6SJA197	45
DCMP13C6SVA197	51
DCMP13H6PJK87	60
DCMP13H6SJA197	61
DCMP13P6PVK87	64
DCMP13P6SVA197	65
DCMP17C5PJK87	44
DCMP17C5PVK87	50
DCMP17C5SJA197	45
DCMP17C5SVA197	51
DCMP17H5PJK87	60
DCMP17H5SJA197	61
DCMP17P5PVK87	64

Part Number	Page
DCMP17P5SVA197	65
DCMP21CA4PJK87	44
DCMP21CA4PVK87	50
DCMP21CA4SJA197	45
DCMP21CA4SVA197	51
DCMP21HA4PJK87	60
DCMP21HA4SJA197	61
DCMP21PA4PVK87	64
DCMP21PA4SVA197	65
DCMP25C3PJK87	44
DCMP25C3PVK87	50
DCMP25C3SJA197	45
DCMP25C3SVA197	51
DCMP25H3PJK87	60
DCMP25H3SJA197	61
DCMP25P3PVK87	64
DCMP25P3SVA197	65
DCMP27C2PJK87	44
DCMP27C2PVK87	50
DCMP27C2SJA197	45
DCMP27C2SVA197	51
DCMP27H2PJK87	60
DCMP27H2SJA197	61
DCMP27P2PVK87	64
DCMP27P2SVA197	65
DCMP37PJK87	16
DCMP37SJA197	17
DCMP8C8PJK87	44
DCMP8C8PVK87	50
DCMP8C8SJA197	45
DCMP8C8SVA197	51
DCMP8H8PJK87	60
DCMP8H8SJA197	61
DCMP8P8PVK87	64
DCMP8P8SVA197	65
DCMV13C6PNK87	52
DCMV13C6PYK87	56
DCMV13C6SNA197	53
DCMV13C6SYA197	57
DCMV13H6PNK87	66
DCMV13H6PYK87	70
DCMV13H6SNA197	67
DCMV13H6SYA197	71
DCMV17C5PNK87	52
DCMV17C5PYK87	56
DCMV17C5SNA197	53
DCMV17C5SYA197	57
DCMV17H5PNK87	66
DCMV17H5PYK87	70
DCMV17H5SNA197	67
DCMV17H5SYA197	71
DCMV21CA4PNK87	52
DCMV21CA4PYK87	56
DCMV21CA4SNA197	53
DCMV21CA4SYA197	57
DCMV21HA4PNK87	66
DCMV21HA4PYK87	70
DCMV21HA4SNA197	67
DCMV21HA4SYA197	71
DCMV25C3PNK87	52
DCMV25C3PYK87	56
DCMV25C3SNA197	53
DCMV25C3SYA197	57
DCMV25H3PNK87	66
DCMV25H3PYK87	70
DCMV25H3SNA197	67
DCMV25H3SYA197	71
DCMV27C2PNK87	52
DCMV27C2PYK87	56
DCMV27C2SNA197	53
DCMV27C2SYA197	57
DCMV27H2PNK87	66
DCMV27H2PYK87	70
DCMV27H2SNA197	67
DCMV27H2SYA197	71
DCMV37PNK87	6
DCMV37SNA197	7
DCMV8C8PNK87	52
DCMV8C8PYK87	56
DCMV8C8SNA197	53
DCMV8C8SYA197	57
DCMV8H8PNK87	66
DCMV8H8PYK87	70
DCMV8H8SNA197	67
DCMV8H8SYA197	71
DCMY13W6PK87	78
DCMY13W6PNM	188
DCMY13W6SA197	79
DCMY13W6SNM	189
DCMY17W5PK87	78
DCMY17W5PNM	188
DCMY17W5SA197	79
DCMY17W5SNM	189
DCMY21WA4PK87	78
DCMY21WA4PNM	188
DCMY21WA4SA197	79
DCMY21WA4SNM	189
DCMY25W3PK87	78
DCMY25W3PNM	188
DCMY25W3SA197	79
DCMY25W3SNM	189
DCMY27W2PK87	78
DCMY27W2PNM	188
DCMY27W2SA197	79
DCMY27W2SNM	189
DCMY37P	140
DCMY37PNM	180
DCMY37PNM*1AON	176
DCMY37POL3NM	172
DCMY37S	141
DCMY37SNM	181
DCMY37SNM*1AON	177
DCMY37SOL3NM	173
DCMY8W8PK87	78
DCMY8W8PNM	188
DCMY8W8SA197	79
DCMY8W8SNM	189
DCMZ13C6PNK87	52
DCMZ13C6PYK87	56
DCMZ13C6SNA197	53
DCMZ13C6SYA197	57
DCMZ13H6PNK87	66
DCMZ13H6PYK87	70
DCMZ13H6SNA197	67
DCMZ13H6SYA197	71
DCMZ17C5PNK87	52
DCMZ17C5PYK87	56
DCMZ17C5SNA197	53
DCMZ17C5SYA197	57
DCMZ17H5PNK87	66
DCMZ17H5PYK87	70
DCMZ17H5SNA197	67
DCMZ17H5SYA197	71
DCMZ21CA4PNK87	52
DCMZ21CA4PYK87	56
DCMZ21CA4SNA197	53
DCMZ21CA4SYA197	57
DCMZ21HA4PNK87	66
DCMZ21HA4PYK87	70
DCMZ21HA4SNA197	67
DCMZ21HA4SYA197	71
DCMZ25C3PNK87	52
DCMZ25C3PYK87	56
DCMZ25C3SNA197	53
DCMZ25C3SYA197	57
DCMZ25H3PNK87	66
DCMZ25H3PYK87	70
DCMZ25H3SNA197	67
DCMZ25H3SYA197	71
DCMZ27C2PNK87	52
DCMZ27C2PYK87	56
DCMZ27C2SNA197	53
DCMZ27C2SYA197	57
DCMZ27H2PNK87	66
DCMZ27H2PYK87	70
DCMZ27H2SNA197	67
DCMZ27H2SYA197	71
DCMZ37PNK87	6
DCMZ37SNA197	7
DCMZ8C8PNK87	52
DCMZ8C8PYK87	56
DCMZ8C8SNA197	53
DCMZ8C8SYA197	57
DCMZ8H8PNK87	66
DCMZ8H8PYK87	70
DCMZ8H8SNA197	67
DCNG37P-P1	4
DCNG37S-P1	5
DCNGE37P-P1	4
DCNGE37S-P1	5
DCNGL37P-P1	4
DCNGL37S-P1	5
DCNGX37P-P1	4
DCNGX37S-P1	5
DCNGZ37P-P1	4
DCNGZ37S-P1	5
DCW37P*	38
DCW37P*G	38
DCW37S*	39
DCW37S*G	39
DCWE37P*	38
DCWE37P*G	38
DCWE37S*	39
DCWE37S*G	39
DCX37P-0L2-K87-146	10
DCX37PK87	32
DCX37S-0L2-A197-146	11
DCX37SA197	33
DD-59-20	195, 218
DD-60-20	195, 218
DD115339-24	205
DD115339-4	207
DD115386-103A	195
DD121073-153	200
DD121073-53	200
DD19678-161	193, 195
DD19678-172	195
DD19678-176	195
DD19678-4	204
DD19977-4	204
DD19977-44	193, 195
DD20964	203
DD20964-19	192
DD21961	214
DD21962	215
DD24661	203
DD24661-13	192, 195
DD50908-1	218
DD50P-0L2-K87	10
DD50P-1A5N-K87	26
DD50P-1A6N-K87	26
DD50P-1A7N-K87	22
DD50P-1A8N-K87	22
DD50P-1A9N-K87	22
DD50P-1ADN-K87	24
DD50P-1AFN-K87	22
DD50P-1AJN-K87	24
DD50P-1AON-K87	20
DD50P-1ATN-K87	26
DD50P-1AUN-K87	26
DD50P-1AVN-K87	24
DD50P-1AWN-K87	24
DD50P-F179A-K87	12
DD50PK87	32
DD50S-0L2-A197	11
DD50S-1A5N-A197	27
DD50S-1A6N-A197	27
DD50S-1A7N-A197	23
DD50S-1A8N-A197	23
DD50S-1A9N-A197	23
DD50S-1ADN-A197	25
DD50S-1AFN-A197	23
DD50S-1AJN-A197	25
DD50S-1AON-A197	21
DD50S-1ATN-A197	27
DD50S-1AUN-A197	27
DD50S-1AVN-A197	25
DD50S-1AWN-A197	25
DD50S-F179A-A197	13
DD50SA197	33
DD51216	206
DD51217	206
DD51223-1	210
DD53750-4	218
DDA24W7PK87F0	80
DDA24W7SA197F0	81
DDA36W4PK87F0	80
DDA36W4SA197F0	81
DDE50P-0L2-K87-146	10
DDE50PK87	32
DDE50S-0L2-A197-146	11
DDE50SA197	33
DDJK50P*-OL4	120
DDJKE50P*-OL4	120
DDJKE50P*-OL4-146	120
DDJKX50P*-OL4	120
DDJKX50P*-OL4-146	120
DDM-24W7P-1A0N-K87	74
DDM-24W7P-1A7N-K87	74
DDM-24W7P-NMB-77	195
DDM-24W7P-NMC-76	195
DDM-24W7P-OL2-K87	76
DDM-24W7P-OL4-K87	76
DDM-24W7S-1A0N-A197	75
DDM-24W7S-1A7N-A197	75
DDM-24W7S-NMB-76	195
DDM-24W7S-NMC-76	195
DDM-24W7S-OL2-A197	77
DDM-24W7S-OL4-A197	77
DDM-36W4P-1A0N-K87	74
DDM-36W4P-1A7N-K87	74
DDM-36W4P-NMB-77	195
DDM-36W4P-OL2-K87	76
DDM-36W4P-OL4-K87	76
DDM-36W4S-1A0N-A197	75
DDM-36W4S-1A7N-A197	75
DDM-36W4S-NMB-77	195
DDM-36W4S-NMC-76	195
DDM-36W4S-OL2-A197	77
DDM-36W4S-OL4-A197	77
DDM-43W2P-1A0N-K87	74
DDM-43W2P-1A7N-K87	74
DDM-43W2P-OL2-K87	76
DDM-43W2P-OL4-K87	76
DDM-43W2S-1A0N-A197	75
DDM-43W2S-1A7N-A197	75
DDM-43W2S-NMB-77	195
DDM-43W2S-NMC-76	195
DDM-43W2S-OL2-A197	77
DDM-43W2S-OL4-A197	77
DDM-47W1P-1A0N-K87	74
DDM-47W1P-1A7N-K87	74
DDM-47W1P-OL2-K87	76
DDM-47W1P-OL4-K87	76
DDM-47W1S-1A0N-A197	75
DDM-47W1S-1A7N-A197	75
DDM-47W1S-NMC-76	195
DDM-47W1S-OL2-A197	77
DDM-47W1S-OL4-A197	77
DDM-50P-NMC-77	195
DDM-50S-NMC-76	195
DDM-50S-NMC-77	195
DDM24W7P1A0NNMBK52	195
DDM24W7P1A7NNMBK52	195
DDM24W7P1A9NNMBK52	195
DDM24W7PF179ANMBK52	195
DDM24W7PK87	78
DDM24W7PNM	188
DDM24W7PNMB76	195
DDM24W7PNMBK52	195
DDM24W7POL3NMBK52	195
DDM24W7S1A0NNMBK52	195
DDM24W7S1A7NNMBK52	195
DDM24W7S1A9NNMBK52	195
DDM24W7SA197	79
DDM24W7SF179ANMBK52	195
DDM24W7SNM	189
DDM24W7SNMB77	195
DDM24W7SNMBK52	195
DDM24W7SOL3NMBK52	195
DDM36W4P1A0NNMBK52	195
DDM36W4P1A7NNMBK52	195
DDM36W4P1A9NNMBK52	195
DDM36W4PF179ANMBK52	195
DDM36W4PK87	78
DDM36W4PNM	188
DDM36W4PNMBK52	195
DDM36W4POL3NMBK52	195
DDM36W4S1A0NNMBK52	195
DDM36W4S1A7NNMBK52	195
DDM36W4S1A9NNMBK52	195

Dimensions are shown in mm (inch)
Dimensions subject to change

Part Number	Page
DDM36W4SA197	79
DDM36W4SF179ANMBK52	195
DDM36W4SNM	189
DDM36W4SNMB76	195
DDM36W4SNMBK52	195
DDM36W4SOL3NMBK52	195
DDM43W2P-NMB-77	195
DDM43W2P1A0NNMBK52	195
DDM43W2P1A7NNMBK52	195
DDM43W2P1A9NNMBK52	195
DDM43W2PF179ANMBK52	195
DDM43W2PK87	78
DDM43W2PNM	188
DDM43W2PNMBK52	195
DDM43W2POL3NMBK52	195
DDM43W2S1A0NNMBK52	195
DDM43W2S1A7NNMBK52	195
DDM43W2S1A9NNMBK52	195
DDM43W2SA197	79
DDM43W2SF179ANMBK52	195
DDM43W2SNM	189
DDM43W2SNMBK52	195
DDM43W2SOL3NMBK52	195
DDM47W1P-NMC-76	195
DDM47W1P1A0NNMBK52	195
DDM47W1P1A7NNMBK52	195
DDM47W1P1A9NNMBK52	195
DDM47W1PF179ANMBK52	195
DDM47W1PK87	78
DDM47W1PNM	188
DDM47W1PNMBK52	195
DDM47W1POL3NMBK52	195
DDM47W1S1A0NNMBK52	195
DDM47W1S1A7NNMBK52	195
DDM47W1S1A9NNMBK52	195
DDM47W1SA197	79
DDM47W1SF179ANMBK52	195
DDM47W1SNM	189
DDM47W1SNMBK52	195
DDM47W1SOL3NMBK52	195
DDM50P	140
DDM50P1A0NNMBK52	195
DDM50P1A7NNMBK52	195
DDM50P1A9NNMBK52	195
DDM50PA	132
DDM50PB	136
DDM50PD	132
DDM50PE	136
DDM50PF	134
DDM50PF179	138
DDM50PF179A	138
DDM50PF179ANMBK52	195
DDM50PG	132
DDM50PH	136
DDM50PK	134
DDM50PL	132
DDM50PLNM	174
DDM50PM	136
DDM50PNM	180
DDM50PNM*1A7N	178
DDM50PNM*1A9N	178
DDM50PNM*1AON	176
DDM50PNMB76	195
DDM50PNMB77	195
DDM50PNMBK52	195
DDM50PNMC76	195
DDM50POL3NM	172
DDM50POL3NMBK52	195
DDM50PP	134
DDM50PR	134
DDM50PS	132
DDM50PW	132
DDM50PX	136
DDM50PZ	136
DDM50S	141
DDM50S1A0NNMBK52	195
DDM50S1A7NNMBK52	195
DDM50S1A9NNMBK52	195
DDM50SA	133
DDM50SB	137
DDM50SC	135
DDM50SD	133
DDM50SE	137
DDM50SF	135
DDM50SF179	139
DDM50SF179A	139
DDM50SF179ANMBK52	195
DDM50SG	133
DDM50SH	137
DDM50SK	135
DDM50SL	133
DDM50SLNM	175
DDM50SM	137
DDM50SNM	181
DDM50SNM*1A7N	179
DDM50SNM*1A9N	179
DDM50SNM*1AON	177
DDM50SNMB76	195
DDM50SNMB77	195
DDM50SNMBK52	195
DDM50SOL3NM	173
DDM50SOL3NMBK52	195
DDM50SP	135
DDM50SR	135
DDM50SS	133
DDM50SW	133
DDM50SX	137
DDM50SZ	137
DDMA50PNM	182
DDMA50PNMBK52	195
DDMA50SNM	183
DDMA50SNMBK52	195
DDMA78PNM	184
DDMA78SNM	185
DDMAY50PNM	182
DDMAY50SNM	183
DDMAY78PNM	184
DDMAY78SNM	185
DDMB-247S-NMB-76	195
DDMB-50S-NMB-77	195
DDMB-50S-NMC-77	195
DDMB50S-NMB-76	195
DDMB50S-NMC-76	195
DDMC24C7PJK87	46
DDMC24C7SJA197	47
DDMC24H7PJK87	62
DDMC24H7SJA197	63
DDMC36C4PJK87	46
DDMC36C4SJA197	47
DDMC36H4PJK87	62
DDMC36H4SJA197	63
DDMC43C2PJK87	46
DDMC43C2SJA197	47
DDMC43H2PJK87	62
DDMC43H2SJA197	63
DDMC47C1PJK87	46
DDMC47C1SJA197	47
DDMC47H1PJK87	62
DDMC47H1SJA197	63
DDMC50PJK87	16
DDMC50SJA197	17
DDMD24C7PJK87	46
DDMD24C7SJA197	47
DDMD24H7PJK87	62
DDMD24H7SJA197	63
DDMD36C4PJK87	46
DDMD36C4SJA197	47
DDMD36H4PJK87	62
DDMD36H4SJA197	63
DDMD43C2PJK87	46
DDMD43C2SJA197	47
DDMD43H2PJK87	62
DDMD43H2SJA197	63
DDMD47C1PJK87	46
DDMD47C1SJA197	47
DDMD47H1PJK87	62
DDMD47H1SJA197	63
DDMD50PJK87	16
DDMD50SJA197	17
DDME24W7PK87	78
DDME24W7SA197	79
DDME36W4PK87	78
DDME36W4SA197	79
DDME43W2PK87	78
DDME43W2SA197	79
DDME47W1PK87	78
DDME47W1SA197	79
DDME50P	140
DDME50S	141
DDMG24C7PJK87	46
DDMG24C7SJA197	47
DDMG24H7PJK87	62
DDMG24H7SJA197	63
DDMG36C4PJK87	46
DDMG36C4SJA197	47
DDMG36H4PJK87	62
DDMG36H4SJA197	63
DDMG43C2PJK87	46
DDMG43C2SJA197	47
DDMG43H2PJK87	62
DDMG43H2SJA197	63
DDMG47C1PJK87	46
DDMG47C1SJA197	47
DDMG47H1PJK87	62
DDMG47H1SJA197	63
DDMG50PJK87	16
DDMG50SJA197	17
DDMM24W7P	166
DDMM36W4P	166
DDMM43W2P	166
DDMM47W1P	166
DDMM50P	140
DDMM50PA	132
DDMM50PB	136
DDMM50PC	134
DDMM50PD	132
DDMM50PE	136
DDMM50PF	134
DDMM50PF179	138
DDMM50PF179A	138
DDMM50PG	132
DDMM50PH	136
DDMM50PK	134
DDMM50PL	132
DDMM50PM	136
DDMM50PP	134
DDMM50PR	134
DDMM50PS	132
DDMM50PW	132
DDMM50PX	136
DDMM50PZ	136
DDMM50S	141
DDMM50SA	133
DDMM50SB	137
DDMM50SC	135
DDMM50SD	133
DDMM50SE	137
DDMM50SF	135
DDMM50SF179	139
DDMM50SF179A	139
DDMM50SG	133
DDMM50SH	137
DDMM50SK	135
DDMM50SL	133
DDMM50SM	137
DDMM50SP	135
DDMM50SR	135
DDMM50SS	133
DDMM50SW	133
DDMM50SX	137
DDMM50SZ	137
DDMMC24C7PJ	148
DDMMC24C7SJ	149
DDMMC24H7PJ	156
DDMMC24H7SJ	157
DDMMC36C4PJ	148
DDMMC36C4SJ	149
DDMMC36H4PJ	156
DDMMC36H4SJ	157
DDMMC43C2PJ	148
DDMMC43C2SJ	149
DDMMC43H2PJ	156
DDMMC43H2SJ	157
DDMMC47C1PJ	148
DDMMC47C1SJ	149
DDMMC47H1PJ	156
DDMMC47H1SJ	157
DDMMD24C7PJ	148
DDMMD24C7SJ	149
DDMMD24H7PJ	156
DDMMD24H7SJ	157
DDMMD36C4PJ	148
DDMMD36C4SJ	149
DDMMD36H4PJ	156
DDMMD36H4SJ	157
DDMMD43C2PJ	148
DDMMD43C2SJ	149
DDMMD43H2PJ	156
DDMMD43H2SJ	157
DDMMD47C1PJ	148
DDMMD47C1SJ	149
DDMMD47H1PJ	156
DDMMD47H1SJ	157
DDMME24W7P	166
DDMME36W4P	166
DDMME43W2P	166
DDMME47W1P	166
DDMME50P	140
DDMME50S	141
DDMMG24C7PJ	148
DDMMG24C7SJ	149
DDMMG24H7PJ	156
DDMMG24H7SJ	157
DDMMG36C4PJ	148
DDMMG36C4SJ	149
DDMMG36H4PJ	156
DDMMG36H4SJ	157
DDMMG43C2PJ	148
DDMMG43C2SJ	149
DDMMG43H2PJ	156
DDMMG43H2SJ	157
DDMMG47C1PJ	148
DDMMG47C1SJ	149
DDMMG47H1PJ	156
DDMMG47H1SJ	157
DDMMN24C7PN	152
DDMMN24C7SN	153
DDMMN24H7PN	160
DDMMN24H7SN	161
DDMMN24V7PN	164
DDMMN24V7SN	165
DDMMN36C4PN	152
DDMMN36C4SN	153
DDMMN36H4PN	160
DDMMN36H4SN	161
DDMMN36V4PN	164
DDMMN36V4SN	165
DDMMN43C2PN	152
DDMMN43C2SN	153
DDMMN43H2PN	160
DDMMN43H2SN	161
DDMMN43V2PN	164
DDMMN43V2SN	165
DDMMN47C1PN	152
DDMMN47C1SN	153
DDMMN47H1PN	160
DDMMN47H1SN	161
DDMMN47V1PN	164
DDMMN47V1SN	165
DDMMP24C7PJ	148
DDMMP24C7SJ	149
DDMMP24H7PJ	156
DDMMP24H7SJ	157
DDMMP36C4PJ	148
DDMMP36C4SJ	149
DDMMP36H4PJ	156
DDMMP36H4SJ	157
DDMMP43C2PJ	148
DDMMP43C2SJ	149
DDMMP43H2PJ	156
DDMMP43H2SJ	157
DDMMP47C1PJ	148
DDMMP47C1SJ	149
DDMMP47H1PJ	156
DDMMP47H1SJ	157
DDMMV24C7PN	152
DDMMV24C7SN	153
DDMMV24H7PN	160
DDMMV24H7SN	161
DDMMV24V7PN	164
DDMMV24V7SN	165
DDMMV36C4PN	152

Part Number	Page
DDMMV36C4SN	153
DDMMV36H4PN	160
DDMMV36H4SN	161
DDMMV36V4PN	164
DDMMV36V4SN	165
DDMMV43C2PN	152
DDMMV43C2SN	153
DDMMV43H2PN	160
DDMMV43H2SN	161
DDMMV43V2PN	164
DDMMV43V2SN	165
DDMMV47C1PN	152
DDMMV47C1SN	153
DDMMV47H1PN	160
DDMMV47H1SN	161
DDMMV47V1PN	164
DDMMV47V1SN	165
DDMMY24W7P	166
DDMMY36W4P	166
DDMMY43W2P	166
DDMMY47W1P	166
DDMMY50P	140
DDMMY50S	141
DDMMZ24C7PN	152
DDMMZ24C7SN	153
DDMMZ24H7PN	160
DDMMZ24H7SN	161
DDMMZ24V7PN	164
DDMMZ24V7SN	165
DDMMZ36C4PN	152
DDMMZ36C4SN	153
DDMMZ36H4PN	160
DDMMZ36H4SN	161
DDMMZ36V4PN	164
DDMMZ36V4SN	165
DDMMZ43C2PN	152
DDMMZ43C2SN	153
DDMMZ43H2PN	160
DDMMZ43H2SN	161
DDMMZ43V2PN	164
DDMMZ43V2SN	165
DDMMZ47C1PN	152
DDMMZ47C1SN	153
DDMMZ47H1PN	160
DDMMZ47H1SN	161
DDMMZ47V1PN	164
DDMMZ47V1SN	165
DDMN24C7PNK87	54
DDMN24C7PYK87	58
DDMN24C7SNA197	55
DDMN24C7SYA197	59
DDMN24H7PNK87	68
DDMN24H7PYK87	72
DDMN24H7SNA197	69
DDMN24H7SYA197	73
DDMN36C4PNK87	54
DDMN36C4PYK87	58
DDMN36C4SNA197	55
DDMN36C4SYA197	59
DDMN36H4PNK87	68
DDMN36H4PYK87	72
DDMN36H4SNA197	69
DDMN36H4SYA197	73
DDMN43C2PNK87	54
DDMN43C2PYK87	58
DDMN43C2SNA197	55
DDMN43C2SYA197	59
DDMN43H2PNK87	68
DDMN43H2PYK87	72
DDMN43H2SNA197	69
DDMN43H2SYA197	73
DDMN47C1PNK87	54
DDMN47C1PYK87	58
DDMN47C1SNA197	55
DDMN47C1SYA197	59
DDMN47H1PNK87	68
DDMN47H1PYK87	72
DDMN47H1SNA197	69
DDMN47H1SYA197	73
DDMN50PNK87	6
DDMN50SNA197	7
DDMP24C7PJK87	46
DDMP24C7SJA197	47
DDMP24H7PJK87	62
DDMP24H7SJA197	63
DDMP36C4PJK87	46
DDMP36C4SJA197	47
DDMP36H4PJK87	62
DDMP36H4SJA197	63
DDMP43C2PJK87	46
DDMP43C2SJA197	47
DDMP43H2PJK87	62
DDMP43H2SJA197	63
DDMP47C1PJK87	46
DDMP47C1SJA197	47
DDMP47H1PJK87	62
DDMP47H1SJA197	63
DDMP50PJK87	16
DDMP50SJA197	17
DDMV24C7PNK87	54
DDMV24C7PYK87	58
DDMV24C7SNA197	55
DDMV24C7SYA197	59
DDMV24H7PNK87	68
DDMV24H7PYK87	72
DDMV24H7SNA197	69
DDMV24H7SYA197	73
DDMV36C4PNK87	54
DDMV36C4PYK87	58
DDMV36C4SNA197	55
DDMV36C4SYA197	59
DDMV36H4PNK87	68
DDMV36H4PYK87	72
DDMV36H4SNA197	69
DDMV36H4SYA197	73
DDMV43C2PNK87	54
DDMV43C2PYK87	58
DDMV43C2SNA197	55
DDMV43C2SYA197	59
DDMV43H2PNK87	68
DDMV43H2PYK87	72
DDMV43H2SNA197	69
DDMV43H2SYA197	73
DDMV47C1PNK87	54
DDMV47C1PYK87	58
DDMV47C1SNA197	55
DDMV47C1SYA197	59
DDMV47H1PNK87	68
DDMV47H1PYK87	72
DDMV47H1SNA197	69
DDMV47H1SYA197	73
DDMV50PNK87	6
DDMV50SNA197	7
DDMY24W7PK87	78
DDMY24W7PNM	188
DDMY24W7SA197	79
DDMY24W7SNM	189
DDMY36W4PK87	78
DDMY36W4PNM	188
DDMY36W4SA197	79
DDMY36W4SNM	189
DDMY43W2PK87	78
DDMY43W2PNM	188
DDMY43W2SA197	79
DDMY43W2SNM	189
DDMY47W1PK87	78
DDMY47W1PNM	188
DDMY47W1SA197	79
DDMY47W1SNM	189
DDMY50P	140
DDMY50PNM	180
DDMY50PNM*1AON	176
DDMY50POL3NM	172
DDMY50S	141
DDMY50SNM	181
DDMY50SNM*1AON	177
DDMY50SOL3NM	173
DDMZ24C7PNK87	54
DDMZ24C7PYK87	58
DDMZ24C7SNA197	55
DDMZ24C7SYA197	59
DDMZ24H7PNK87	68
DDMZ24H7PYK87	72
DDMZ24H7SNA197	69
DDMZ24H7SYA197	73
DDMZ36C4PNK87	54
DDMZ36C4PYK87	58
DDMZ36C4SNA197	55
DDMZ36C4SYA197	59
DDMZ36H4PNK87	68
DDMZ36H4PYK87	72
DDMZ36H4SNA197	69
DDMZ36H4SYA197	73
DDMZ43C2PNK87	54
DDMZ43C2PYK87	58
DDMZ43C2SNA197	55
DDMZ43C2SYA197	59
DDMZ43H2PNK87	68
DDMZ43H2PYK87	72
DDMZ43H2SNA197	69
DDMZ43H2SYA197	73
DDMZ47C1PNK87	54
DDMZ47C1PYK87	58
DDMZ47C1SNA197	55
DDMZ47C1SYA197	59
DDMZ47H1PNK87	68
DDMZ47H1PYK87	72
DDMZ47H1SNA197	69
DDMZ47H1SYA197	73
DDMZ50PNK87	6
DDMZ50SNA197	7
DDNG50P-P1	4
DDNG50S-P1	5
DDNGE50P-P1	4
DDNGE50S-P1	5
DDNGL50P-P1	4
DDNGL50S-P1	5
DDNGX50P-P1	4
DDNGX50S-P1	5
DDNGZ50P-P1	4
DDNGZ50S-P1	5
DDX50P-0L2-K87-146	10
DDX50PK87	32
DDX50S-0L2-A197-146	11
DDX50SA197	33
DE-59-20	195, 218
DE-60-20	195, 218
DE111805-1	216
DE111805-5	216
DE111813	216
DE111813-3	216
DE111919	215
DE111920	214
DE115339	207
DE115339-20	205
DE115386-101A	195
DE115386-1B	207
DE121073-154	200
DE121073-54	200
DE19977-47	193, 195
DE19977-5	204
DE24657	203
DE24657-16	192, 195
DE44994	203
DE44994-2	192
DE50904-1	218
DE51218	206
DE51219	206
DE51224-1	210
DE53750	218
DE9P-0L2-K87	10
DE9P-1A5N-K87	26
DE9P-1A6N-K87	26
DE9P-1A7N-K87	22
DE9P-1A8N-K87	22
DE9P-1A9N-K87	22
DE9P-1ADN-K87	24
DE9P-1AFN-K87	22
DE9P-1AJN-K87	24
DE9P-1AON-K87	20
DE9P-1ATN-K87	26
DE9P-1AUN-K87	26
DE9P-1AVN-K87	24
DE9P-1AWN-K87	24
DE9P-F179A-K87	12
DE9PK87	32
DE9S-0L2-A197	11
DE9S-1A5N-A197	27
DE9S-1A6N-A197	27
DE9S-1A7N-A197	23
DE9S-1A8N-A197	23
DE9S-1A9N-A197	23
DE9S-1ADN-A197	25
DE9S-1AFN-A197	23
DE9S-1AJN-A197	25
DE9S-1AON-A197	21
DE9S-1ATN-A197	27
DE9S-1AUN-A197	27
DE9S-1AVN-A197	25
DE9S-1AWN-A197	25
DE9S-F179A-A197	13
DE9SA197	33
DEA9PK87FO	36
DEA9SA197FO	37
DEBS-9	205
DEBU111515	216
DEE9P-0L2-K87-146	10
DEE9PK87	32
DEE9S-0L2-A197-146	11
DEE9SA197	33
DEJK9P*-1A0N	110
DEJK9P*-1A5N	118
DEJK9P*-1A6N	118
DEJK9P*-1A7N	114
DEJK9P*-1A8N	114
DEJK9P*-1A9N	114
DEJK9P*-1ADN	116
DEJK9P*-1AFN	114
DEJK9P*-1AGN	116
DEJK9P*-1AHN	114
DEJK9P*-1AJN	116
DEJK9P*-1APN	118
DEJK9P*-1ATN	118
DEJK9P*-1AUN	118
DEJK9P*-1AVN	116
DEJK9P*-1AWN	116
DEJK9P*-1U0N	108
DEJK9P*-1U7N	112
DEJK9P*-1U7N-146	112
DEJK9P*-OL4	120
DEJK9S*-1A0N	111
DEJK9S*-1A5N	119
DEJK9S*-1A6N	119
DEJK9S*-1A7N	115
DEJK9S*-1A8N	115
DEJK9S*-1A9N	115
DEJK9S*-1ADN	117
DEJK9S*-1AFN	115
DEJK9S*-1AGN	117
DEJK9S*-1AHN	115
DEJK9S*-1AJN	117
DEJK9S*-1APN	119
DEJK9S*-1ATN	119
DEJK9S*-1AUN	119
DEJK9S*-1AVN	117
DEJK9S*-1AWN	117
DEJK9S*-1U0N	109
DEJK9S*-1U7N	113
DEJK9S*-1U7N-146	113
DEJK9S*-OL4	121
DEJKE9P*-1A0N	110
DEJKE9P*-1U0N	108
DEJKE9P*-OL4	120
DEJKE9P*-OL4-146	120
DEJKE9S*-1A0N	111
DEJKE9S*-1U0N	109
DEJKE9S*-OL4	121
DEJKE9S*-OL4-146	121
DEJKX9P*-1A0N	110
DEJKX9P*-OL4	120
DEJKX9P*-OL4-146	120
DEJKX9S*-1A0N	111
DEJKX9S*-OL4	121
DEJKX9S*-OL4-146	121
DEJT9P	122
DEJT9S*	123
DEJTE9P	122
DEJTE9S*	123
DEJTX9P	122
DEJTX9S*	123
DEM-5W1P-1A0N-K87	74
DEM-5W1P-1A7N-K87	74

Part Number	Page
DEM-5W1P-NMB-76	195
DEM-5W1P-NMB-77	195
DEM-5W1P-NMC-76	195
DEM-5W1P-OL2-K87	76
DEM-5W1P-OL4-K87	76
DEM-5W1S-1A0N-A197	75
DEM-5W1S-1A7N-A197	75
DEM-5W1S-NMB-77	195
DEM-5W1S-NMC-76	195
DEM-5W1S-OL2-A197	77
DEM-5W1S-OL4-A197	77
DEM-9P-NMB-76	195
DEM-9S-NMB-76	195
DEM-9S-NMC-77	195
DEM5W1P1A0NNMBK52	195
DEM5W1P1A7NNMBK52	195
DEM5W1P1A9NNMBK52	195
DEM5W1PF179ANMBK52	195
DEM5W1PK87	78
DEM5W1PNM	188
DEM5W1PNMBK52	195
DEM5W1POL3NMBK52	195
DEM5W1S1A0NNMBK52	195
DEM5W1S1A7NNMBK52	195
DEM5W1S1A9NNMBK52	195
DEM5W1SA197	79
DEM5W1SF179ANMBK52	195
DEM5W1SNM	189
DEM5W1SNMBK52	195
DEM5W1SOL3NMBK52	195
DEM9P	140
DEM9P1A0NNMBK52	195
DEM9P1A7NNMBK52	195
DEM9P1A9NNMBK52	195
DEM9PA	132
DEM9PB	136
DEM9PC	134
DEM9PD	132
DEM9PE	136
DEM9PF	134
DEM9PF179	138
DEM9PF179A	138
DEM9PF179ANMBK52	195
DEM9PG	132
DEM9PH	136
DEM9PK	134
DEM9PL	132
DEM9PLNM	174
DEM9PM	136
DEM9PNM	180
DEM9PNM*1A7N	178
DEM9PNM*1A9N	178
DEM9PNM*1AON	176
DEM9PNMBK52	195
DEM9PNMC76	195
DEM9PNMC77	195
DEM9POL3NM	172
DEM9POL3NMBK52	195
DEM9PP	134
DEM9PR	134
DEM9PS	132
DEM9PW	132
DEM9PX	136
DEM9PZ	136
DEM9S	141
DEM9S1A0NNMBK52	195
DEM9S1A7NNMBK52	195
DEM9S1A9NNMBK52	195
DEM9SA	133
DEM9SB	137
DEM9SC	135
DEM9SD	133
DEM9SE	137
DEM9SF	135
DEM9SF179	139
DEM9SF179A	139
DEM9SF179ANMBK52	195
DEM9SG	133
DEM9SH	137
DEM9SK	135
DEM9SL	133
DEM9SLNM	175
DEM9SM	137
DEM9SNM	181
DEM9SNM*1A7N	179
DEM9SNM*1A9N	179
DEM9SNM*1AON	177
DEM9SNMB77	195
DEM9SNMBK52	195
DEM9SNMC76	195
DEM9SOL3NM	173
DEM9SOL3NMBK52	195
DEM9SP	135
DEM9SR	135
DEM9SS	133
DEM9SW	133
DEM9SX	137
DEM9SZ	137
DEMA15PNM	184
DEMA15PNMBK47FO	195
DEMA15SNM	185
DEMA15SNMBK47FO	195
DEMA25PNMBK47FO	195
DEMA25SNMBK47FO	195
DEMA37PNMBK47FO	195
DEMA37SNMBK47FO	195
DEMA50PNMBK47FO	195
DEMA50SNMBK47FO	195
DEMA9PNM	182
DEMA9PNMBK47FO	195
DEMA9PNMBK52	195
DEMA9SNM	183
DEMA9SNMBK47FO	195
DEMA9SNMBK52	195
DEMAK15PNMBK47FO	195
DEMAK15SNMBK47FO	195
DEMAK25PNMBK47FO	195
DEMAK25SNMBK47FO	195
DEMAK37PNMBK47FO	195
DEMAK37SNMBK47FO	195
DEMAK50PNMBK47FO	195
DEMAK9PNMBK47FO	195
DEMAK9SNMBK47FO	195
DEMAY15PNM	184
DEMAY15SNM	185
DEMAY9PNM	182
DEMAY9SNM	183
DEMB-5W1S-NMB-76	195
DEMB-9S-NMC-77	195
DEMB9S-NMB-76	195
DEMB9S-NMC-76	195
DEMB9SNMB77	195
DEMC5C1PJK87	44
DEMC5C1PVK87	50
DEMC5C1SJA197	45
DEMC5C1SVA197	51
DEMC5H1PJK87	60
DEMC5H1SJA197	61
DEMC5P1PVK87	64
DEMC5P1SVA197	65
DEMC9SJA197	17
DEMCP9PJK87	16
DEMD5C1PJK87	44
DEMD5C1PVK87	50
DEMD5C1SJA197	45
DEMD5C1SVA197	51
DEMD5H1PJK87	60
DEMD5H1SJA197	61
DEMD5P1PVK87	64
DEMD5P1SVA197	65
DEMD9PJK87	16
DEMD9SJA197	17
DEME5W1PK87	78
DEME5W1SA197	79
DEME9P	140
DEME9S	141
DEMG5C1PJK87	44
DEMG5C1PVK87	50
DEMG5C1SJA197	45
DEMG5C1SVA197	51
DEMG5H1PJK87	60
DEMG5H1SJA197	61
DEMG5P1PVK87	64
DEMG5P1SVA197	65
DEMG9PJK87	16
DEMG9SJA197	17
DEMM5W1P	166
DEMM5W1S	167
DEMM9P	140
DEMM9PA	132
DEMM9PB	136
DEMM9PC	134
DEMM9PD	132
DEMM9PE	136
DEMM9PF	134
DEMM9PF179	138
DEMM9PF179A	138
DEMM9PG	132
DEMM9PH	136
DEMM9PK	134
DEMM9PL	132
DEMM9PM	136
DEMM9PP	134
DEMM9PR	134
DEMM9PS	132
DEMM9PW	132
DEMM9PX	136
DEMM9PZ	136
DEMM9S	141
DEMM9SA	133
DEMM9SB	137
DEMM9SC	135
DEMM9SD	133
DEMM9SE	137
DEMM9SF	135
DEMM9SF179	139
DEMM9SF179A	139
DEMM9SG	133
DEMM9SH	137
DEMM9SK	135
DEMM9SL	133
DEMM9SM	137
DEMM9SP	135
DEMM9SR	135
DEMM9SS	133
DEMM9SW	133
DEMM9SX	137
DEMM9SZ	137
DEMMC5C1PJ	146
DEMMC5C1SJ	147
DEMMC5H1PJ	154
DEMMC5H1SJ	155
DEMMD5C1PJ	146
DEMMD5C1SJ	147
DEMMD5H1PJ	154
DEMMD5H1SJ	155
DEMME5W1P	166
DEMME5W1S	167
DEMME9P	140
DEMME9S	141
DEMMG5C1PJ	146
DEMMG5C1SJ	147
DEMMG5H1PJ	154
DEMMG5H1SJ	155
DEMMN5C1PN	150
DEMMN5C1SN	151
DEMMN5H1PN	158
DEMMN5H1SN	159
DEMMN5V1PN	162
DEMMN5V1SN	163
DEMMP5C1PJ	146
DEMMP5C1SJ	147
DEMMP5H1PJ	154
DEMMP5H1SJ	155
DEMMV5C1PN	150
DEMMV5C1SN	151
DEMMV5H1PN	158
DEMMV5H1SN	159
DEMMV5V1PN	162
DEMMV5V1SN	163
DEMMY5W1P	166
DEMMY5W1S	167
DEMMY9P	140
DEMMY9S	141
DEMMZ5C1PN	150
DEMMZ5C1SN	151
DEMMZ5H1PN	158
DEMMZ5H1SN	159
DEMMZ5V1PN	162
DEMMZ5V1SN	163
DEMN5C1PNK87	52
DEMN5C1PYK87	56
DEMN5C1SNA197	53
DEMN5C1SYA197	57
DEMN5H1PNK87	66
DEMN5H1PYK87	70
DEMN5H1SNA197	67
DEMN5H1SYA197	71
DEMN9PNK87	6
DEMN9SNA197	7
DEMP5C1PJK87	44
DEMP5C1PVK87	50
DEMP5C1SJA197	45
DEMP5C1SVA197	51
DEMP5H1PJK87	60
DEMP5H1SJA197	61
DEMP5P1PVK87	64
DEMP5P1SVA197	65
DEMP9PJK87	16
DEMP9SJA197	17
DEMPPNMB77	195
DEMV5C1PNK87	52
DEMV5C1PYK87	56
DEMV5C1SNA197	53
DEMV5C1SYA197	57
DEMV5H1PNK87	66
DEMV5H1PYK87	70
DEMV5H1SNA197	67
DEMV5H1SYA197	71
DEMV9PNK87	6
DEMV9SNA197	7
DEMY5W1PK87	78
DEMY5W1PNM	188
DEMY5W1SA197	79
DEMY5W1SNM	189
DEMY9P	140
DEMY9PNM	180
DEMY9PNM*1AON	176
DEMY9POL3NM	172
DEMY9S	141
DEMY9SNM	181
DEMY9SNM*1AON	177
DEMY9SOL3NM	173
DEMZ5C1PNK87	52
DEMZ5C1PYK87	56
DEMZ5C1SNA197	53
DEMZ5C1SYA197	57
DEMZ5H1PNK87	66
DEMZ5H1PYK87	70
DEMZ5H1SNA197	67
DEMZ5H1SYA197	71
DEMZ9PNK87	6
DEMZ9SNA197	7
DENG9P-P1	4
DENG9S-P1	5
DENGE9P-P1	4
DENGE9S-P1	5
DENGL9P-P1	4
DENGL9S-P1	5
DENGX9P-P1	4
DENGX9S-P1	5
DENGZ9P-P1	4
DENGZ9S-P1	5
DEW9P*	38
DEW9P*G	38
DEW9S*	39
DEW9S*G	39
DEWE9P*	38
DEWE9P*G	38
DEWE9S*	39
DEWE9S*G	39
DEX9P-0L2-K87-146	10
DEX9PK87	32
DEX9S-0L2-A197-146	11
DEX9SA197	33
DM115224-1010A	191, 195
DM115224-1020A	191, 195
DM115224-1040A	191, 195
DM115224-2010A	191, 195
DM115224-2020A	191, 195
DM115224-2040A	191, 195
DM115224-3010	191, 195

Part Number	Page
DM115224-3010A	191
DM115224-3020	191, 195
DM115224-3020A	191
DM115224-3040	191, 195
DM115224-3040A	191
DM115224-4010	191, 195
DM115224-4010A	191
DM115224-4020	191, 195
DM115224-4020A	191
DM115224-4040	191, 195
DM115224-4040A	191
DM115740-12	195
DM115740-13	195
DM115740-19	195
DM115740-5036	195
DM115740-5046	195
DM115740-5047	195
DM115741-5032	195
DM115741-5048	195
DM115741-7	195
DM115741-8	195
DM115742-13	195
DM115742-14	195
DM115742-15	195
DM115742-5028	195
DM115742-5039	195
DM115742-5075	195
DM115743-20	195
DM115743-22	195
DM115743-5040	195
DM115743-5064	195
DM130321-3	92
DM130338	90
DM130338-1	90, 191
DM130338-4	90
DM130339	90
DM130339-1	90, 191
DM130339-4	90
DM130340	90
DM130340-1	90, 191
DM130340-4	90
DM130341	90
DM130341-1	90
DM130341-4	90
DM130342	90
DM130342-1	90
DM130342-4	90
DM130343	90
DM130343-1	90
DM130343-4	90
DM130346-2	92
DM130352-2	92
DM130358-2	92
DM13041-1	191
DM13042-1	191
DM13043-1	191
DM51155	91
DM51155-12	94
DM51155-13	94
DM51155-5000	91
DM51155-5004	91
DM51155-5005	195
DM51155-7	91, 195
DM51157	91
DM51157-13	94
DM51157-14	94
DM51157-5000	91
DM51157-5005	91, 195
DM51157-8	91, 195
DM53740	86
DM53740-1	86
DM53740-15	86, 195
DM53740-16	86, 195
DM53740-17	86, 195
DM53740-18	86, 195
DM53740-3	86
DM53740-35	86
DM53740-36	190
DM53740-5	86
DM53740-5000	86
DM53740-5001	86
DM53740-5002	86
DM53740-5005	86
DM53740-5008	86
DM53740-5099	86
DM53740-5100	86
DM53740-5101	86
DM53740-5104	86
DM53740-5105	86
DM53740-5145	86
DM53740-5147	190
DM53741	87
DM53741-1	87
DM53741-10	87, 195
DM53741-11	87, 195
DM53741-12	87, 195
DM53741-13	87, 195
DM53741-3	87
DM53741-4	87
DM53741-5000	87
DM53741-5001	87
DM53741-5003	87
DM53741-5004	87
DM53741-5059	87
DM53741-5060	87
DM53741-5062	87
DM53741-5063	87
DM53742	86
DM53742-1	86
DM53742-16	86, 195
DM53742-17	86, 195
DM53742-18	86, 195
DM53742-19	86, 195
DM53742-3	86
DM53742-36	86
DM53742-37	190
DM53742-5	86
DM53742-5000	86
DM53742-5001	86
DM53742-5002	86
DM53742-5004	86
DM53742-5006	86
DM53742-5085	86
DM53742-5086	86
DM53742-5089	86
DM53742-5091	86
DM53742-5092	86
DM53742-5126	86
DM53742-5127	190
DM53743-16	87, 195
DM53743-17	87, 195
DM53743-18	87, 195
DM53743-19	87, 195
DM53743-2	87
DM53743-3	87
DM53743-5	87
DM53743-5000	87
DM53743-5001	87
DM53743-5003	87
DM53743-5004	87
DM53743-5073	87
DM53743-5074	87
DM53743-5076	87
DM53743-5077	87
DM53743-6	87
DM53744-1	90
DM53744-107	93
DM53744-21	90, 191
DM53744-24	90, 191
DM53744-25	90, 191
DM53744-6	90
DM53744-62	191
DM53744-63	191
DM53744-64	191
DM53744-7	90
DM53744-92	93
DM53744-95	93
DM53745-1	90
DM53745-104	93
DM53745-107	93
DM53745-120	93
DM53745-126	95
DM53745-25	90, 191
DM53745-27	90, 191
DM53745-28	90, 191
DM53745-7	90
DM53745-70	191
DM53745-72	191
DM53745-77	191
DM53745-8	90
M24308/26-1	209
M24308/26-2	209
M85049/48-1-1	203
M85049/48-1-2	203
M85049/48-1-3	203
M85049/48-1-4	203
M85049/48-1-5	203
M85049/48-2-1	203
M85049/48-2-2	203
M85049/48-2-3	203
M85049/48-2-4	203
M85049/48-2-5	203
M85049/48-3-2	204
M85049/48-3-3	204
M85049/48-3-4	204
M85049/48-3-5	204
M85049/50-1	204
M85049/50-2	204
M85049/50-3	204
M85049/50-4	204
M85049/50-5	204
MDSM-15PE-Z10-VR22	99
MDSM-15SC-Z11-VS1	100
MDSM-18PE-Z10-VR25	99
MDSM-25PE-Z10-VR17	99
MDSM-25SC-Z11-VS1	100
MDSM-30PE-Z10-VR22	99
MDSM-9PE-Z10-VR25	99
MDSM-9SC-Z11-VS1	100
ZDA15P-1AKN-146	28
ZDA15P-A191	34
ZDA15P-OL2	8
ZDA15S-1AKN-146	29
ZDA15S-A191	35
ZDA15S-OL2	9
ZDAE15P-OL2-146	8
ZDAE15S-OL2-146	9
ZDAL15P-1AKN-146	28
ZDAL15S-1AKN-146	29
ZDB25P-1AKN-146	28
ZDB25P-A191	34
ZDB25P-OL2	8
ZDB25S-1AKN-146	29
ZDB25S-A191	35
ZDB25S-OL2	9
ZDBE25P-OL2-146	8
ZDBE25S-OL2-146	9
ZDBL25P-1AKN-146	28
ZDBL25S-1AKN-146	29
ZDC37P-1AKN-146	28
ZDC37P-A191	34
ZDC37P-OL2	8
ZDC37S-1AKN-146	29
ZDC37S-A191	35
ZDC37S-OL2	9
ZDCE37P-OL2-146	8
ZDCE37S-OL2-146	9
ZDCL37P-1AKN-146	28
ZDCL37S-1AKN-146	29
ZDD50P-A191	34
ZDD50P-OL2	8
ZDD50S-A191	35
ZDD50S-OL2	9
ZDDE50P-OL2-146	8
ZDDE50S-OL2-146	9
ZDE9P-1AKN-146	28
ZDE9P-A191	34
ZDE9P-OL2	8
ZDE9S-1AKN-146	29
ZDE9S-A191	35
ZDE9S-OL2	9
ZDEE9P-OL2-146	8
ZDEE9S-OL2-146	9
ZDEL9P-1AKN-146	28
ZDEL9S-1AKN-146	29
ZEDA15PBA	18
ZEDA15SBA	19
ZEDAL15PBA	18
ZEDAL15SBA	19
ZEDB25PBA	18
ZEDB25SBA	19
ZEDBL25PBA	18
ZEDBL25SBA	19
ZEDC37PBA	18
ZEDC37SBA	19
ZEDCL37PBA	18
ZEDCL37SBA	19
ZEDE9PBA	18
ZEDE9SBA	19
ZEDEL9PBA	18
ZEDEL9SBA	19

Dimensions are shown in mm (inch)
Dimensions subject to change

Product Safety Information

THIS NOTE MUST BE READ IN CONJUNCTION WITH THE PRODUCT DATA SHEET/CATALOG. FAILURE TO OBSERVE THE ADVICE IN THIS INFORMATION SHEET AND THE OPERATING CONDITIONS SPECIFIED IN THE PRODUCT DATA SHEET/CATALOG COULD RESULT IN HAZARDOUS SITUATIONS.

1 MATERIAL CONTENT AND PHYSICAL FORM
Electrical connectors do not usually contain hazardous materials. They contain conducting and non-conducting materials and can be divided into two groups.
a) Printed circuit types and low cost audio types which employ all plastic insulators and casings.
b) Rugged, Fire Barrier and High Reliability types with metal casings and either natural rubber, synthetic rubber, plastic or glass insulating materials. Contact materials vary with type of connector and also application and are usually manufactured from either: Copper, copper alloys, nickel, alumel, chromel or steel. In special applications, other alloys may be specified.

2 FIRE CHARACTERISTICS AND ELECTRIC SHOCK HAZARD
There is no fire hazard when the connector is correctly wired and used within the specified parameters. Incorrect wiring or assembly of the connector or careless use of metal tools or conductive fluids, or transit damage to any of the component parts may cause electric shock or burns. Live circuits must not be broken by separating mated connectors as this may cause arcing, ionisation and burning. Heat dissipation is greater at maximum resistance in a circuit. Hot spots may occur when resistance is raised locally by damage, e.g. cracked or deformed contacts, broken strands of wire. Local overheating may also result from the use of the incorrect application tools or from poor quality soldering or slack screw terminals. Overheating may occur if the ratings in the product Data Sheet/Catalog are exceeded and can cause breakdown of insulation and hence electric shock.
If heating is allowed to continue it intensifies by further increasing the local resistance through loss of temper of spring contacts, formation of oxide film on contacts and wires and leakage currents through carbonisation of insulation and tracking paths. Fire can then result in the presence of combustible materials and this may release noxious fumes. Overheating may not be visually apparent. Burns may result from touching overheated components.

3 HANDLING
Care must be taken to avoid damage to any component parts of electrical connectors during installation and use. Although there are normally no sharp edges, care must be taken when handling certain components to avoid injury to fingers.
Electrical connectors may be damaged in transit to the customers, and damage may result in creation of hazards. Products should therefore be examined prior to installation/use and rejected if found to be damaged.

4 DISPOSAL
Incineration of certain materials may release noxious or even toxic fumes.

5 APPLICATION
Connectors with exposed contacts should not be selected for use on the current supply side of an electrical circuit, because an electric shock could result from touching exposed contacts on an unmated connector. Voltages in excess of 30 V ac or 42.5 V dc are potentially hazardous and care should be taken to ensure that such voltages cannot be transmitted in any way to exposed metal parts of the connector body. The connector and wiring should be checked, before making live, to have no damage to metal parts or insulators, no solder blobs, loose strands, conducting lubricants, swarf, or any other undesired conducting particles. Circuit resistance and continuity check should be made to make certain that there are no high resistance joints or spurious conducting paths. Always use the correct application tools as specified in the Data Sheet/Catalog.
Do not permit untrained personnel to wire, assemble or tamper with connectors. For operation voltage please see appropriate national regulations.

IMPORTANT GENERAL INFORMATION
(i) Air and creepage paths/Operating voltage
The admissible operating voltages depend on the individual applications and the valid national and other applicable safety regulations.
For this reason the air and creepage path data are only reference values. Observe reduction of air and creepage paths due to PC board and/or harnessing.

(ii) Temperature
All information given are temperature limits. The operation temperature depends on the individual application.

(iii) Other important information
ITT Cannon continuously endeavours to improve their products. Therefore, ITT Cannon products may deviate from the description, technical data and shape as shown in this catalog and data sheets.

ITT Cannon manufactures the highest quality products available in the marketplace; however these products are intended to be used in accordance with the specifications in this publication. Any use or application that deviates from the stated operating specifications is not recommended and may be unsafe. No information and data contained in this publication shall be construed to create any liability on the part of ITT Cannon. Any new issue of this publication shall automatically invalidate and supersede any and all previous issues. A limited warranty applies to ITT Cannon products. Except for obligations assumed by ITT Cannon under this warranty, ITT Cannon shall not be liable for any loss, damage, cost of repairs, incidental or consequential damages of any kind, whether or not based on express or implied warranty, contract, negligence or strict liability arising in connection with the design, manufacture, sale, use or repair of the products. Product availability, prices and delivery dates are exclusively subject to our respective order confirmation form; the same applies to orders based on development samples delivered. This publication is not to be construed as an offer. It is intended merely as an invitation to make an offer. By this publication, ITT Cannon does not assume responsibility or any liability for any patent infringements or other rights of third parties which may result from its use. Reprinting this publication is generally permitted, indicating the source. However, ITT Cannon's prior consent must be obtained in all cases.

W E ’ R E P A R T O F Y O U R W O R L D

I N I N T E R C O N N E C T T E C H N O L O G Y

We are focused on your world with Innovation, Experience, Reliability & Responsiveness.

Don't blink.

No industry in the world moves faster than electronics. Take a snapshot of it today, and it all changes by tomorrow.

When you need to bring your products to market more quickly, you most likely seek a partner who moves just as fast as you do. A company at the forefront with the latest in products and service.

At ITT Cannon, we have made it our business to understand your world. Or should we say, the many parts of your world:

- The places in the world where you do business.
- The products you bring to the world.
- The service you require from suppliers to compete in the world.

At ITT Cannon, we are proud of a heritage that helped pioneer the electronics industry from its infancy in the early part of this century, to the highly advanced technologies of the present.

Today, we serve nearly every industry in which the increased demand for reliable and innovative interconnect systems is critical:

- Computers (Personal computers, portables and peripherals)
- Telecommunications (Network systems and services/LAN; mobile)
- Transportation (Automobiles, heavy-duty vehicles, rail and mass transit)
- Military/Aerospace (Commercial and military aircraft, defense and space)
- Industrial (Factory automation and instrumentation)
- Medical (Diagnostic equipment)
- Broadcasting
- Consumer Products

As ITT Cannon begins our ninth decade in business, we are proud to provide our global and regional customers with the most reliable electronic products and services available:

- Interconnects and cable assemblies
- RF connectors
- Switches and conductive rubber switchpads
- Test accessories
- I/O card, memory card and smart card interconnects
- Local area network components (copper and fiber optic)
- Turn-key network systems and services
- Customer use tooling

I N N O V A T I O N

A commitment to concurrent engineering helps you reach your markets faster

Let us bring our spirit of innovation to your world. Experienced engineering teams located throughout the globe work hand-in-hand with our customers. And since these teams are thoroughly networked together, you benefit from 24 hour-a-day concurrent engineering capability. These teams advance your project from initial product concepts to final design and into production.

Our teams are experts in computer-based design, modeling and analysis to assure robust product designs. We are also well-versed in performance simulation, as well as verification of mechanical and electrical properties. ITT Cannon utilizes Pro/ENGINEER* software which allows us to develop products and manufacturing processes concurrently, and to easily evaluate multiple design alternatives. This means better designed products, produced faster and at a lower cost.

ITT Cannon's Integrated Product Development process (IPD) allows us to minimize cycle time for first article and volume production.

*A trademark of Parametric Technology Corp.

E X P E R I E N C E

Worldwide capacity to meet all of your delivery requirements

Our decades of manufacturing experience, help us bring the latest products to your world. With automated manufacturing capacity strategically located in North America, Europe and Asia, we can produce products in either large or small quantities to quickly meet your exact requirements.

ITT Cannon is able to modify existing products to suit special customer requirements. With global manufacturing capacity in every continent, we are also able to source product from the location that best suits your needs. This means we have the flexibility to select the most advantageous shipping methods and other logistical options.

ITT Cannon has established Centers of Excellence for world class capabilities such as: Machining, stamping, surface plating, molding, cable assembly and network systems technology — all utilizing the most advanced CAM equipment.

R E L I A B I L I T Y

We don't stop at ''world class quality'' — Continuous improvement is our standard

Our goal is to bring world class electronics to your world. This commitment to perfection has helped ITT Cannon's global facilities earn ISO 9000 certification. We have invested in world class process controls for both assembly and component manufacturing.

ITT Cannon has also met or exceeded the quality system requirements from all customers who have conducted audits. We participate in ship-to-stock programs with many of these customers worldwide and have received numerous quality and preferred supplier awards from customers throughout the world in each of the industries we serve.

R E S P O N S I V E N E S S

A singular focus on responding to your needs

We know that to be responsive, we must know your world inside and out: your particular company, your industry and your challenges. Each of ITT Cannon's thousands of employees worldwide is focused on responding to you with timely and dependable information — and on ensuring that we keep the commitments we make. For instance, our globally linked computer system tracks the status of your order anywhere in the world.

You also benefit from our field applications and sales network, which provides industry-specific knowledge to help you design in the best product for your application.

Our distribution network is one of the most extensive in the industry, and can provide you off-the-shelf product to meet the most challenging delivery requirements.

A N I N V I T A T I O N T O S H A R E Y O U R W O R L D

Innovation. Experience. Reliability. Responsiveness.

At ITT Cannon, these are the strengths that we bring to our customers each and every day. Just as we have for nearly nine decades. We pride ourselves on a level of service and manufacturing know-how that has enabled us to lead our industry. Exceeding your expectations — not just meeting them — is how we approach every project.

With the world moving faster all the time, ITT Cannon is a partner who can help you get your products to market not just on time, but ahead of the competition.

At ITT Cannon, we realize that each customer we serve has their own special needs and expectations. That is why we would welcome the opportunity to discuss your project, your company, your industry — yes, your world.

"ITT" and "Cannon" are registered trademarks of ITT Inc. Specification and other data are based on information available at the time of printing, and are subject to change without notice.

Our facility is not currently certified by the DLA and this product is not covered by the QPL/QML.