REV.	ECN NO.	DATE	SIGN	DESCRIPTION
A	Initial Release	2015/07/16	Mafei	Change Rev.01 To Rev.A

ALTW DCC. DEPT. CONFIDENTIAL 2015.08.19 ISSUED

ALTW CONFIDENTIAL 2015-07-16 R&D DEPT.

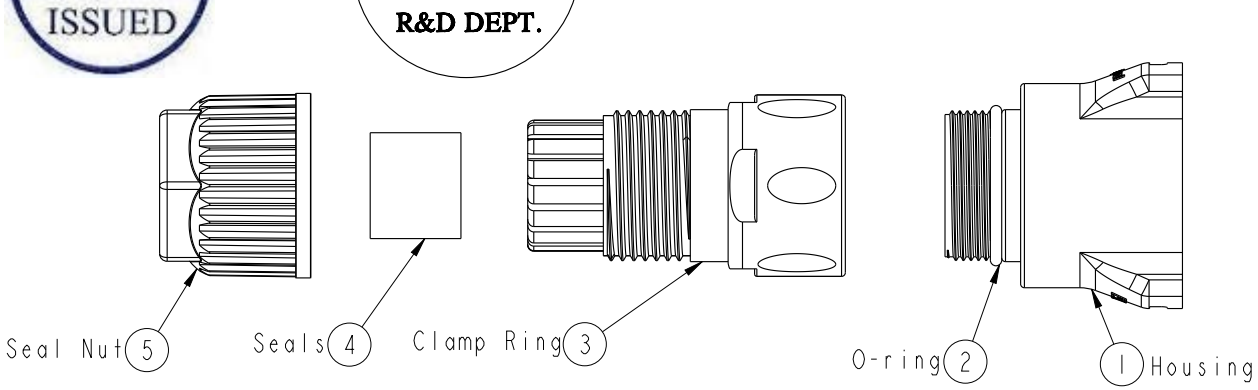

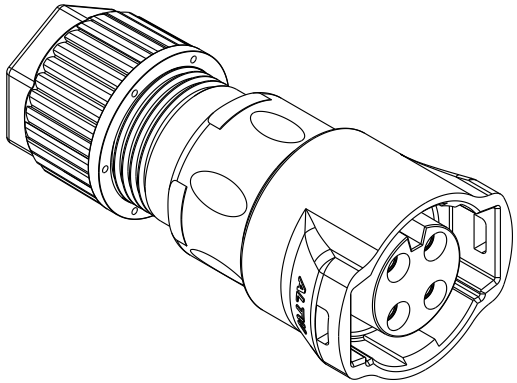

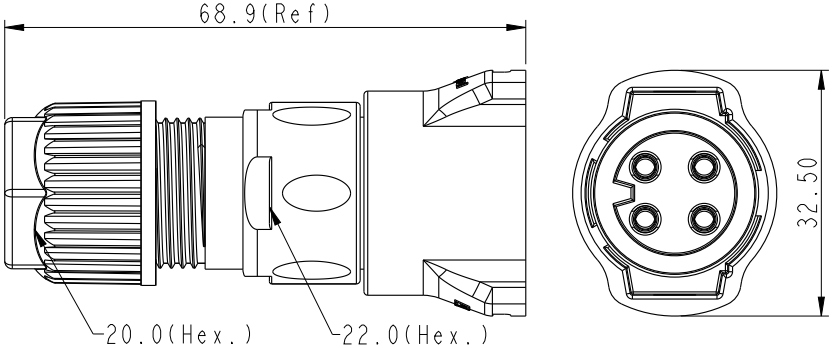

DC-XXBFFC-RL7001

- Large Size Cuttent Rating 20A
- No. Of Pin(Pin 數)
- For Cable without SR(無網尾)
- Female Connector(母座)
- Female Pin(母Pin)
- Without Cable
- IP67
- Straight(180°)
- Snap in with Latch(彈臂卡合)
- Crimp Type(鉚接式)

Note:

* (QC) Important Dimension To Check.
* Waterproof Rate: IP67 (Mating)
* Housing: M-PPE, Black, UL94 V-0, UL746C f1
* Conductor Current Rating: Max.20A Depends On Wire
* O-Ring: Silicone, Gray, UL94 V-0
* Seals: Silicone, Gray, UL94 V-0
* Clamp Ring: Nylon, Black, UL94 V-0, UL746C f1
* Sealing Nut: Nylon, Black, UL94 V-0, UL746C f1
* Seal For Cable OD: Ø9.0mm~Ø11.0mm
* Prohibiting the use of place in oils.
* Clamp Ring Recommended Tightening Torque: 4~7 Kgf.cm(0.4~0.7 N.m)
* Sealing Nut Recommended Tightening Torque: 8~15 Kgf.cm(0.8~1.5 N.m)

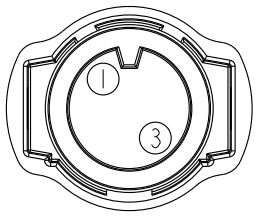

Pin 2
Pin Assignments
Front View

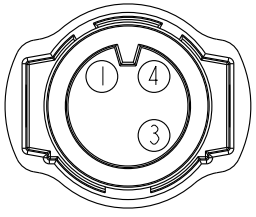

Pin 3
Pin Assignments
Front View

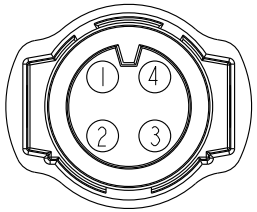

Pin 4
Pin Assignments
Front View

UNIT: mm

TOLERANCE
.X ±0.25
.XX ±0.1
.XXX ±0.05
ANGLES ±1°

TITLE: ASSY RBL F CONN F PIN			
SCALE: 1:1	SIZE: A4	SHEET 1 OF 2	
REV.: A	WC-REV.: A.1	(QC): Inspection item	

Amphenol LTW
安費諾亮泰企業股份有限公司

ITEM NO	DRAWN BY: Mafei	DATE: 2015-07-16
DWG NO: DC-XXBFFC-RL7001	CHECKED BY: Arthur	DATE: 2015-07-16
CUSTOMER: ALTW	APPROVED BY: Jerry	DATE: 2015-07-16

FMW10702-01-02A1

THIS DOCUMENT IS SUBJECT TO CHANGE WITHOUT NOTICE. IT IS CONFIDENTIAL AND A PROPERTY OF Amphenol LTW. DISCLOSURE TO THIRD PARTY HAS TO BE AUTHORIZED BY Amphenol LTW.

REV.	ECN NO.	DATE	SIGN	DESCRIPTION

Optional Part: Terminal
P/N: SAFI2C-XXG03

- 01: 1000Pcs/Reel
- 02: 500 Pcs Loose
- 03: 100 Pcs Loose

Contact Material: Copper Alloy, Gold Plated
Current Rating: 20A.
Wire Range: 12#~14#

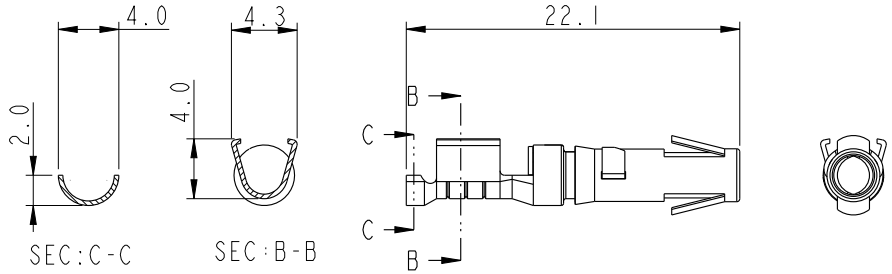

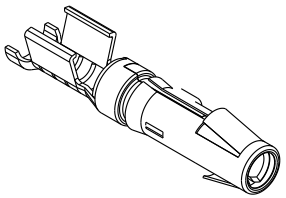

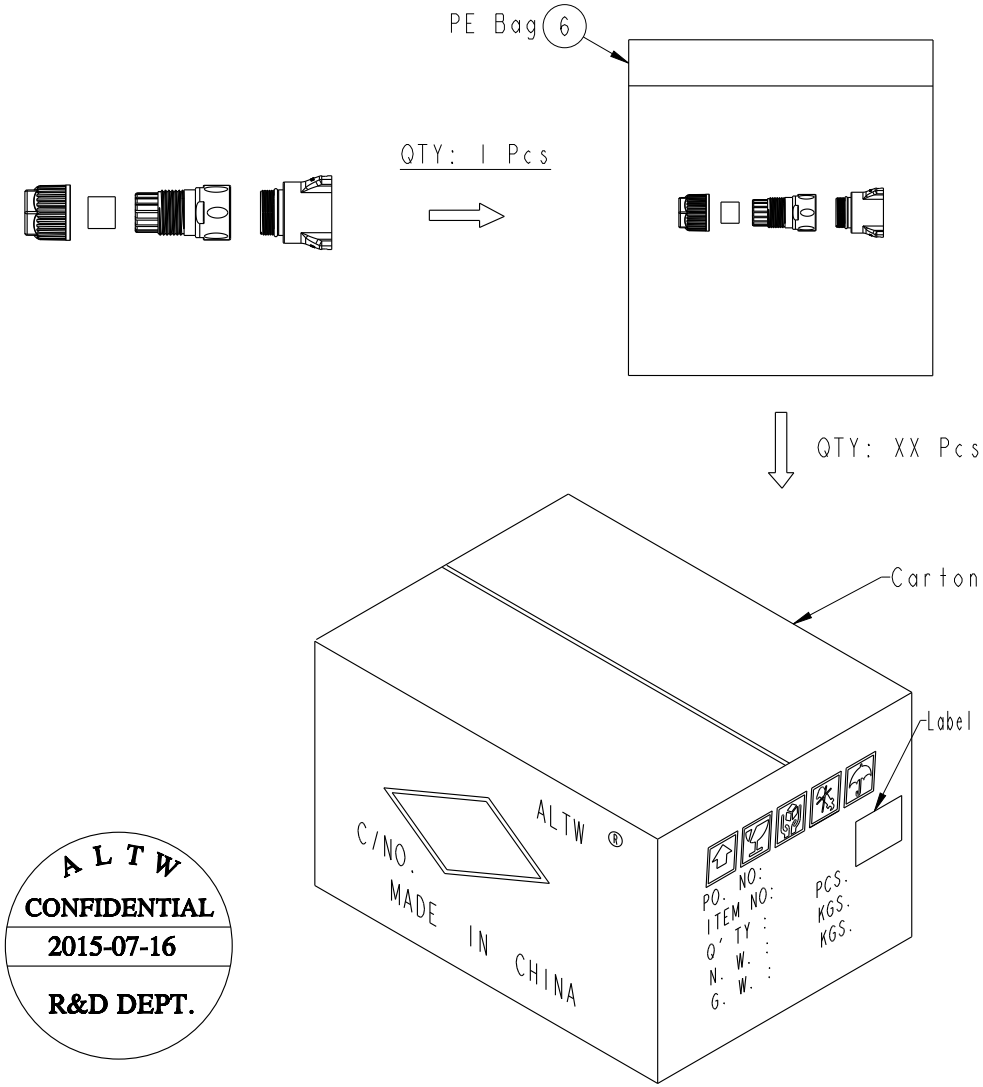

ALTW
DCC. DEPT.
CONFIDENTIAL
2015.08.19
ISSUED

Note:
* One Set Unassembled In One PE Bag.
（每一組未組裝，放置於一個PE袋，並封口）

ALTW
CONFIDENTIAL
2015-07-16
R&D DEPT.

UNIT: mm	TITLE: ASSY RBL F CONN F PIN			ITEM NO	DRAWN BY: Mafei	DATE: 2015-07-16
TOLERANCE .X ±0.25 .XX ±0.1 .XXX ±0.05 ANGLES ±1°	SCALE: 1:1	SIZE: A4	SHEET 2 OF 2	DWG NO: DC-XXBFFC-RL7001	CHECKED BY: Arthur	DATE: 2015-07-16
	REV.: A	WC-REV.: A.1	QC: Inspection item	CUSTOMER: ALTW	APPROVED BY: Jerry	DATE: 2015-07-16

Amphenol LTW
安費諾亮泰企業股份有限公司

THIS DOCUMENT IS SUBJECT TO CHANGE WITHOUT NOTICE. IT IS CONFIDENTIAL AND A PROPERTY OF Amphenol LTW. DISCLOSURE TO THIRD PARTY HAS TO BE AUTHORIZED BY Amphenol LTW.