Amphenol® Cable Glands and Cord Grips

12-055

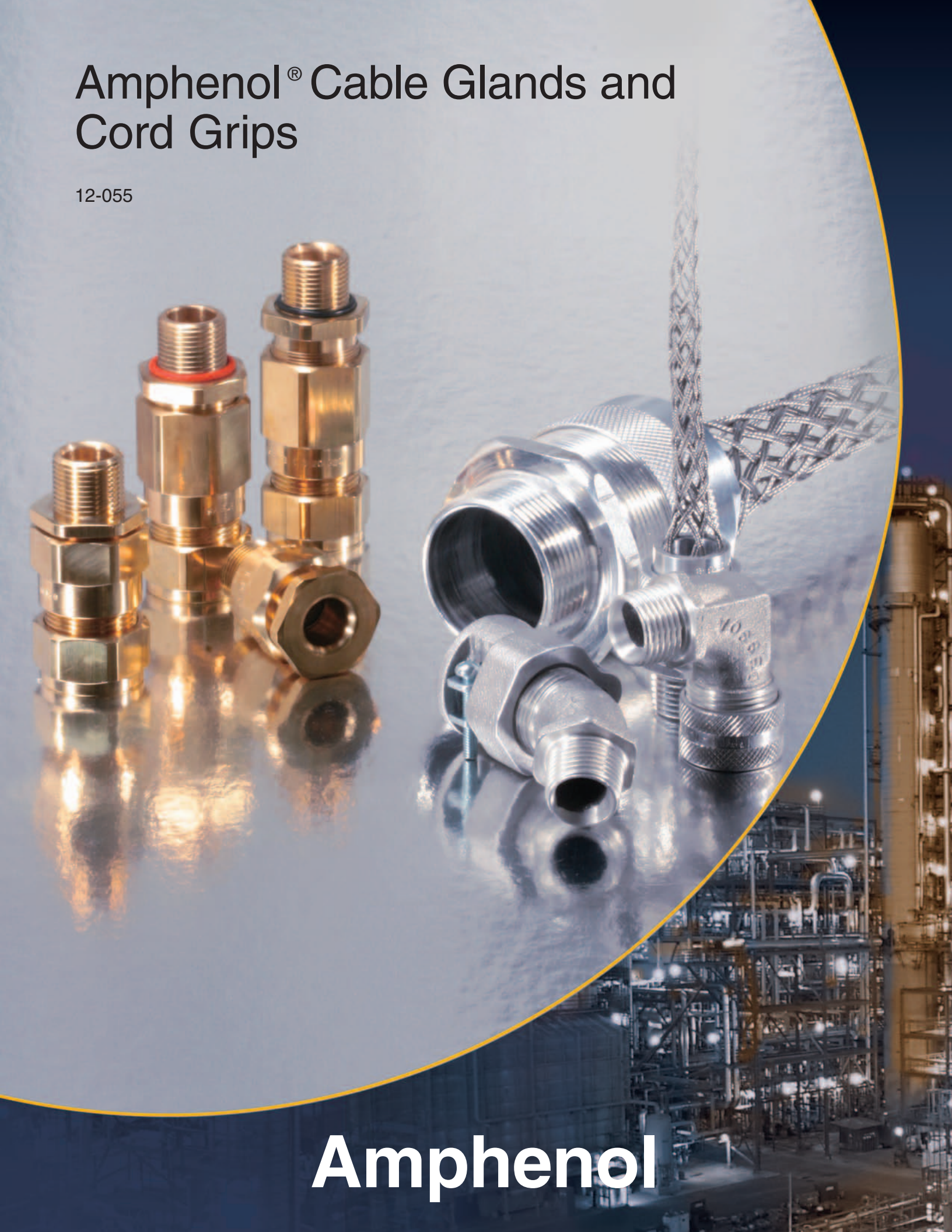

Amphenol

Table of Contents

	Page Number
Introduction	1
Amphenol® Cable Glands	2-3
ATEX Approved Glands Featuring Elastometric Seals	
EX-20	4-5
EX-25	6-7
EE-30	8-9
EX-35	10-11
EX-40	12-13
EX-45	14-15
EE-RG	16-17
ATEX Approved Glands Featuring Elastometric Seals for Flat Cable	
EX-50	18-19
EX-55	20-21
ATEX Approved Barrier Glands	
EX-60	22-23
EX-65	24-25
EX-70	26-27
EX-75 Stopper Box	28-29
Industrial Glands	
CGA	30-31
CGSS	32-33
CGDS	34-35
CGU	36-37
Accessories	
AR Adaptors & Reducers	38-39
Nylon Adaptors & Reducers	40-41
Insulated Adaptors	42-43
Mushroom Head Stopping Plugs	44-45
Nylon Mushroom Head Stopping Plugs	46-47
Type A & Type B Stopping Plugs	48-49
Breather Drain	50-51
Locknuts, Earth Tags, etc.	52
Entry Thread Reference Tables	53
Ingress Protection, Gland Weight Data	54
Amphenol®/Pyle® Cord Grips	55
Cord Grip Specifications	56-57
DB/DBM Group	58-59
DBZ Group	60-61
DBL/DBZL Group	62-63
DBA Group	64-65
DBF Group, Flared Nipples	66-67
DBZP Series	68-69
Grommets	70-71
Accessories	72-73
Addtional Amphenol® Industrial Products	74-75
Amphenol Sales Offices and Distributors Listing	76

For further information on your individual application requirements, contact:
Amphenol Corporation
Amphenol Industrial Operations
40-60 Delaware Avenue
Sidney, New York 13838-1395
Phone: 607-563-5011 Fax: 607-563-5351

View and download or print Amphenol catalogs on-line at: www.amphenol-industrial.com

Amphenol operates quality systems that are certified to ISO 9001:2000 by third party registrars.

For product specific questions regarding RoHS compliance, consult Amphenol Industrial Operations, or call the RoHS Product Compliance and Technical Support line: 1-866-315-8559

Amphenol® Cable Glands and Cord Grips

Amphenol Industrial offers more choices, more solutions, and more options than any other interconnect manufacturer in the world. In addition to the broadest range of connector solutions in the market, we also offer an extensive line of Explosion Proof and General Duty Cable Glands. We also carry a complete line of liquid tight strain-relief products in our Cord Grip line of performance cable seals. Our combination of Glands and Cord Grips makes Amphenol Industrial the one stop supplier for all your connector and cable sealing solutions.

Cable Glands

Amphenol Industrial Operations, the worldwide leader of explosion proof and hazardous environment interconnects, introduces our broad range of explosion proof and industrial cable glands. The new Cable Gland product line is designed toperform in the most demanding environments. Amphenol's complete line of EX Zone 1 and 2 rated cable glands offers our customers great flexibility. In addition, we have a complete line of general duty industrial application cable glands suitable for armored and unarmored cable.

- SIRA/ATEX certified to Exd/Exe (Class I, Div. I)
- CSA Approved
- IP66/68; Deluge; NEMA rated products
- Temperature Ranges from -40°F to +180°F
- Brass and Stainless Steel available.

Amphenol Cable Glands are RoHS Compliant.

Cord Grips

Whether you need a straight, 45°, or 90° strain relief, Amphenol's family of cord Grips has you covered. Strong, lightweight aluminum components provide a long lasting, reliable liquid tight solution. Amphenol Industrial Cord Grips offer a complete line of strain relief options that include gland nuts, mechanical clamps and basketweave cable grips. UL and CSA listed, our Cord Grips have been put to the test for over 40 years.

- Tapered rubber grommets and seal
- Machined Components
- Male and female threads available
- Tapered conduit threads

Amphenol Cord Grips are available with RoHS Compliant options. Please contact Amphenol Industrial Operations for information.

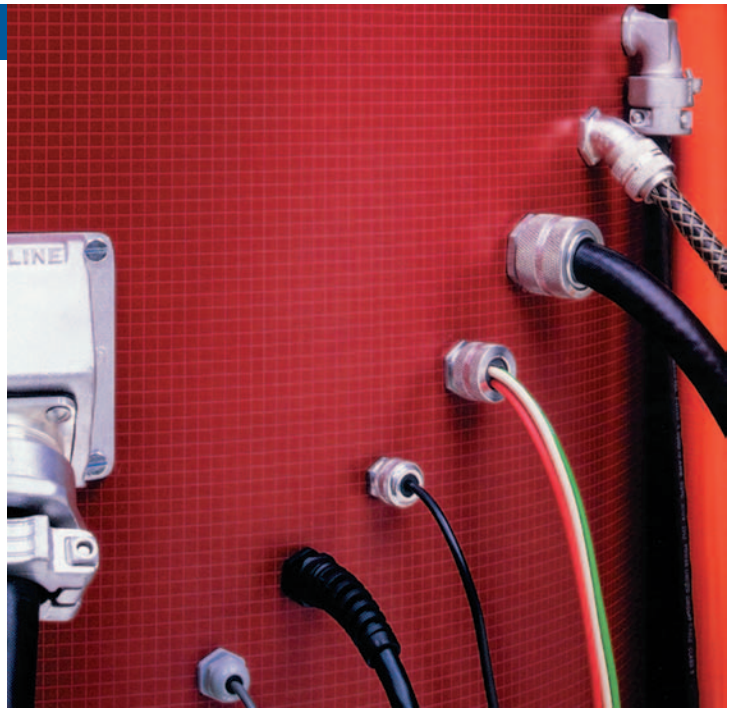

Amphenol Explosion Proof and Industrial Cable Glands

This section will provide you with information on Amphenol's complete family of cable glands, and will assist you in determining which of our glands will satisfy your specific need. If you have further questions, please contact our factory or one of the Amphenol Industrial distributors listed in the back of this catalog.

Amphenol Industrial Operations, the recognized leader in explosion proof and hazardous environment interconnects, offers a complete line of Industrial and Explosion Proof Glands. Whether part of an integrated connector solution, or as part of a bulkhead feed through, Amphenol has the solution you are looking for. Our product range includes general duty industrial cable glands meant to seal on unarmored cable, right up to our ATEX approved EX glands capable of protecting the most rugged cable in your zone rated applications.

Our EX Approved Glands also provide a complete zone rated interconnect solution when used in conjunction with our ATEX approved Star-Line EX explosion proof connector series. For additional information on the Star-Line EX product, consult Amphenol catalog 12-054.

Features & Benefits

ATEX and CSA Certified: Approved to perform in the most hazardous environments.

Variety of Styles: Cable glands available to accommodate any cable type.

IP Ratings Included: Watertight seals allow for both indoor and outdoor applications.

Machined Components made from brass and stainless steel.

Complete Line of Accessories: Including locknuts, washers, and earth tags.

Entry Thread Flexibility: Both metric and NPT threads available on most styles.

Applications

- Oil and Gas Exploration Equipment
- Machine and Heavy Electronics
- Pharmaceutical Manufacturing Facilities
- Production Platforms
- Chemical and Paint Manufacturing Facilities
- Robotics and Welding Equipment
- Process Control Equipment
- Motors and Generators

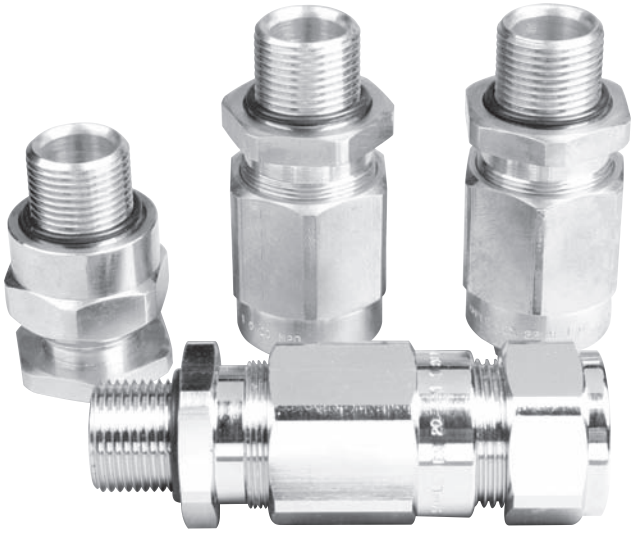

Cable Gland Selection Guide

This table is designed to be a quick reference to the cable glands found in this publication.

Gland Type	Outer Seal	Inner Seal	Lead Option	Armor Clamp	Certification	IP Rating	Page Number
ATEX/CSA Approved Glands with Elastomeric Seals							
EX-20	✓	✓	✓	✓	Exd/Exe	Deluge, IP66, 68 NEMA, 4X	4
EX-25	✓	✓	✓	✓	Exd/Exe (Not CSA)	IP66, IP67	6
EE-30	✓	×	✓	×	Exe (Not CSA)	IP66	8
EX-35	✓	×	×	×	Exd/Exe	IP66 IP68 NEMA 4X	10
EX-40	✓ x2	×	×	×	Exd/Exe	IP66 IP68 NEMA 4X	12
EX-45	✓	×	×	×	Exd/Exe	IP66 IP68 NEMA 4X	14
EE-RG	✓	×	×	×	Exe	IP66 IP68	16
ATEX/CSA Approved Glands with Elastomeric Seals for Flat Cable							
EX-50	Flat Cable	Flat Cable	×	Braid	Exd/Exe	IP66	18
EX-55	Flat Cable	×	×	×	Exd/Exe	IP68	20
ATEX Approved Compound Filled Barrier Glands							
EX-60	✓	Compound	✓	✓	Exd	Deluge, IP66, IP68 NEMA, 4X	22
EX-65	Compound	Compound	✓	×	Exd	Deluge, IP66, IP68 NEMA, 4X	24
EX-70	✓	Compound	✓	×	Exd	Deluge, IP66, IP68 NEMA, 4X	26
EX-75 (stopper box)	×	Compound	×	×	Exd	Deluge, IP66, IP68 NEMA, 4X	28
Non Hazardous Industrial Glands							
CGA	×	×	×	✓	Industrial (BS6121)	IP30	30
CGSB	✓	×	×	✓	Industrial	IP66	32
CGDS	✓	✓	✓	✓	Industrial	IP67	34
CGU	✓	×	✓	×	Industrial	IP66, IP66	36

ATEX/CSA Approved Glands with Elastomeric Seals

EX-20

EX-20 type glands provide a seal on the inner sheath, a seal on the outer sheath, an entry thread seal and a universal armor clamp for armored cable. The armor clamp provides an electrical bond between the cable armor and the gland. EX-20 glands can also be used to terminate unarmored or lead sheathed cables. EX-20 type glands maintain Flameproof Exd and Increased Safety Exe methods of explosion protection; IP66, 68 to 25 meters and is deluge resistant. An integral 'O' ring entry thread seal is fitted to metric versions as standard.

EXAMPLE PART NUMBER

EX-20 [W] [X] [Y] [R] [YY] [ZZ]

- **W** - Gland material (B = Brass / S = Stainless Steel)
- **X** - Seal Material (1 = Neoprene / 3 = Silicone)
- **Y** - Plating (0 = No Plating / 1 = Nickel / 2 = Tin / 3 = Zinc / 4 = Electroless Nickel)
- **R** - Reduced bore option
- **YY** - Gland size (Cable Range)
- **ZZ** - Entry thread

Sample: EX-20-B-1-0-R-20-M20

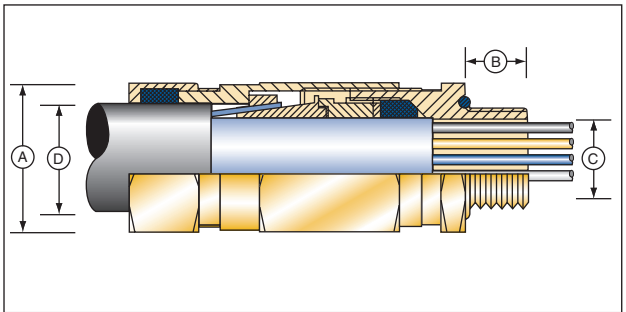

DESIGN STANDARD

EN50014:1998, EN50018:2000, EN50019:2000 & EN 50281-1-1:1998

CERTIFICATION

ATEX II 2 GD, E Exd IIC / E Exe II
CSA Exd IIC/Exe II 4X, Class 1, Zone 1

CERTIFICATE

Sira 05ATEX1120X - Ex Notified Body No. 0518
Pending

GLAND MARKING

CENELEC and ATEX
Example:
Amphenol 13838 USA EX-20-B-1-0-R-20-M20 XX Sira 05ATEX1120X Ex II 2GD EExdIIC / EExe II (XX = Year Code)

APPLICATION

EExd Equipment
EX-20 type glands will only maintain Flameproof Exd integrity when used with cable that is substantially round and compact with extruded bedding. The cable shall be deemed to be effectively filled. Ref: IEC60079-14:2002 Section 10.4.2

Gas Group	Internal Ignition Source	Enclosure Volume	Which Zone	Use Type EX-20 Gland
IIC, IIB, IIA	NO	Any	Zone 1 or 2	YES
IIB, IIA	YES	Any	Zone 2	YES
IIB, IIA	YES	2 liters or less	Zone 1	YES

EExe Equipment	Other Equipment
Gas Group II, Zones 1 and 2	Ignitable Dust, Zones 21 and 22

INGRESS PROTECTION

IP66 and IP68 @ 25 meters, Enclosure Type 4X
Meets the requirements of DTS01 1991

OPERATING TEMPERATURES

Standard Seals -20°C to +85°C
Extended Seals - 60°C to +180°C (Silicone seals)

MATERIALS

Brass CZ121 (EX-20-B)
316 Stainless Steel (EX-20-S)

Inner and outer sheath material: Standard (EX-20-W-1) Neoprene, black. Option (EX-20-W-3) Silicone, white.
Reduced bore outer sheath seal (R) Silicone, red (EX-20-W-X-Y-R)

Entry thread seal: Nitrile is supplied with neoprene seal version. Silicone is supplied with silicone seal version

THREADS	SEALS	PLATING
ISO Metric; NPT; NPS; ISO Pipe Thread (BSP Taper, BSP Parallel)	Extended operating temperature -60°C to +180°C, halogen free versions: Brass (EX-20-B-3); 316 Stainless Steel (EX-20-S-3)	Nickel (1); Tin (2); Zinc (3); Electroless Nickel (4)

ACCESSORIES

Locknut - Brass (EX-BLN); 316 Stainless Steel (EX-SLN)
Earth Tag - Brass (EX-BET), 316 Stainless Steel (EX-SET)
IP Washer - Nylon (EX-NSW); Red Fibre (EX-FSW)
Serrated Lock Washer - 316 Stainless Steel (EX-SSW), Galvanised Steel (EX-GSW)
Shroud - PVC (EX-PVC)

Gland and accessory kits:
K1- includes gland, locknut, earthtag, nylon IP washer and PVC shroud

Gland Size	Entry Threads		Entry Thread Length	Max Across Corners	Max Protrusion Length	Gland Seal Range						Armor Acceptance Range	Shroud Size
						Cable Inner Sheath [C]		Cable Outer Sheath [D]					
								Standard		Reduced (R)			
	Metric	NPT/BSP	[B]	[A]		Min	Max	Min	Max	Min	Max		
16	M20	N1 or N2	16	28.0	78.0	3.4	8.4	9.0	13.5	6.7	10.3	0.15 - 1.25	L24
20s	M20	N1 or N2	16	28.0	78.0	7.2	11.7	11.5	16.0	9.4	12.5	0.15 - 1.25	L24
20	M20	N1 or N2	16	33.0	78.0	9.4	14.0	15.5	21.1	12.0	17.6	0.15 - 1.25	EL30
25	M25	N2 or N3	16	41.4	90.0	13.5	20.0	20.3	27.4	16.8	23.9	0.15 - 1.60	EL38
32	M32	N3 or N4	16	50.6	105.0	19.5	26.3	26.7	34.0	23.2	30.5	0.15 - 2.00	EL46
40	M40	N4 or N5	16	60.5	113.0	23	32.2	33.0	40.6	28.6	36.2	0.20 - 2.00	EL55
50s	M50	N5 or N6	16	71.5	125.0	28.1	38.2	39.4	46.7	34.8	42.4	0.30 - 2.50	EL65
50	M50	N6	16	71.5	125.0	33.1	44.1	45.7	53.2	41.1	48.5	0.30 - 2.50	EL65
63s	M63	N6 or N7	19	88.0	125.0	39.2	50.1	52.1	59.5	47.5	54.8	0.30 - 2.50	EL80
63	M63	N7	19	88.0	125.0	46.7	56.0	58.4	65.8	53.8	61.2	0.30 - 2.50	EL80
75s	M75	N7 or N8	19	99.0	131.0	52.1	62.0	64.8	72.2	60.2	68.0	0.30 - 2.50	EL90
75	M75	N8	19	99.0	131.0	58.0	68.0	71.1	78.0	66.5	73.4	0.30 - 2.50	EL90
80	M80 x 2	N8 or N9	25	115.2	170.0	62.2	72.0	77.0	84.0	-	-	0.45 - 3.15	L104
80H	M80 x 2	N8 or N9	25	115.2	170.0	62.2	72.0	79.6	90.0	-	-	0.45 - 3.15	L104
85	M85 x 2	N8 or N9	25	115.2	170.0	69.0	78.0	79.6	90.0	75.0	85.4	0.45 - 3.15	L104
90	M90 x 2	N9 or N10	25	125.7	170.0	74.0	84.0	88.0	96.0	-	-	0.45 - 3.15	L114
90H	M90 x 2	N9 or N10	25	125.7	170.0	74.0	84.0	92.0	102.0	-	-	0.45 - 3.15	L114
100	M100 x 2	N9 or N10	25	125.7	170.0	82.0	90.0	92.0	102.0	87.4	97.4	0.45 - 3.15	L114

All Dimensions are in millimeters

NOTES:

- NPT entry thread reference details on page 53.
- Gland Size does not necessarily equate to the entry thread size.
- Integral entry thread seal option is not available for glands with tapered entry threads. IP washers can be supplied if required.
- Please note that dimensions (A) and (B) may differ for glands with non-Metric entry threads. Please refer to our thread data tables for specific dimensions.
- Unless otherwise stated ISO Metric entry threads have a 1.5mm pitch.
- For Flameproof Exd applications the female thread into which the gland is to be fitted must comply with clause 5.3 of EN 50018:2000 (clause 5.3 IEC 79-1) and an engagement of at least 5 full threads must be achieved for parallel threads and should be achieved for tapered threads.
- Where EX-20 type glands are fitted into non-metallic Increased Safety Exe enclosures they must be included within the earth circuit of the system.
- The user should seek expert advice if intending to combine flammable gases and combustible dusts in one environment/installation.
- Full assembly instructions are supplied with glands, the instructions must be read prior to installation and adhered to in full.
- When used to terminate unarmored cable, the gland is suitable only for fixed installations. The cable must be clamped near the gland to prevent pulling and twisting.

ATEX/CSA Approved Glands with Elastomeric Seals

EX-25

EX-25 type glands provide a seal on the inner sheath, a seal on the outer sheath and an armor specific clamp for armored cable. The armor clamp provides an electrical bond between the cable armor and the gland. EX-25 type connectors can be used to terminate lead sheath cables. EX-25 type glands maintain Flameproof Exd and Increased Safety Exe methods of explosion protection and IP66, IP67.

EXAMPLE PART NUMBER

EX-25* [W] [X] [Y] [R] [YY] [ZZ]

- ***** - Armor Types (W = SWA / X = SWB / Z = STA)
- **W** - Gland material (B = Brass / S = Stainless Steel)
- **X** - Seal Material (1 = Neoprene / 3 = Silicone / 4 = No Seal)
- **Y** - Plating (0 = No Plating / 1 = Nickel / 2 = Tin / 3 = Zinc / 4 = Electroless Nickel)
- **R** - Reduced bore option
- **YY** - Gland size (Cable Range)
- **ZZ** - Entry Thread

Sample: EX-25-W-B-1-0-R-20-M20

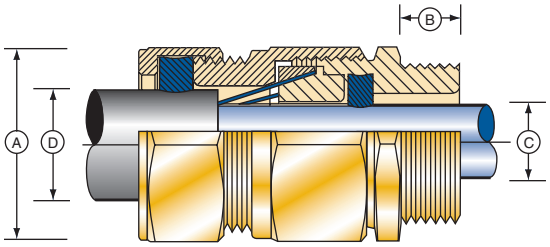

DESIGN STANDARD

EN50014:1998, EN50018:2000, EN50019:2000 and EN 50281-1-1:1998

CERTIFICATION

ATEX II 2 GD, E Exd IIC / E Exe II

CERTIFICATE

SIRA 05ATEX1122X - Ex Notified Body No. 0518

GLAND MARKING

CENELEC and ATEX

Example:

Amphenol 13838 USA EX-25W-B-1-0-R-20-M20 XX SIRA 05ATEX1122X Ex II 2GD IP67 EExdIIC / EExe II (XX = Year Code)

APPLICATION

EExd Equipment

EX-25 type glands will only maintain Flameproof Exd integrity when used with cable that is substantially round and compact with extruded bedding. The cable shall be deemed to be effectively filled. Ref: IEC60079-14:2002 Section 10.4.2

Gas Group	Internal Ignition Source	Enclosure Volume	Which Zone	Use Type EX-25 Gland
IIC, IIB, IIA	NO	Any	Zone 1 or 2	YES
IIB, IIA	YES	Any	Zone 2	YES
IIB, IIA	YES	2 litres or less	Zone 1	YES

EExe Equipment	Other Equipment
Gas Group II, Zones 1 and 2	Ignitable Dust, Zones 21 and 22

INGRESS PROTECTION

IP66 and IP67

OPERATING TEMPERATURES

Standard Seals -20°C to +80°C
Silicone Seals - 60°C to +180°C

VARIATIONS

Omission of outer seal:
Brass (EX-25*-B-4); 316 Stainless Steel (EX-25-*-S-4)

MATERIALS

Brass CZ121 (EX-25-*-B)
316 Stainless Steel (EX-25-*-S)

SEALS

Extended operating temperature -60°C to +180°C, halogen free versions:
Brass (EX-25-B-3); 316 Stainless Steel (EX-25-S-3)

THREADS

ISO Metric; NPT; NPS; ISO Pipe Thread (BSP Taper, BSP Parallel)

CLAMPS

SWA steel wire armor (EX-25-W)
SWB woven steel wire armor (EX-25-X)
STA steel tape armor (EX-25-Z)

PLATING

Nickel (1); Tin (2); Zinc (3); Electroless Nickel (4)

ACCESSORIES

Locknut - Brass (EX-BLN); 316 Stainless Steel (EX-SLN)
Earth Tag - Brass (EX-BET), 316 Stainless Steel (EX-SET)
IP Washer - Nylon (EX-NSW); Red Fibre (EX-FSW)
Serrated Lock Washer - 316 Stainless Steel (EX-SSW), Galvanised Steel (EX-GSW)
Shroud - PVC (EX-PVC); PCP (EX-PCP); Low Smoke Zero Halogen (EX-LSH)

Gland and accessory kits:
K2 - includes gland, locknut, earthtag, fibre IP washer and PVC shroud
K3 - includes gland, locknut, earthtag, nylon IP washer and PCP shroud
K4 - includes brass gland, brass locknut, brass earthtag, IP washer and zero halogen shroud

Gland Size	Entry Threads		Entry Thread Length [B]	Max Across Corners [A]	Max Protrusion Length	Gland Seal Range						Armour Acceptance Range		Shroud Size
						Cable Inner Sheath [C]		Cable Outer Sheath [D]						
								Standard		Reduced (R)				
	Metric	NPT/BSP				Min	Max	Min	Max	Min	Max	W	XZ	
16	M20	N1 or N2	16	26.5	58.0	4.0	8.4	8.4	13.5	4.9	10.0	0.90	0.15-0.35	L24
20s	M20	N1 or N2	16	26.5	58.0	8.0	11.7	11.5	16.0	9.4	12.5	0.90-1.25	0.15-0.35	L24
20	M20	N1 or N2	16	33.0	58.0	6.7 *	14.0	15.5	21.1	12.0	17.6	0.90-1.25	0.15-0.50	L30
25	M25	N2 or N3	16	41.4	58.0	13.0	20.0	20.3	27.4	16.8	23.9	1.25-1.60	0.15-0.50	L38
32	M32	N3 or N4	16	50.6	65.0	19.0	26.3	26.7	34.0	23.2	30.5	1.60-2.00	0.15-0.55	L46
40	M40	N4 or N5	16	60.5	72.0	25.0	32.2	33.0	40.6	28.6	36.2	1.60-2.00	0.20-0.60	L55
50s	M50	N5 or N6	16	71.5	73.0	31.5	38.2	39.4	46.7	34.8	42.4	2.00-2.50	0.20-0.60	L65
50	M50	N6	16	71.5	73.0	36.5	44.1	45.7	53.2	41.1	48.5	2.00-2.50	0.30-0.80	L65
63s	M63	N6 or N7	19	88.0	76.0	42.5	50.1	52.1	59.5	47.5	54.8	2.50	0.30-0.80	L80
63	M63	N7	19	88.0	76.0	49.5	56.0	58.4	65.8	53.8	61.2	2.50	0.30-0.80	L80
75s	M75	N7 or N8	19	99.0	82.0	54.5	62.0	64.8	72.2	60.2	68.0	2.50	0.30-1.00	L90
75	M75	N8	19	99.0	82.0	60.5	68.0	71.1	78.0	66.5	73.4	2.50	0.30-1.00	L90
80	M80 x 2	N8 or N9	25	115.2	110.0	62.2	72.0	77.0	84.0	-	-	3.15	0.45-1.00	L104
80H	M80 x 2	N8 or N9	25	115.2	110.0	62.2	72.0	79.6	90.0	-	-	3.15	0.45-1.00	L104
85	M85 x 2	N8 or N9	25	115.2	110.0	69.0	78.0	79.6	90.0	75.0	85.4	3.15	0.45-1.00	L104
90	M90 x 2	N9 or N10	25	125.7	110.0	74.0	84.0	88.0	96.0	-	-	3.15	0.45-1.00	L114
90H	M90 x 2	N9 or N10	25	125.7	110.0	74.0	84.0	92.0	102.0	-	-	3.15	0.45-1.00	L114
100	M100 x 2	N9 or N10	25	125.7	110.0	82.0	90.0	92.0	102.0	87.4	97.4	3.15	0.45-1.00	L114

All Dimensions are in Millimeters

NOTES:

*** EX-25 gland size 20, the silicone inner seal only seals to a minimum of 11.0mm and NOT 6.7mm.**

- NPT entry thread reference details on page 53.
- Gland Size does not necessarily equate to the entry thread size.
- "W" refers to the wire diameter in a steel wire armored cable.
- "XZ" refers to the wire diameter in a woven steel wire armored cable or the tape thickness in a steel tape armored cable.
- Please note that dimensions (A) and (B) may differ for glands with non-Metric entry threads. Please refer to our thread data tables for specific dimensions.
- Unless otherwise stated ISO Metric entry threads have a 1.5mm pitch.
- For Flameproof Exd applications the female thread into which the gland is to be fitted must comply with clause 5.3 of EN 50018:2000 (clause 5.3 IEC 79-1) and an engagement of at least 5 full threads must be achieved for parallel threads and should be achieved for tapered threads.
- Where EX-25 type glands are fitted into non-metallic Increased Safety Exe enclosures they must be included within the earth circuit of the system.
- The user should seek expert advice if intending to combine flammable gases and combustible dusts in one environment/installation.
- Full assembly instructions are supplied with glands, the instructions must be read prior to installation and adhered to in full.

ATEX/CSA Approved Glands with Elastomeric Seals

EE-30

EE-30 type glands provide a seal on the outer sheath and an armor specific clamp for armored cable. The armor clamp provides an electrical bond between the cable armor and the gland. EE-30 type glands maintain Increased Safety Exe methods of explosion protection and IP66.

EXAMPLE PART NUMBER

EE-30* [W] [X] [Y] [R] [YY] [ZZ]

- ***** - Armor Type (W = SWA / X = SWB / Z = STA)
- **W** - Gland material (B = Brass / S = Stainless Steel)
- **X** - Seal Material (1 = Neoprene / 3 = Silicone)
- **Y** - Plating (0 = No Plating / 1 = Nickel / 2 = Tin / 3 = Zinc / 4 = Electroless Nickel)
- **R** - Reduced bore option
- **YY** - Gland size (Cablle Range)
- **ZZ** - Entry thread

Sample: EE-30W-B-1-0-R-20-M20

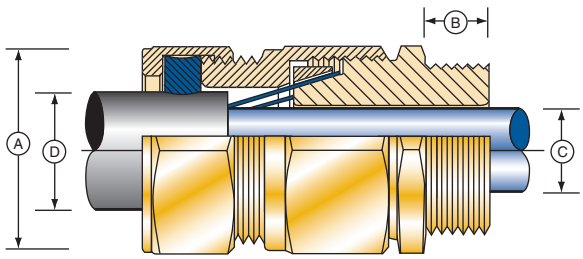

DESIGN STANDARD

EN 50014:1998, EN 50019:2000 and EN 50281-1-1:1998

CERTIFICATION

ATEX II 2 GD, E Exe II

CERTIFICATE

SIRA 05ATEX1122X - Ex Notified Body No. 0518

GLAND MARKING

CENELEC and ATEX

Example:

Amphenol 13838 USA EE-30W-B-1-0-R-20-M20 XX SIRA 05ATEX1122X Ex II 2GD IP66 EExe II (XX = Year Code)

APPLICATION

EExe Equipment	Other Equipment
Gas Group II, Zones 1 and 2	Ignitable Dust, Zones 21 and 22

INGRESS PROTECTION

IP66

OPERATING TEMPERATURES

Standard Seals -20°C to +80°C
Silicone Seals - 60°C to +180°C

MATERIALS

Brass CZ121 (EE-30*-B)
316 Stainless Steel (EE-30*-S)

SEALS

Extended operating temperature -60°C to +180°C, halogen free versions:
Brass (EE-30*-B-3); 316 Stainless Steel (EE-30*-S-3)

THREADS

ISO Metric; NPT; NPS; ISO Pipe Thread (BSP Taper, BSP Parallel)

CLAMPS

SWA steel wire armor (EE-30-W)
SWB woven steel wire armor (EE-30-X)
STA steel tape armor (EE-30-Z)

PLATING

Nickel (1); Tin (2); Zinc (3); Electroless Nickel (4)

ACCESSORIES

Locknut - Brass (EX-BLN); 316 Stainless Steel (EX-SLN)
Earth Tag - Brass (EX-BET), 316 Stainless Steel (EX-SET)
IP Washer - Nylon (EX-NSW); Red Fibre (EX-FSW)
Serrated Lock Washer - 316 Stainless Steel (EX-SSW), Galvanised Steel (EX-GSW)
Shroud - PVC (EX-PVC); PCP (EX-PCP); Low Smoke Zero Halogen (EX-LSH)

Gland and accessory kits:
K1 - includes gland, locknut, earthtag, nylon IP washer and PVC shroud
K4 - includes brass gland, brass locknut, brass earthtag, IP washer and zero halogen shroud

Gland Size	Entry Threads		Entry Thread Length [B]	Max Across Corners [A]	Max Protrusion Length	Gland Seal Range						Armour Acceptance Range		Shroud Size
						Cable Inner Sheath [C]		Cable Outer Sheath [D]						
								Standard		Reduced (R)				
	Metric	NPT/BSP				Min	Max	Min	Max	Min	Max	W	XZ	
16	M20	N1 or N2	10	26.5	54.0	-	11.7	9.0	13.5	6.7	10.3	0.90-1.25	0.15-0.35	L24
20s	M20	N1 or N2	10	26.5	54.0	-	11.7	11.5	16.0	9.4	12.5	0.90-1.25	0.15-0.35	L24
20	M20	N1 or N2	10	33.0	54.0	-	14.0	15.5	21.0	12.0	17.6	0.90-1.25	0.15-0.50	L30
25	M25	N2 or N3	10	41.4	54.0	-	20.0	20.3	27.4	16.8	23.9	1.25-1.60	0.15-0.50	L38
32	M32	N3 or N4	10	50.6	60.0	-	26.3	26.7	34.0	23.2	30.5	1.60-2.00	0.15-0.55	L46
40	M40	N4 or N5	15	60.5	67.0	-	32.2	33.0	40.6	28.6	36.2	1.60-2.00	0.20-0.60	L55
50s	M50	N5 or N6	15	71.5	67.0	-	38.2	39.4	46.7	34.8	42.4	2.00-2.50	0.20-0.60	L65
50	M50	N6	15	71.5	67.0	-	44.1	45.7	53.2	41.1	48.5	2.00-2.50	0.30-0.80	L65
63s	M63	N6 or N7	15	88.0	69.0	-	50.1	52.1	59.5	47.5	54.8	2.50	0.30-0.80	L80
63	M63	N7	15	88.0	69.0	-	56.0	58.4	65.8	53.8	61.2	2.50	0.30-0.80	L80
75s	M75	N7 or N8	15	99.0	77.0	-	62.0	64.8	72.2	60.2	68.0	2.50	0.30-1.00	L90
75	M75	N8	15	99.0	77.0	-	68.0	71.1	78.0	66.5	73.4	2.50	0.30-1.00	L90
80	M80 x 2	N8 or N9	20	115.2	104.0	-	72.0	77.0	84.0	-	-	3.15	0.45-1.00	L104
80H	M80 x 2	N8 or N9	20	115.2	104.0	-	72.0	79.6	90.0	-	-	3.15	0.45-1.00	L104
85	M85 x 2	N8 or N9	20	115.2	104.0	-	78.0	79.6	90.0	75.0	85.4	3.15	0.45-1.00	L104
90	M90 x 2	N9 or N10	20	125.7	104.0	-	84.0	88.0	96.0	-	-	3.15	0.45-1.00	L114
90H	M90 x 2	N9 or N10	20	125.7	104.0	-	84.0	92.0	102.0	-	-	3.15	0.45-1.00	L114
100	M100 x 2	N9 or N10	20	125.7	104.0	-	90.0	92.0	102.0	87.4	97.4	3.15	0.45-1.00	L114

All Dimensions are in Millimeters

NOTES:

- NPT entry thread reference details on page 53.
- Gland Size does not necessarily equate to the entry thread size.
- "W" refers to the wire diameter in a steel wire armored cable.
- "XZ" refers to the wire diameter in a woven steel wire armored cable or the tape thickness in a steel tape armored cable.
- Please note that dimensions (A) and (B) may differ for glands with non-Metric entry threads. Please refer to our thread data tables for specific dimensions.
- Unless otherwise stated ISO Metric entry threads have a 1.5mm pitch.
- Where EX-30 type glands are fitted into non-metallic Increased Safety Exe enclosures they must be included within the earth circuit of the system.
- The user should seek expert advice if intending to combine flammable gases and combustible dusts in one environment/installation.
- Full assembly instructions are supplied with glands, the instructions must be read prior to installation and adhered to in full.

ATEX/CSA Approved Glands with Elastomeric Seals

EX-35

EX-35 type glands provide a single pull resistant seal on the outer sheath of unarmoured cable. EX-35 type glands maintain Flameproof Exd and Increased Safety Exe methods of explosion protection and IP66, IP68 to 25 meters. Integral O-Ring entry thread seal, as illustrated, is provided as standard on metric versions.

EXAMPLE PART NUMBER

EX-35 [W] [X] [Y] [YY] [ZZ]

- **W** - Gland material (B = Brass / S = Stainless Steel)
- **X** - Seal Material (1 = Neoprene / 3 = Silicone)
- **Y** - Plating (0 = No Plating / 1 = Nickel / 2 = Tin / 3 = Zinc / 4 = Electroless Nickel)
- **YY** - Gland size (Cable Range)
- **ZZ** - Entry thread

Sample: EX-35-B-1-0-20-M20

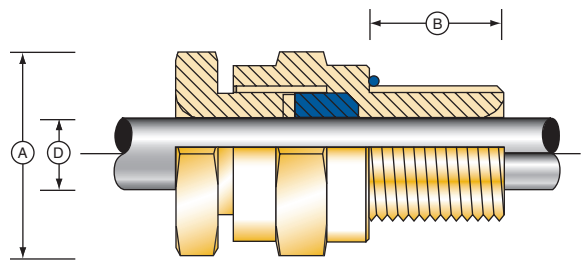

DESIGN STANDARD

EN50014:1998, EN50018:2000, EN50019:2000 and EN 50281-1-1:1998

CERTIFICATION.

ATEX II 2 GD, E Exd IIC / E Exe II
CSA Exd IIC/Exe II 4X, Class 1, Zone 1

CERTIFICATE

SIRA 05ATEX1123X - Ex Notified Body No. 0518
Pending

GLAND MARKING

CENELEC and ATEX
Example:
Amphenol 13838 USA EX-35-B-1-0-20-M20 XX SIRA 05ATEX1123X Ex II 2GD IP68 EExdIIC / EExe II (XX = Year Code)

APPLICATION

EExd Equipment
EX-35 type glands will only maintain Flameproof Exd integrity when used with cable that is substantially round and compact with extruded bedding. The cable shall be deemed to be effectively filled. Ref: IEC60079-14:2002 Section 10.4.2

Gas Group	Internal Ignition Source	Enclosure Volume	Which Zone	Use EX-35 Gland
IIC, IIB, IIA	NO	2 liters or less	Zone 1 or 2	YES
IIB, IIA	YES	Any	Zone 2	YES
IIB, IIA	YES	2 liters or less	Zone 1	YES

EExe Equipment	Other Equipment
Gas Group II, Zones 1 and 2	Ignitable Dust, Zones 21 and 22

INGRESS PROTECTION

IP66 and IP68 @ 25 meters, Enclosure Type 4X

OPERATING TEMPERATURES

Standard Seals -20°C to +80°C
Silicone Seals - 60°C to +180°C

MATERIALS

Brass CZ121 (EX-35-B)
316 Stainless Steel (EX-35-S)

Outer sheath seal material:
Standard (EX-35-W-1) Neoprene, black. Option (EX-35-W-3) Silicone, white.
Integral entry thread seal: Nitrile is supplied with neoprene outer seal version. Silicone is supplied with silicone outer seal version.

THREADS
ISO Metric; NPT; NPS; ISO Pipe Thread (BSP Taper, BSP Parallel)

SEALS
Extended operating temperature -60°C to +180°C, halogen free versions: Brass (EX-35-B-3); 316 Stainless Steel (EX-35-S-3)

PLATING
Nickel (1); Tin (2); Zinc (3); Electroless Nickel (4)

ACCESSORIES

Locknut - Brass (EX-BLN); 316 Stainless Steel (EX-SLN)
Earth Tag - Brass (EX-BET), 316 Stainless Steel (EX-SET)
IP Washer - Nylon (EX-NSW); Red Fibre (EX-FSW)
Serrated Lock Washer - 316 Stainless Steel (EX-SSW), Galvanised Steel (EX-GSW)
Shroud - PVC (EX-SPVC); PCP (EX-SPCP); Low Smoke Zero Halogen (EX-LSH)

Gland and accessory kits:
K2 - includes gland, locknut, fiber IP washer and PVC shroud
K3- includes gland, locknut, nylon IP washer and PCP shroud

Gland Size	Entry Threads		Entry Thread Length [B]	Max Across Corners [A]	Max Protrusion Length	Gland Seal Rance Cable Outer/Lead Sheath		Shroud Size
	Metric	NPT/BSP				Min	Max	
16	M20	N1 or N2	16	28.0	33.0	4.0	8.4	L24
20s	M20	N1 or N2	16	28.0	33.0	7.2	11.7	L24
20	M20	N1 or N2	16	33.0	33.0	9.6	14.0	L30
25	M25	N2 or N3	16	41.4	33.0	13.5	20.0	L38
32	M32	N3 or N4	16	50.6	33.0	19.5	26.3	L46
40	M40	N4 or N5	16	60.5	37.0	23.0	32.2	L55
50s	M50	N5 or N6	16	71.5	37.0	28.2	38.2	L65
50	M50	N6	16	71.5	37.0	33.2	44.1	L65
63s	M63	N6 or N7	19	88.0	37.0	39.3	50.1	L80
63	M63	N7	19	88.0	37.0	46.7	56.0	L80
75s	M75	N7 or N8	19	99.0	37.0	52.3	62.0	L90
75	M75	N8	19	99.0	37.0	58.1	68.0	L90
80	M80 x 2	N8 or N9	25	115.2	50.0	62.3	72.0	L104
85	M85 x 2	N8 or N9	25	115.2	50.0	69.1	78.0	L104
90	M90 x 2	N9 or N10	25	125.7	50.0	74.1	84.0	L114
100	M100 x 2	N9 or N10	25	125.7	50.0	82.1	90.0	L114

All Dimensions are in Millimeters

NOTES:

- NPT entry thread reference details on page 53.
- Suitable only for fixed installations. The cable must be clamped near the gland to prevent pulling and twisting.
- Gland Size does not necessarily equate to the entry thread size.
- Integral entry thread seal option is not available for glands with tapered entry threads. IP washers can be supplied if required.
- Please note that dimensions (A) and (B) may differ for glands with non-Metric entry threads. Please refer to our thread data tables for specific dimensions.
- Unless otherwise stated ISO Metric entry threads have a 1.5mm pitch.
- For Flameproof Exd applications the female thread into which the gland is to be fitted must comply with clause 5.3 of EN 50018:2000 (clause 5.3 IEC 79-1) and an engagement of at least 5 full threads must be achieved for parallel threads and should be achieved for tapered threads.
- Where EX-35 type glands are fitted into non-metallic Increased Safety Exe enclosures they must be included within the earth circuit of the system.
- The user should seek expert advice if intending to combine flammable gases and combustible dusts in one environment/installation.
- Full assembly instructions are supplied with glands, the instructions must be read prior to installation and adhered to in full.

EX-40

EX-40 type glands provide two pull resistant seals on the outer sheath of any cable. EX-40 type glands maintain Flameproof Exd and Increased Safety Exe methods of explosion protection and IP66, IP68 to 25 meters. An integral O-Ring entry thread seal, as illustrated, is provided as standard on metric versions.

EXAMPLE PART NUMBER

EX-40 [W] [X] [Y] [YY] [ZZ]

- **W** - Gland material (B = Brass / S = Stainless Steel)
- **X** - Seal Material (1 = Neoprene / 3 = Silicone)
- **Y** - Plating (0 = No Plating / 1 = Nickel / 2 = Tin / 3 = Zinc / 4 = Electroless Nickel)
- **YY** - Gland size (Cable Range)
- **ZZ** - Entry thread

Sample: EX-40-B-1-0-20-M20

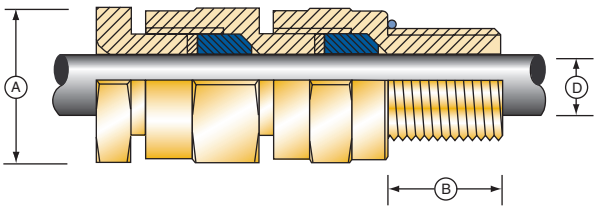

DESIGN STANDARD

EN50014:1998, EN50018:2000, EN50019:2000 and EN 50281-1-1:1998

CERTIFICATION

ATEX II 2 GD, E Exd IIC / E Exe II
CSA Exd IIC/Exe II 4X, Class 1, Zone 1

CERTIFICATE

SIRA 05ATEX1123X - Ex Notified Body No. 0518
Pending

GLAND MARKING

CENELEC and ATEX
Example:
Amphenol 13838 USA EX-40-B-1-0-20-M20 XX SIRA 05ATEX1123X Ex II 2GD IP68 EExdIIC / EExe II (XX = Year Code)

APPLICATION

EExd Equipment
EX-40 type glands will only maintain Flameproof Exd integrity when used with cable that is substantially round and compact with extruded bedding. The cable shall be deemed to be effectively filled. Ref: IEC60079-14:2002 Section 10.4.2

Gas Group	Internal Ignition Source	Enclosure Volume	Which Zone	Use EX-40 Gland
IIC, IIB, IIA	NO	Any	Zone 1 or 2	YES
IIB, IIA	YES	Any	Zone 2	YES
IIB, IIA	YES	2 litres or less	Zone 1	YES

EExe Equipment	Other Equipment
Gas Group II, Zones 1 and 2	Ignitable Dust, Zones 21 and 22

INGRESS PROTECTION

IP66 and IP68 @ 25 meters, Enclosure Type 4X

OPERATING TEMPERATURES

Standard Seals -20°C to +80°C
Silicone Seals - 60°C to +180°C

MATERIALS

Brass CZ121 (EX-40-B)
316 Stainless Steel (EX-40-S)

Outer sheath seal material: Standard (EX-40-W-1) Neoprene, black. Option (EX-40-W-3) Silicone, white
Integral entry thread seal: Nitrile is supplied with neoprene outer seal version. Silicone is supplied with silicone outer seal version.

THREADS	SEALS	PLATING
ISO Metric; NPT; NPS; ISO Pipe Thread (BSP Taper, BSP Parallel)	Extended operating temperature -60°C to +180°C, halogen free versions: Brass (EX-40-B-3); 316 Stainless Steel (EX-40-S-3)	Nickel (1); Tin (2); Zinc (3); Electroless Nickel (4)

ACCESSORIES

Locknut - Brass (EX-BLN); 316 Stainless Steel (EX-SLN)
Earth Tag - Brass (EX-BET), 316 Stainless Steel (EX-SET)
IP Washer - Nylon (EX-NSW); Red Fibre (EX-FSW)
Serrated Lock Washer - 316 Stainless Steel (EX-SSW), Galvanised Steel (EX-GSW)
Shroud - PVC (EX-PVC); PCP (EX-PCP); Low Smoke Zero Halogen (EX-LSH)

Gland Size	Entry Threads		Entry Thread Length [B]	Max Across Corners [A]	Max Protrusion Length	Gland Seal Rance Cable Outer/Lead Sheath		Shroud Size
	Metric	NPT/BSP				Min	Max	
16	M20	N1 or N2	16	28.0	66.0	4.0	8.4	L24
20s	M20	N1 or N2	16	28.0	66.0	7.2	11.7	L24
20	M20	N1 or N2	16	29.7	66.0	9.6	14.0	L27
25	M25	N2 or N3	16	39.6	66.0	13.5	20.0	L36
32	M32	N3 or N4	16	45.1	66.0	19.5	26.3	L41
40	M40	N4 or N5	16	55.9	74.0	23.0	32.2	L51
50s	M50	N5 or N6	16	71.5	74.0	28.2	38.2	L65
50	M50	N6	16	71.5	74.0	33.2	44.1	L65
63s	M63	N6 or N7	19	88.0	74.0	39.3	50.1	L80
63	M63	N7	19	88.0	74.0	46.7	56.0	L80
75s	M75	N7 or N8	19	99.0	74.0	52.3	62.0	L90
75	M75	N8	19	99.0	74.0	58.1	68.0	L90
80	M80 x 2	N8 or N9	25	115.2	100.0	62.3	72.0	L104
85	M85 x 2	N8 or N9	25	115.2	100.0	69.1	78.0	L104
90	M90 x 2	N9 or N10	25	125.7	100.0	74.1	84.0	L114
100	M100 x 2	N9 or N10	25	125.7	100.0	82.1	90.0	L114

All Dimensions are in Millimeters

NOTES:

- NPT entry thread reference details on page 53.
- Suitable only for fixed installations. The cable must be clamped near the gland to prevent pulling and twisting.
- Gland Size does not necessarily equate to the entry thread size.
- Integral entry thread seal option is not available for glands with tapered entry threads. IP washers can be supplied if required.
- Please note that dimensions (A) and (B) may differ for glands with non-Metric entry threads. Please refer to our thread data tables for specific dimensions.
- Unless otherwise stated ISO Metric entry threads have a 1.5mm pitch.
- For Flameproof Exd applications the female thread into which the gland is to be fitted must comply with clause 5.3 of EN 50018:2000 (clause 5.3 IEC 79-1) and an engagement of at least 5 full threads must be achieved for parallel threads and should be achieved for tapered threads.
- Where EX-35 type glands are fitted into non-metallic Increased Safety Exe enclosures they must be included within the earth circuit of the system.
- The user should seek expert advice if intending to combine flammable gases and combustible dusts in one environment/installation.
- Full assembly instructions are supplied with glands, the instructions must be read prior to installation and adhered to in full.

ATEX/CSA Approved Glands with Elastometric Seals

EX-45

EX-45 type glands provide a seal on the outer sheath of unarmoured cable and a conduit connection thread. EX-40-M type glands provide a male thread for connection and EX-40-F type glands provide a female thread for connection. EX-45 type glands maintain Flameproof Exd and Increased Safety Exe methods of explosion protection and IP66, IP68 to 25 metres. An 'O' ring IP entry thread seal is fitted as standard.

EXAMPLE PART NUMBER

EX-45 [A] [W] [X] [Y] [YY] [ZZ]

- **A** - M = Male Connector / F = Female Connector
- **W** - Gland material (B = Brass / S = Stainless Steel)
- **X** - Seal Material (1 = Neoprene / 3 = Silicone)
- **Y** - Plating (0 = No Plating / 1 = Nickel / 2 = Tin / 3 = Zinc / 4 = Electroless Nickel)
- **Z** - Connection Thread
- **YY** - Gland size (Cable Range)
- **ZZ** - Entry thread

Sample: EX-45-F-B-1-0-M20-20-M20

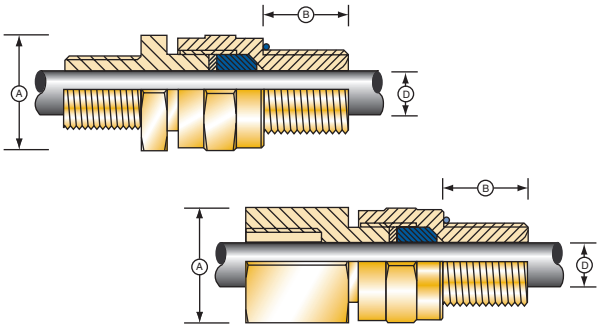

DESIGN STANDARD

EN50014:1998, EN50018:2000, EN50019:2000 and EN 50281-1-1:1998

CERTIFICATION

ATEX II 2 GD, E Exd IIC / E Exe II
CSA Exd IIC/Exe II 4X, Class 1, Zone 1

CERTIFICATE

SIRA 05ATEX1123X - Ex Notified Body No. 0518
Pending

GLAND MARKING

CENELEC and ATEX
Example:
Amphenol 13838 USA EX-45-F-B-1-0-M20-20-M20 XX SIRA 05ATEX1123X Ex II 2GD IP68 EExdIIC / EExe II (XX = Year Code)

APPLICATION

EExd Equipment
EX-45 type glands will only maintain Flameproof Exd integrity when used with cable that is substantially round and compact with extruded bedding. The cable shall be deemed to be effectively filled. Ref: IEC60079-14:2002 Section 10.4.2

Gas Group	Internal Ignition Source	Enclosure Volume	Which Zone	Use EX-45 Gland
IIC, IIB, IIA	NO	Any	Zone 1 or 2	YES
IIB, IIA	YES	Any	Zone 2	YES
IIB, IIA	YES	2 litres or less	Zone 1	YES

EExe Equipment	Other Equipment
Gas Group II, Zones 1 and 2	Ignitable Dust, Zones 21 and 22

INGRESS PROTECTION

IP66 and IP68 @ 25 meters, Enclosure Type 4X

OPERATING TEMPERATURES

Standard Seals -20°C to +80°C
Silicone Seals - 60°C to +180°C

MATERIALS

Brass CZ121 (EX-45-A-B)
316 Stainless Steel (EX-45-A-S)

Outer sheath seal material: Standard (EX-45-A-W-1) Neoprene, black. Option (EX-45-A-W-3) Silicone, white
Integral entry thread seal: Nitrile is supplied with neoprene outer seal version. Silicone is supplied with silicone outer seal version.

THREADS	SEALS	PLATING
ISO Metric; NPT; NPS; ISO Pipe Thread (BSP Taper, BSP Parallel); PG	Extended operating temperature -60°C to +180°C, halogen free versions: Brass (EX-45-A-B-3); 316 Stainless Steel (EX-45-A-S-3)	Nickel (1); Tin (2); Zinc (3); Electroless Nickel (4)

ACCESSORIES

Locknut - Brass (EX-BLN); 316 Stainless Steel (EX-SLN)
Earth Tag - Brass (EX-BET), 316 Stainless Steel (EX-SET)
IP Washer - Nylon (EX-NSW); Red Fibre (EX-FSW)
Serrated Lock Washer - 316 Stainless Steel (EX-SSW), Galvanised Steel (EX-GSW)

Gland Size	Entry Threads		Entry Thread Length [B]	Max Across Corners [A]	Gland Seal Rance Cable Outer Sheath [D]		Conduit Connector	
	Metric	NPT/BSP			Min	Max	NPT	ISO
16	M20	N1 or N2	16	28.0	4.0	8.4	N1 or N2	M20
20s	M20	N1 or N2	16	28.0	7.2	11.7	N1 or N2	M20
20	M20	N1 or N2	16	33.0	9.6	14.0	N1 or N2	M20
25	M25	N2 or N3	16	41.4	13.5	20.0	N2 or N3	M25
32	M32	N3 or N4	16	50.6	19.5	26.3	N3 or N4	M32
40	M40	N4 or N5	16	60.5	23.0	32.2	N4 or N5	M40
50s	M50	N5 or N6	16	71.5	28.2	38.2	N5 or N6	M50
50	M50	N6	16	71.5	33.2	44.1	N6	M50
63s	M63	N6or N7	19	88.0	39.3	50.1	N6or N7	M63
63	M63	N7	19	88.0	46.7	56.0	N7	M63
75s	M75	N7 or N9	19	99.0	52.3	62.0	N7 or N9	M75
75	M75	N9	19	99.0	58.1	68.0	N9	M75

All Dimensions are in Millimeters

NOTES:

- Suitable only for fixed installations. The cable must be clamped near the gland to prevent pulling and twisting.
- Gland Size does not necessarily equate to the entry thread size.
- Integral entry thread seal option is not available for glands with tapered entry threads. IP washers can be supplied if required.
- Please note that dimensions (A) and (B) may differ for glands with non-Metric entry threads. Please refer to our thread data tables for specific dimensions.
- Unless otherwise stated ISO Metric entry threads have a 1.5mm pitch.
- For Flameproof Exd applications the female thread into which the gland is to be fitted must comply with clause 5.3 of EN 50018:2000 (clause 5.3 IEC 79-1) and an engagement of at least 5 full threads must be achieved for parallel threads and should be achieved for tapered threads.
- Where EX-35 type glands are fitted into non-metallic Increased Safety Exe enclosures they must be included within the earth circuit of the system.
- The user should seek expert advice if intending to combine flammable gases and combustible dusts in one environment/installation.
- Full assembly instructions are supplied with glands, the instructions must be read prior to installation and adhered to in full.
- Other conduit connection threads eg PG, BSP are available upon request.

EE-RG

EE-RG type glands provide a seal on the outer sheath of unarmoured cable. EE-RG type glands maintain Increased Safety Exe method of explosion protection and IP66, IP68.

EXAMPLE PART NUMBER

EE-RG[X]-[ZZ]

X - Material (1 = Black Polyamide 6 / 2 = Blue Polyamide 6 / 3 = Grey Polyamide 6)

ZZ - Entry Thread

EE-RG1-M20

DESIGN STANDARD

EN50014:1997 and EN50019:2000

CERTIFICATION

ATEX II 2 GD, E Exe II

CERTIFICATE

SIRA 00ATEX 1072 - Ex Notified Body No. 0518

GLAND MARKING

Example:
SIRA 00ATEX1072X EB (Cable Range) II2GD EExeII
For industrial versions the hazardous area information is omitted

APPLICATION

Exe Equipment
Gas Group II, Zones 1 and 2

INGRESS PROTECTION

IP66 without a sealing washer
IP68 with a sealing washer

OPERATING TEMPERATURES

Sizes M25 and below: -20°C to +60°C
Sizes above M25: -10°C to +60°C

MATERIALS

Standard (EX-RG1) Black Polyamide 6
Option (EE-RG2) Blue Polyamide 6

Industrial, Non Ex Versions: Grey Polyamide 6 (EE-RG3)

Note: Polyamide 6 is self extinguishing, flame retardant and halogen free

Outer Seath seal material: Santoprene, black

THREADS

ISO Metric

ACCESSORIES

Locknut - Nylon (EX-NLN); Brass (EX-BLN)
IP Washer - Nylon (EX-NSW); Red Fibre (EX-FSW)

Gland Size Metric	Entry Thread Length	Max Across Corners	Gland Seal Range Cable Outer Sheath	
			Min	Max
-	9	16.5	3.5	6.0
M16	9	20.9	5.0	8.0
-	9	24.2	6.0	10.0
M20	10	26.4	8.0	13.5
-	10	28.6	10.0	15.0
M25	11	35.2	13.0	19.0
M32	12	45.1	18.0	25.0
M40	14	57.2	24.0	32.0
M50	16	64.9	29.0	38.0
M63	16	71.5	36.0	44.0
All Dimensions are in Millimeters				

NOTES:

- Suitable only for fixed installations. The cable must be clamped near the gland to prevent pulling and twisting
- Gland sizes M25 and above shall not be used for applications where there is a "high" risk of mechanical damage
- Full assembly instructions are supplied with glands, the instructions must be read prior to installation and adhered to in full

ATEX/CSA Approved Glands with Elastometric Seals for Flat Cable

EX-50

EX-50 type glands provide pull resistant seals on the inner and outer sheath and a braid armor clamp. The armor clamp provides an electrical bond between the cable armor and the gland. EX-50 type glands maintain Flameproof Exd and Increased Safety Exe methods of explosion protection and IP66.

EXAMPLE PART NUMBER

EX-50 [W] [Y] [YY] [ZZ]

- **W** - Gland Material (B = Brass / S = Stainless Steel)
- **Y** - Plating (0 = No Plating / 1 = Nickel / 2 = Tin / 3 = Zinc / 4 = Electroless Nickel)
- **YY** - Gland Size (Cable Range)
- **ZZ** - Entry Thread

Sample: EX-50-B-3-20S-M20

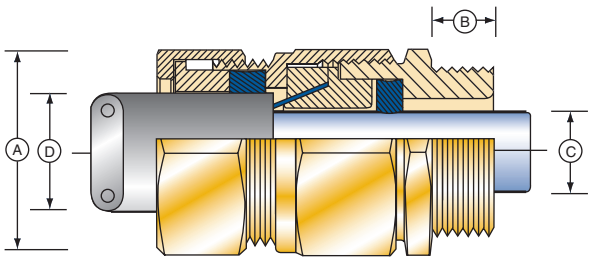

DESIGN STANDARD

EN 50014:1998, EN 50018:2000, EN 50019:2000 and EN 50281-1-1:1998

CERTIFICATION

ATEX II 2 GD, E Exd IIC / E Exe II

CERTIFICATE

SIRA 05ATEX1121X - Ex Notified Body No. 0518

GLAND MARKING

CENELEC and ATEX

Example:

Amphenol 13838 USA EX-50-B-3-20S-M20 XX SIRA 05ATEX1121X Ex II 2GD IP66 EExdIIC / EExe II (XX = Year Code)

APPLICATION

EExd Equipment

EX-50 type glands will only maintain Flameproof Exd integrity when used with cable that has a suitable profile and is compact with extruded bedding. The cable shall be deemed to be effectively filled. Ref: IEC60079-14:2002 Section 10.4.2

Gas Group	Internal Ignition Source	Enclosure Volume	Which Zone	Use EX-50 Gland
IIC, IIB, IIA	NO	2 litres or less	Zone 1 or 2	YES
IIB, IIA	YES	Any	Zone 2	YES
IIB, IIA	YES	2 litres or less	Zone 1	YES

EExe Equipment	Other Equipment
Gas Group II, Zones 1 and 2	Ignitable Dust, Zones 21 and 22

INGRESS PROTECTION

IP66

OPERATING TEMPERATURES

Standard Seals - 60°C to +180°C

MATERIALS

Brass CZ121 (EX-50-B)
316 Stainless Steel (EX-50-S)

THREADS

ISO Metric; NPT; NPS; ISO Pipe Thread (BSP Taper, BSP Parallel)

PLATING

Nickel (1); Tin (2); Zinc (3); Electroless Nickel (4)

ACCESSORIES

Locknut - Brass (EX-BLN); 316 Stainless Steel (EX-SLN)
Earth Tag - Brass (EX-BET), 316 Stainless Steel (EX-SET)
IP Washer - Nylon (EX-NSW); Red Fibre (EX-FSW)
Serrated Lock Washer - 316 Stainless Steel (EX-SSW), Galvanised Steel (EX-GSW)

Gland Size	Entry Threads	Entry Thread Length	Max Across Corners	Max Protrusion Length	Gland Seal Range								Armor Acceptance Range
					Cable Inner Sheath [C]				Cable Outer Sheath [D]				
					Width		Thickness		Width		Thickness		
	Metric	[B]	[A]		Min	Max	Min	Max	Min	Max	Min	Max	[X]
20s	M20	16	26.5	58.0	6.3	11.7	4.0	7.0	7.9	11.7	4.5	7.0	0.1-0.3
20R	M20	16	33.0	58.0	8.1	13.5	5.8	6.2	7.5	16.1	3.0	8.3	0.1-0.45
20	M20	16	33.0	58.0	10.3	13.5	5.6	9.0	11.0	13.5	4.5	9.0	0.1-0.3

All Dimensions are in Millimeters

NOTES:

- Gland Size does not necessarily equate to the entry thread size.
- "X" refers to the wire diameter in a braided cable.
- Please note that dimensions (A) and (B) may differ for glands with non-Metric entry threads. Please refer to our thread data tables for specific dimensions.
- Unless otherwise stated ISO Metric entry threads have a 1.5mm pitch.
- For Flameproof Exd applications the female thread into which the gland is to be fitted must comply with clause 5.3 of EN 50018:2000 (clause 5.3 IEC 79-1) and an engagement of at least 5 full threads must be achieved for parallel threads and should be achieved for tapered threads.
- Where EX-50 type glands are fitted into non-metallic Increased Safety Exe enclosures they must be included within the earth circuit of the system.
- The user should seek expert advice if intending to combine flammable gases and combustible dusts in one environment/installation.
- Full assembly instructions are supplied with glands, the instructions must be read prior to installation and adhered to in full.

ATEX/CSA Approved Glands with Elastometric Seals for Flat Cable

EX-55

EX-55 type glands provide a single pull resistant seal on the outer sheath of unarmoured flat cable. EX-55 type glands maintain Flameproof Exd and Increased Safety Exe methods of explosion protection and IP68 to 25 meters.

EXAMPLE PART NUMBER

EX-55 [W] [Y] [YY] [ZZ]

- **W** - Gland Material(B = Brass / S = Stainless Steel)
- **Y** - Plating (0 = No Plating / 1 = Nickel / 2 = Tin / 3 = Zinc / 4 = Electroless Nickel)
- **YY** - Gland Size (Cable Range)
- **ZZ** - Entry Thread

EX-55-B-3-20S-M20

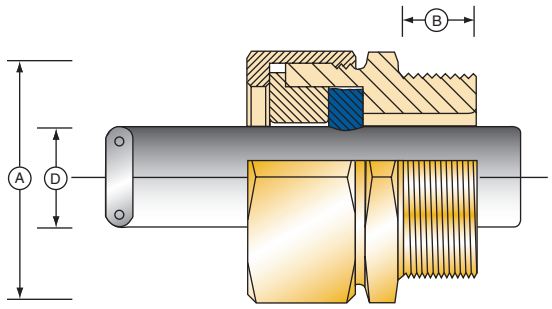

DESIGN STANDARD

EN50014:1998, EN50018:2000, EN50019:2000 and EN50281-1-1:1998

CERTIFICATION

ATEX II 2 GD, E Exd IIC / E Exe II

CERTIFICATE

SIRA 05ATEX1121X - Ex Notified Body No. 0518

GLAND MARKING

CENELEC and ATEX

Example:

Amphenol 13838 USA EX-55-B-3-20S-M20 XX SIRA 05ATEX1121X Ex II 2GD IP68 EExdIIC / EExe II (XX = Year Code)

APPLICATION

EExd Equipment

EX-55 type glands will only maintain Flameproof Exd integrity when used with cable that has a suitable profile and is compact with extruded bedding. The cable shall be deemed to be effectively filled. Ref: IEC60079-14:2002 Section 10.4.2

Gas Group	Internal Ignition Source	Enclosure Volume	Which Zone	Use EX-55 Gland
IIC, IIB, IIA	NO	Any	Zone 1 or 2	YES
IIB, IIA	YES	Any	Zone 2	YES
IIB, IIA	YES	2 litres or less	Zone 1	YES

EExe Equipment	Other Equipment
Gas Group II, Zones 1 and 2	Ignitable Dust, Zones 21 and 22

INGRESS PROTECTION

IP68 @ 25 meters

OPERATING TEMPERATURES

Standard Seal - 60°C to +180°C (Silicone seal)

MATERIALS

Brass CZ121 (EX-55-B)
316 Stainless Steel (EX-55-S)

Outer sheath seal material: Silicone, red or white

THREADS

ISO Metric; NPT; NPS; ISO Pipe Thread (BSP Taper, BSP Parallel)

PLATING

Nickel (1); Tin (2); Zinc (3); Electroless Nickel (4)

ACCESSORIES

Locknut - Brass (EX-BLN); 316 Stainless Steel (EX-SLN)
Earth Tag - Brass (EX-BET), 316 Stainless Steel (EX-SET)
IP Washer - Nylon (EX-NSW); Red Fibre (EX-FSW)
Serrated Lock Washer - 316 Stainless Steel (EX-SSW), Galvanised Steel (EX-GSW)

Gland Size	Entry Threads	Entry Thread Length	Max Across Corners	Gland Seal Range Cable Outer Sheath [D]			
				Width		Thickness	
	Metric	[B]	[A]	Min	Max	Min	Max
20s	M20	16	26.5	6.3	11.7	4.0	7.0
20R	M20	16	33.0	8.1	13.5	5.8	6.2
20	M20	16	33.0	10.3	13.5	5.6	9.0
All Dimensions are in Millimeters							

NOTES:

- Suitable only for fixed installations. The cable must be clamped near the gland to prevent pulling and twisting.
- Gland Size does not necessarily equate to the entry thread size.
- Integral entry thread seal option is not available for glands with tapered entry threads. IP washers can be supplied if required.
- Please note that dimensions (A) and (B) may differ for glands with non-Metric entry threads. Please refer to our thread data tables for specific dimensions.
- Unless otherwise stated ISO Metric entry threads have a 1.5mm pitch.
- For Flameproof Exd applications the female thread into which the gland is to be fitted must comply with clause 5.3 of EN 50018:2000 (clause 5.3 IEC 79-1) and an engagement of at least 5 full threads must be achieved for parallel threads and should be achieved for tapered threads.
- Where EX-55 type glands are fitted into non-metallic Increased Safety Exe enclosures they must be included within the earth circuit of the system.
- The user should seek expert advice if intending to combine flammable gases and combustible dusts in one environment/installation.
- Full assembly instructions are supplied with glands, the instructions must be read prior to installation and adhered to in full.

ATEX / CSA Approved Compound Filled Barrier Glands

EX-60

EX-60 type glands provide a Flameproof EExd compound filled barrier, a seal on the outer sheath, a universal armor clamp for armored, screened or braided cable and an entry thread seal. The armor clamp provides an electrical bond between the cable armor, screen or braid and the gland. EX-60 type glands maintain EExd Flameproof method of explosion protection; IP66, 68 to 100 meters and is deluge resistant.

EXAMPLE PART NUMBER

EX-60 [W] [Y] [R] [YY] [ZZ]

- **W** - Gland Material (B = Brass / S = Stainless Steel)
- **Y** - Plating (0 = No Plating / 1 = Nickel / 2 = Tin / 3 = Zinc / 4 = Electroless Nickel)
- **R** - Reduced bore option
- **YY** - Gland Size (Cable Range)
- **ZZ** - Entry Thread

EX-60-B-1-R-20S-M20

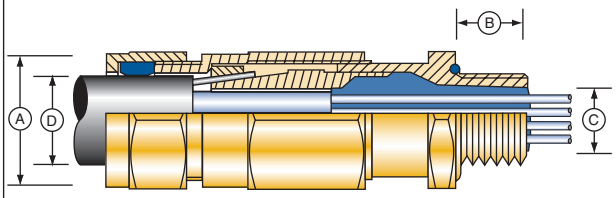

DESIGN STANDARD

EN50014:1998, EN50018:2000, EN50019:2000 and EN50281-1-1:1998
IEC 60079-0 (2000-06), IEC 60079-1 (2001-02)

CERTIFICATION

ATEX II 2 GD, E Exd IIC / E Exe II
CSA Exd I & IIC 4X, Class 1, Zone 1

CERTIFICATE

SIRA 05SIRA1124X - Ex Notified Body No. 0518
Pending

GLAND MARKING

CENELEC and ATEX
Example:
Amphenol 13838 USA EX-60-B-1-R-20S-M20 XX SIRA 05ATEX1124X I M2 II 2GD EExd I & IIC IP68 (XX = Year Code)

APPLICATION

EExd Equipment
EX-60 type Glands will maintain Flameproof Exd integrity when used with any armored or unarmored cable types. Ref: IEC60079-14:2002 Section 10.4.2

Gas Group	Internal Ignition Source	Enclosure Volume	Which Zone	Use EX-60 Gland
I, IIC, IIB, IIA	YES	Any	Zone 1 or 2	YES

Other Equipment
Mining Equipment Group I, M2
Ignitable Dust, Zones 21 and 22

INGRESS PROTECTION

IP66 & IP68 @ 100 Meters
Meets the requirements of DTS01 1991

CURING TIME

@ 21°C
Conductor termination can be effected after 1 hour
The equipment can be energised after 4 hours
The compound chamber can be inspected after 4 hours

OPERATING TEMPERATURES

- 60°C to +85°C

MATERIALS

Brass CZ121 (EX-60-B)
316 Stainless Steel (EX-60-S)

Inner LSOH compound
Standard outer sheath seal is LSOH silicone, white (EX-60-W-Y)
Reduced bore outer sheath seal is LSOH silicone, red (EX-60-W-Y-R)

Entry thread Seal: Red LSOH silicone

THREADS

ISO Metric; NPT; NPS; ISO Pipe Thread (BSP Taper, BSP Parallel)

PLATING

Nickel (1); Tin (2); Zinc (3); Electroless Nickel (4)

ACCESSORIES

Locknut - Brass (EX-BLN); 316 Stainless Steel (EX-SLN)
Earth Tag - Brass (EX-BET), 316 Stainless Steel (EX-SET)
IP Washer - Nylon (EX-NSW); Red Fibre (EX-FSW)
Serrated Lock Washer - 316 Stainless Steel (EX-SSW), Galvanised Steel (EX-GSW)
Shroud - PVC (EX-PVC)

Gland and accessory kits:
K5- includes gland, locknut, earthtag, integral IP “O” ring & PVC shroud

Gland Size	Entry Threads		Entry Thread Length [B]	Max Across Corners [A]	Max Protrusion Length	GlandSeal Range							Armor Acceptance Range	Shroud Size
						Cable Inner Sheath / Cores [C]			Cable Outer Sheath [D]					
									Standard		Reduced (R)			
	Metric	NPT/BSP				Max No. of	Max Over	Max Inner	Min	Max	Min	Max		
16	M20	N1 or N2	16	28.0	72.0	7	9.0	11.7	9.0	13.5	6.7	10.3	0.15 - 1.25	L24
20s	M20	N1 or N2	16	28.0	72.0	8	10.4	11.7	11.5	16.0	9.4	12.5	0.15 - 1.25	L24
20	M20	N1 or N2	16	33.0	73.0	14	12.5	14.0	15.5	21.1	12.0	17.6	0.15 - 1.25	EL30
25	M25	N2 or N3	16	41.4	83.0	25	17.8	20.0	20.3	27.4	16.8	23.9	0.15 - 1.60	EL38
32	M32	N3 or N4	16	50.6	103.0	50	23.5	26.3	26.7	34.0	23.2	30.5	0.15 - 2.00	EL46
40	M40	N4 or N5	16	60.5	105.0	80	28.8	32.2	33.0	40.6	28.6	36.2	0.20 - 2.00	EL55
50s	M50	N6	16	71.5	115.0	100	34.2	38.2	39.4	46.7	34.8	42.4	0.20 - 2.50	EL65
50	M50	N6	16	71.5	115.0	100	39.4	44.1	45.7	53.2	41.1	48.5	0.20 - 2.50	EL65
63s	M63	N7	19	88.0	115.0	120	44.8	50.1	52.1	59.5	47.5	54.8	0.30 - 2.50	EL80
63	M63	N7	19	88.0	115.0	120	50.0	56.0	58.4	65.8	53.8	61.2	0.30 - 2.50	EL80
75s	M75	N8	19	99.0	122.0	140	55.4	62.0	64.8	72.2	60.2	68.0	0.30 - 2.50	EL90
75	M75	N8	19	99.0	122.0	140	60.8	68.0	71.1	78.0	66.5	73.4	0.30 - 2.50	EL90
80	M80x2	N8 or N9	25	115.2	162.0	160	64.4	72.0	77.0	84.0	-	-	0.45 - 3.15	L104
85	M85x2	N8 or N9	25	115.2	162.0	180	69.8	78.0	79.6	90.0	75.0	85.4	0.45 - 3.15	L104
90	M90x2	N9 or N10	25	125.7	166.0	200	75.1	84.0	88.0	96.0	-	-	0.45 - 3.15	L114
100	M100x2	N9 or N10	25	125.7	166.0	220	80.5	90.0	92.0	102.0	87.4	97.4	0.45 - 3.15	L114

All Dimensions are in Millimeters

NOTES:

- NPT entry thread reference details on page 53.
- Gland Size does not necessarily equate to the entry thread size.
- Integral entry thread seal option is not available for glands with tapered entry threads. IP washers can be supplied if required.
- Please note that dimensions (A) and (B) may differ for glands with non-Metric entry threads. Please refer to our thread data tables for specific dimensions.
- Unless otherwise stated ISO Metric entry threads have a 1.5mm pitch.
- For Flameproof Exd applications the female thread into which the gland is to be fitted must comply with clause 5.3 of EN 50018:2000 (clause 5.3 IEC 79-1) and an engagement of at least 5 full threads must be achieved for parallel threads and should be achieved for tapered threads.
- If EX-60 type glands are fitted into non-metallic enclosures they must be included within the earth circuit of the system.
- The user should seek expert advice if intending to combine flammable gases and combustible dusts in one environment/installation.
- Full assembly instructions are supplied with glands, the instructions must be read prior to installation and adhered to in full.

ATEX / CSA Approved Compound Filled Barrier Glands

EX-65

EX-65 type glands provide a Flameproof EExd compound filled barrier and an entry thread seal. EX-65 type glands maintain EExd Flameproof method of explosion protection; IP66, 68 to 100 meters and is deluge resistant.

EXAMPLE PART NUMBER

EX-65 [W] [Y] [YY] [ZZ]

- **W** - Gland Material (B = Brass / S = Stainless Steel)
- **Y** - Plating (0 = No Plating / 1 = Nickel / 2 = Tin / 3 = Zinc / 4 = Electroless Nickel)
- **YY** - Gland Size (Cable Range)
- **ZZ** - Entry Thread

EX-65-B-1-20S-M20

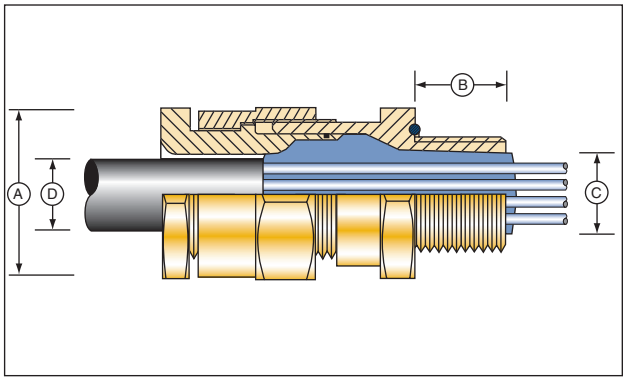

DESIGN STANDARD.

EN50014:1998, EN50018:2000, & EN50281-1-1:1998
IEC 60079-0 (2000-06), IEC 60079-1 (2001-02)

CERTIFICATION

ATEX II 2 GD, E Exd IIC / E Exe II
CSA Exd I & IIC/Exe II 4X, Class 1, Zone 1

CERTIFICATE

SIRA 05ATEX1124X - Ex Notified Body No. 0518
Pending

GLAND MARKING

CENELEC and ATEX
Example:
Amphenol 13838 USA EX-65-B-1-20S-M20 XX SIRA 05ATEX1124X I M2 II 2GD EExd I & IIC IP68 (XX = Year Code)

APPLICATION

EExd Equipment
EX-65 type Glands will maintain Flameproof Exd integrity when used with any armored or unarmored cable types. Ref: IEC60079-14:2002 Section 10.4.2

Gas Group	Internal Ignition Source	Enclosure Volume	Which Zone	Use EX-65 Gland
I, IIC, IIB, IIA	YES	Any	Zone 1 or 2	YES

Other Equipment
Mining Equipment Group I, M2
Ignitable Dust, Zones 21 and 22

INGRESS PROTECTION

IP66 & IP68 @ 100 Meters
Meets the requirements of DTS01 1991

CURING TIME

@ 21°C
Conductor termination can be effected after 1 hour
The equipment can be energised after 4 hours
The compound chamber can be inspected after 4 hours

OPERATING TEMPERATURES

-60°C to +85°C

MATERIALS

Brass CZ121 (EX-65-B)
316 Stainless Steel (EX-65-S)

Inner LSOH compound

Entry thread Seal: Red LSOH silicone

THREADS

ISO Metric; NPT; NPS; ISO Pipe Thread (BSP Taper, BSP Parallel)

PLATING

Nickel (1); Tin (2); Zinc (3); Electroless Nickel (4)

ACCESSORIES

Locknut - Brass (EX-BLN); 316 Stainless Steel (EX-SLN)
Earth Tag - Brass (EX-BET), 316 Stainless Steel (EX-SET)
IP Washer - Nylon (EX-NSW); Red Fibre (EX-FSW)
Serrated Lock Washer - 316 Stainless Steel (EX-SSW), Galvanised Steel (EX-GSW)
Shroud - PVC (EX-PVC)

Gland and accessory kits:
K5- includes gland, locknut, earthtag, integral IP “O” ring & PVC shroud

Gland Size	Entry Threads		Entry Thread Length [B]	Max Across Corners [A]	Max Protrusion Length	Gland Seal Range Cable Sheath / Cores			Shroud Size
	Metric	NPT/BSP				Max No. of Cores	Max Over Cores [C]	Max Sheath Diameter [D]	
20s	M20	N1 or N2	16	28.0	42.0	8	10.4	11.7	L24
20	M20	N1 or N2	16	33.0	44.0	14	12.5	14.0	L20
25	M25	N2 or N3	16	41.4	48.0	25	17.8	20.0	L38
32	M32	N3 or N4	16	50.6	53.0	50	23.5	26.3	L46
40	M40	N4 or N5	16	60.5	54.0	80	28.8	32.2	L55
50	M50	N6	16	71.5	54.0	100	39.4	44.1	L65
63	M63	N7	19	88.0	55.0	120	50.0	56.0	L80
75	M75	N8	19	99.0	60.0	140	60.8	68.0	L90
80	M80x2	N8 or N9	25	115.2	80.0	160	64.4	72.0	L104
85	M85x2	N8 or N9	25	115.2	80.0	180	69.8	78.0	L104
90	M90x2	N9 or N10	25	125.7	85.0	200	75.1	84.0	L114
100	M100x2	N9 or N10	25	125.7	85.0	220	80.5	90.0	L114

All Dimensions are in Millimeters

NOTES:

- NPT entry thread reference details on page 53.
- Gland Size does not necessarily equate to the entry thread size.
- Integral entry thread seal option is not available for glands with tapered entry threads. IP washers can be supplied if required.
- Please note that dimensions (A) and (B) may differ for glands with non-Metric entry threads. Please refer to our thread data tables for specific dimensions.
- Unless otherwise stated ISO Metric entry threads have a 1.5mm pitch.
- For Flameproof Exd applications the female thread into which the gland is to be fitted must comply with clause 5.3 of EN 50018:2000 (clause 5.3 IEC 79-1) and an engagement of at least 5 full threads must be achieved for parallel threads and should be achieved for tapered threads.
- If EX-65 type glands are fitted into non-metallic enclosures they must be included within the earth circuit of the system.
- The user should seek expert advice if intending to combine flammable gases and combustible dusts in one environment/installation.
- Full assembly instructions are supplied with glands, the instructions must be read prior to installation and adhered to in full.

ATEX / CSA Approved Compound Filled Barrier Glands

EX-70

EX-70 type glands provide a Flameproof EExd compound filled barrier, a secondary weather seal on the outer sheath and an entry thread seal. EX-70 type glands maintain EExd Flameproof method of explosion protection; IP66, 68 to 100 meters and is deluge resistant.

EXAMPLE PART NUMBER

EX-70 [W] [Y] [YY] [ZZ]

- **W** - Gland Material (B = Brass / S = Stainless Steel)
- **Y** - Plating (0 = No Plating / 1 = Nickel / 2 = Tin / 3 = Zinc / 4 = Electroless Nickel)
- **YY** - Gland Size (Cable Range)
- **ZZ** - Entry Thread

EX-70-B-1-20S-M20

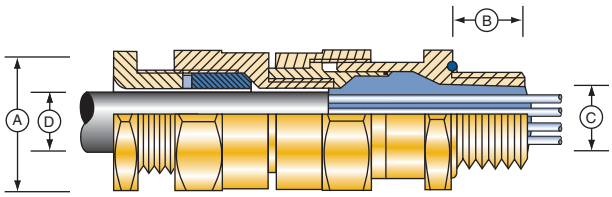

DESIGN STANDARD

EN50014:1998, EN50018:2000, & EN50281-1-1:1998
IEC 60079-0 (2000-06), IEC 60079-1 (2001-02)

CERTIFICATION

ATEX II 2 GD, E Exd IIC / E Exe II
CSA Exd I & IIC/Exe II 4X, Class 1, Zone 1

CERTIFICATE

SIRA 05ATEX1124X - Ex Notified Body No. 0518

GLAND MARKING

CENELEC and ATEX
Example:
Amphenol 13838 USA EX-70-1-20S-M20 XX SIRA 05ATEX1124X I M2 II 2GD EExd I & IIC IP68

APPLICATION

EExd Equipment
EX-70 type Glands will maintain Flameproof Exd integrity when used with any armored or unarmored cable types. Ref: IEC60079-14:2002 Section 10.4.2

Gas Group	Internal Ignition Source	Enclosure Volume	Which Zone	Use EX-70 Gland
I, IIC, IIB, IIA	YES	Any	Zone 1 or 2	YES

Other Equipment
Mining Equipment Group I, M2
Ignitable Dust, Zones 21 and 22

INGRESS PROTECTION

IP66 & IP68 @ 100 Meters
Meets the requirements of DTS01 1991

CURING TIME

@ 21°C
Conductor termination can be effected after 1 hour
The equipment can be energised after 4 hours
The compound chamber can be inspected after 4 hours

OPERATING TEMPERATURES

-60°C to +85°C

MATERIALS

Brass CZ121 (Ex-70-B)
316 Stainless Steel (EX-70-S)

Inner LSOH compound

Entry thread Seal: Red LSOH silicone

THREADS

ISO Metric; NPT; NPS; ISO Pipe Thread (BSP Taper, BSP Parallel)

PLATING

Nickel (1); Tin (2); Zinc (3); Electroless Nickel (4)

ACCESSORIES

Locknut - Brass (EX-BLN); 316 Stainless Steel (EX-SLN)
Earth Tag - Brass (EX-BET), 316 Stainless Steel (EX-SET)
IP Washer - Nylon (EX-NSW); Red Fibre (EX-FSW)
Serrated Lock Washer - 316 Stainless Steel (EX-SSW), Galvanised Steel (EX-GSW)
Shroud - PVC (EX-PVC)

Gland and accessory kits:
K5- includes gland, locknut, integral IP “O” ring & PVC shroud

Gland Size	Entry Threads		Entry Thread Length [B]	Max Across Corners [A]	Max Protrusion Length	Gland Seal Range					Shroud Size
						Cable Inner Sheath / Cores [C]			Cable Outer Sheath [D]		
	Metric	NPT/BSP				Max No. of Cores	Max Over Cores	Max Sheath Diameter	Min	Max	
16	M20	N1 or N2	16	28.0	73.0	7	8.4	8.4	3.4	8.4	L24
20s	M20	N1 or N2	16	28.0	73.0	8	10.4	11.7	4.8	11.7	L24
20	M20	N1 or N2	16	33.0	73.0	14	12.5	14.0	9.5	14.0	EL30
25	M25	N2 or N3	16	41.4	74.0	25	17.8	20.0	11.7	20.0	EL38
32	M32	N3 or N4	16	50.6	80.0	50	23.5	26.3	18.1	26.3	EL46
40	M40	N4 or N5	16	60.5	87.0	80	28.8	32.2	22.6	32.2	EL55
50s	M50	N6	16	71.5	87.0	100	34.2	38.2	28.2	38.2	EL65
50	M50	N6	16	71.5	87.0	100	39.4	44.1	33.1	44.1	EL65
63s	M63	N7	19	88.0	88.0	120	44.8	50.1	39.3	50.1	EL80
63	M63	N7	19	88.0	88.0	120	50.0	56.0	46.7	56.0	EL80
75s	M75	N8	19	99.0	97.0	140	55.4	62.0	52.3	62.0	EL90
75	M75	N8	19	99.0	97.0	140	60.8	68.0	58.0	68.0	EL90
80	M80x2	N8 or N9	25	115.2	123.0	160	64.4	72.0	61.9	72.0	L104
85	M85x2	N8 or N9	25	115.2	123.0	180	69.8	78.0	69.1	78.0	L104
90	M90x2	N9 or N10	25	125.7	123.0	200	75.1	84.0	74.1	84.0	L114
100	M100x2	N9 or N10	25	125.7	123.0	220	80.5	90.0	81.8	90.0	L114

All Dimensions are in Millimeters

NOTES:

- NPT entry thread reference details on page 53.
- Gland Size does not necessarily equate to the entry thread size.
- Integral entry thread seal option is not available for glands with tapered entry threads. IP washers can be supplied if required.
- Please note that dimensions (A) and (B) may differ for glands with non-Metric entry threads. Please refer to our thread data tables for specific dimensions.
- Unless otherwise stated ISO Metric entry threads have a 1.5mm pitch.
- For Flameproof Exd applications the female thread into which the gland is to be fitted must comply with clause 5.3 of EN 50018:2000 (clause 5.3 IEC 79-1) and an engagement of at least 5 full threads must be achieved for parallel threads and should be achieved for tapered threads.
- If EX-70 type glands are fitted into non-metallic enclosures they must be included within the earth circuit of the system.
- The user should seek expert advice if intending to combine flammable gases and combustible dusts in one environment/installation.
- Full assembly instructions are supplied with glands, the instructions must be read prior to installation and adhered to in full.

ATEX / CSA Approved Compound Filled Barrier Glands

EX-75

EX-75 type glands provide a Flameproof EExd compound filled barrier seal on the cables individual conductors within a conduit. It also provides an entry thread seal. EX-75 type glands maintain EExd Flameproof method of explosion protection; IP66, 68 to 100 meters and is deluge resistant.

EXAMPLE PART NUMBER

EX-75 [W] [Y] [YY] [ZZ1] [ZZ2]

- **W** - Gland Material (B = Brass / S = Stainless Steel)
- **Y** - Plating (0 = No Plating / 1 = Nickel / 2 = Tin / 3 = Zinc / 4 = Electroless Nickel)
- **YY** - Gland Size (Cable Range)
- **ZZ1** - Male Thread
- **ZZ2** - Female Entry Thread

EX-75-B-1-20S-M20

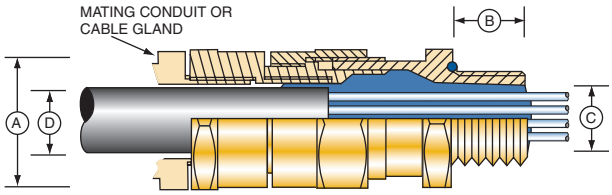

DESIGN STANDARD

EN50014:1998, EN50018:2000, & EN50281-1-1:1998
IEC 60079-0 (2000-06), IEC 60079-1 (2001-02)

CERTIFICATION

ATEX II 2 GD, E Exd IIC / E Exe II
CSA Exd I & IIC/Exe II 4X, Class 1, Zone 1

CERTIFICATE

SIRA 03ATEX1479X - Ex Notified Body No. 0518

GLAND MARKING

CENELEC and ATEX
Example:
Amphenol 13838 USA EX-75-B-1-20S-M20 XX SIRA05ATEX1120X Ex I M2 II 2GD EExd I & IIC IP68

APPLICATION

EExd Equipment
EX-75 type Glands will maintain Flameproof Exd integrity when used with any armored or unarmored cable types. Ref: IEC60079-14:2002 Section 10.4.2

Gas Group	Internal Ignition Source	Enclosure Volume	Which Zone	Use EX-75 Gland
I, IIC, IIB, IIA	YES	Any	Zone 1 or 2	YES

Other Equipment
Mining Equipment Group I, M2
Ignitable Dust, Zones 21 and 22

INGRESS PROTECTION

IP66 & IP68 @ 100 Meters
Meets the requirements of DTS01 1991

CURING TIME

@ 21°C
Conductor termination can be effected after 1 hour
The equipment can be energised after 4 hours
The compound chamger can be inspected after 4 hours

OPERATING TEMPERATURES

-60°C to +85°C

MATERIALS

Brass CZ121 (EX-75-B)
316 Stainless Steel (EX-75-S)

Inner LSOH compound

Entry thread Seal: Red LSOH silicone

THREADS

ISO Metric; NPT; NPS; ISO Pipe Thread (BSP Taper, BSP Parallel)

PLATING

Nickel (1); Tin (2); Zinc (3); Electroless Nickel (4)

ACCESSORIES

Locknut - Brass (EX-BLN); 316 Stainless Steel (EX-SLN)
Earth Tag - Brass (EX-BET), 316 Stainless Steel (EX-SET)
IP Washer - Nylon (EX-NSW); Red Fibre (EX-FSW)
Serrated Lock Washer - 316 Stainless Steel (EX-SSW), Galvanised Steel (EX-GSW)

Fitting Size Ref	Male Entry		Female Entry		Entry Thread Length	Max Across Corners	Max Protrusion Length	Sealing Range Cable Conductors / Cores		
	Metric	NPT	Metric	NPT	[B]	[A]		Max No. of Cores	Max Over Cores [C]	Max Cable Inside Fitting [D]
20	M20	N1 or N2	M20	N1 or N2	16	33.0	57.0	14	12.5	14.0
25	M25	N2 or N3	M25	N2 or N3	16	41.4	63.0	25	17.8	20.0
32	M32	N3 or N4	M32	N3 or N4	16	50.6	67.0	50	23.5	26.3
40	M40	N4 or N5	M40	N4 or N5	16	60.5	68.0	80	28.8	32.2
50	M50	N6	M50	N6	16	71.5	68.0	100	39.4	44.1
63	M63	N7	M63	N7	19	88.0	72.0	120	50.0	56.0
75	M75	N8	M75	N8	19	99.0	78.0	140	60.8	68.0
80	M80x2	N8 or N9	M80x2	N8 or N9	25	115.2	103.0	160	64.4	72.0
85	M85x2	N8 or N9	M85x2	N8 or N9	25	115.2	103.0	180	69.8	78.0
90	M90x2	N9 or N10	M90x2	N9 or N10	25	125.7	104.0	200	75.1	84.0
100	M100x2	N9 or N10	M100x2	N9 or N10	25	125.7	104.0	220	80.5	90.0

All Dimensions are in Millimeters

NOTES:

- NPT thread reference details on page 53.
- Please note that dimensions (A) and (B) may differ for glands with non-Metric entry threads. Please refer to our thread data tables for specific dimensions.
- Integral entry thread seal option is not available for glands with tapered entry threads. IP washers can be supplied if required.
- Unless otherwise stated ISO Metric entry threads have a 1.5mm pitch.
- For Flameproof Exd applications the female thread into which the gland is to be fitted must comply with clause 5.3 of EN 50018:2000 (clause 5.3 IEC 79-1) and an engagement of at least 5 full threads must be achieved for parallel threads and should be achieved for tapered threads.
- If EX-75 type glands are fitted into non-metallic enclosures they must be included within the earth circuit of the system.
- The user should seek expert advice if intending to combine flammable gases and combustible dusts in one environment/installation.
- To maintain ingress protection a thread sealant should be applied to the conduit thread.
- Full assembly instructions are supplied with glands, the instructions must be read prior to installation and adhered to in full.

CGA

CGA type glands provide an integral armor clamp for armored cable. The integral armor clamp provides an electrical bond between the cable armor and the gland. CGA type glands maintain IP30.

EXAMPLE PART NUMBER

CG[X] [W] [Y] [YY] [ZZ]

- **X** - Clamp Type (See Clamps)
- **W** - Gland Material (B = Brass / S = Stainless Steel)
- **Y** - Plating (0 = No Plating / 1 = Nickel / 2 = Tin / 3 = Zinc / 4 = Electroless Nickel)
- **YY** - Gland Size (Cable Range)
- **ZZ** - Entry Thread

Sample: CGA-B-3-20S-M20

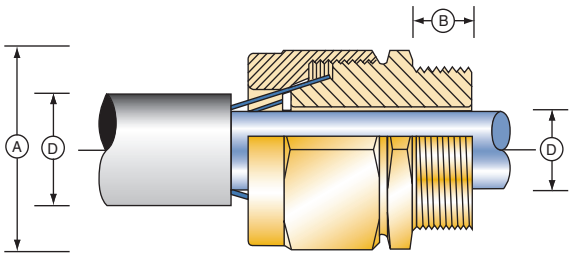

DESIGN STANDARD

BS 6121:1989

GLAND MARKING

Example:
BS6121 Part 1 CGA-B-3-20S-M20 Amphenol

INGRESS PROTECTION

IP30

OPERATING TEMPERATURES

-100°C to +600°C

MATERIALS

Brass CZ121 (CGA-B)

VARIATIONS

All variants of the CGA type gland feature a separate armor clamping ring to allow for inspection of the clamped armor:
Brass (CGA-B)

THREADS

ISO Metric only

CLAMPS

SWA Clamping using gland body (CGA)
SWA steel wire armor - clamping ring (CGL)
SWB woven steel wire armor or STA steel tape armor - clamping ring (CGZ)

PLATING

Nickel (1); Tin (2); Zinc (3); Electroless Nickel (4)

ACCESSORIES

Locknut - Brass (EX-BLN); Steel (EX-MLN)
Earth Tag - Brass (EX-BET)
Shroud - PVC (EX-PVC)

Gland and accessory kits:
K6- includes gland, steel locknut, earthtag and PVC shroud

Gland Size	Entry Threads	Entry Threads Length	M<ax Across Corners	Max Protrusion Length	Gland Seal Range				Armor Acceptance Range		Shroud Size
					Cable Inner Sheath [C]		Cable Outer Sheath [D]				
	Metric	[B]	[A]		Min	Max	Min	Max	W	XZ Clamp Ring Version Only	
20s	M20	10	24.2	20.0	-	11.7	-	16.0	0.90-1.25	0.15-0.35	S22
20	M20	10	29.7	20.0	-	14.0	-	21.0	0.90-1.25	0.15-0.50	S27
25	M25	10	45.1	22.0	-	20.0	-	27.4	1.25-1.60	0.15-0.50	S36
32	M32	10	50.6	25.0	-	26.3	-	34.0	1.60-2.00	0.15-0.55	S41
40	M40	15	60.5	30.0	-	32.2	-	40.6	1.60-2.00	0.20-0.60	L55
50	M50	15	71.5	32.0	-	44.1	-	53.2	2.00-2.50	0.20-0.60	L65
63	M63	15	88.0	42.0	-	56.0	-	65.8	2.50	0.30-0.80	L80
75	M75	15	99.0	50.0	-	68.0	-	78.0	2.50	0.30-1.00	L90
80	M80	20	115.2	50.0	-	72.0	-	84.0	3.15	0.45-1.00	S104
85	M85	20	115.2	50.0	-	78.0	-	90.0	3.15	0.45-1.00	S104
90	M90	20	125.7	50.0	-	84.0	-	96.0	3.15	0.45-1.00	S114
100	M100	20	125.7	50.0	-	90.0	-	102.0	3.15	0.45-1.00	S114
All Dimensions are in Millimeters											

NOTES:

- Gland Size does not necessarily equate to the entry thread size
- "W" refers to the wire diameter in a steel wire armored cable
- Unless otherwise stated ISO Metric entry threads have a 1.5mm pitch
- Shroud sizes above are for CGA type only.
- Full assembly instructions are available upon request, the instructions should be read prior to installation and adhered to in full

CGSB or CGSS

CGSB and CGSS type glands provide a seal on the outer sheath and an armor specific clamp for armored cable. The armor clamp provides an electrical bond between the cable armor and the gland; and maintain IP66 rating.

EXAMPLE PART NUMBER

CGSB* [W] [Y] [R] [YY] [ZZ]

- ***** - Armor Type (W = SWA / X = SWB / Z = STA)
- **W** - Seal Material (1 = Neoprene / 3 = Silicone)
- **Y** - Plating (0 = No Plating / 1 = Nickel / 2 = Tin / 3 = Zinc / 4 = Electroless Nickel)
- **R** - Reduced bore option
- **YY** - Gland Size (Cable Range)
- **ZZ** - Entry Thread

Sample: CGSB-W-1-3-R-20S-M20

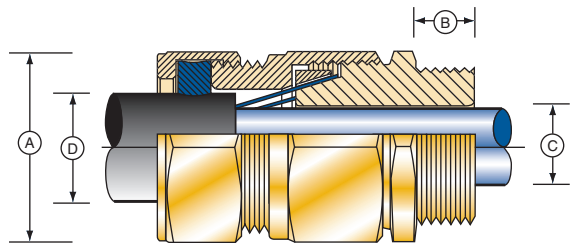

DESIGN STANDARD

BS EN 50262: 1999

GLAND MARKING

Example:
CGSB-W-1-3-R-20S-M20 Amphenol

INGRESS PROTECTION

IP66

OPERATING TEMPERATURES

Standard Seals -20°C to +80°C
Silicone Seals - 60°C to +200°C

MATERIALS

Brass CZ121 (CGSB)
316 Stainless Steel (CGSS)

Outer sheath seal material: Standard Neoprene, black. Option Silicone, white
Reduced bore outer sheath seal (R) Silicone, red

THREADS

ISO Metric; NPT; NPS; ISO Pipe Thread (BSP Taper, BSP Parallel);

SEALS

Extended operating temperature -60°C to +200°C, halogen free versions:
Brass (CGSB-*-3); 316 Stainless Steel (CGSS-*-3)

CLAMPS

SWA steel wire armor (CGSB-W)
SWB woven steel wire armor or STA steel tape armor (CGSB-X)
SWA, SWB and STA armor clamps (CGSB-Z)

PLATING

Nickel (1); Tin (2); Zinc (3); Electroless Nickel (4)

ACCESSORIES

Locknut - Brass (EX-BLN); 316 Stainless Steel (EX-SLN)
Earth Tag - Brass (EX-BET), 316 Stainless Steel (EX-SET)
IP Washer - Nylon (EX-NSW); Red Fibre (EX-FSW)
Serrated Lock Washer - 316 Stainless Steel (EX-SSW), Galvanised Steel (EX-GSW)
Shroud - PVC (EX-PVC); PCP (EX-SPCP); Low Smoke Zero Halogen (EX-LSH)

Gland and accessory kits:
K7- includes gland, locknut, earthtag and PVC shroud
K8 - includes brass gland, brass locknut, brass earthtag and zero halogen shroud

Gland Size	Entry Threads		Entry Thread Length [B]	Max Across Corners [A]	Max Protrusion Length	Gland Seal Range						Armour Acceptance Range		Shroud Size
						Cable Inner Sheath [C]		Cable Outer Sheath [D]						
								Standard		Reduced (R)				
	Metric	NPT/BSP				Min	Max	Min	Max	Min	Max	W	XZ	
16	M20	N1 or N2	10	26.5	54.0	-	11.7	9.0	13.5	6.7	10.3	0.90	0.15-0.35	L24
20s	M20	N1 or N2	10	26.5	54.0	-	11.7	11.5	16.0	9.4	12.5	0.90-1.25	0.15-0.35	L24
20	M20	N1 or N2	10	33.0	54.0	-	14.0	15.5	21.0	12.0	17.6	0.90-1.25	0.15-0.50	L30
25	M25	N2 or N3	10	41.4	54.0	-	20.0	20.3	27.4	16.8	23.9	1.25-1.60	0.15-0.50	L38
32	M32	N3 or N4	10	50.6	60.0	-	26.3	26.7	34.0	23.2	30.5	1.60-2.00	0.15-0.55	L46
40	M40	N4 or N5	15	60.5	67.0	-	32.2	33.0	40.6	28.6	36.2	1.60-2.00	0.20-0.60	L55
50s	M50	N5 or N6	15	71.5	67.0	-	38.2	39.4	46.7	34.8	42.4	2.00-2.50	0.20-0.60	L65
50	M50	N6	15	71.5	67.0	-	44.1	45.7	53.2	41.1	48.5	2.00-2.50	0.30-0.60	L65
63s	M63	N6 or N7	15	88.0	69.0	-	50.1	52.1	59.4	47.5	54.8	2.50	0.30-0.80	L80
63	M63	N7	15	88.0	69.0	-	56.0	58.4	65.8	53.8	61.2	2.50	0.30-0.80	L80
75s	M75	N7 or N8	15	99.0	77.0	-	62.0	64.8	72.2	60.2	68.0	2.50	0.30-1.00	L90
75	M75	N8	15	99.0	77.0	-	68.0	71.1	78.0	66.5	73.4	2.50	0.30-1.00	L90
80	M80 x 2	N8 or N9	20	115.2	104.0	-	72.0	77.0	84.0	-	-	3.15	0.45-1.00	L104
80H	M80 x 2	N8 or N9	20	115.2	104.0	-	72.0	79.6	90.0	-	-	3.15	0.45-1.00	L104
85	M85 x 2	N8 or N9	20	115.2	104.0	-	78.0	79.6	90.0	75.0	85.4	3.15	0.45-1.00	L104
90	M90 x 2	N9 or N10	20	125.7	104.0	-	84.0	88.0	96.0	-	-	3.15	0.45-1.00	L114
90H	M90 x 2	N9 or N10	20	125.7	104.0	-	84.0	92.0	102.0	-	-	3.15	0.45-1.00	L114
100	M100 x 2	N9 or N10	20	125.7	104.0	-	90.0	92.0	102.0	87.4	97.4	3.15	0.45-1.00	L114

All Dimensions are in Millimeters

NOTES:

- NPT entry thread reference details on page 53.
- Gland Size does not necessarily equate to the entry thread size.
- "W" refers to the wire diameter in a steel wire armored cable.
- "XZ" refers to the wire diameter in a woven steel wire armored cable or the tape thickness in a steel tape armored cable.
- Please note that dimensions (A) and (B) may differ for glands with non-Metric entry threads. Please refer to our thread data tables for specific dimensions.
- Unless otherwise stated ISO Metric entry threads have a 1.5mm pitch.
- Full assembly instructions are available upon request, the instructions should be read prior to installation and adhered to in full.

Non Hazardous Industrial Glands

CGDS

CDGS type glands provide a seal on the inner sheath, a seal on the outer sheath and an armor specific armor clamp for armored cable. The armor clamp provides an electrical bond between the cable armor and the gland. CGDS type glands maintain IP66, IP67.

EXAMPLE PART NUMBER

CGDS* [W] [Y] [R] [YY] [ZZ]

- ***** - Armor Type (W = SWA / X = SWB / Z = STA)
- **W** - Gland Material (B = Brass / S = Stainless Steel)
- **X** - Seal Type (0 = None / 1 = Neoprene / 3 = Silicone)
- **Y** - Plating (0 = No Plating / 1 = Nickel / 2 = Tin / 3 = Zinc / 4 = Electroless Nickel)
- **R** - Reduced bore option
- **YY** - Gland Size (Cable Range)
- **ZZ** - Entry Thread

Sample: CGDS-W-B-0-3-R-20S-M20-K1

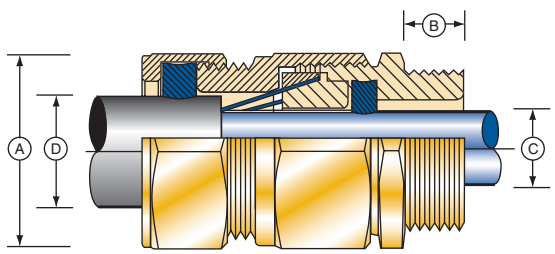

DESIGN STANDARD

BS EN 50262: 1999

GLAND MARKING

Example:
CDGS-W-B-0-3-R-20S-M20 Amphenol

INGRESS PROTECTION

IP66 and IP67

OPERATING TEMPERATURES

Standard Seals -20°C to +80°C
Silicone Seals - 60°C to +200°C

MATERIALS

Brass CZ121 (CGDS-*-B)
316 Stainless Steel (CGDS-*-S)

Inner and outer sheath seal material: Standard Neoprene, black. Option Silicone, white
Reduced bore outer sheath seal (R) Silicone, red

VARIATIONS

Omission of outer seal:
Brass (CDGS-*-B-0); 316 Stainless Steel (CDGS-*-S-0)

THREADS

ISO Metric; NPT; NPS; ISO Pipe Thread (BSP Taper, BSP Parallel)

SEALS

Extended operating temperature -60°C to +200°C, halogen free versions:
Brass (CDGS-*-B-3); 316 Stainless Steel (CDGS-*-S-3)

CLAMPS

SWA steel wire armor (CGDS-W)
SWB woven steel wire armor (CGDS-X)
STA steel tape armor (CGDS-Z)

PLATING

Nickel (1); Tin (2); Zinc (3); Electroless Nickel (4)

ACCESSORIES

Locknut - Brass (EX-BLN); 316 Stainless Steel (EX-SLN)
Earth Tag - Brass (EX-BET), 316 Stainless Steel (EX-SET)
IP Washer - Nylon (EX-NSW); Red Fibre (EX-FSW)
Serrated Lock Washer - 316 Stainless Steel (EX-SSW), Galvanised Steel (EX-GSW)
Shroud - PVC (EX-PVC); PCP (EX-PCP); Low Smoke Zero Halogen (EX-LSH)

Gland and accessory kits:
K1 - includes gland, locknut, earthtag and PVC shroud
K8 - includes brass gland, brass locknut, brass earthtag and zero halogen shroud

Gland Size	Entry Threads		Entry Thread Length [B]	Max Across Corners [A]	Max Protrusion Length	Gland Seal Range						Armour Acceptance Range		Shroud Size
						Cable Inner Sheath [C]		Cable Outer Sheath [D]						
								Standard		Reduced (R)				
	Metric	NPT/BSP				Min	Max	Min	Max	Min	Max	W	XZ	
16	M20	N1 or N2	16	26.5	58.0	4.0	8.4	8.4	13.5	4.9	10.0	0.90	0.15-0.35	L24
20s	M20	N1 or N2	16	26.5	58.0	8.0	11.7	11.5	16.0	9.4	12.5	0.90-1.25	0.15-0.35	L24
20	M20	N1 or N2	16	33.0	58.0	6.7 *	14.0	15.5	21.0	12.0	17.6	0.90-1.25	0.15-0.50	L30
25	M25	N2 or N3	16	41.4	58.0	13.0	20.0	20.3	27.4	16.8	23.9	1.25-1.60	0.15-0.50	L38
32	M32	N3 or N4	16	50.6	65.0	19.0	26.3	26.7	34.0	23.2	30.5	1.60-2.00	0.15-0.55	L46
40	M40	N4 or N5	16	60.5	72.0	25.0	32.2	33.0	40.6	28.6	36.2	1.60-2.00	0.20-0.60	L55
50s	M50	N5 or N6	16	71.5	73.0	31.5	38.2	39.4	46.7	34.8	42.4	2.00-2.50	0.20-0.60	L65
50	M50	N6	16	71.5	73.0	36.5	44.1	45.7	53.2	41.1	48.5	2.00-2.50	0.30-0.80	L65
63s	M63	N6 or N7	19	88.0	76.0	42.5	50.1	52.1	59.4	47.5	54.8	2.50	0.30-0.80	L80
63	M63	N7	19	88.0	76.0	49.5	56.0	58.4	65.8	53.8	61.2	2.50	0.30-0.80	L80
75s	M75	N7 or N8	19	99.0	82.0	54.5	62.0	64.8	72.2	60.2	68.0	2.50	0.30-1.00	L90
75	M75	N8	19	99.0	82.0	60.5	68.0	71.1	78.0	66.5	73.4	2.50	0.30-1.00	L90
80	M80 x 2	N8 or N9	25	115.2	110.0	62.2	72.0	77.0	84.0	-	-	3.15	0.45-1.00	L104
80H	M80 x 2	N8 or N9	25	115.2	110.0	62.2	72.0	79.6	90.0	-	-	3.15	0.45-1.00	L104
85	M85 x 2	N8 or N9	25	115.2	110.0	69.0	78.0	79.6	90.0	75.0	85.4	3.15	0.45-1.00	L104
90	M90 x 2	N9 or N10	25	125.7	110.0	74.0	84.0	88.0	96.0	-	-	3.15	0.45-1.00	L114
90H	M90 x 2	N9 or N10	25	125.7	110.0	74.0	84.0	92.0	102.0	-	-	3.15	0.45-1.00	L114
100	M100 x 2	N9 or N10	25	125.7	110.0	82.0	90.0	92.0	102.0	87.4	97.4	3.15	0.45-1.00	L114

All Dimensions are in Millimeters

NOTES:

*** CGDS gland size 20, the silicone inner seal only seals to a minimum of 11.0mm and NOT 6.7mm.**

- NPT entry thread reference on page 53.
- Gland Size does not necessarily equate to the entry thread size.
- "W" refers to the wire diameter in a steel wire armored cable.
- "XZ" refers to the wire diameter in a woven steel wire armored cable or the tape thickness in a steel tape armored cable.
- Please note that dimensions (A) and (B) may differ for glands with non-Metric entry threads. Please refer to our thread data tables for specific dimensions.
- Unless otherwise stated ISO Metric entry threads have a 1.5mm pitch.
- Full assembly instructions are available upon requests, the instructions should be read prior to installation and adhered to in full.

Non Hazardous Industrial Glands

CGU

CGU type glands provide a single pull resistant seal on the outer sheath of unarmoured cable. CGU type glands maintain IP66, IP68 to 25 meters.

EXAMPLE PART NUMBER

CGU [W] [Y] [YY] [ZZ]

- **W** - Gland Material (B = Brass / S = Stainless Steel)
- **X** - Seal (1 = Neoprene / 3 = Silicone)
- **Y** - Plating (0 = No Plating / 1 = Nickel / 2 = Tin / 3 = Zinc / 4 = Electroless Nickel)
- **YY** - Gland Size (Cable Range)
- **ZZ** - Entry Thread

Sample: CGU-B-1-3-20S-M20

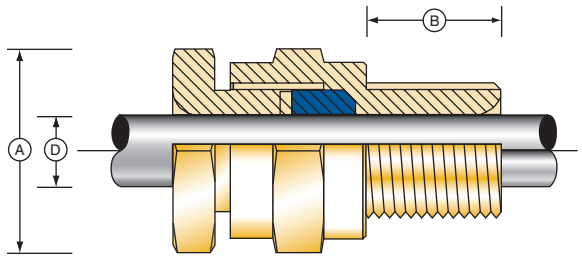

DESIGN STANDARD

BS EN 50262: 1999

GLAND MARKING

Example:
CGU-B-1-3-20S-M20

INGRESS PROTECTION

IP66 and IP68 @ 25 metres

OPERATING TEMPERATURES

Standard Seals -20°C to +80°C
Silicone Seals - 60°C to +200°C

MATERIALS

Brass CZ121 (CGU-B)
316 Stainless Steel (CGU-S)

Outer sheath seal material:
Standard Neoprene, black. Option Silicone, white

THREADS

ISO Metric; NPT; NPS; ISO Pipe Thread (BSP Taper, BSP Parallel);

SEALS

Extended operating temperature -60°C to +200°C, halogen free versions:
Brass (CGU-B-3); 316 Stainless Steel (CGU-B-3);

PLATING

Nickel (1); Tin (2); Zinc (3); Electroless Nickel (4)

ACCESSORIES

Locknut - Brass (EX-BLN); 316 Stainless Steel (EX-SLN)
Earth Tag - Brass (EX-BET), 316 Stainless Steel (EX-SET)
IP Washer - Nylon (EX-NSW); Red Fibre (EX-FSW)
Serrated Lock Washer - 316 Stainless Steel (EX-SSW), Galvanised Steel (EX-GSW)
Shroud - PVC (EX-PVC); PCP (EX-PCP); Low Smoke Zero Halogen (EX-LSH)

Gland and accessory kits:
K9 - includes gland, locknut and PVC shroud

Gland Size	Entry Threads		Entry Thread Length [B]	Max Across Corners [A]	Max Protrusion Length	Gland Seal Range Cable Outer/Lead Sheath [D[		Shroud Size
	Metric	NPT/BSP				Min	Max	
16	M20	N1 or N2	16	28.0	33.0	4.0	8.4	L24
20s	M20	N1 or N2	16	28.0	33.0	7.2	11.7	L24
20	M20	N1 or N2	16	33.0	33.0	9.6	14.0	L30
25	M25	N2 or N3	16	41.4	33.0	13.5	20.0	L38
32	M32	N3 or N4	16	50.6	33.0	19.5	26.3	L46
40	M40	N4 or N5	16	60.5	37.0	23.0	32.2	L55
50s	M50	N5 or N6	16	71.5	37.0	28.2	38.2	L65
50	M50	N6	16	71.5	37.0	33.2	44.1	L65
63s	M63	N6 or N7	19	88.0	37.0	39.3	50.1	L80
63	M63	N7	19	88.0	37.0	46.7	56.0	L80
75s	M75	N7 or N8	19	99.0	37.0	52.3	62.0	L90
75	M75	N8	19	99.0	37.0	58.1	68.0	L90
80	M80 x 2	N8 or N9	25	115.2	50.0	62.3	72.0	L104
85	M85 x 2	N8 or N9	25	115.2	50.0	69.1	78.0	L104
90	M90 x 2	N9 or N10	25	125.7	50.0	74.1	84.0	L114
100	M100 x 2	N9 or N10	25	125.7	50.0	82.1	90.0	L114
All Dimensions are in Millimeters								

NOTES:

- NPT entry thread reference details on page 53.
- Gland Size does not necessarily equate to the entry thread size.
- Please note that dimensions (A) and (B) may differ for glands with non-Metric entry threads. Please refer to our thread data tables for specific dimensions.
- Unless otherwise stated ISO Metric entry threads have a 1.5mm pitch.
- Full assembly instructions are avalable upon request, the instructions should be read prior to installation and adhered to in full.

EXR

EXR Series Dual Certified Adaptors and Reducers provide a method of matching electrical thread forms on Ex equipment while maintaining Flameproof Exd and Increased Safety Exe methods of explosion protection and IP66, 68 for IEC type applications. Class I, Division 1 and NEMA 4X, 6P for NEC/CEC type applications.

EXAMPLE PART NUMBER

EXR [W] [Y] [ZZ1] [ZZ2] Sample: EXR-B-0-M20-M20

W - Material (B = Brass / S = Stainless Steel)
Y - Plating (0 = No Plating / 1 = Nickel / 2 = Tin / 3 = Zinc / 4 = Electroless Nickel)
ZZ1 - Male Thread
ZZ2 - Female Entry Thread

CERTIFICATION

CENELEC
SIRA 00ATEX 1094 (Metric Female)
SIRA 99ATEX 1115U (Non-Metric Female)
I M2 II 2DG E Ex de IandIIC

CSA / A Ex
Class I, Zone 1, Ex de IandIIC
Class I, Division 1and2 ABCD
Class II EFG, Class III

GOST R-Exde IICU
POCC GB 05.B00482

INGRESS PROTECTION

IP66 68, CSA Enclosure Type (NEMA) 4X 6P

IMPACT RESISTANCE

20Nm

OPERATING TEMPERATURES

-50°C to +85°C

MATERIALS

Brass CZ121 (EXR-B)
316 Stainless Steel (EXR-S)

THREADS

ISO Metric; NPT; NPS; ISO Pipe Thread (BSP Taper, BSP Parallel);

SEALS

The standard 'O' Ring material is Nitrile.
Tapered male thread options are not normally supplied c/w 'O' ring seal, thread sealant should be used to maintain the desired level of ingress protection

PLATING

Nickel (1); Tin (2); Zinc (3); Electroless Nickel (4)

SIZES AVAILABLE AND DIMENSION REFERENCES							
Metric	Bore	NPT	Bore	ISO Pipe	Bore	Et	Bore
M16	10.0						
M20	14.0	N1	15.0	1/2"	15.0	3/4"	14.0
M25	18.0	N2	19.0	3/4"	19.0	1"	18.0
M32	24.0	N3	25.0	1"	25.0	N4	24.0
M40	32.0	N4	32.0	N4	32.0	11/2"	32.0
M50	41.0	N5	38.0	11/2"	38.0	2"	41.0
M63	53.0	N6	49.0	2"	49.0	N7	53.0
M75	64.0	N7	60.0	N7	60.0	3"	64.0
M80 x 2.0	69.0	N8	75.0	3"	75.0		
M85 x 2.0	73.0	N9	88.0	31/2"	88.0		
M90 x 2.0	78.0	N10	100.0	4"	100.0		
M100 x 2.0	88.0						
All Dimensions are in Millimeters							

NOTES:

- Full installation instructions are supplied with adaptors and reducers, the instructions must be read prior to installation and adhered to in full
- Unless otherwise stated ISO Metric entry threads have a 1.5mm pitch
- For Flameproof Exd applications the female thread into which the adaptor or reducer is to be fitted must comply with clause 5.3 of EN 50018:2000 (clause 5.3 IEC 79-1) and an engagement of at least 5 full threads must be achieved for parallel threads and should be achieved for tapered threads
- For NEC/CEC Explosion Proof applications an engagement of at least 8 full threads must be achieved for parallel threads and 5 full threads must be achieved for tapered threads
- Where EXR adaptors and reducers are fitted into non-metallic Increased Safety Exe enclosures they must be included within the earth circuit of the system
- 316 Stainless Steel versions do not feature a marking band. This reduces the overall length of reducers by 5mm, it does not affect the overall length of Adaptor
- Adaptors are used where the thread size of the cable gland or connection device is larger than, or of an equivalent size to the entry thread of the enclosure
- Reducers are used to reduce the entry thread of an enclosure to accept a cable gland or connection device with a smaller thread

EXRN

EXRN Series Certified Adaptors and Reducers provide a method of matching electrical threadforms on Ex equipment while maintaining Increased Safety Exe methods of explosion protection and IP66, 68 for IEC type applications.

Adaptors are used where the thread size of the cable gland or connection device is larger than, or of equivalent size to the entry thread of the enclosure.

Reducers are used to reduce the entry thread of an enclosure to acept a cable gland or connection device with a smaller thread.

EXAMPLE PART NUMBER

EXRN [ZZ1] [ZZ2]
ZZ1 - Male Thread
ZZ2 - Female Entry Thread

Sample: EXRN-M20-M25

CERTIFICATION

CENELEC
SIRA 00ATEX 3091 (Metric Female)
SIRA 99ATEX 3116U (Non-Metric Female)
II 2DG E Ex e II

CSA / A Ex
Class I, Zone 1, Ex e II
Class I, Division 2 ABCD
Class II EFG, Class III

INGRESS PROTECTION

IP66 68, CSA Enclosure Type (NEMA) 4X 6P

OPERATING TEMPERATURES

-50°C to +85°C

IMPACT RESISTANCE

7Nm

MATERIALS

30% Glass Filled Nylon (EXRN)

THREADS

ISO Metric; NPT; NPS; ISO Pipe Thread (BSP Taper, BSP Parallel)

SEALS

The standard 'O' Ring material is Nitrile

SIZES AVAILABLE AND DIMENSION REFERENCES							
Metric	Bore	NPT	Bore	ISO Pipe	Bore	ET	Bore
M16	9.3						
M20	11.0	N1	12.0	I1	12.0	E2	11.0
M25	16.0	N2	13.0	I2	13.0	E3	16.0
M32	21.0	N3	18.0	I3	18.0	E4	21.0
M40	31.0	N4	33.0	I4	33.0	E5	31.0
M50	40.0	N5	38.0	I5	38.0	E6	40.0
All Dimensions are in Millimeters							

NOTES:

- Full installation instructions are supplied with adaptors and reducers, the instructions must be read prior to installation and adhered to in full
- Unless otherwise stated ISO Metric entry threads have a 1.5mm pitch
- Adaptors are used where the thread size of the cable gland or connection device is larger than, or of an equivalent size to the entry thread of the enclosure
- Reducers are used to reduce the entry thread of an enclosure to accept a cable gland or connection device with a smaller thread

EXIA Insulating Adaptors

EXIA series Insulated Adaptors provide a method of insulating the cable gland or connection device from the equipment into which it has been installed. EXIA series Insulated Adaptors maintain Flameproof Exd method of explosion protection and IP66, 68 for IEC type applications. Class I, Division 1 and NEMA 4X, 6P for NEC/CEC type applications.

EXAMPLE PART NUMBER

EXIA [W] [X] [ZZ1] [ZZ2]

- **W** - Material (B = Brass / S = Stainless Steel)
- **Y** - Plating (0 = No Plating / 1 = Nickel / 2 = Tin / 3 = Zinc / 4 = Electroless Nickel)
- **ZZ1** - Male Thread
- **ZZ2** - Female Entry Thread (See NPT reference data on page 53)

Sample:EXIA-B-1-M20-N1

CERTIFICATION

CENELEC
SIRA 00ATEX 1098 (Metric Female)
SIRA 99ATEX 1117U (Non-Metric Female)
II 2DG E Ex d IIC

CSA / A Ex
Class I, Zone 1, Ex d IIC
Class I, Division 2 ABCD
Class II EFG, Class III

GOST R-Exde IICY
POCC GB 05.B00482

APPLICATION

To avoid relying on the contact between cable termination and equipment enclosure for grounding the cable armor, an insulated adaptor can be fitted to both ends of the cable with a grounding device (i.e. earth tag/lug) fitted between the adaptor and the termination. The armor current can then be taken from the grounding device to ground in a controlled, positive manner that can be inspected easily.

Single Point Grounding
- In many application it is sufficient to ground the cable armor at one end. For single point grounding the insulated adaptors would again be used at both ends of the cable but with the earth tag fitted only to the end where grounding is required.

Single Point Grounding can
- reduce the circulating currents that can cause heating of high capacity cables.
- reduce the risk of damage to electronic equipment within the enclosure in the even of a short circuit to ground through the enclosure.
- reduce the problems of electrical noise on the armor affecting the clean earth required for some sensitive instruments.

Electrical properties of insulating material
- Dielectric strength: 90KV/mm
- Volume resistivity: 8.6 x 10x14 O/cm
- Minimum thickness of insulator: 5mm +/- 1mm
- 2KV 'Wet Withstand' Tested

INGRESS PROTECTION

IP54, CSA Enclosure Type (NEMA) 3
IP66 68 can be maintained with the use of either IP washers or a non-hardening thread sealant

OPERATING TEMPERATURES

-50°C to +85°C

MATERIALS
Brass CZ121 (EXIA-B) 316 Stainless Steel (EXIA-S)

IMPACT RESISTANCE
7Nm

THREADS
ISO Metric; NPT; NPS; ISO Pipe Thread (BSP Taper, BSP Parallel)

PLATING
Nickel (1); Tin (2); Zinc (3); Electroless Nickel (4)

SIZES AVAILABLE AND DIMENSION REFERENCES

Metric	Hex A/F	Hex A/C	Total Length	Male Length	Female Depth	Bore
M20	30.5	35.5	54.0	16.0	17.0	13.5
M25	37.6	43.2	54.0	16.0	17.0	19.0
M32	47.2	54.3	54.0	16.0	17.0	25.0
M40	55.9	64.1	54.0	16.0	17.0	30.0
M50	70.1	80.8	54.0	16.0	17.0	40.5
M63	80.0	92.0	54.0	16.0	17.0	53.0
M75	95.3	109.5	54.0	16.0	17.0	65.0
M80 x 2.0	100.0	114.0	63.0	20.0	22.0	70.0
M85 x 2.0	106.4	114.0	63.0	20.0	22.0	75.0
M90 x 2.0	106.4	114.0	63.0	20.0	22.0	80.0

All Dimensions are in Millimeters

NOTES:

- Full installation instructions are supplied with insulated adaptors, the instructions must be read prior to installation and adhered to in full
- Unless otherwise stated ISO Metric entry threads have a 1.5mm pitch
- For Flameproof Exd applications the female thread into which the adaptor is to be fitted must comply with clause 5.3 of EN 50018:2000 (clause 5.3 IEC 79-1) and an engagement of at least 5 full threads must be achieved for parallel threads and should be achieved for tapered threads

EXSPH Stopping Plugs

EXSPH Series Dual Certified Metallic Dome Head Stopping Plugs provide a method of filling unused entries in Ex equipment while maintaining Flameproof Exd and Increased Safety Exe methods of explosion protection and IP66, 68 for IEC type applications. Class I, Division 1 and NEMA 4X, 6P for NEC/CEC type applications.

EXAMPLE PART NUMBER

EXSPH [W] [Y] [ZZ]

W - Material (B = Brass / S = Stainless Steel)
Y - Plating (0 = No Plating / 1 = Nickel / 2 = Tin / 3 = Zinc / 4 = Electroless Nickel)
ZZ - Male Entry Thread

Sample: EXSPH-B-1-M20

CERTIFICATION

CENELEC
SIRA 00ATEX1094 I M2 II 2DG E Ex de IandIIC

CSA / A Ex
Class I, Zone 1, Ex de IandIIC
Class I, Division 1and2 ABCD
Class II EFG, Class III

GOST R-Exde IICY
POCC GB 05.B00482

INGRESS PROTCTION

IP66 68, CSA Enclosure Type (NEMA) 4X 6P

IMPACT RESISTANCE

20Nm

OPERATING TEMPERATURES

-50°C to +85°C

MATERIALS

Brass CZ121 (SPMH-B)
316 Stainless Steel (SPMH-S)

THREADS

ISO Metric; NPT; NPS; ISO Pipe Thread (BSP Taper, BSP Parallel)

SEALS

The standard 'O' Ring material is Nitrile

PLATING

Nickel (1); Tin (2); Zinc (3); Electroless Nickel (4)

SIZES AVAILABLE AND DIMENSION REFERENCES					
Metric	Dim Ref	NPT	Dim Ref	ISO Pipe	Dim Ref
M16	A				
M20	B	N1	C	P1	C
M25	B	N2	C	P2	C
M32	B	N3	E	P3	C
M40	B	N4	E	P4	C
M50	B	N5	E	P5	C
M63	B	N6	E	P6	C
M75	B	N7	F	P7	C
M80 x 2.0	D	N8	F	P8	C
M85 x 2.0	D	N9	F		
M90 x 2.0	D	N10	F		
M100 x 2.0	D				

DIMENSIONS						
Dimension Reference	A	B	C	D	E	F
Head Diameter	Minimum 6.0mm larger than the major thread diameter					
Hex Socket A/F	8.0	10.0	10.0	10.0	10.0	10.0
Total Length	21.5	21.5	24.5	25.5	29.0	39.0
Thread Length	16.0	16.0	19.0	22.0	23.5	33.5
All Dimensions are in Millimeters						

NOTES:

- EXSPH type stopping plugs are designed for use within either clearance holes or parallel threaded entries, for taper threaded entries we would recommend the use of EXSP type stopping plugs on page 48.
- Full installation instructions are supplied with stopping plugs, the instructions must be read prior to installation and adhered to in full
- Unless otherwise stated ISO Metric entry threads have a 1.5mm pitch
- For Flameproof Exd applications the female thread into which the stopping plug is to be fitted must comply with clause 5.3 of EN 50018:2000 (clause 5.3 IEC 79-1) and an engagement of at least 5 full threads must be achieved for parallel threads and should be achieved for tapered threads
- For NEC/CEC Explosion Proof applications an engagement of at least 8 full threads must be achieved for parallel threads and 5 full threads must be achieved for tapered threads
- Where metallic stopping plugs are fitted into non-metallic Increased Safety Exe enclosures they must be included within the earth circuit of the system

EXSPHN Stopping Plug

EXSPHN Series Glass Filled Nylon Dome Head Stopping Plugs provide a method of filling unused entries in increased safety equipment, maintaining Increased Safety Exe methods of explosion protection and IP66, 68 for IEC type applications.

EXAMPLE PART NUMBER

EXSPHN [ZZ]
ZZ - Male Thread size

Sample: EXSPHN-M20

CERTIFICATION

CENELEC
SIRA 00ATEX3091 II 2DG E Ex eII

CSA / A Ex
Class I, Zone 1, Ex e II
Class I, Division 2 ABCD
Class II EFG, Class III

INGRESS PROTECTION

IP66 68, CSA Enclosure Type (NEMA) 4X 6P

IMPACT RESISTANCE

7Nm

OPERATING TEMPERATURES

-50°C to +85°C

MATERIALS

30% Glass Filled Nylon (SPMHN)

THREADS

ISO Metric; NPT; NPS; ISO Pipe Thread (BSP Taper, BSP Parallel); PG

SEALS

The standard 'O' Ring material is Nitrile

SIZES AVAILABLE AND DIMENSION REFERENCES			
Metric	**Dim Ref**	**NPT**	**Dim Ref**
M16	B		
M20	C	N1	D
M25	C	N2	D
M32	C	N3	F
M40	C	N4	F
M50	C	N5	F
M63	C	N6	F
M75	C	N7	G

DIMENSIONS			
Dimension Reference	**A**	**B**	**C**
Head Diameter	Minimum 6.0mm larger than the major thread diameter		
Hex Socket A/F	6.0	8.0	10.0
Total Length	21.5	21.5	21.5
Thread Length	16.0	16.0	16.0
All Dimensions are in Millimeters			

NOTES:

- EXSPHN type stopping plugs are designed for use within either clearance holes or parallel threaded entries, for taper threaded entries we would recommend the use of EXSP type stopping plugs on page 48.
- Full installation instructions are supplied with adaptors and reducers, the instructions must be read prior to installation and adhered to in full.
- Unless otherwise stated ISO Metric entry threads have a 1.5mm pitch.

EXSP Type Stopping Plug

EXSP Series Certified Metallic Stopping Plugs provide a method of filling unused entries in Ex equipment, maintaining Flameproof Exd method of explosion protection and IP54 for IEC type applications. Class I, Division 1 and NEMA 3 for NEC/CEC type applications.

EXSP-A Type - Externally accessible hexagon recess
EXSP-B Type - Internally accessible hexagon recess

EXAMPLE PART NUMBER

EXSP [T] [W] [Y] [ZZ]

- **T** - Type (A = Type A / B = Type B)
- **W** - Material (B = Brass / S = Stainless Steel)
- **Y** - Plating (0 = No Plating / 1 = Nickel / 2 = Tin / 3 = Zinc / 4 = Electroless Nickel)
- **ZZ** - Male Thread Size

Sample: EXSP-A-B-1-M20

CERTIFICATION

CENELEC
SIRA 99ATEX1113 II 2DG E Ex d IIC

CSA / A Ex
Class I, Zone 1, Ex d IIC
Class I, Division 1and2 ABCD
Class II EFG, Class III

INGRESS PROTECTION

IP54, CSA Enclosure Type (NEMA) 3

IMPACT RESISTANCE

7Nm

OPERATING TEMPERATURES

-50°C to +85°C

MATERIALS

Brass CZ121 (EXSP-T-B)
316 Stainless Steel (EXSP-T-S)

THREADS

ISO Metric; NPT; NPS; ISO Pipe Thread (BSP Taper, BSP Parallel)

PLATING

Nickel (1); Tin (2); Zinc (3); Electroless Nickel (4)

SIZES AVAILABLE AND DIMENSION REFERENCES					
Metric	Dim Ref	NPT	Dim Ref	ISO Pipe	Dim Ref
M16	A				
M20	B	N1	C	P1	E
M25	B	N2	C	P2	E
M32	B	N3	D	P3	G
M40	B	N4	D	P4	G
M50	B	N5	D	P5	G
M63	B	N6	D	P6	G
M75	B	N7	F	P7	G
M80 x 2.0	F	N8	F	P8	G
M85 x 2.0	F	N9	F		
M90 x 2.0	F	N10	F		
M100 x 2.0	F				

DIMENSIONS							
Dimension Reference	A	B	C	D	E	F	G
Hex Socket A/F	8.0	10.0	10.0	10.0	10.0	10.0	10.0
Length (min)	17.0	17.0	14.0	16.0	18.0	22.0	25.0
All Dimensions are in Millimeters							

NOTES:

- Full installation instructions are supplied with stopping plugs, the instructions must be read prior to installation and adhered to in full
- Unless otherwise stated ISO Metric entry threads have a 1.5mm pitch
- For Flameproof Exd applications the female thread into which the stopping plug is to be fitted must comply with clause 5.3 of EN 50018:2000 (clause 5.3 IEC 79-1) and an engagement of at least 5 full threads must be achieved for parallel threads and should be achieved for tapered threads
- For NEC/CEC Explosion Proof applications an engagement of at least 8 full threads must be achieved for parallel threads and 5 full threads must be achieved for tapered threads

EXBD

EXBD Series Breather Drain provides a method of effectively draining any moisture within an enclosure whilst allowing the air inside the enclosure to breathe with the surrounding atmosphere. EXBD series breather drains maintain Increased Safety Exe method of explosion protection and IP66 for IEC type applications.

EXAMPLE PART NUMBER

EXBD [W] [Y] [ZZ]

- **W** - Material (B = Brass / S = Stainless Steel / N = 30% Glass Filled Nylon)
- **Y** - Plating (0 = No Plating / 1 = Nickel / 2 = Tin / 3 = Zinc / 4 = Electroless Nickel)
- **YY** - Male Thread
- **ZZ** - 10 or 15

Sample: EXBD-B-0-M20-15

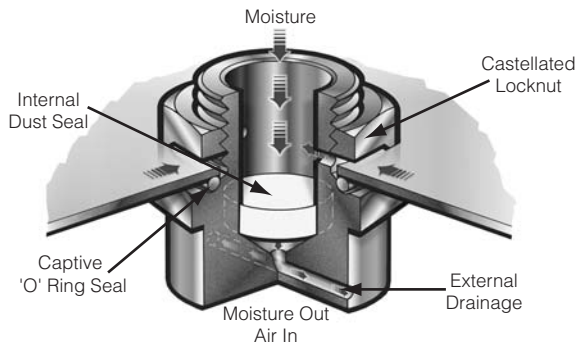

CERTIFICATION

CENELEC
SIRA99ATEX3050U I M2 II 2DG EExe I/II; II 2DG E Exe (Glass Filled Nylon)

CSA / A Ex
Class I, Zone 1, Exe II; Class I Division 2, Groups ABCD

GOST R-Exde IICY
POCC GB 05.B00482

APPLICATION

Internal Dust Seal provides ingress protection to IP66 and 4x, with the largest possible pore size to aid draining, whilst retaining filtration capabilities that remove debris from the moisture and retains it on the surface where it can easily be removed with compressed air. Additionally the structural strength and chemical resistance characteristics of the material enable the filter to meet the requirements of hazardous area installations

Castellated Locknut allows moisture to pass between the locknut and the enclosure, draining via holes in the thread without any build up of moisture in the bottom of the enclosure

Captive 'O' Ring Seal is located within a recess on the face of the breather drain again optimising ingress protection, ensuring the 'o'ring is not displaced during installation and helping protect the 'O' ring from the environmental damage

External Drainage via two ports optimises ingress protection without compromising the draining capabilities

INGRESS PROTECTION

IP66, CSA Enclosure Type 4x, NEMA 4x

IMPACT RESISTANCE

20Nm. (7Nm GF Nylon)

OPERATING TEMPERATURES

-50°C to +85°C

MATERIALS

Brass CZ121 (EXBD-B)
316 Stainless Steel (EXBD-S)
30% Glass Filled Nylon (EXBD-N)

VARIATIONS

Clearance Hole: 10mm length of thread, supplied complete with a castellated locknut and having 2 holes in the thread wall positioned directly opposite each other (EXBD-W-Y-YY-10)

Threaded Entry: 15mm length of thread, either supplied with castellated locknut (EXBD-W-Y-YY-15) or without castellated locknut (EXBD-W-Y-YY-15NL) and having 3 holes in the thread wall, offset to provide a 9mm range to accommodate differing wall thickness.

THREADS	SEALS	PLATING
ISO Metric; NPT; NPS; ISO Pipe Thread (BSP Taper, BSP Parallel); PG	The standard 'O' Ring material is Nitrile	Nickel (1); Tin (2); Zinc (3); Electroless Nickel (4)

DIMENSIONAL DATA				
Size	Hex A/F	Hex A/C	Thread Length	Head Length
M20 - N1	28.6mm	32.9mm	10 (2 Hole) or 15 (3 Hole)	15mm
M25 - N2	34.9mm	40.2mm		
All Dimensions are in Millimeters				

NOTES:

- 30% glass filled nylon variations are only available with 15mm length of thread version and are supplied with or without a brass castellated nut
- Full installation instructions are supplied with the breather drain, the instructions must be read prior to installation and adhered to in full
- Unless otherwise stated ISO Metric entry threads have a 1.5mm pitch
- Where metallic breather drains are fitted into non-metallic Increased Safety Exe enclosures they must be included within the earth circuit of the system

Accessories: General

A full range of accessories including locknuts, earthtags, sealing washers, serrated washers and shrouds for use with all our cable glands

AVAILABILITY

ACCESSORY TYPE	GLAND TYPES/SIZE	THREAD TYPES			
		METRIC	NPT	BSP	FRENCH
Locknuts provide a method of securing a threaded entry component into a piece of equipment					
Brass (EX-BLN)	All	M16 to M100	1/2" to 4"	1/2" to 4"	F48
316 Stainless Steel (EX-SLN)	316 Stainless Steel	M16 to M100	1/2" to 4"	1/2" to 4"	F48
Nylon (EX-NLN)	Nylon	M20 to M63	-	-	-
Steel (EX-MLN)	Industrial	M20 to M50	-	-	-
Earth Tags provide an earth bond connection for an entry component					
Brass (EX-BET)	All	M16 to M100	1/2" to 4"	1/2" to 4"	F48
IP Sealing Washers are fitted between an entry component and the equipment to maintain the IP rating of the equipment					
Nylon (EX-NSW)	All	M16 to M100	1/2" to 4"	1/2" to 4"	F48
Red Fibre (EX-SFW)	All	M20 to M75	-	-	-
Serrated Star Washers can be used in conjunction with a locknut to provide additional fixing security and improve bonding					
316 Stainless Steel (EX-SSW)	All	M16 to M100	1/2" to 4"	1/2" to 4"	F48
Galvanised Steel (EX-GSW)	All	M20 to M75	-	-	-
Shrouds can be used to protect the gland from the surrounding environment					
PVC (EX-PVC)	16 to 100				
PCP (EX-PCP)	16 to 85	Shrouds are not available for all glands, please see specific gland page for exact details			
LSOH (EX-LSH)	16 to 85				

NOTES:

- As standard ISO Metric threads are supplied with a 1.5mm pitch up to and including M75 and a 2.0mm pitch for sizes above M75

Entry Thread Reference Tables

Thread Types	Thread Ref	Size	Major Ø	TPI	Pitch	Thread Length	Min Hex A/C
ISO METRIC IEC 60423 1993	M16	16 x 1.5	15.97	16.93	1.50	16.0	26.5
	M20	20 x 1.5	19.97	16.93	1.50	16.0	33.0
	M25	25 x 1.5	24.97	16.93	1.50	16.0	41.4
	M32	32 x 1.5	31.97	16.93	1.50	16.0	50.6
	M40	40 x 1.5	39.97	16.93	1.50	16.0	60.4
	M50	50 x 1.5	49.97	16.93	1.50	16.0	71.5
	M63	63 x 1.5	62.97	16.93	1.50	19.0	88.0
	M75	75 x 1.5	74.97	16.93	1.50	19.0	99.0
	M80	80 x 2.0	19.97	12.70	2.00	25.0	115.2
	M85	85 x 2.0	84.97	12.70	2.00	25.0	115.2
	M90	90 x 2.0	89.97	12.70	2.00	25.0	125.7
	M100	100 x 2.0	99.97	12.70	2.00	25.0	125.7
NPT ANSI B1.20.1 1983	N1	1/2"	21.22	14.00	1.81	19.9	26.5
	N2	3/4"	26.57	14.00	1.81	20.1	33.0
	N3	1"	33.23	11.50	2.20	21.5	41.4
	N4	11/4"	41.99	11.50	2.20	25.6	50.6
	N5	11/2"	48.05	11.50	2.20	26.0	60.5
	N6	2”	60.09	11.50	2.20	26.9	71.5
	N7	21/2"	72.70	8.00	3.18	39.9	88.0
	N8	3”	88.61	8.00	3.18	41.5	99.0
	N9	31/2"	101.36	8.00	3.18	42.8	115.2
	N10	4"	113.97	8.00	3.18	44.0	125.7
NPS ANSI B1.20.1 1983	S1	1/2"	20.90	14.00	1.81	19.9	26.5
	S2	3/4"	26.26	14.00	1.81	20.1	33.0
	S3	1"	32.84	11.50	2.20	21.5	41.4
	S4	11/4"	41.61	11.50	2.20	25.6	50.6
	S5	11/2"	47.67	11.50	2.20	26.0	60.5
	S6	2"	59.72	11.50	2.20	26.9	71.5
	S7	21/2"	72.16	8.00	3.18	39.9	88.0
	S8	3"	88.06	8.00	3.18	41.5	99.0
	S9	31/2"	100.78	8.00	3.18	42.8	115.2
	S10	4"	113.43	8.00	3.18	44.0	125.7
ISO Pipe Parallel ISO R/7; BS2779 (BSPP, G, R, PF)	F48	PG48 (FR)	59.61	11.00	2.31	26.9	71.5
	P1	1/2"	20.96	14.0	1.81	19.9	26.5
	P2	3/4"	26.44	14.0	1.81	20.1	33.0
	P3	1”	33.25	11.0	2.31	25.0	41.4
	P4	11/4"	41.91	11.0	2.31	25.6	50.6
	P5	11/2"	47.80	11.0	2.31	26.0	60.5
	P6	2"	5961	11.0	2.31	26.9	71.5
	P7	21/2"	75.18	11.0	2.31	39.9	88.0
ISO Pipe Taper to ISO R/7; BS21 (BSPT, GK)	T1	1/2"	20.96	14.0	1.81	19.9	26.5
	T2	3/4"	26.44	14.0	1.81	20.1	33.0
	T3	1"	33.25	11.0	2.31	25.0	41.4
	T4	11/4"	41.91	11.0	2.31	25.6	50.6
	T5	11/2"	47.80	11.0	2.31	26.0	60.5
	T6	2"	5961	11.0	2.31	26.9	71.5
	T7	21/2"	75.18	11.0	2.31	39.9	88.0

Ingress Protection

It is essential when selecting cable glands and/or accessories to ensure that the products will maintain the IP rating of the equipment and the integrity of the installation.

IP Codes are based on the IEC Standard 529, degrees of protection provided by enclosures.

In most cases Peppers cable glands will maintain Ingress Protection of the equipment into which they are installed to:

IP 66

- Dust Tight. No ingress of dust possible.
- Protected against heavy seas or powerful jets of water

IP67

- Dust Tight. No ingress of dust possible
- Protected against harmful ingress of water when immersed between a depth of 150mm to 1m

IP68

- Dust Tight. No ingress of dust possible.
- Protected against submersion. Suitable for continuous immersion in water at stated depth.
- Depth stated for Amphenol cable glands is 25m

DTS 01 (Deluge)

- This test was originally constructed by shell and Esso in the UK to simulate the routine deluging of electrical equipment on offshore installations.

IP 54- Minimum requirement for Hazardous Location products

- Dust protected. Prevents ingress of dust sufficient to cause harm.
- Protected from splashing water from any direction

As a general guide to selecting the sealing method that is most likely to maintain the required IP rating for different entry types, we recommend:

- **Clearance Holes** - Integral 'O' ring seal or nylon IP washer
- **Parallel Threaded Entries** - Integral 'O' ring seal, IP washer or non-hardening thread sealant
- **Taper Threaded Entries** - Non-hardening thread sealant

Gland Weight Data

Gland Size	Entry Thread	Cable Gland Type										
		EX-20	EX-25	EE-30	EX-35	EX-40	EE-RG	EX-60	EX-65	EX-70	EX-75	CGA
16	M20	164	144	134	84	142	6	165	-	-	-	-
20s	M20	160	130	124	90	144	-	165	115	180	-	52
20	M20	250	186	180	94	158	8	240	170	260	215	84
25	M25	400	262	262	152	256	16	400	260	385	340	140
32	M32	750	420	402	176	298	28	725	384	570	485	180
40	M40	1095	672	680	332	556	35	1060	585	885	730	436
50s	M50	1415	980	1040	570	980	-	1435	-	1035	-	-
50	M50	1295	758	764	458	796	65	1340	700	1160	875	480
63s	M63	2345	1410	1410	850	1410	-	2100	-	1555	-	-
63	M63	2005	1140	1185	684	1170	74	2025	1040	1695	1355	910
75s	M75	1980	1745	1730	954	1565	-	2330	-	1750	-	-
75	M75	2200	1375	1495	764	1310	-	2240	1150	1880	1475	1070
80	M80	3970	3255	3130	1430	2130	-	4985	2730	3860	3415	1770
85	M85	3300	2655	2500	1290	1980	-	4065	2255	3250	2830	-
90	M90	4314	3559	3280	1510	2360	-	5215	2790	3985	3985	-
100	M100	3537	2795	3054	1485	2285	-	4410	2450	3580	3580	-

All weights are approximate and shown in grams

NOTES:

- Weights shown are for Brass versions (except Nylon EE-RG)
- To estimate weights for 316 Stainless Steel versions apply a factor of 0.92
- Weights for glands with non-metric entry threads will vary
- Approximate weights for EX-45, EX-50, EX-55 are available on application
- Approximate weights for CGDS, CGSS and CGU industrial glands are the same as for EX versions

Amphenol®/Pyle® Industrial Cord Grips

Amphenol®/Pyle® Industrial Cord Grips make sure your cord or cable stays in and everything else stays out. This product is designed for liquid-tight strain relief of cord, cable, and flexible conduit. Available in straight, 45°, and 90° styles, Amphenol®/Pyle® cord grips are UL listed, and CSA certified.

This section will provide information on a large family of cable pass-thru and strain relief devices for use with industrial connectors by showing complete assemblies as well as component parts. Contact your Amphenol®/Pyle® distributor for assistance.

Features & Benefits

UL Listed and CSA certified. Used for sealing where moving parts or handling can abuse connections.

Tapered rubber grommet and seat. Secure cord the *entire length of grommet* making a liquid-tight seal.

Variety of styles: straight, 45°, 90°, and flexible. Assures ease of installation and permits custom cable routing

Various strain relief options: Standard compression nut, mechanical clamp nut or basket weave styles.

Tapered conduit threads. Provide strong water and oil-tight joint.

Machined components. Strong, lightweight, and have long service life.

Male and female threads. Provides versatility in panelboard or threaded hub applications

Applications

FOR POWER CONTROL:

- Switchboards
- Machine Tools
- Heating and Cooling
- Lighting and Ballasts
- Portable Equipment
- Motors and Generators
- Production Machinery
- Processing Equipment
- Robotics and Welding
- Standby Power
- Medical/Dental Equipment

FOR COMMUNICATION:

- Radio and Radar
- Television
- Transformers
- Data Processing
- Instruments

FOR TRANSPORATION

- Shipyards
- Refrigerated Containers
- Railroad and Trucking

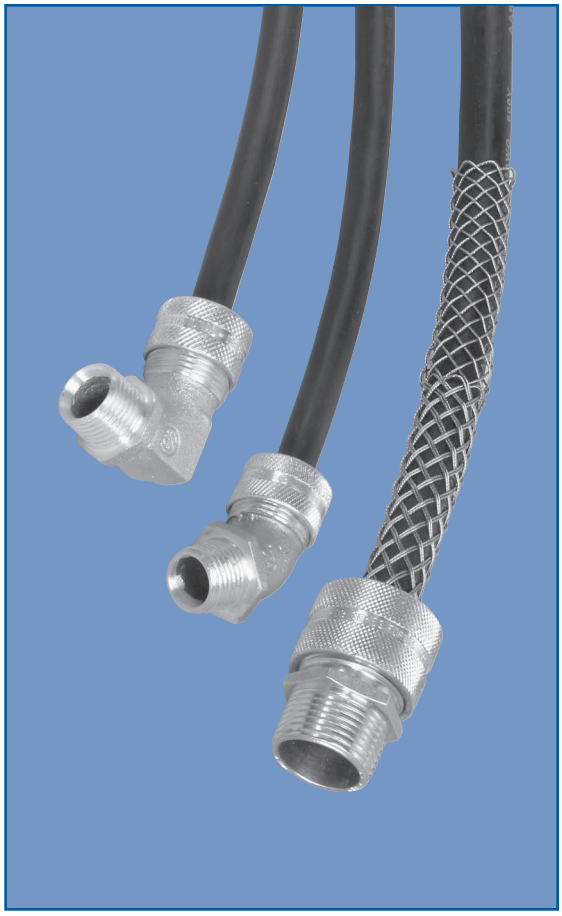

Materials and Finishes

Straight Bodies	Copper-free aluminum bar stock
45° & 90° Bodies	Cadmium plated ferrous alloy
Grommets	Oil-resistant synthetic rubber
Washers	Cadmium plated cold rolled steel
Compression Nuts	Copper-free aluminum bar stock
Mechanical Nuts	Cast Aluminum

Cord Grip Specifications

Allowable Ampacities of Insulated Conductors

as taken from 1987 Edition of National Electric Code.

Rated 0-2000 Volts, 60° to 90°
Not More Than Three Conductors in Raceway or Cable or Earth (Directly Buried), Based on Ambient Temperature of 30°C(86°F)

	Temperature Rating of Conductors (Copper)			
Size	60°C (140°F)	75°C (176°F)	85°C (185°F)	90°C (194°F)
AWG MCM	†TW, †UF	†FEPW, †RH, †RHW, †THW, †THWN,†XHHW, †USE, †ZW	V	TA, TBS, SA, AVB, SIS, †FEP, †FEPB, †RHH, †THHN †XHHW*
18	. . .	. . .	. . .	14
16	. . .	. . .	18	18
14	20†	20†	25	25†
12	25†	25†	30	30†
10	30	35†	40	40†
8	40	50	55	55
6	55	65	70	75
4	70	85	95	95
3	85	100	110	110
2	95	115	125	130
1	110	130	145	150
0	125	150	165	170

Ampacity Correction Factors

For ambient temperatures other than 30°C, multiply the ampacities shown above by the appropriate factor shown below.

Ambient Temp. °C (°F)	60°C (140°F)	75°C (176°F)	85°C (185°F)	90°C (194°F)
31-40 (87-104)	.82	.88	.90	.91
41-45 (105-113)	.71	.82	.85	.87
46-50 (114-122)	.58	.75	.80	.82
51-60 (123-141)	. . .	.58	.67	.71
61-70 (142-158)	. . .	.35	.52	.58
71-80 (159-176)	. . .	. . .	.30	.41

†The overcurrent protection for conductor types marked with an obelisk (†) shall not exceed 15 amperes for 14AWG and 30 amperes for 10 AWG copper.

*For dry locations only. See 75°C column for wet locations

Fraction Conversion Table

Fraction	Decimal	Mm	Fraction	Decimal	Mm
1/64	0.0156	0.379	33/64	0.5156	13.097
1/32	0.0312	0.794	17/32	0.5312	13.494
3/64	0.0469	1.191	35/64	0.5469	13.891
1/16	0.0625	1.588	9/16	0.5625	14.288
5/64	0.0781	1.984	37.64	0.5781	14.684
3/32	0.0938	2.381	19/32	0.5938	15.081
7/64	0.1094	2.778	39/64	0.6094	15.478
1/8	0.1250	3.175	5/8	0.6250	15.875
9/64	0.1406	3.572	41/64	0.6406	16.272
5/32	0.1562	3.969	21/32	0.6562	16.669
11/64	0.1719	4.366	43/64	0.6719	17.066
3/16	0.1875	4.762	11/16	0.6875	17.462
13/64	0.2031	5.159	45/64	0.7031	17.859
7/32	0.2188	5.556	23/32	0.7188	18.256
15/64	0.2344	5.953	47/64	0.7344	18.653
1/4	0.2500	6.350	3/4	.7500	19.050
17/64	0.2656	6.747	49/64	0.7655	19.447
9/32	0.2812	7.144	26/32	0.7812	19.844
19/64	0.2969	7.541	51/64	0.7969	20.241
5/16	0.3125	7.938	13/16	0.8125	20.638
21/64	0.3281	8.334	53/64	0.8281	21.034
11/32	0.3438	8.731	27/32	0.8438	21.431
23/64	0.3594	9.128	55/64	0.8594	21.828
3/8	0.3750	9.525	7/8	0.8750	22.225
25/64	0.3906	9.922	57/64	0.8906	22.622
13/32	0.4062	10.319	29/32	0.9062	23.019
27/64	0.4219	10.716	59/64	0.9219	23.416
7/16	0.4375	11.112	15/16	0.9375	23.812
29/64	0.4531	11.509	61/64	0.9531	24.209
15/32	0.4688	11.906	31/32	0.9688	24.606
31/64	0.4844	12.303	63/64	0.9844	25.003
1/2	0.5000	12.700	1	1.0000	25.400

Cord Grip Specifications

Selected Cord and Cable Diameters

Type of Cord	AWG Size of Conductors	Number of Conductors and Approximate O.D. in Inches		
		2	3	4
SJ, SJO	18	.300	.330	.360
	16	.330	.360	.390
	14	.375	.395	.420
S, SO, ST, STO	18	.385	.400	.430
	16	.400	.425	.480
	14	.530	.560	.605
	12	.600	.635	.665
	10	.640	.690	.745
	8	.820-.930	.885-1.010	.975-1.100
W	6	.700-.840	.750-.910	.820-.990
	4	1.080	1.170	1.270
	3	1.170	1.240	1.340
	2	1.270	1.340	1.480
	1	1.440	1.510	1.680
	1/0	1.520	1.650	1.790
	2/0	1.650	1.750	1.930
	3/0	1.770	1.890	2.070
	4/0	1.920	2.070	2.260
	250	2.160	2.390	–
	14	–	–	.410
	12	–	–	.450
	10	–	–	.530
Bus Drop Cable	8	–	–	.670

NOTE: Dimensions are approximate. When possible consult manufacturer's data.

Amperages of Electric Motors

Motor Horse Power	Motor Full Load Current (Amps)					
	Three Phase				Single Phase	
	200 V.	230V.	460V	575V.	115V.	230V.
1/20	0.39	0.34	0.17	0.14	1.30	0.65
1/12	0.55	0.48	0.24	0.19	1.90	0.95
1/8	0.74	0.64	0.32	0.26	2.60	1.30
1/6	0.90	0.78	0.39	0.31	3.24	1.62
1/4	1.22	1.06	0.53	0.42	4.40	2.20
1/3	1.52	1.32	0.66	0.53	5.47	2.74
1/2	2.07	1.80	0.90	0.72	7.45	3.73
3/4	2.88	2.50	1.25	1.00	10.1	5.07
1	3.68	3.20	1.60	1.28	126	6.31
1½	5.18	4.50	2.25	1.80	17.2	8.59
2	6.67	5.80	2.90	2.32	21.4	10.7
3	9.66	8.40	4.20	3.36	29.1	14.5
5	15.4	13.4	6.68	5.35	42.9	21.4
7½	22.6	19.6	9.82	7.86	58.4	29.2
10	29.7	25.8	12.9	10.3	. . .	36.3
15	43.6	38.0	19.0	15.2	. . .	49.4
20	57.4	49.9	24.9	20.0	. . .	. . .
25	70.9	61.7	30.8	24.7	. . .	. . .
30	84.3	73.3	36.7	29.3	. . .	. . .
40	111.	96.4	48.2	38.5	. . .	. . .
50	137.	119.	59.6	47.6	. . .	. . .
60	163.	142.	70.8	56.6	. . .	. . .
75	201.	175.	87.6	70.0	. . .	. . .

NOTE: These are approximate currents to be used for selecting cord wire sizes.

DB/DBM GROUP

Strain-relief connectors for flexible cord and cable

LISTED
File No. E53509

CERTIFIED
File No. LR-64107

small straight body, male thread

Aluminum body and compression nut with washer and single hole oil-resistant grommet

This small body connector is ideal for internal uses, as well as conduit hub and panel-board mounting into threaded bodies or with locknuts. Complete units listed require no other parts excecpt cable. Component parts allow expansion or updating of present equipment.

Suitable for use in hazardous locations per National Electric Code Class I, Div. 2; Class II, Div. 1 & 2; Class III, Div. 1&2.

Insulated throat option:

Add suffix "T" to all complete assembly part numbers on this page. E.g.: DB-9916T.

CONDUIT HUB SIZE	PANEL HOLE SIZE	CORD DIAMETER RANGE IN (MM)	COMPLETE ASSEMBLY PART NUMBERS		
			WITH COMPRESSION NUT	WITH MECHANICAL NUT	WITH WOVEN GRIP
1/4"	9/16"	.125-.187 (3.17-4.75)	DB-44316	. . . . .	. . . . .
		.187-.250 (4.75-6.35)	DB-4414	. . . . .	. . . . .
		.250-.312 (6.35-7.92)	DB-44516	. . . . .	. . . . .
3/8"	11/16"	.125-.187 (3.17-4.75)	DB-4316	. . . . .	. . . . .
		.187-.250 (4.75-6.35)	DB-414	. . . . .	. . . . .
		.250-.312 (6.35-7.92)	DB-4516	. . . . .	. . . . .
		.312-.375 (7.92-9.52)	DB-438	. . . . .	. . . . .
		.375-.437 (9.52-11.1)	DB-4	. . . . .	. . . . .
1/2"	7/8"	.125-.187 (3.17-4.75)	DB-3316	. . . . .	. . . . .
		.187-.250 (4.75-6.35)	DB-314	. . . . .	. . . . .
		.250-.312 (6.35-7.92)	DB-3516	. . . . .	. . . . .
		.312-.375 (7.92-9.52)	DB-338	. . . . .	. . . . .
		.375-.437 (9.52-11.1)	DB-3	. . . . .	. . . . .
		.125-.250 (3.17-6.35)	DB-7	DBM-1204-M	. . . . .
		.187-.312 (4.75-7.92)	DB-9516	DBM-1205-M	DBKM-1205
		.250-.375 (6.35-9.52)	DB-8	DBM-1206-M	DBKM-1206
		.312-.437 (7.92-11.1)	DB-9716	DBM-1207-M	DBKM-1207
		.375-.500 (9-52-12.7)	DB-9	DBM-1208-M	DBKM-1208
		*.437-.562 (11.1-14.3)	DB-9916	DBM-1209-M	DBKM-1209
		*.500-.625 (12.7-15.9)	DB-10	DBM-1210-M	DBKM-1210
		*.625-.687 (15.9-17.4)	DB-91116	DBM-1311-M	DBKM-1311
		*.687-.750 (17.4-19.1)	DB-934	DBM-1312-M	DBKM-1312
3/4"	1 1/8"	.125-.250 (3.17-6.35)	DB-614	DBM-2204-M	. . . . .
		.187-.312 (4.75-7.92)	DB-6516	DBM-2205	DBKM-2205
		.250-.375 (6.35-9.52)	DB-638	DBM-2206-M	DBKM-2206
		.312-.437 (7.92-11.1)	DB-6716	DBM-2207-M	DBKM-2207
		.375-.500 (9.52-12.7)	DB-612	DBM-2208-M	DBKM-2208
		.437-.562 (11.1-14.3)	DB-6919	DBM-2209-M	DBKM-2209
		.500-.625 (12.7-15.9)	DB-6	DBM-2210-M	DBKM-2210
		.625-.687 (15.9-17.4)	DB-111116	DBM-2311-M	DBKM-2311
		.687-.750 (17.4-19.1)	DB-11	DB-2312-M	DBKM-2312
		*.750-.875 (19.1-22.2)	DB-2514	DBM-2514-M	DBKM-2514
		*.875-1.00 (22.2-25.4)	DB-2516	DBM-2516-M	DBKM-2516
1"	1 3/8"	.375-.437 (9.52-11.1)	DB-33716	DBM-3307-M	DBKM-3307
		.437-.500 (11.1-12.7)	DB-3312	DBM-3308-M	DBKM-3308
		.500-.562 (12.7-14.3)	DB-33916	DBM-3309-M	DBKM-3309
		.562-.625 (14.3-15.9)	DB-3358	DBM-3310-M	DBKM-3310
		.625-.687 (15.9-17.4)	DB-331116	DBM-3311-M	DBKM-3311
		.687-.750 (17.4-19.1)	DB-33	DBM-3312-M	DBKM-3312
		.687-.812 (17.4-20.6)	DB-1413	DBM-3513-M	DBKM-3513
		.750-.875 (19.1-22.2)	DB-1478	DBM-3514-M	DBKM-3514
		.812-.937 (20.6-23.8)	DB-141516	DBM-3515-M	DBKM-2515
		*.875-1.00 (22.2-25.4)	DB-14	DBM-3516-M	DBKM-3516

*Maximum cord size will not pass through body without removing outer jacket. Other grommets both single and multi-hole are available–see page 70.

See pages 60-61 for dimensional information.

FORM SIZE	BODY BORE--IN (MM)	GROMMET	PLAIN WASHER	COMPRESSION NUT	MECHANICAL NUT	WOVEN GRIP	WOVEN GRIP WASHER	WOVEN GRIP NUT
	DB-4-G	DB-4-F			. . . . .	. . . . .	. . . . .	. . . . .
1	.35 (8.9)	DB-4-J	PX-4-CS	DB-4-B	. . . . .	. . . . .	. . . . .	. . . . .
		DB-4-D			. . . . .	. . . . .	. . . . .	. . . . .
		DB-4-F			. . . . .	. . . . .	. . . . .	. . . . .
		DB-4-J			. . . . .	. . . . .	. . . . .	. . . . .
1	DB-4-A	DB-4-D	PX-4-CS	DB-4-B	. . . . .	. . . . .	. . . . .	. . . . .
	.44 (11.2)	DB-4-E			. . . . .	. . . . .	. . . . .	. . . . .
		DB-4-C			. . . . .	. . . . .	. . . . .	. . . . .
		DB-4-F			. . . . .	. . . . .	. . . . .	. . . . .
		DB-4-J			. . . . .	. . . . .	. . . . .	. . . . .
1	DB-3-A	DB-4-D	PX-4-CS	DB-4-B	. . . . .	. . . . .	. . . . .	. . . . .
	.44 (11.2	DB-4-E			. . . . .	. . . . .	. . . . .	. . . . .
		DB-4-C			. . . . .	. . . . .	. . . . .	. . . . .
		DB-9-F				. . . . .	. . . . .	
		DB-9-V				DBKG-5	Δ	
		DB-9-E				DBKG-6	Δ	
2	DB-9-A	DB-9-J	PX-8-CS	DB-9-B	PX-10	DBKG-8	Δ	DBK-9-B
	.64 (16.3	DB-9-D				DBKG-8	Δ	
		DB-9-U				DBKG-10	Δ	
		DB-9-C				DBKG-10	PX-8-CS	
3	DB-934-A	DB-11-O	PX-11-CS	DB-11-B	PX-11	DBKG12	PX-11-CS	DBK-11-B
	.62 (15.7)	DB-11-C				DBKG-12	PX-11-CS	DBK-11-B
		DB-9-F				. . . . .	. . . . .	
		DB-9-V				DBKG-5	Δ	
		DB-9-E				DBKG-6	Δ	DBK-9-B
2	DB-6-A	DB-9-J	PX-8-B	DB-9-B	PX-10	DBKG-8	Δ	
	.64 (16.3)	DB-9-D				DBKG-8	Δ	
		DB-9-V				DBKG-10	Δ	
		DB-9-C				DBKG-10	PX-8-CS	
3	DB-11-A	DB-11-O	PX-11-CS	DB-11-B	PX-11	DBKG-12	PX-11-CS	DBK-11-B
	.75 (19.1)	DB-11-C				DBKG-12		
5	DB-25-M	DB-14-H	PX-14-CS	DB-14-B	PX-14	DBKG-14	Δ	DBK-14-B
	.81 (20.6)	DB-14-C				DBKG-16	PX-14-CS	
		DB-11-E				DBKG-8	DBK-11-W	
		DB-11-D				DBKG-8	DBK-11-W	
3	DB-33-A	DB-11-R	PX-11-CS	DB-11-B	PX-11	DBKG-10	DBK-11-W	DBK-11-B
	.75 (19.1)	DB-11-K				DBKG-10	DBK-11-W	
		DB-11-O				DBKG-12	PX-11-CS	
		DB-11-C				DBKG-12	PX-11-CS	
		DB-14-K				DBKG-14	Δ	
5	DB-14-A	DB-14-H	PX-14-CS	DB-14-B	PX-14	DBKG-14	Δ	DBK-14-B
	1.03 (26.2)	DB-14-L				DBKG-16	PX-14-CS	
		DB-14-C				DBKG-16	PX-14-CS	

Δ Not required

DBZM GROUP

Strain relief connectors for flexible cord and cable

LISTED
File No. E3509

CERTIFIED
File No. LR-64107

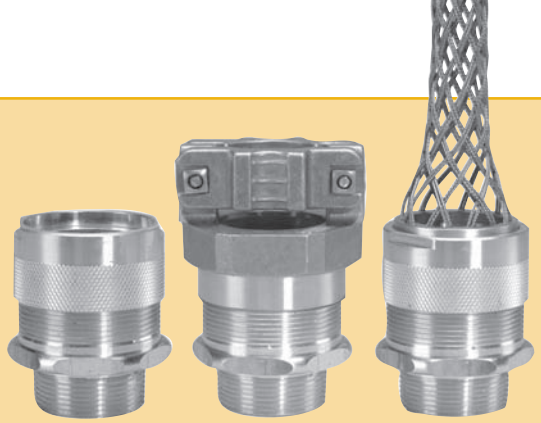

Large straight body, male thread

Aluminum body and compression nut with washer and single hole oil-resistant grommet

Large body DBZ connectors can be employed in retrofit or new installations. Versatility allows use in panelboards and in threaded hubs. Component parts are available separately.

Suitable for use in hazardous locations per National Electric Code Class I, Div. 2; Class II, Div. 1 & 2; Class III, Div. 1&2.

CONDUIT HUB SIZE	PANEL HOLE SIZE	CORD DIAMETER RANGE IN (MM)	COMPLETE ASSEMBLY PART NUMBERS		
			WITH COMPRESSION NUT	WITH MECHANICAL NUT	WITH WOVEN GRIP
1 1/4"	1 3/4"	.750- .875 (19.1-22.2)	DBZM-4714	DBZM-4714-M	DBZM-4714-K
		.875-1.000 (22.2-25.4)	DBZM-4716	DBZM-4716-M	DBZM-4716-K
		1.000-1.125 (25.4-28.6)	DBZM-4718	DBZM-4718-M	DBZM-4718-K
		1.125-1.250 (28.6-31.8)	DBZM-4720	DBZM-4720-M	DBZM-4720-K
		*1.250-1.375 (31.8-34.9)	DBZM-4722	DBZM-4722-M	DBZM-4722-K
1 1/2"	2"	.750- .875 (19.1-22.2)	DBZM-5714	DBZM-5714-M	DBZM-5714-K
		.875-1.000 (22.2-25.4)	DBZM-5716	DBZM-5716-M	DBZM-5716-K
		1.000-1.125 (25.4-28.6)	DBZM-5718	DBZM-5718-M	DBZM-5718-K
		1.125-1.250 (28.6-31.8)	DBZM-5720	DBZM-5720-M	DBZM-5720-K
		1.250-1.375 (31.8-34.9)	DBZM-5722	DBZM-5722-M	DBZM-5722-K
		1.375-1.500 (34.9-38.1)	DBZM-5824	DBZM-5824-M	DBZM-5824-K
		*1.500-1.625 (38.1-41.3)	DBZM-5826	DBZM-5826-M	DBZM-5826-K
		*1.625-1.750 (41.3-44.5)	DBZM-5828	DBZM-5828-M	DBZM-5828-K
		*1.750-1.875 (44.5-47.6)	DBZM-5830	DBZM-5830-M	DBZM-5830-K
2"	2 1/2"	1.250-1.375 (31.8-34.9)	DBZM-6822	DBZM-6822-M	DBZM-6822-K
		1.375-1.500 (34.9-38.1)	DBZM-6824	DBZM-6824-M	DBZM-6824-K
		1.500-1.625 (38.1-41.3)	DBZM-6826	DBZM-6826-M	DBZM-6826-K
		1.625-1.750 (41.3-44.5)	DBZM-6828	DBZM-6828-M	DBZM-6824-K
		1.750-1.875 (44.5-47.6)	DBZM-6830	DBZM-6830-M	DBZM-6830-K
2 1/2"	3"	1.875-2.000 (47.6-50.8)	DBZM-7932	DBZM-7932-M	DBZM-7932-K
		2.000-2.125 (50.8-54.0)	DBZM-7934	DBZM-7934-M	DBZM-7934-K
		2.125-2.250 (54.0-57.2)	DBZM-7936	DBZM-7936-M	DBZM-7936-K
		2.250-2.375 (57.2-60.3)	DBZM-7938	DBZM-7938-M	DBZM-7938-K
3"	3 5/8"	1.875-2.000 (47.6-50.8)	DBZM-8932	DBZM-8932-M	DBZM-8932-K
		2.000-2.125 (50.8-54.0)	DBZM-8934	DBZM-8934-M	DBZM-8934-K
		2.125-2.250 (54.0-57.2)	DBZM-8936	DBZM-8936-M	DBZM-8936-K
		2.250-2.375 (57.2-60.3)	DBZM-8938	DBZM-8938-M	DBZM-8938-K

*Maximum cord size will not pass through body without removing outer jacket.
Other grommets both single and multi-hole are available–see page 70.

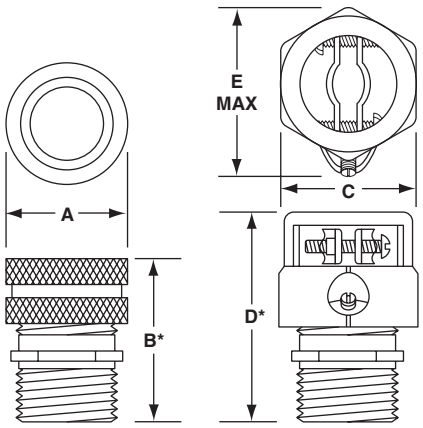

DB/DBM, FORMS 1, 2, 3, 5

FORM SIZE	BODY BORE–IN (MM)	GROMMET	PLAIN WASHER	COMPRESSION NUT	MECHANICAL NUT	WOVEN GRIP	WOVEN GRIP WASHER	WOVEN GRIP NUT
		DBZ-714	DBZ-716-W			DBKG-14	LZW-9316-16A	
		DBZ-716	DBZ-716-W			DBKG-16	LZW-9316-16A	
7-Z	DBZ-47-M	DBZ-718	DBZ-720-W	DBZ-7-B	DBZ-7-B	DBKG-18	LZW-9316-20A	DBZ-7-B
	1.31 (33.2)	DBZ-720	DBZ-720-W			DBKG-20	LZW-9316-20A	
		DBZ-722	DBZ-723-W			DBKG-22	Δ	
		DBZ-714	DBZ-716-W			DBKG-14	LZW-9316-16A	
		DBZ-716	DBZ-716-W			DBKG-16	LZW-9316-16A	
7-Z	DBZ-57-M	DBZ-718	DBZ-720-W	DBZ-7-B	DBZ-7-M	DBKG-18	LZW-9316-20A	DBZ-7-B
	1.44 (36.6)	DBZ-720	DBZ-720-W			DBKG-20	LZW-9316-20A	
		DBZ-722	DBZ-723-W			DBKG-22	Δ	
		DBZ-824	DBZ-824-W			DBKG-26	Δ	
8-Z	DBZ-58-M	DBZ-826	DBZ-826-W	DBZ-8-B	DBZ-8-M	DBKG-26	Δ	DBZ-8-B
	1.56 (39.7)	DBZ-828	DBZ-828-W			DBKG-28	Δ	
		DBZ-830	DBZ-831-W			DBKG-28	Δ	
		DBZ-822	DBZ-824-W			DBKG-22	LZW-9320-22A	
		DBZ-824	DBZ-824-W			DBKG-26	Δ	
8-Z	DBZ-68-M	DBZ-826	DBZ-828-W	DBZ-8-B	DBZ-8-M	DBKG-26	Δ	DBZ-8-B
	1.94 (49.2)	DBZ-828	DBZ-828-W			DBKG-28	Δ	
		DBZ-830	DBZ-831-W			DBKG-28	Δ	
		DBZ-932	DBZ-932-W			DBKG-34	Δ	
9-Z	DBZ-79-M	DBZ-934	DBZ-936-W	DBZ-9-B	DBZ-9-M	DBKG-34	Δ	DBZ-9-B
	2.44 (62.0)	DBZ-936	DBZ-936-W			DKGZ-38	Δ	
		DBZ-938	DBZ-939-W			DBKG-38	Δ	
		DBZ-932	DBZ-932-W			DBKG-34	Δ	
9-Z	DBZ-89-M	DBZ-934	DBZ-936-W	DBZ-9-B	DBZ-9-M	DBKG-34	Δ	DBZ-9-B
	2.44 (62.0)	DBZ-936	DBZ-936-W			DBKG-38	Δ	
		DBZ-938	DBZ-939-W			DBKG-38	Δ	

Δ Not required

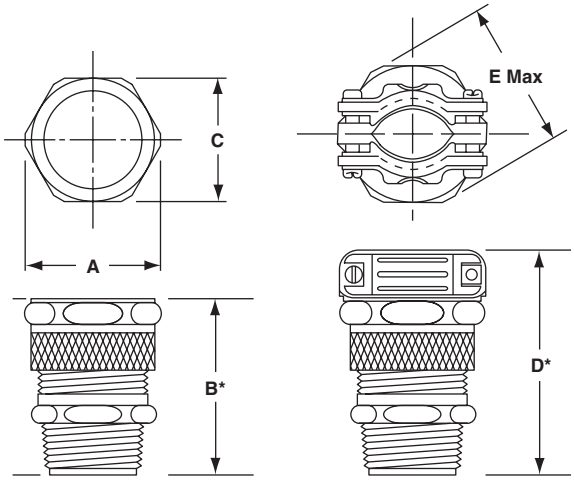

DBZ, FORMS 7-Z, 8-Z, 9-Z

DIMENSIONS	FORM SIZE 1	2	3	5	7-Z	8-Z	9-Z
A	.88	1.13	1.25	1.63	2.23	2.53	3.28
B *	1.53	1.84	2.06	2.69	3.22	3.22	3.91
C ACROSS FLATS	–	1.38	1.38	1.75	2.00	2.50	3.00
D *	–	2.49	2.69	3.50	4.02	4.43	4.88
E MAX	–	1.66	1.66	2.069	2.78	3.46	4.10

*With nut snug, grommet not compressed.

DBL/DBZL GROUP

Strain-relief connectors for flexible cord and cable

LISTED
File No. E53509

CERTIFIED
File No. LR-64107

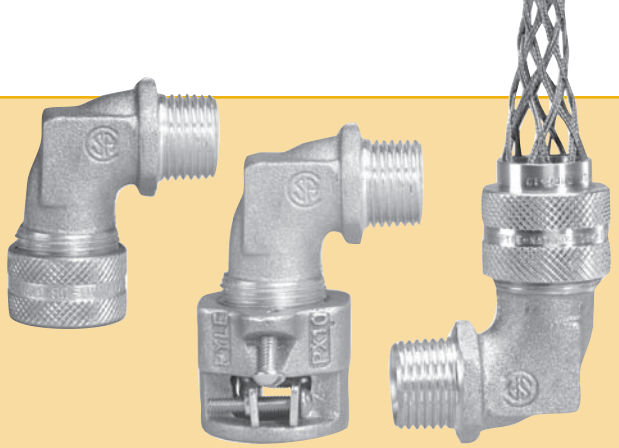

90° elbow body, male thread

Ferrous alloy body, aluminum compression nut with washer and single hole oil-resistant grommet

These 90° connectors allow the installation of cord and cable even in tight quarters. Rugged ferrous alloy body and aluminum compression nut assure long life in abusive situations.

Suitable for use in hazardous locations per National Electric Code Class I, Div. 2; Class II, Div. 1 & 2; Class III, Div. 1&2.

Insulated throat option:

Add suffix "T" to complete assembly part numbers for ½"-1" only.

E.g.:DBL-3514-MT.

CONDUIT HUB SIZE	PANEL HOLE SIZE	CORD DIAMETER RANGE IN (MM)	COMPLETE ASSEMBLY PART NUMBERS WITH COMPRESSION NUT	WITH MECHANICAL NUT	WITH WOVEN GRIP
1/2"	7/8"	.125-.250 (3.17-6.35)	DB-790	DBL-1204-M	. . . . .
		.187-.312 (4.75-7.92)	DB-9590	DBL-1205-M	DBKL-1205
		.250-.375 (6.35-9.52)	DB-890	DBL-1206-M	DBKL-1206
		.312-.437 (7.92-11.1)	DB-9790	DBL-1207-M	DBKL-1207
		.375-.500 (9.52-12.7)	DB-990	DBL-1208-M	DBKL-1208
		* .437-.562 (11.1-14.3)	DB-9990	DBL-1209-M	DBKL-1209
		* .500-.625 (12.7-15.9)	DB-1090	DBL-1210-M	DBKL-1210
3/4"	1 1/8"	.312-.375 (7.92-9.52)	DB-113890	DBL-2306-M	DBKL-2306
		.375-.437 (9.52-11.1)	DB-1171690	DBL-2307-M	DBKL-2307
		.437-.500 (11.1-12.7)	DB-111290	DBL-2308-M	DBKL-2308
		.500-.562 (12.7-14.3)	DB-1191690	DBL-2309-M	DBKL-2309
		.562-.625 (14.3-15.9)	DB-115890	DBL-2310-M	DBKL-2310
		.625-.687 (15.9-17.4)	DB-11111690	DBL-2311-M	DBKL-2311
		* .687-.750 (17.4-19.1)	DB-1190	DBL-2312-M	DBKL-2312
1"	1 3/8"	.687-.812 (17.4-20.6)	DB-141390	DBL-3513-M	DBKL-3513
		.750-.875 (19.1-22.2)	DB-147890	DBL-3514-M	DBKL-3514
		.812-.937 (20.6-23.8)	DB-14151690	DBL-3515-M	DBKL-3515
		* .875-1.000 (22.2-25.4)	DB-1490	DBL-3516-M	DBKL-3516
1 1/4"	1 3/4"	.750-.875 (19.1-22.2)	DBZL-4714	DBZL-4714-M	DBZL-4714-K
		.875-1.000 (22.2-25.4)	DBZL-4716	DBZL-4716-M	DBZL-4716-K
		1.000-1.125 (25.4-28.6)	DBZL-4718	DBZL-4718-M	DBZL-4718-K
		1.125-1.250 (28.6-31.8)	DBZL-4720	DBZL-4720-M	DBZL-4720-K
		*1.250-1.375 (31.8-34.9)	DBZL-4722	DBZL-4722-M	DBZL-4722-K
1 1/2"	2"	*1.375-1.500 (34.9-38.1)	DBZL-5824	DBZL-5824-M	DBZL-5824-K
		*1.500-1.625 (38.1-41.3)	DBZL-5826	DBZL-5826-M	DBZL-5826-K
		*1.625-1.750 (41.3-44.5)	DBZL-5828	DBZL-5828-M	DBZL-5828-K
		*1.750-1.875 (44.5-47.6)	DBZL-5830	DBZL-5830-M	DBZL-5830-K
2"	2 1/2"	*1.375-1.500 (34.9-38.1)	DBZL-6824	DBZL-6824-M	DBZL-6824-K
		*1.500-1.625 (38.1-14.3)	DBZL-6826	DBZL-6826-M	DBZL-6826-K
		*1.625-1.875 (44.5-47.6)	DBZL-6828	DBZL-6828-M	DBZL-6828-K
		*1.750-1.875 (44.5-47.6)	DBZL-6830	DBZL-6830-M	DBZL-6830-K

*Maximum cord size will not pass through body without removing outer jacket. Other grommets both single and multi-hole are available–see page 70.

DBL, FORMS 2, 3, 5

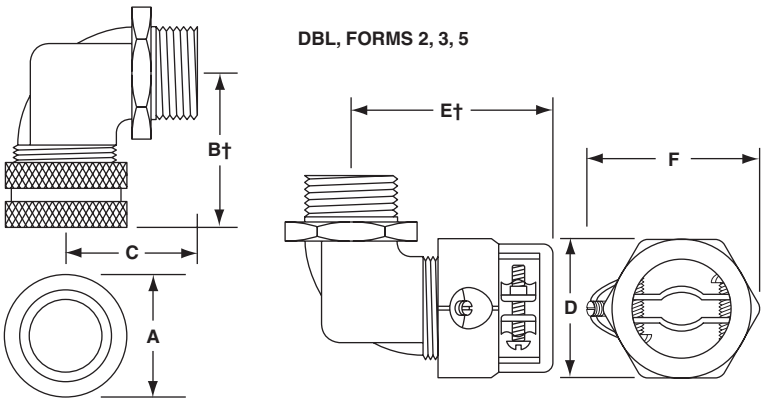

DBLZ, FORMS 7-Z, 8-Z

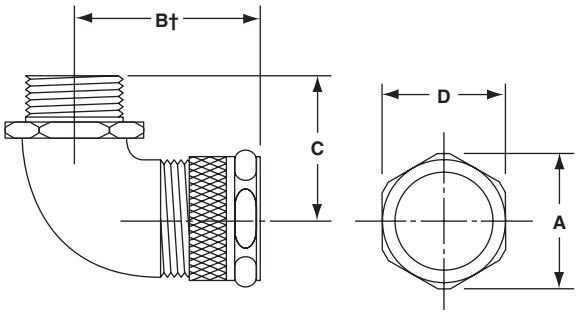

FORM SIZE	BODY BORE–IN (MM)	GROMMET	PLAIN WASHER	COMPRESSION NUT	MECHANICAL NUT	WOVEN GRIP	WOVEN GRIP WASHER	WOVEN GRIP NUT
		DB-9-F				. . . . .	. . . . .	
		DB-9-V				DBKG-5	Δ	
		DB-9-E				DBKG-6	Δ	
2	DB-990-A	DB-9-J	PX-8-CS	DB-9-B	PX-10	DBKG-8	Δ	DBK-9-B
	.56 (14.3)	DB-9-D				DBKG-8	Δ	
		DB-9-U				DBKG-10	Δ	
		DB-9-C				DBKG-10	PX-8-CS	
		DB-11-V				DBKG-6	DBK-11-W	
		DB-11-E				DBKG-8	DBK-11-W	
		DB-11-D				DBKG-8	DBK-11-W	
3	DB-1190-A	DB-11-R	PX-11-CS	DB-11-B	PX-11	DBKG-10	DBK-11-W	DBK-11-B
	.75 (19.1)	DB-11-K				DBKG-10	DBK-11-W	
		DB-11-O				DBKG-12	PX-11-C	
		DB-11-C				DBKG-12	PX-11-C	
		DB-14K				DBKG-14	Δ	
5	DB-1490-A	DB-14-H	PX-14-CS	DB-14-B	PX-14	DBKG-14	Δ	DBK-14-B
	1.03 (26.2)	DB-14-L				DBKG-16	PX-14-CS	
		DB-14-C				DBKG-16	PX-14-CS	
		DBZ-714	DBZ-716-W			DBKG-14	LZW-9316-16A	
		DBZ-716	DBZ-716-W			DBKG-16	LZW-9316-16A	
7-Z	DBZ-47-L	DBZ-718	DBZ-720-W	DBZ-7-B	DBZ-7-M	DBKG-18	LZW-9316-20A	DBZ-7-B
	1.25 (31.8)	DBZ-720	DBZ-720-W			DBKG-20	LZW-9316-20A	
		DBZ-722	DBZ-723-W			DBKG-22	Δ	
		DBZ-824	DBZ-824-W			DBKG-26	Δ	
8-Z	DBZ-58-L	DBZ-826	DBZ-828-W	DBZ-8-B	DBZ-8-M	DBKG-26	Δ	DBZ-8-B
	1.44 (36.6)	DBZ-828	DBZ-828-W			DBKG-28	Δ	
		DBZ-830	DBZ-831-W			DBKG-28	Δ	
		DBZ-824	DBZ-824-W			DBKG-26	Δ	
8-Z	DBZ-68-L	DBZ-826	DBZ-828-W	DBZ-8-B	DBZ-8-M	DBKG-26	Δ	DBZ-8-B
	1.88 (47.7)	DBZ-828	DBZ-828-W			DBKG-28	Δ	
		DBZ-830	DBZ-831-W			DBKG-28	Δ	

Δ Not required

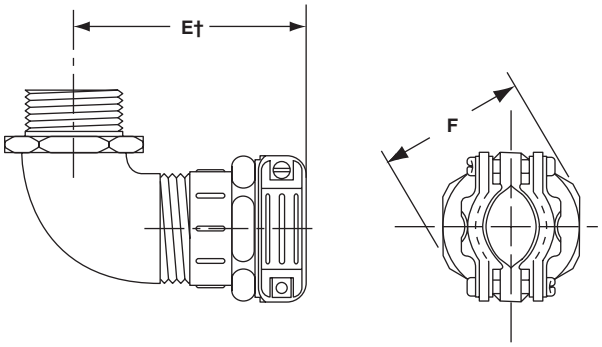

DIMENSIONS	FORM SIZE 2	3	5	7-Z	8-Z
A	1.13	1.25	1.63	2.23	2.53
B†	1.88	1.86	2.94	3.28	3.78
C	1.44	1.56	2.00	2.38	2.88
D ACROSS FLATS	1.38	1.38	1.75	2.00	2.50
E†	2.53	2.51	3.75	4.12	4.69
F MAX	1.66	1.66	2.06	2.78	3.46

† With nut snug, grommet not compressed.

DBA GROUP

Strain relief connectors for flexible cord and cable

LISTED
File No. E53509

CERTIFIED
File No. LR-64107

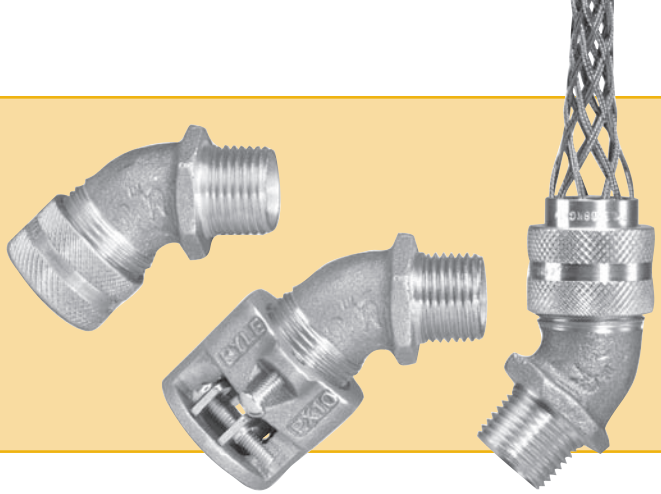

45° elbow body, male thread

Ferrous alloy body, aluminum compression nut with washer and single hole oil-resistant grommet

Customize your installation with our 45° DBA connectors. Like the DBL, the steel body and aluminum compression nut will provide many years of trouble free service.

Insulated throat option:

Add suffix "T" to all complete assembly part numbers on this page.

E.g.:DBKA-3513-T.

CONDUIT HUB SIZE	PANEL HOLE SIZE	CORD DIAMETER RANGE IN (MM)	COMPLETE ASSEMBLY PART NUMBERS		
			WITH COMPRESSION NUT	WITH MECHANICAL NUT	WITH WOVEN GRIP
1/2"	7/8"	.125-.250 (3.17-6.35)	DB-745	DBA-1204-M	. . . . .
		.187-.312 (4.75-7.92)	DB-9545	DBA-1205-M	DBKA-1205
		.250-.375 (6.35-9.52)	DB-845	DBA-1206-M	DBKA-1206
		.312-.437 (7.92-11.1)	DB-9745	DBA-1207-M	DBKA-1207
		.375-.500 (9.52-12.7)	DB-945	DBA-1208-M	DBKA-1208
		* .437-.562 (11.1-14.3)	DB-9945	DBA-1209-M	DBKA-1209
		*.500-.625 (12.7-15.9)	DB-1045	DBA-1210-M	DBKA-1210
3/4"	1 1/8"	.312-.375 (7.92-9.52)	DB-113845	DBA-2306-M	DBKA-2306
		.375-.437 (9.52-11.1)	DB-1171645	DBA-2307	DBKA-2307
		.437-.500 (11.1-12.7)	DB-111245	DBA-2308-M	DBKA-2308
		.500-.562 (12.7-14.3)	DB-1191645	DBA-2309-M	DBKA-2309
		.562-.625 (14.3-15.9)	DB-15845	DBA-2310-M	DBKA-2310
		.625-.687 (15.9-17.4)	DB-11111645	DBA-2311-M	DBKA-2311
		*.687-.750 (17.4-19.1)	DB-1145	DBA-2312-M	DBKA-2312
1"	1 3/8"	.687-.812 (17.4-14.2)	DB-141345	DBA-3513-M	DBKA-3513
		.750-.875 (19.1-22.2)	DB-147845	DBA-3514-M	DBKA-3514
		.812-.937 (14.2-23.8)	DB-14151645	DBA-3515-M	DBKA-3515
		*.875-1.000 (22.2-25.4)	DB-1445	DBA-3516-M	DBKA-3516

*Maximum cord size will not pass through body without removing outer jacket. Other grommets both single and multi-hole are available–see page 70.

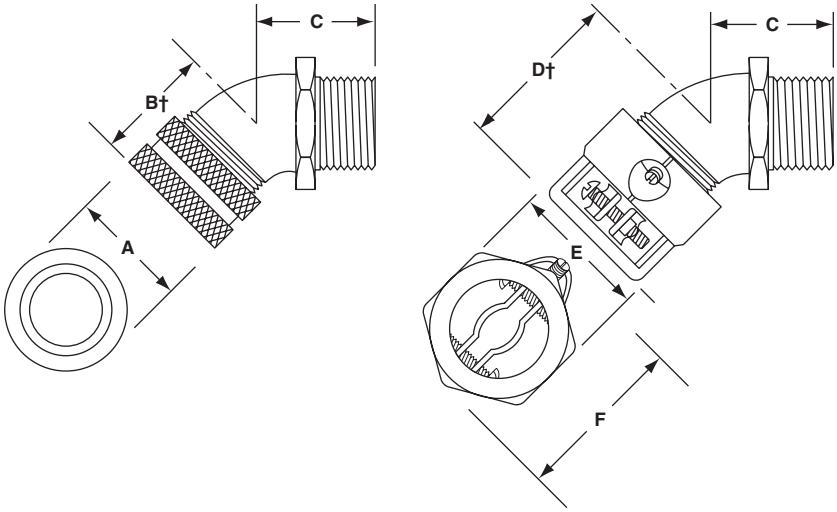

DIMENSIONS	FORM SIZE 2	3	5
A	1.13	1.25	1.63
B†	1.31	1.56	2.31
C	1.31	1.38	1.44
D†	1.96	2.21	3.12
E ACROSS FLATS	1.38	1.38	1.75
F MAX	1.66	1.66	2.06

†With nut snug, grommet not compressed

	FORM SIZE	BODY BORE–IN (MM)	GROMMET	PLAIN WASHER	COMPRESSION NUT	MECHANICAL NUT	WOVEN GRIP	WOVEN GRIP WASHER	WOVEN GRIP NUT
			DB-9-F				. . . . .	. . . . .	
			DB-9-V				DBKG-5	Δ	
			DB-9-E				DBKG-6	Δ	
	2	DB-945-A	DB-9-J	PX-8-CS	DB-9-B	PX-10	DBKG-8	Δ	DBK-9-B
		.56 (14.3)	DB-9-D				DBKG-8	Δ	
			DB-9-U				DBKG-10	Δ	
			DB-9-C				DBKG-10	PX-8-C	
			DB-11-V				DBKG-6	DBK-11-W	
			DB-11-E				DBKG-8	DBK-11-W	
			DB-11-D				DBKG-8	DBK-11-W	
	3	DB-1145-A	DB-11-R	PX-11-CS	DB-11-B	PX-11	DBKG-10	DBK-11-W	DBK-11-B
		.75 (19.1)	DB-11-K				DBKG-10	DBK-11-W	
			DB-11-O				DBKG-12	PX-11-CS	
			DB-11-C				DBKG-12	PX-11-CS	
			DB-14-K				DBKG-14	Δ	
	5	DB-1445-A	DB-14-H	PX-14-CS	DB-14-B	PX-14	DBKG-14	Δ	DBK-14-B
		1.03 (26.2)	DB-14-L				DBKG-16	PX-14-CS	
			DB-14-C				DBKG-16	PX-14-CS	

Δ Not required

DBF GROUP

Strain-relief connectors for flexible cord and cable

LISTED
File No. E53509

CERTIFIED
File No. LR-64107

Straight body, female thread

Aluminum body and compression nut with single hole oil-resistant grommet

For panelboard and bulkhead installations, as well as for drop cords and cables from overhead power sources. Also for mounting to existing threaded conduit and to conduit nipples.

CONDUIT HUB SIZE	PANEL HOLE SIZE	CORD DIAMETER RANGE IN (MM)	COMPLETE ASSEMBLY PART NUMBERS WITH COMPRESSION NUT	WITH MECHANICAL NUT	WITH WOVEN GRIP
3/8"	11/16"	.125-.187 (3.17-4.75)	DBF--4316	. . . . .	. . . . .
		.187-.250 (4.75-6.35)	DBF-414	. . . . .	. . . . .
		.250-.312 (6.35-7.92)	DBF-4516	. . . . .	. . . . .
		.312-.375 (7.92-7.52)	DBF-438	. . . . .	. . . . .
		.375-.437 (9.52-11.1)	DBF-4	. . . . .	. . . . .
1/2"	7/8"	.125-.187 (3.17-4.75)	DBF-3316		
		.187-.250 (4.75-6.35)	DBF-314		
		.250-.312 (6.35-7.92)	DBF-3516	Use Form 2	Use Form 2
		.312-.375 (7.92-9.52)	DBF-338		
		.375-.437 (9.52-11.1)	DBF-3		
		.125-.250 (3.17-6.35)	DBF-7	DBF-1204-M	. . . . .
		.187-.312 (4.75-7.92)	DBF-9516	DBF-1205-M	DBKF-1205
		.250-.375 (6.35-9.52)	DBF-8	DBF-1206-M	DBKF-1206
		.312-.437 (7.92-11.1)	DBF-9716	DBF-1207-M	DBKF-1207
		.375-.500 (9.52-12.7)	DBF-9	DBF-1208-M	DBKF-1208
		.437-.562 (11.1-14.3)	DBF-9916	DBF-1209-M	DBKF-1209
		.500-.625 (12.7-15.9)	DBF-10	DBF-1210-M	DBKF-1210
3/4"	1 1/8"	.125-.250 (3.17-6.35)	DBF-614	DBF-2204-M	. . . . .
		.187-.312 (4.75-7.92)	DBF-6516	DBF-2205-M	DBKF-2205
		.250-.375 (6.35-9.52)	DBF-638	DBF-2206-M	DBKF-2206
		.312-.437 (7.92-11.1)	DBF-6716	DBF-2207-M	DBKF-2207
		.375-.500 (9.52-12.7)	DBF-612	DBF-2208-M	DBKF-2208
		.437-.562 (11.1-14.3)	DBF-6916	DBF-2209-M	DBKF-2209
		.500-.625 (12.7-25.4)	DBF-6	DBF-2210-M	DBKF-2210
		.625-.687 (15.9-17.4)	DBF-111116	DBF-2311-M	DBKF-2311
		.687-.750 (17.4-19.1)	DBF-11	DBF-2312-M	DBKF-2312
1"	1 3/8"	.687-.812 (17.4-20.6)	DBF-1413	DBF-3513-M	DBKF-3513
		.750-.875 (19.1-22.2)	DBF-1478	DBF-3514-M	DBKF-3514
		.812-.937 (20.6-23.8)	DBF-141516	DBF-3515-M	DBKF-3515
		.875-.937 (22.2-25.4)	DBF-14	DBF-3516-M	DBKF-3516

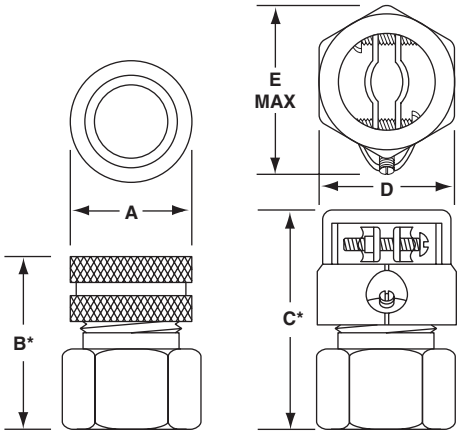

DIMENSIONS	FORM SIZE 1	2	3	5
A	.88	1.13	1.25	1.63
B†	1.53	1.84	2.05	2.59
C†	–	2.49	2.70	3.40
D	–	1.38	1.38	1.75
E MAX	–	1.66	1.66	2.06

†With nut snug, grommet not compressed.

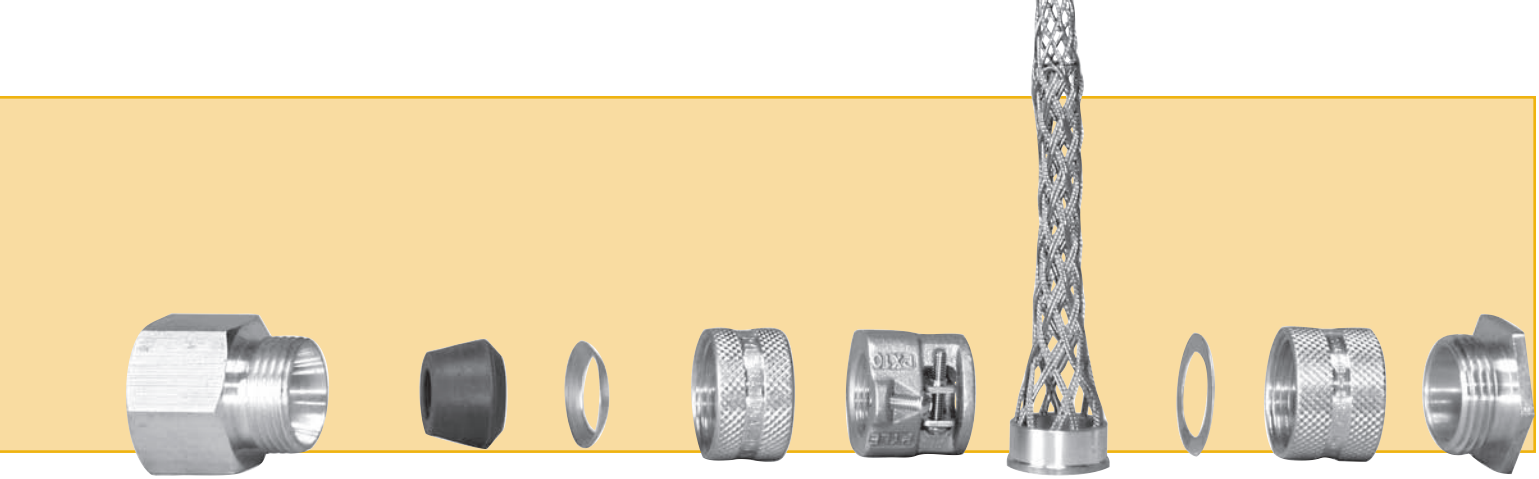

FORM SIZE	BODY BORE–IN (MM)	GROMMET	PLAIN WASHER	COMPRESSION NUT	MECHANICAL NUT	WOVEN GRIP	WOVEN GRIP WASHER	WOVEN GRIP NUT	FLARED NIPPLE*
		DB-4-F			. . . . .	. . . . .	. . . . .	. . . . .	
		DB-4-J			. . . . .	. . . . .	. . . . .	. . . . .	
1	DBF-4-A	DB-4-D	PX-4-CS	DB-4-B	. . . . .	. . . . .	. . . . .	. . . . .	DH-38
	.440 (11.2)	DB-4-E			. . . . .	. . . . .	. . . . .	. . . . .	
		DB-4-C			. . . . .	. . . . .	. . . . .	. . . . .	
		DB-4-F			. . . . .	. . . . .	. . . . .	. . . . .	
		DB-4-J			. . . . .	. . . . .	. . . . .	. . . . .	
1	DBF-3-A	DB-4-D	PX-4-CS	DB-4-B	. . . . .	. . . . .	. . . . .	. . . . .	DH-1
	.440 (11.2)	DB-4-E			. . . . .	. . . . .	. . . . .	. . . . .	
		DB-4-C			. . . . .	. . . . .	. . . . .	. . . . .	
		DB-9-F				. . . . .	. . . . .		
		DB-9-V				DBKG-5	Δ		
		DB-9-E				DBKG-6	Δ		
2	DBF-9-A	DB-9-J	PS-8-CS	DB-9-B	PX-10	DBKG-8	Δ	DBK-9-B	DH-1
	.620 (15.7)	DB-9-D				DBKG-8	Δ		
		DB-9-V				DBKG-10	Δ		
		DB-9-C				DBKG-10	PX-8-CS		
		DB-9-F				. . . . .	. . . . .	. . . . .	
		DB-9-V				DBKG-5	Δ		
		DB-9-E				DBKG-6	Δ		
2	DBF-6-A	DB-9-J	PX-8-CS	DB-9-B	PX-10	DBKG-8	Δ	DBK-9-B	DH-2
	.620 (15.7)	DB-9-D				DBKG-8	Δ		
		DB-9-V				DBKG-10	Δ		
		DB-9-C				DBKG-10	PX-8-CS		
3	DBA-11-A	DB-11-O	PX-11-CS	DB-11-B	PX-11	DBKG-12	PX-11-CS	DBK-11-B	DH-2
	.750 (19.1)	DB-11-C				DBKG-12	PX-11-CS		
		DB-14-K				DBKF-14	Δ		
5	DBF-14-A	DB-14-H	PX-14-CS	DB-14-B	PX-14	DBKG-14	Δ	DBK-14-B	DH-3
	1.030 (26.2)	DB-14-L				DBKG-16	PX-14-CS		
		DB-14-C				DBKFG-16	PX-14-CS		

***FLARED NIPPLE**

Used for mounting type DBF connectors on sheet metal boxes and cabinets, and for drop cords/cables from overhead power distribution ducts.

Flared Nipple not included unless specially ordered. To include flared nipple with assembly change catalog numbers as follows:

- with compression nut, change DBF to DHF
- with mechanical nut, change DBF to DBH
- with weave grip, change DBKF to DBKH

HUB SIZE	MAX. PANEL THICKNESS	PART NO.	DIMENSIONS A	B	C	D	E	F
3/8”	1/8”	**DH-38**	.86	.44	.33	.12	.09	.69
1/2”	3/16”	**DH-1**	1.00	.56	.44	.12	.12	.86
3/4”	3/16”	**DH-2**	1.25	.80	.44	.12	.12	1.09
1”	1/4”	**DH-3**	1.50	1.00	.56	.19	.16	1.36

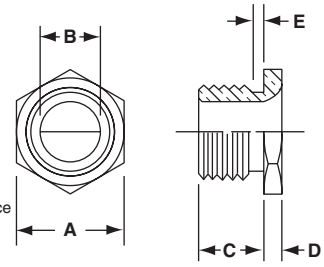

F – Recommended minimum clearance (Standard knockouts satisfactory).

DBZP GROUP

Strain-relief panelboard and bulkhead connector

Straight body, male thread

aluminum body and compression nut with washer, gasket, and single hole oil-resistant grommet

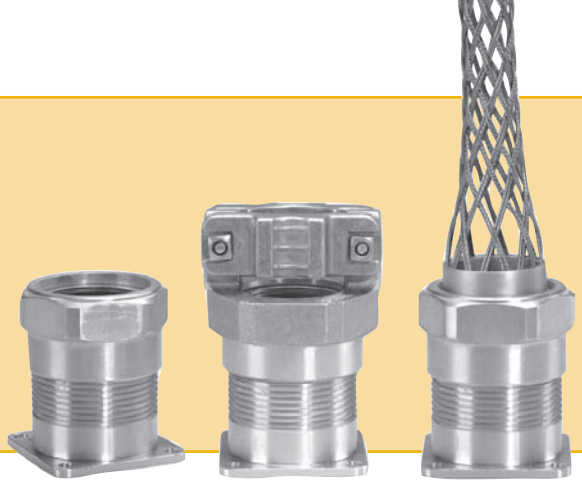

These bulkhead mounting cord connectors have an oil-resistant rubber gasket furnished with each body which permits mounting from either the front or the back of panels and bulkheads.

Where 45° angle mounting is required, choose adapters listed on page 72.

As with the other DB Series grips, the DBZP provides effective strain-relief and is liquid-tight through the assembled unit.

CONDUIT HUB SIZE	CORD DIAMETER RANGE IN (MM)	COMPLETE ASSEMBLY PART NUMBERS		
		WITH COMPRESSION NUT	WITH MECHANICAL NUT	WITH WOVEN GRIP
$1^3/_8$"*	.062- .125 (1.57-3.17)	DBZP-502	. . . . .	. . . . .
	.125- .250 (3.17-6.35)	DBZP-504	. . . . .	. . . . .
	.250- .375 (6.35-9.52)	DBZP-506	DBZP-506-M	DBZP-506-K
	.375- .500 (9.52-12.7)	DBZP-508	DBZP-508-M	DBZP-508-K
	.500- .625 (12.7-15.9)	DBZP-510	DBZP-510-M	DBZP-510-K
	.625- .750 (15.9-19.1)	DBZP-512	DBZP-512-M	DBZP-512-K
	.750- .875 (19.1-22.2)	DBZP-514	DBZP-514-M	DBZP-514-K
$1^7/_8$"*	.750- .875 (19.1-22.2)	DBZP-714	DBZP-714-M	DBZP-714-K
	.875-1.000 (22.2-25.4)	DBZP-716	DBZP-716-M	DBZP-716-K
	1.000-1.125 (25.4-28.6)	DBZP-718	DBZP-718-M	DBZP-718-K
	1.125-1.250 (28.6-31.8)	DBZP-720	DBZP-720-M	DBZP-720-K
	1.250-1.375 (31.8-34.9)	DBZP-722	DBZP-722-M	DBZP-722-K
$2^3/_8$"*	1.250-1.375 (31.8-34.9)	DBZP-822	DBZP-822-M	DBZP-822-K
	1.375-1.500 (34.9-38.1)	DBZP-824	DBZP-824-M	DBZP-824-K
	1.500-1.625 (38.1-41.3)	DBZP-826	DBZP-836-M	DBZP-836-K
	1.625-1.750 (41.3-44.5)	DBZP-828	DBZP-828-M	DBZP-828-K
	1.750-1.875 (44.5-47.6)	DBZP-830	DBZP-830-M	DBZP-830-K
$2^7/_8$"*	1.750-1.875 (44.5-47.6)	DBZP-930	DBZP-930-M	DBZP-930-K
	1.875-2.000 (47.6-50.8)	DBZP-032	DBZP-932-M	DBZP-932-K
	2.000-2.125 (50.8-54.0)	DBZP-934	DBZP-934-M	DBZP-934-K
	2.125-2.250 (54.0-57.2)	DBZP-936	DBZP-936-M	DBZP-936-K
	2.250-2.375 (57.2-60.3)	DBZP-938	DBZP-938-M	DBZP-938-K
$3^3/_8$"*	2.250-2.375 (57.2-60.3)	DBZP-1038	DBZP-1038-M	DBZP-1038-K
	2.375-2.500 (60.3-63.5)	DBZP-1040	DBZP-1040-M	DBZP-1040-K
	2.500-2.625 (63.5-66.7)	DBZP-1042	DBZP-1042-M	DBZP-1042-K
	2.625-2.7500 (66.7-69.9)	DBZP-1044	DBZP-1044-M	DBZP-1044-K
	2.750-2.875 (69.9-73.0)	DBZP-1046	DBZP-1046-M	DBZP-1046-K

Note: See page 72 for information on Panelboard Adapters & Conduit Fitting Boxes

* Bore hole in panelboard 1/64" larger than dimension "E" for back mounting.

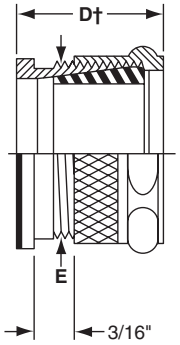

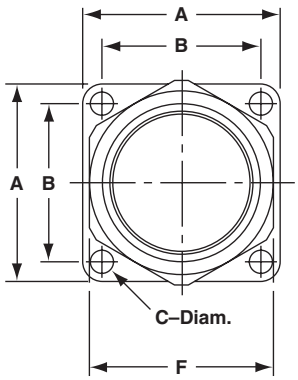

	FORM SIZE				
	5-Z**	7-Z	8-Z	9-Z	10-Z
A	$1^8/_8$"	$2^1/_8$"	$2^5/_8$"	$3^1/_8$"	$3^3/_4$"
B MOUNTING HOLES	$1^1/_4$"	$1^{11}/_{16}$"	$2^3/_{32}$"	$2^{17}/_{32}$"	$3^1/_{32}$"
C	$^3/_{16}$"	$^7/_{32}$"	$^9/_{32}$"	$^{11}/_{32}$"	$^{11}/_{32}$"
MAX MOUNTING SCREW SIZE	#8	#10	$^1/_4$	$^5/_{16}$	$^5/_{16}$
D†	$2^{15}/_{16}$"	$2^{15}/_{32}$"	$2^{15}/_{32}$"	$2^{15}/_{32}$"	$2^{15}/_{32}$"
E	$1^3/_8$"	$1^7/_8$"	$2^3/_8$"	$2^7/_8$"	$3^3/_8$"
F ACROSS FLATS	$1^{21}/_{32}$"	$2^1/_{32}$"	$2^{17}/_{32}$"	$3^1/_{32}$"	$3^{19}/_{32}$"

† With nut snug, buit grommet not compressed.
**No adapter avaliable for from size 5-Z

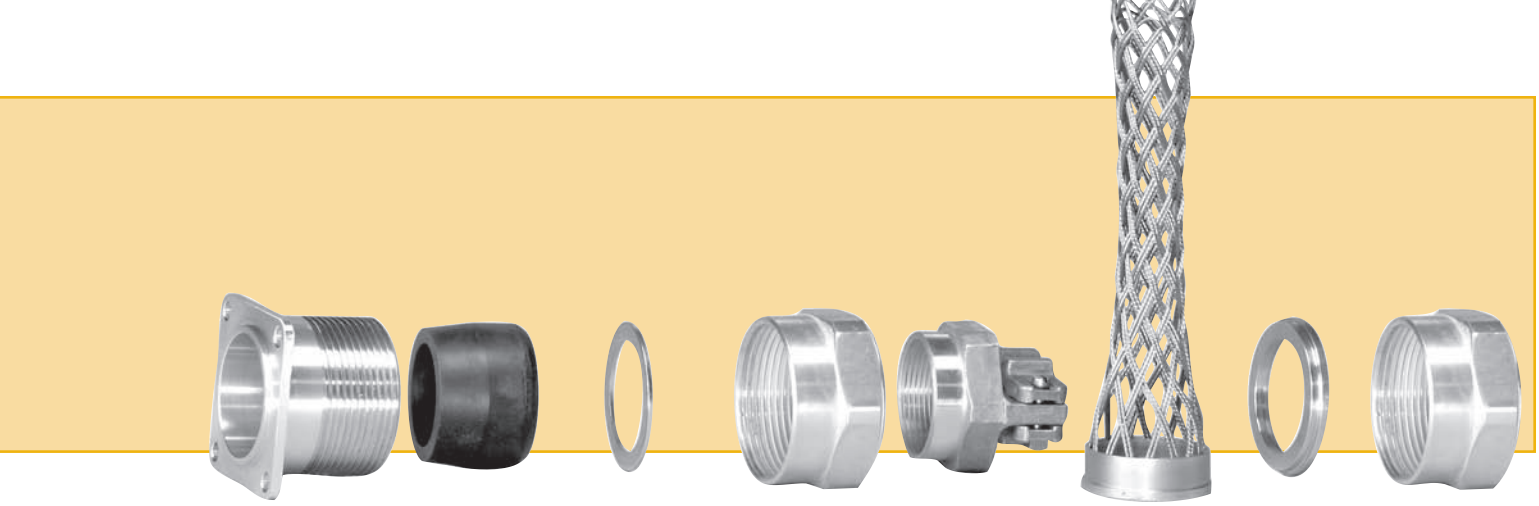

FORM SIZE	BODY BORE–IN (MM)	GROMMET	PLAIN WASHER	COMPRESSION NUT	MECHANICAL NUT	WOVEN GRIP	WOVEN GRIP WASHER	WOVEN GRIP NUT
		DBZ-502	DBZ-504-W		. . . . .	. . . . .	. . . . .	. . . . .
		DBZ-504	DBZ-504-W		. . . . .	. . . . .	. . . . .	. . . . .
		DBZ-506	DBZ-508-W			DBKG-6	LZW-9312-10A	
5-Z	DBZ-5-P	DBZ-508	DBZ-508-W	DBZ-5-B	DBZ-5-M	DBKG-8	LZW-9312-10A	DBZ-5-B
	.937 (23.8)	DBZ-510	DBZ-512-W			DBKG-10	LZW-9312-12A	
		DBZ-512	DBZ-512-W			DBKG-12	LZW-9312-12A	
		DBZ-514	DBZ-515-W			DBKG-14-Z	Δ	
		DBZ-714	DBZ-716-W			DBKG-14	LZW-9316-16A	
		DBZ-716	DBZ-716-W			DBKG-16	LZW-9316-16A	
7-Z	DBZ-7-P	DBZ-718	DBZ-720-W	DBZ-7-M	DBZ-7-M	DBKG-18	LZW-9316-20A	DBZ-7-B
	1.437 (36.5)	DBZ-720	DBZ-720-W			DBKG-20	LZW-9316-20A	
		DBZ-722	DBZ-723-W			DBKG-22	Δ	
		DBZ-822	DBZ-824-W			DBKG-22	LZW-9320-22A	
		DBZ-824	DBZ-824-W			DBKG-26	Δ	
8-Z	DBZ-8-P	DBZ-826	DBZ-828-W	DBZ-8-B	DBZ-8-M	DBKG-26	Δ	DBZ-8-B
	1.937 (49.2)	DBZ-828	DBZ-828-W			DBKG-28	Δ	
		DBZ-830	DBZ-831-W			DBKG-28	Δ	
		DBZ-930	DBZ-932-W			DBKG-28	LZW-9324-28A	
		DBZ-932	DBZ-932-W			DBKG-34	Δ	
9-Z	DBZ-9-P	DBZ-934	DBZ-936-W	DBZ-9-B	DBZ-9-M	DBKG-34	Δ	DBZ-9-B
	2.437 (61.9)	DBZ-936	DBZ-936-W			DBKG-38	Δ	
		DBZ-938	DBZ-939-W			DBKG-38	Δ	
		DBZ-1038	DBZP-1040-W			DBKG-38	LZW-9328-38A	
		DBZ-1040	DBZP-1040-W			DBKG-40-Z	Δ	
10-Z	DBZP-10-P	DBZ-1042	DBZP-1044-W	DBZ-10-B	DBZ-10-M	DBKG-46-Z	Δ	DBZ-10-B
	2.875 (73.0)	DBZ-1044	DBZ-1044-W			DBKG-46-Z	Δ	
		DBZ-1046	DBZ-1046-W			DBKG-46-Z	Δ	

Δ Not required

GROMMETS

for DB/DBZ series connectors

LISTED

CERTIFIED

Molded oil-resistant synthetic rubber

These tapered grommets fit in the tapered bodies of all appropriate DB Series metallic connectors. They provide strain-relief by gripping the cord jacket inside the grommet, and efficiently seal out water and oil from internal connections.

Amphenol®/Pyle® rubber grommets are specially compounded and molded to resist age-hardening, adding many more years to the life of installations.

CABLE RANGE (inches)	FORM1	FORM2	FORM 3	FORM 5	FORM 5Z	FORM 7Z	FORM 8Z	FORM 9Z	FORM 10Z
BLANK	DB-4-Z	DB-9-Z	DB-11-Z						
.062-.125					DBZ-502				
.125-.187	DB-4-F								
.125-.250		DB-9-F			DBZ-504				
.187-.250	DB-4-J								
.187-.312		DB-9-V							
.250-.312	DB-4-D		DB-11-X						
.250-.375		DB-9-E			DBZ-506	DBZ-706			
.312-.375	DB-4-E		DB-11-4						
.312-.437		DB-9-J		DB-14-N					
.375-.437	DB-4-C		DB-11-E						
.375-.500		DB-9-D			DBZ-508	DBZ-708			
.437-.500			DB-11-D						
.437-.562		DB-9-U		DB-14-M					
.500-.562			DB-11-R						
.500-.625		DB-9-C			DBZ-510	DBZ-710	DBZ-810		
.562-.625			DB-11-K						
.562-.687				DB-14-E					
.625-.687			DB-11-O						
.625-.750				DB-14-J	DBZ-512	DBZ-712	DBZ-812		
.687-.750			DB-11-C						
.687-.812				DB-14-K					
.750-.875				DB-14-H	DBZ-514	DBZ-714	DBZ-814		
.812-.937				DB-14-L					
.875-.937					DBZ-515				
.875-1.000				DB-14-C		DBZ-716	DBZ-816	DBZ-916	
1.000-1.125						DBZ-718	DBZ-818	DBZ-918	
1.125-1.250						DBZ-720	DBZ-820	DBZ-920	
1.250-1.375						DBZ-722	DBZ-822	DBZ-922	
1.375-1.437						DBZ-723			
1.375-1.500							DBZ-824	DBZ-924	
1.500-1.625							DBZ-826	DBZ-926	
1.625-1.750							DBZ-828	DBZ-928	
1.750-1.875							DBZ-830	DBZ-930	
1.875-1.937							DBZ-831		
1.875-2.000								DBZ-932	
2.000-2.125								DBZ-934	
2.125-2.250								DBZ-936	
2.250-2.375								DBZ-938	
2.375-2.437								DBZ-939	DBZ-1038
2.375-2.500									DBZ-1040
2.500-2.625									DBZ-1042
2.625-2.750									DBZ-1044
2.750-2.875									DBZ-1046

Multi-hole grommets

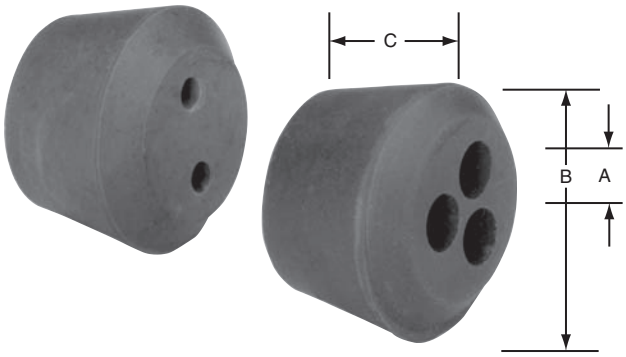

	BODY AND COMPRESSION NUT USED	PART NO.	A NOMINAL SIZE CORD OR CABLE	B	C
	Form 1	**DB-4-H**	.170	21/32	3/8
2 Hole	Form 2	**DB-9-MA**	.100	15/16	5/8
		DB-9-X	.125	15/16	5/8
		DB-9-XA	.156	15/16	5/8
		DB-9-H	.250	15/16	5/8
		DB-9-O	.281	15/16	5/8
	Form 5	**DB-14-D**	.437	1 9/32	1 1/32
3 Hole	Form 2	**DB-9-L**	.218	15/16	5/8
	Form 3	**DB-11-M**	.281	1 1/32	23/32

Cord protecting sleeve/grommet

BODY AND COMPRESSION NUT USED	PART NO.	A NOMINAL SIZE CORD OR CABLE	B O.D.	C OVERALL LENGTH
Form 2	**DBY-9-J**	.312 to .437	15/16	3

Panelboard adapters

Aluminum construction. Accepts DBZP panelboard connectors

All adapter covers come complete with screws and clips for mounting the connector, plus bolts, washers, and gasket for attaching cover to panel or conduit fitting box.

FORM SIZE	PART NUMBER	DIMENSIONS						
		A	B	C	D	E	F	G
7-Z	ZP-C-2516-12	$4^{3}/_{16}$"	$4^{3}/_{16}$"	$3^{9}/_{16}$"	$3^{9}/_{16}$"	$2^{15}/_{16}$"	$^{1}/_{4}$-20 x $^{3}/_{4}$"	$1^{11}/_{16}$"
8-Z	ZP-C-2520-12	$4^{1}/_{2}$"	$4^{1}/_{2}$"	$3^{7}/_{8}$"	$3^{7}/_{8}$"	$3^{39}/_{64}$"	$^{1}/_{4}$-20 x $^{3}/_{4}$"	$2^{3}/_{32}$"
9-Z	ZP-C-2524-12	8"	8"	7"	7"	$3^{33}/_{64}$"	$^{1}/_{2}$-13 x $^{3}/_{4}$"	$2^{17}/_{32}$"
10-Z	ZP-C-2528-12	8"	8"	7"	7"	$3^{5}/_{8}$"	$^{1}/_{2}$-13 x $^{3}/_{4}$"	$3^{1}/_{32}$"

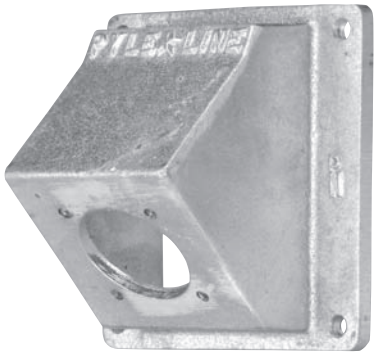

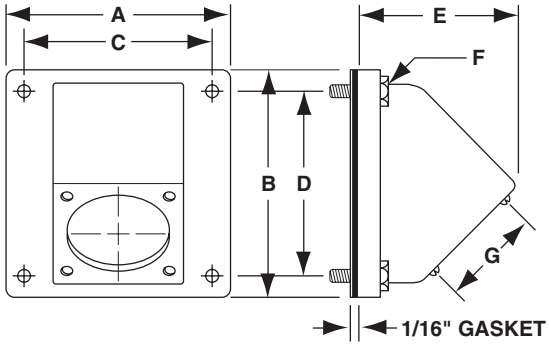

Conduit fitting boxes

Ferrous alloy construction

Conduit fitting box to fit adapters. Mounting hardware is not included. Thru-feed styles available upon request.

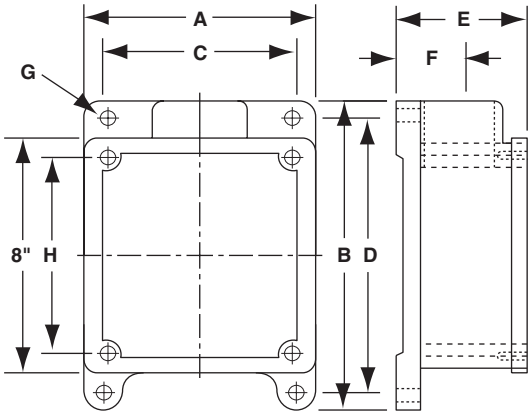

Form sizes 9-Z & 10-Z

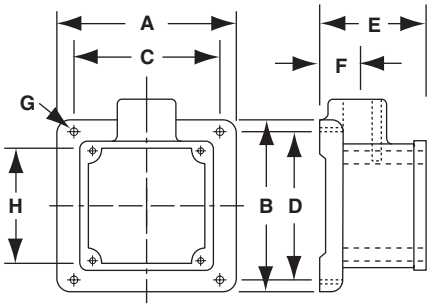

Form sizes 7-Z & 8-Z

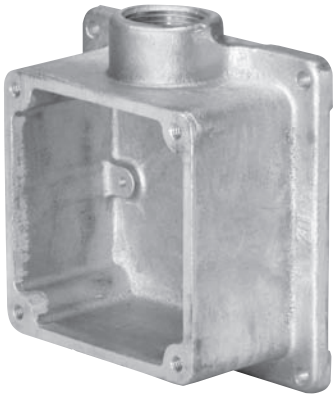

FORM SIZE	CONDUIT HUB SIZE	PART NUMBER	DIMENSIONS							
			A	B	C	D	E	F	G	H
7-Z	$^{3}/_{4}$" 1" $1^{1}/_{4}$" $1^{1}/_{2}$"	P-202760-42 P-202760-43 P-202760-64 P-202760-65	$5^{1}/_{4}$"	$5^{1}/_{4}$"	$4^{5}/_{8}$"	$4^{5}/_{8}$"	$2^{3}/_{8}$"	$^{13}/_{16}$" $^{13}/_{16}$" 1" 1"	$^{9}/_{32}$" DIA.	$3^{9}/_{16}$"
8-Z	$1^{1}/_{4}$" $1^{1}/_{2}$" 2"	JRZ-610064 JRZ-610065 JRZ-610066	6"	6"	$5^{1}/_{4}$"	$5^{1}/_{4}$"	$3^{3}/_{4}$"	$1^{7}/_{16}$"	$^{9}/_{32}$" DIA.	$3^{7}/_{8}$"
9-Z	$2^{1}/_{2}$" 3"	JR-720036-A JRZ-820036-A	8"	$10^{3}/_{4}$"	$6^{3}/_{4}$"	$9^{1}/_{2}$"	$3^{3}/_{4}$" $4^{1}/_{2}$"	$1^{7}/_{8}$" $2^{1}/_{8}$"	$^{7}/_{16}$" DIA.	7"

Cord Grip handles

For use with Star-Line® and other electrical devices that are tapped for conduit and use flexible cord or cable.

These handles not only fit electrical connectors, but will also work well on heavy duty portable equipment.

Both D and T handles are made of cast aluminum and come complete with a locknut on male thread “A.” Hub “B” accepts type DB cord grips with male thread (not included)

Serves also as a convenient means for hanging your plugs, receptacles or portable equipment.

PART NUMBER	“A” MALE THREAD	“B”FEMALE THREAD
PH-2	¾”	¾”
PH-3	1”	1”
PH-5	1½”	1½”
PHA-22	¾”	¾
PHA-33	1”	1”

TYPE PH D-HANDLE

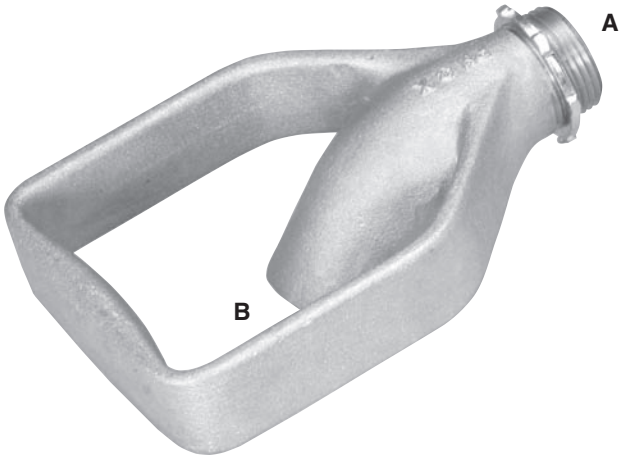

TYPE PHA T-HANDLE

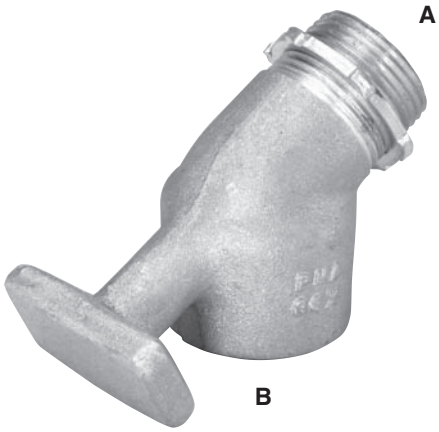

Additional Amphenol® / Pyle® Industrial Products

Amphenol is one of the largest manufacturers of interconnect solutions worldwide. Amphenol's broad offering of products are highly suitable for industrial applications where cable glands and cord grip products are used. Several of the Amphenol Heavy Duyy Connectors are shown here and on the next page.

For more information, please see relevant literature or Amphenol's Website: www.amphenol-industrial.com

Star-Line® Heavy Duty Connectors

Amphenol/Pyle Star-Line connectors are heavy duty environmental solutions for high amperage and high density control and instrumentation applications. They are designed to perform up to amperages of 1135 amps at 1000/VAC or VDC rating. Other features include:

- Exceeds MIL-5015 E and R specifications
- UL listed and CSA listed
- Double lead Acme threads provide complete coupling in one turn of the coupling nut and do not clog under adverse weather conditions
- Large wiring space provided in cable housing and conduit fitting bodies.
- Operating temperatures from -67°F to +257°F
- IP67 rated for environmental sealing.
- Hard anodic coating provides dielectric strength with heat and corrosion resistance.
- 5 Shell styles with over 150 insert patterns available.
- Solder, crimp and pressure terminals available. Circuit breaking power and control types.
- Variety of backend accessories including basketweave cable grips, straight or angled adapters and receptacle mounted to junction boxes.

Typical markets include mass transportation, automotive tooling, power generation, and petrochemical. For more information ask for catalog 12-054.

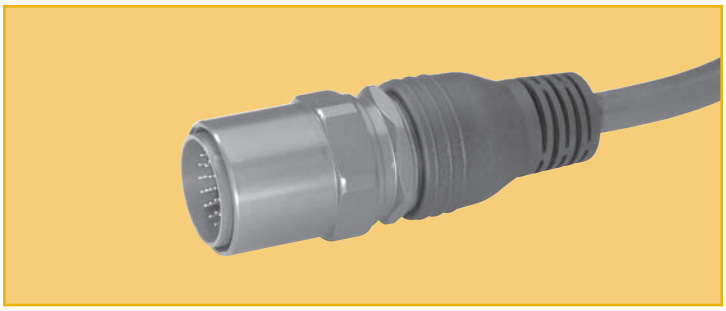

Star-Line EX® Connectors for Harsh/Explosive Environments

Amphenol/Pyle Star-Line EX connectors are a hybrid form of the Star-Line series with higher temperature ranges. This family shares features of the Star-Line with additional features that include:

- Ceneluc Certified for use in Zone 1-IIc locations.
- EX Certified to ATEX certification #03ATEX 1101X
- Can be terminated onto unarmored or armored and sheathed cables built to several popular standards.
- Custom cable assemblies are available

Typical markets include mass transportation, pharmaceutical, manufacturing, power generation, and petrochemical. For more information, ask for catalog 12-054.

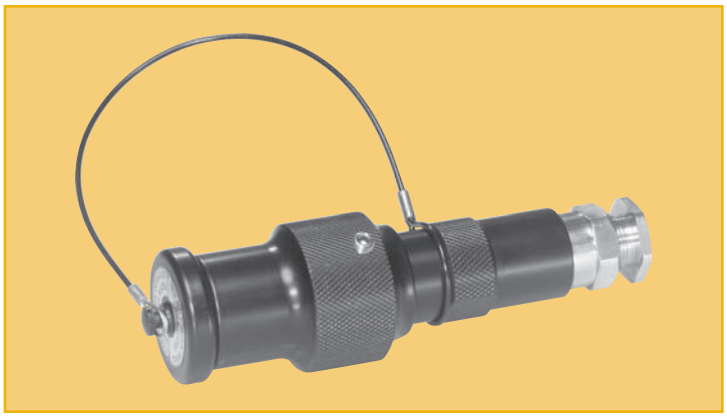

Additional Amphenol® / Pyle® Industrial Products

Amphenol offers RADSOK® contact technology for several industrial connectors. The RADSOK contact is designed for high amperage applications.

Star-Line® and MIL-5015 Connectors with RADSOK®

Connectors enhanced with RADSOK high amperage contacts can handle up to 150% higher amperages than connectors with standard contacts. These are called Amphe-Power™ Connectors and are currently offered in three popular industrial connector families:

- 5015 AC Series
- GT Reverse Bayonet
- Pyle P-Lok Series

Also, the Star-Line Series has inserts available with special RADSOK contacts, and the Neptune® Series is offered exclusively with RADSOK contacts.

The RADSOK patented contact has a hyperbolic, stamped grid configuration within the socket cylinder. As a male pin is inserted, axial members in the female socket deflect, enabling high current flow across the connection with minimal voltage loss.

Typical markets: power generation, petrochemical, and mass transportation. For more information on RADSOK high amperage contacts, ask for Brochure SL-391, Amphe-Power™ Connectors with RADSOK Technology.

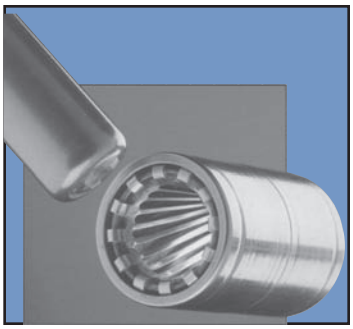

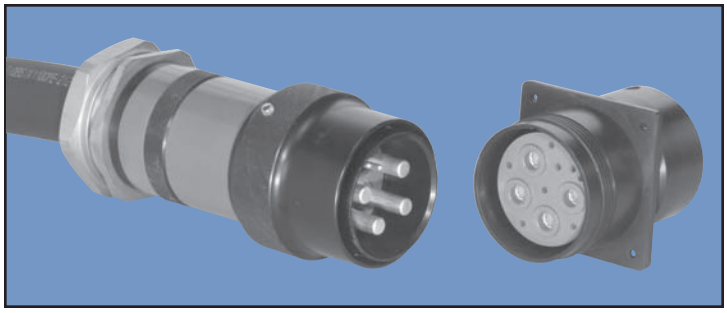

Amphenol Neptune® Connectors with RADSOK®

The Neptune® Series is a new power connector family featuring the RADSOK contact system. Feature include:

- Machined aluminum components
- IP 68-8 rated through SIRA
- Operating temperature rated to -67°F to +225°F
- Three key design to limit cross mating.
- Anodic hardcoat plating.
- Double lead acme threads for easy coupling.
- Decreased weight and panel layout in comparison to the competition.
- Contacts are nickel silver alloy plated and they are designed for longer life/mating cycles.

The Neptune is offered exclusively with RADSOK contact technology. Currently inserts are available with 30 Amp through 400 Amp/480 volts.
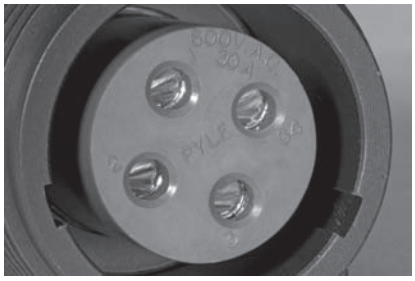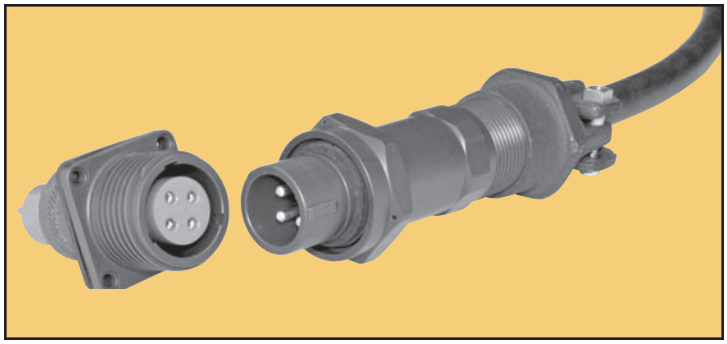
Typical Markets include oil exploration equipment, convention center power distribution, geophysical trucks, portable power distribution equipment, and communication shelters. For more information on the Neptune Series of connectors ask for Product Data Sheet 192.