DEUTSCH DBAS SERIES CONNECTORS

STANDARDS SAE/AS81703 SERIES III, UTE 93422 MODEL HE 311

Extreme Reliability in Harsh Aerospace and Military Applications

Introduction

High Performance
- Compliant with SAE/AS81703 series III, UTE C 93-422 model HE 311 specifications and ESA/SCC 3401
- Up to 1500 full mating/ unmating cycles
- Multiple specific variants for high temperature, cryogenic and pyrotechnic applications, EMI shielding, Dead-Face systems, 1553 Bus, High Speed, HF High Frequency

High Reliability
- Visual and sensitive push-pull locking system (blind mating)
- Double keying system to help prevent any cross connection
- Leading clip preventing any accidental unmating on demand

Custom Design for Integrated Solutions
- Large range of shell types and accessories
- Wide range of insert arrangements
- Multiple surface finishing options
- Large possibilities of specific modifications

SECTION 1:
DBAS 7 Series Connectors

SECTION 2:
DBAS 7 – ESA/SCC QPL Connectors

Overall dimensions and characteristics are given for indication guidance only. We reserve the right to modify them for production improvement reasons.

40 Years of Expertise in the Aerospace Industry

Section 1: DEUTSCH DBAS 7 Series

Connection Reliability

- Visual and sensitive locking (blind mating)
- Double keying system to prevent any cross connection
- Leading clip preventing any accidental unmating on demand
- Interface and individual wire sealing

Large Range of Variants and Accessories

- Mobile and “rack and panel” plugs, plugs with heavy duty lanyard
- Sealed receptacles and hermetic receptacles and feedthrough
- Removable contacts size 6 to 22, crimp, solder and PCB types
- Savers, protective caps and dummy receptacles

Custom Design for Integrated Solutions

- Cryogenic and High Temperature versions
- Dead-Face systems
- Specials (High Speed, HF, pyrotechnic, 1553 bus)

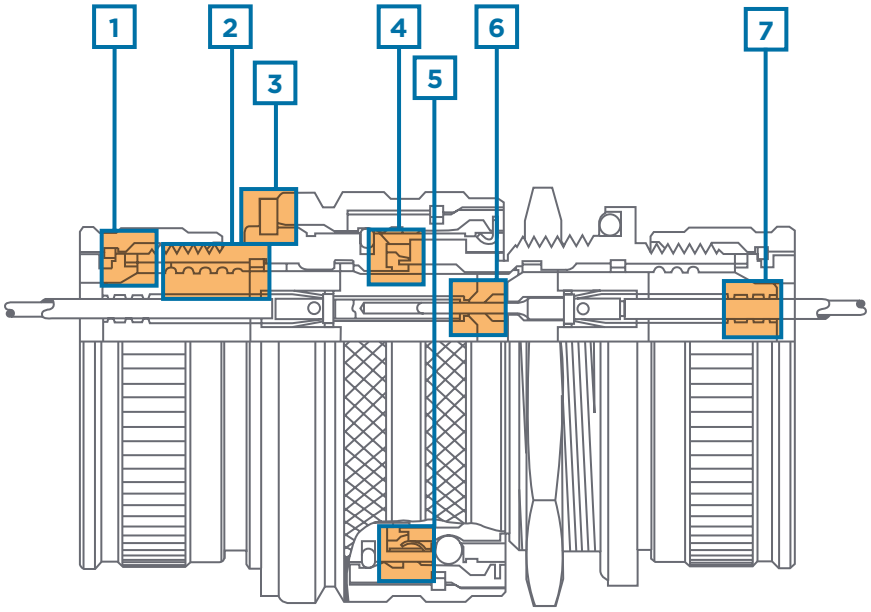

1 Connector rear part fitted with teeth anti-rotation system ensure effective tightening and clamping of accessories

2 Shell/insert sealing assumed by potting

3 Leading clip for plugs to help prevent any accidental unmating on demand (see page 33)

4 Interface sealing assumed by H.F. gasket

5 Improved shell to shell continuity supported by RFI fingers on plugs (see page 8, index G)

6 Individual contact sealing at mating thanks to compression of elastomer on hard insert.

7 Individual wire sealing due to several sealing barriers on rear insert

DEUTSCH DBAS Series Connectors

Technical Characteristics

Mechanical

Shell	Material	Sealed version	Aluminium alloy	
		Hermetic version	DBC - DHS: Steel	
			DBA: Stainless steel	
	Plating	Sealed version	Standard: Nickel	
			Special: consult us	
		Hermetic version	DBC - DHS: Tin over nickel plating	
RFI ring	Material		Beryllium copper	
	Plating		Nickel	
Insert	Material	Sealed version	Fluorinated silicone and thermosetting resin	
		Hermetic version	Glass insert, thermosetting resin, fluorinated silicone	
	Fluids resistance		Compliant with SAE/AS 81703	
Contact	Type	Sealed version	Crimp type	
		Hermetic version	DBC - DBA: Soldered bucket	
	Plating	Sealed version	Gold over nickel	
		Hermetic version	DBC - DBA - DHS: Gold	
Insert contact retention			Size 22: 4.40 daN	Size 12: 11.56 daN
			Size 20: 6.93 daN	Size 8: 11.56 daN
			Size 16: 11.56 daN	Size 6: 11.56 daN
Vibrations			No mechanical nor electrical failure further to 12 hours vibration (4 hours in the 3 axes) 20 G from 10 to 2000 Hz. Resistance to sinusoïdal and random vibrations 20 G effect during 3 minutes from 20 to 2000 Hz. Resistance to critical frequencies and constant accelerations, to pyrotechnic.	
Physical shocks		Sealed version	150 G, during 11 ms in the 3 axes and to free drops	
		Hermetic version	100 G, during 11 ms in the 3 axes	
Durability		Sealed version	1500 full mating / unmating cycles	
		Hermetic version	500 full mating / unmating cycles	
Pressure insert retention		Hermetic version	30 to 70 bars	
Sealing		Hermetic version	Less than to 2,8 mm3/hour under a 1x10-6 torr vacuum	

Environmental Conditions

Service temperature		- 55° C to + 200° C	
Thermal shocks		5 cycles of - 55° C to + 200° C	
Inferior leakage		Leakage inferior to 16 cm3/hour under a 2,1 bar differential pressure	
Corrosion	Sealed and Hermetic version	Withstands 96 hours of salt spray	

Electrical

Withstanding voltage		At sea level	Service I: 1500 V eff. 50 Hz	Service II: 2300 V eff. 50 Hz
		In altitude	At 33000 m Service I: 350 V	Service II: 500 V
Service voltage		Hermetic version	Service I: 600 Veff. 50 Hz	Service II: 1000 Veff. 50 Hz
Insulation resistance		Sealed version	≥ at 10 000 MΩ at 25° C and 60% R.H.	
		Hermetic version	≥ at 5000 MΩ at 25° C and 60 % R.H.	
Mated shell conductivity	Plugs with RFI fingers	Sealed version	≤ 5 mΩ	
		Hermetic version	≤ 50 mΩ	
Contact maximum current		Sealed version	Size 22: 5 A	Size 12: 23 A
			Size 20: 7.5 A	Size 8: 46 A
			Size16: 13 A	
		Hermetic version	Size 20: 5 A	Size 12: 17 A
			Size 16: 10 A	Size 8: 33 A
Diameter over insulating sheath			Size 22: 0.71 to 1.25 mm	Size 12: 2.69 to 4.01 mm
			Size 20: 1.01 to 2.10 mm	Size 8: 3.80 to 5.15mm
			Size 16: 1.35 to 2.62 mm	Size 6: 4.80 to 5.35 mm
Allowed wires section		Sealed version	Size 22: 0.15 to 0.38 mm^2	Size 12: 1.91 to 3.18 mm^2
			Size 20: 0.21 to 0.60 mm^2	Size 8: 5.30 to 8.98 mm^2
			Size 16: 0.60 to 1.34 mm^2	Size 6: See page 42
		Hermetic version	For solder type contacts DBC-DBA	
			Size 20: 0.93 mm^2	Size 12: 3.18 mm^2
			Size 16: 1.34 mm^2	Size 8: 8.98 mm^2

DEUTSCH DBAS Series Connectors

Synoptic

ACCESSORIES

Nut

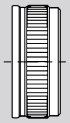

059 Straight cable clamp

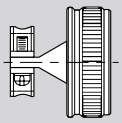

081 90˚ cable clamp

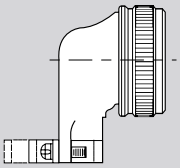

A 140 Adaptor

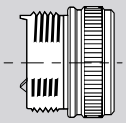

A 083 Potting cup

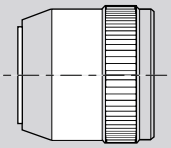

PLUG

DBAS 76 Feel-control locking plug

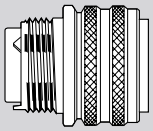

DBAS 78 Plug with heavy duty lanyard

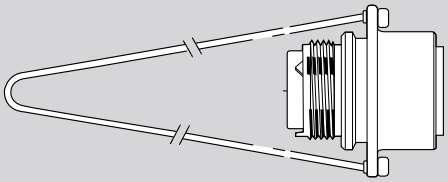

RACK & PANEL CONNECTOR

DBAS 79 Rack and Panel

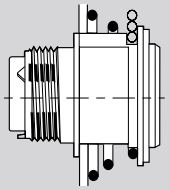

SAVERS

DBAS 172 / DBAS 171

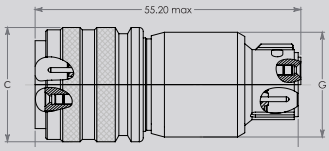

DEUTSCH DBAS Series Connectors

RECEPTACLES

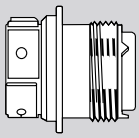

DBAS 70 Square flange 4 holes mounting

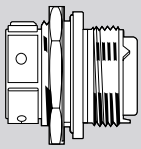

DBAS 74 Jam-nut mounted receptacle

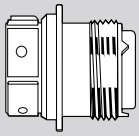

DBAS 71 Cable connecting receptacle

HERMETICAL RECEPTACLES

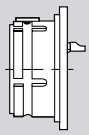

DBA 70H
DBC 70H Square flange 4 holes mounting

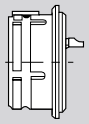

DBA 73H
DBC 73H Solder flange

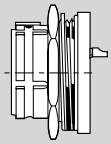

DBA 74H
DBC 74H Jam-nut mounted receptacle

HERMETIC FEEDTHROUGH

DHS 70H Square flange 4 holes mounting

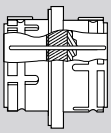

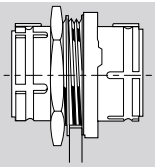

DHS 74H Jam-nut mounted receptacle

ACCESSORIES

Nut

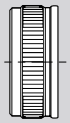

059 Straight cable clamp

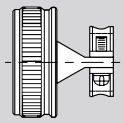

081 90˚ cable clamp

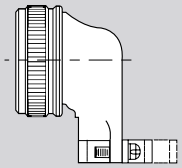

A 140 Adaptor

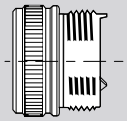

A 083 Potting cup

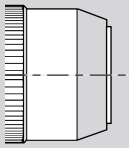

Part Numbering System

DBAS	76	G	27	13	P	N	8	DA	****

Connector type

Shell type
70 Square flange receptacle with nut
71 Cable connecting receptacle with nut
74 Jam-nut mounting receptacle with nut
76 Feel-control locking plug with nut
78 Plug with heavy duty lanyard and nut
79 Rack and panel with nut

Grounding continuity index (only for plugs)
Without Index: no RFI fingers on shells 76 - 78 – 79
With G Index: with RFI fingers on shells 76 - 78 - 79
With GR Index: with RFI fingers on shell 78 + increased minimum release force

Shell size
3-7-12-19-27-37-61

Arrangements
(See page 12-13)

Contact type
P Pin contact
S Socket contact

Insert clocking position
N Normal
W - X - Y - B - C Others
(See page 10)

Index for contacts*
(See pages 39, 41-43)

Key orientation (Except 79)
(See page 11)

Special modifications
(See page 14)

* Micro-coax sizes 16 and 12 available (see pages 41 and 42).

Part Numbering System

DBA 70 H 27 2 P N 1 DA **

Connector type
DBA Stainless steel hermetic receptacle, solder contact
DBC Hermetic receptacle, solder contact
DHS Feedthrough

Shell type
70 Square flange receptacle
73 Solder flange receptacle
74 Jam-nut mounted receptacle

Hermetic

Shell size
3-7-12-19-27-37-61

Arrangements
(See pages 12-13)

Contact type
P Male contact
S Female contact ●
PP Male/male contact ●
PS Male/Female contact ●

Insert clocking position
N Normal
W - X - Y - B - C Others
(See page 10)

Index for contacts*
(See pages 39, 41-43)

Key orientation
(See page 11)

Special modifications
(See page 14)

* Micro-coax sizes 16 and 12 available (see pages 41 and 42).
● Only for DHS.

Insert Clocking Position

Clocking position is normal (N) when the insert vertical axis is intermingled with the shell keyway axis. An unkeying can be performed between 2 connectors of same layout by angular displacement of one of the inserts in its shell. This insert rotation is made in the clockwise for male layouts and in the counter clockwise for female layouts. Angular displacements on the hereafter table give clocking position W, X, Y, B or C.

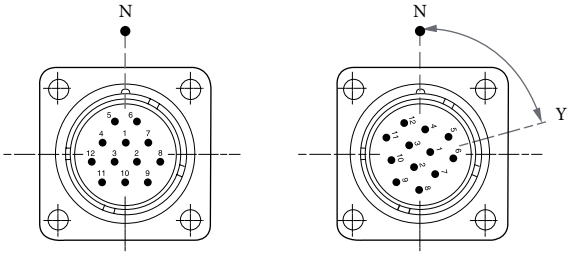

Normal position

Position Y

Example of insert angular displacement, male front face view

Arrangements	Clocking Position in Degrees					Contacts Sizes						Service
	W	X	Y	B	C	22	20	16	12	8	6	
3-0	25	50	75	150	220	—	3	—	—	—	—	I
3-01	—	—	—	—	—	—	—	—	—	1	—	—
7-0	27.30	47.30	75	150	225	—	7	—	—	—	—	I
12-0	15	50	75	150	225	—	12	—	—	—	—	I
19-0	25	50	75	150	225	—	19	—	—	—	—	I
19-2	25	50	75	150	225	—	9	—	—	2	—	I
19-4	—	—	22°30	135	247°30	—	—	—	4	—	—	I
19-7	—	—	75	150	225	—	—	—	7	—	—	I
19-12	25	50	75	150	225	—	—	12	—	—	—	I
27-0	25	50	75	150	225	—	27	—	—	—	—	I
27-2	25	50	75	150	225	—	—	14	—	—	—	II
27-8	25	50	75	150	225	—	—	6	4	—	—	I
27-13	25	50	75	150	225	—	12	—	—	3	—	I
37-0	25	50	75	150	225	—	37	—	—	—	—	I
37-3	20	70	75	—	—	—	—	—	12	—	—	I
37-13	—	—	75	150	225	—	30	—	—	1	—	I
37-19	25	50	75	150	225	—	13	—	—	6	—	I
37-27	—	—	75	150	225	—	6	—	—	7	—	I
37-30	25	50	75	150	225	—	20	—	—	4	—	I
37-922	45	90	—	—	—	—	20	—	—	—	2	I
37-924	105	13	—	—	—	—	—	24	—	—	—	I
37-961	—	—	—	—	—	61	—	—	—	—	—	—
61-0	25	50	75	150	225	—	61	—	—	—	—	I
61-5	25	50	75	150	225	—	49	—	—	2	—	I
61-14	25	50	75	150	225	—	—	37	—	—	—	—
61-21	25	50	75	150	225	—	—	—	—	12	—	I
61-42	—	67°30	—	—	—	—	29	4	8	—	—	—
61-929	—	—	—	—	—	—	15	8	—	6	—	—
61-948	45	90	135	—	—	—	42	4	—	—	2	I
61-949	25	50	75	150	225	—	46	—	—	3	—	

DEUTSCH DBAS Series Connectors

Key Orientation (Except 79)

Receptacle front face view

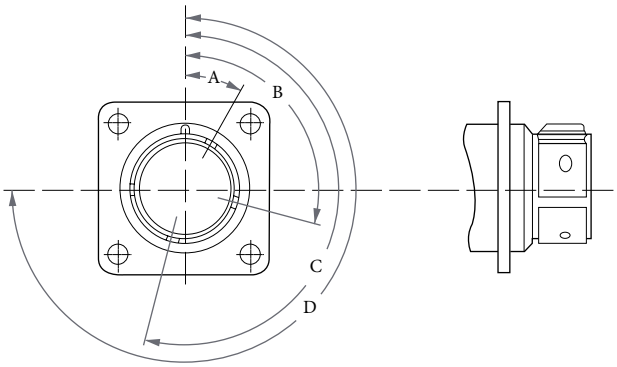

Plug front face view

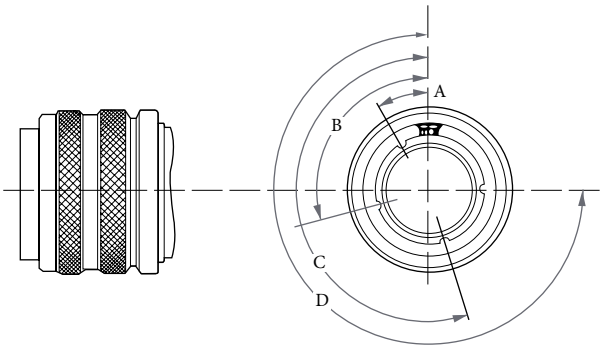

Angles Size	3				7				12				19				27				37				61			
	A	B	C	D	A	B	C	D	A	B	C	D	A	B	C	D	A	B	C	D	A	B	C	D	A	B	C	D
Standard	23	97	187	—	23	97	187	277	30	105	195	270	30	105	195	270	30	105	195	270	30	105	195	270	30	105	195	270
DA	—	—	—	—	23	105	195	300	30	90	225	315	40	105	195	270	40	105	195	270	40	105	195	270	40	105	195	270
DB	—	—	—	—	23	115	210	285	30	120	210	285	30	115	195	270	30	115	195	270	30	115	195	270	30	115	195	270
DC	—	—	—	—	30	120	195	285	30	135	180	300	30	115	210	270	30	115	210	270	30	115	210	270	30	115	210	270
DD	—	—	—	—	30	97	210	270	45	105	210	315	30	115	195	280	30	115	195	280	30	115	195	280	30	115	195	280
DE	—	—	—	—	—	—	—	—	45	90	180	285	—	—	—	—	—	—	—	—	30	90	170	270	30	90	170	270
DF	—	—	—	—	—	—	—	—	45	120	270	300	—	—	—	—	—	—	—	—	30	115	170	255	30	115	170	255
DG	—	—	—	—	—	—	—	—	45	135	195	225	—	—	—	—	—	—	—	—	30	115	180	300	30	115	180	300

Dimensions in mm

DEUTSCH DBAS Series Connectors

Arrangements

Male insert viewed from front face

3-0 3 contacts size 20 *

3-01 1 contact size 8 *

7-0 7 contacts size 20 *

12-0 12 contacts size 20 *

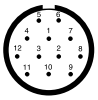

19-0 19 contacts size 20 *

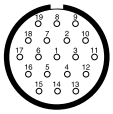

19-2 9 contacts size 20
2 contacts size 8 *

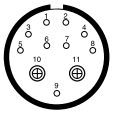

19-4 4 contacts size 12 *

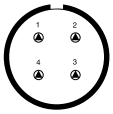

19-7 7 contacts size 12 *

19-12 12 contacts size 16 *

27-0 27 contacts size 20 *

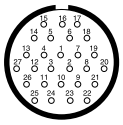

27-2 14 contacts size 16 *

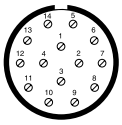

27-8 6 contacts size 16
4 contacts size 12

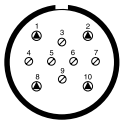

27-13 12 contacts size 20
3 contacts size 8

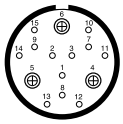

27-913 10 contacts size 20
2 contacts size 8
1 contact size 6 *

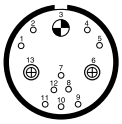

37-0 37 contacts size 20 *

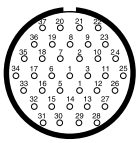

* For hermetic versions, consult TE Connectivity (TE).

DEUTSCH DBAS Series Connectors

37-3 12 contacts size 12

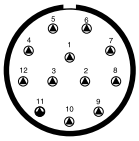

*

37-13 30 contacts size 20
1 contact size 8

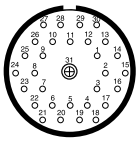

*

37-19 13 contacts size 20
6 contacts size 8

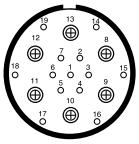

*

37-27 6 contacts size 20
7 contacts size 8

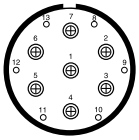

*

37-30 20 contacts size 20
4 contacts size 8

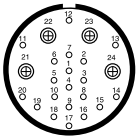

*

37-922 20 contacts size 20
2 contacts size 6

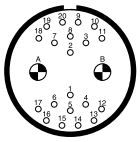

37-924 24 contacts size 16

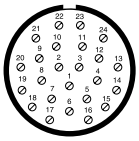

*

37-961 61 contacts size 22

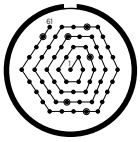

61-0 61 contacts size 20

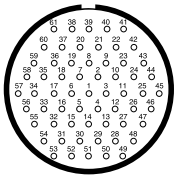

*

61-5 49 contacts size 20
2 contacts size 8

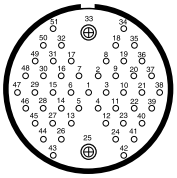

*

61-14 37 contacts size 16

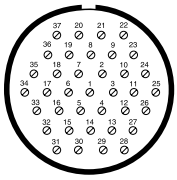

61-21 12 contacts size 8

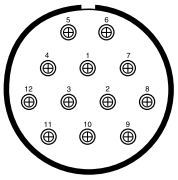

*

61-42 29 contacts size 20
4 contacts size 16
8 contacts size 12

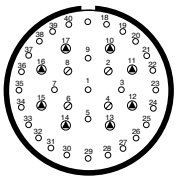

61-948 42 contacts size 20
4 contacts size 16
2 contacts size 6

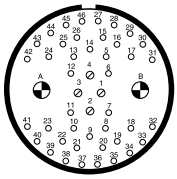

61-949 46 contacts size 20
3 contacts size 8

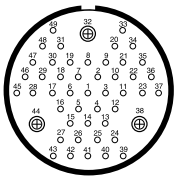

*

* For hermetic versions, consult TE Connectivity (TE)

Special Modifications

Mod Code	Description
1A	Without nut
031	Black anodised
059	Straight cable clamp
081	Elbowed cable clamp
090	Without contact
395	Kerosene-resistant insert
A083	Potting cup
A108	Reverse marking
A127	Panel nut with lockwire holes
A140	Adaptor
A264	PCB contacts
A838	Olive drab cadmium
6116	Black anodised + without nut
6117	Olive drab cadmium + without nut
5005	Black anodised + straight cable clamp
A1123	Fluid resistance
A5532	Kerosene-resistant insert + without nut
*****	For other modifications, consult TE.

Lengths of Lanyard

MOD 614	3 ± 2.10	7 ± 2.10	12 ± 2.10	19 ± 2.10	27 ± 2.10	37 ± 2.10	61 ± 2.10
Standard	120.35	120.10	119.95	119.70	119.40	119.20	118.35
A614	134.95	134.70	134.55	134.30	134.00	133.80	132.95
B614	164.95	164.70	164.55	164.30	164.00	163.80	162.95
C614	194.95	194.70	194.55	194.30	194	193.80	192.95
D614	205.35	205.10	204.95	204.70	204.40	204.20	203.35
E614	217.65	217.40	217.25	217.00	216.70	216.50	215.65
F614	230.65	230.40	230.25	230.00	229.70	229.50	228.65
G614	145.05	144.80	144.65	144.40	144.10	143.90	143.05
H614	95.05	94.80	94.65	94.40	94.10	93.90	93.05
K614	125.45	125.20	125.05	124.80	124.50	124.30	123.45
L614	245.05	244.80	244.65	244.40	244.10	243.90	243.05
M614	495.05	494.80	494.65	494.40	494.10	493.90	493.05
N614	99.35	99.10	98.95	98.70	98.40	98.20	97.35
P614	295.05	294.80	294.65	294.40	294.10	293.90	293.05
Q614	191.05	190.80	190.65	194.40	190.10	189.90	189.05
R614	109.65	109.40	109.25	109.00	108.70	108.50	107.65
S614	154.25	154.00	153.85	153.60	153.30	153.10	152.25
T614	76.05	75.80	75.65	75.40	75.10	74.90	74.05-
U614	119.47	119.22	119.07	118.82	118.52	118.32	117.47
V614	87.75	87.50	87.35	87.10	86.80	86.60	85.75
W614	385.55	385.30	385.15	384.90	384.60	384.40	383.55
X614	171.65	171.40	171.25	171.00	170.70	170.50	169.65

For other lengths of lanyard, consult TE.
Dimensions in mm

DBAS 70 - Square Flange Receptacle

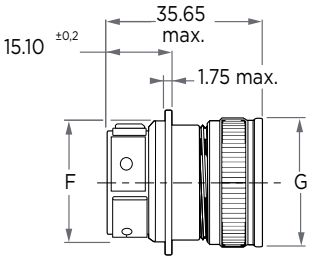

With nut

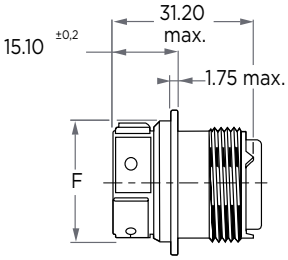

Without nut (MOD 1A)

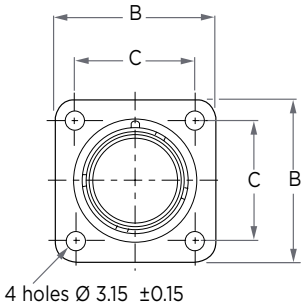

Part Number	B max	C max	F max	G max	Part Number
DBAS 70-3-** P/S *	22.60	15.90	14.50	17.00	DBAS 70-3-**-P/S * 1A
DBAS 70-7-** P/S *	25.80	18.26	17.35	21.80	DBAS 70-7-**-P/S * 1A
DBAS 70-12-** P/S *	28.20	20.62	20.80	25.00	DBAS 70-12-**-P/S * 1A
DBAS 70-19-** P/S *	30.60	23.02	24.00	28.25	DBAS 70-19-**-P/S * 1A
DBAS 70-27-** P/S *	33.00	24.58	28.65	30.95	DBAS 70-27-**-P/S * 1A
DBAS 70-37-** P/S *	36.90	30.12	31.95	34.15	DBAS 70-37-**-P/S * 1A
DBAS 70-61-** P/S *	45.70	36.48	39.90	42.00	DBAS 70-61-**-P/S * 1A

Dimensions in mm

IMPORTANT NOTE:
Female inserts have an overlength of $0{,}56^{\pm 0{,}1}$ in regards with FRONT face of all receptacles types 70, 71 and 74.

For accessories tightening torque strength, please refer to page 30.

DBAS 70 - With Straight Cable Clamp

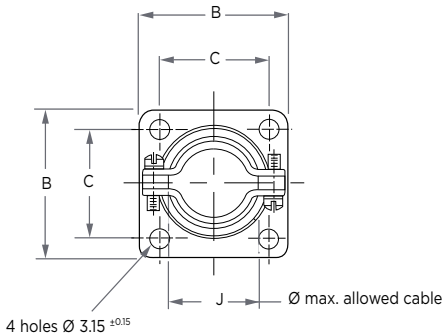

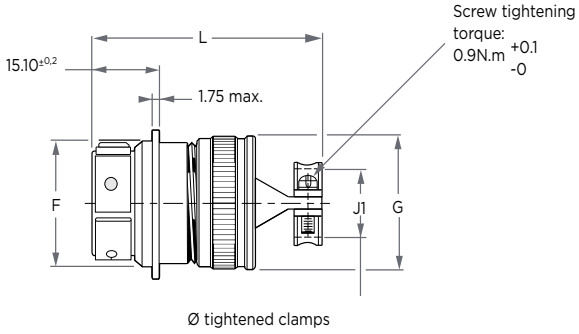

Part Number	B max	C ±0,1	F max	G max	J mini	J1 max	L max
DBAS 70-3-** P/S * 059	22.60	15.90	14.50	17.00	6.60	5.15	44.60
DBAS 70-7-** P/S * 059	25.80	18.26	17.35	21.80	12.75	10.55	44.60
DBAS 70-12-** P/S * 059	28.20	20.62	20.80	25.00	14.60	12.05	50.60
DBAS 70-19-** P/S * 059	30.60	23.02	24.00	28.25	17.80	15.85	50.60
DBAS 70-27-** P/S * 059	33.00	24.58	28.65	30.95	19.80	17.90	50.60
DBAS 70-37-** P/S * 059	36.90	30.12	31.95	34.15	23.00	21.05	50.60
DBAS 70-61-** P/S * 059	45.70	36.48	39.90	42.00	30.10	27.40	50.60

Dimensions in mm

Rear accessories tightening torque (See table page 30)

Females inserts protrude from the FRONT face of all receptacles types 70, 71 and 74 by 0,56 ± 0,1 mm.
Panel sealing gasket to be ordered separately, see page 33. Panel cutout, see page 37

DBAS 70 - With Elbowed Cable Clamp

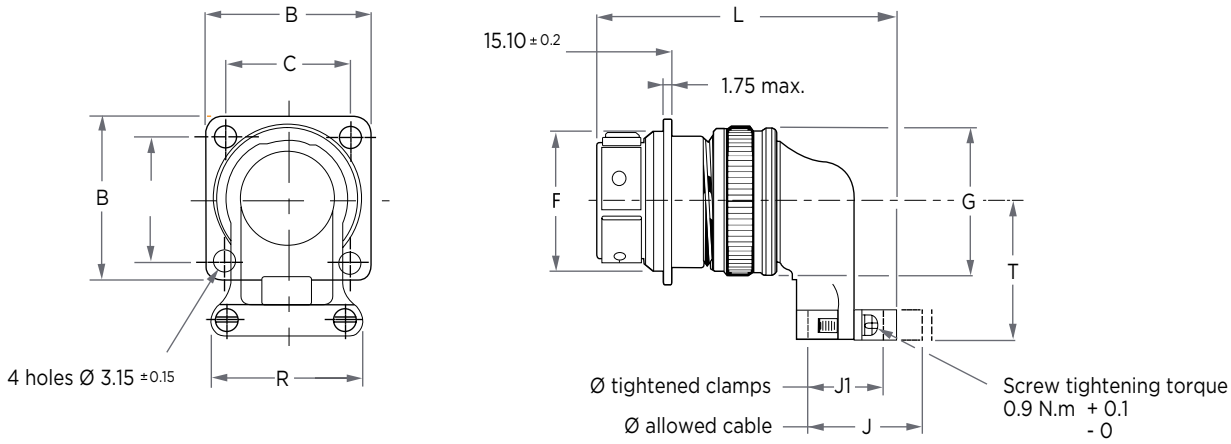

Part Number	B max	C ±0,1	F max	G max	J mini	J1 max	L max	R max	T max
DBAS 70-3-** P/S * 081	22.60	15.90	14.50	17.00	6.60	5.15	48.80	17.40	21.40
DBAS 70-7-** P/S * 081	25.80	18.26	17.35	21.80	12.75	10.55	53.90	23.60	23.80
DBAS 70-12-** P/S * 081	28.20	20.62	20.80	25.00	14.60	12.05	56.15	25.50	25.30
DBAS 70-19-** P/S * 081	30.60	23.02	24.00	28.25	17.80	15.85	59.55	29.70	26.80
DBAS 70-27-** P/S * 081	33.00	24.58	28.65	30.95	19.80	17.90	63.00	32.60	28.30
DBAS 70-37-** P/S * 081	36.90	30.12	31.95	34.15	23.00	21.05	66.35	36.00	29.90
DBAS 70-61-** P/S * 081	45.70	36.48	39.90	42.00	30.10	27.40	72.95	42.80	33.50

Rear accessories tightening torque (See table page 30)

Dimensions in mm

DBAS 70 - With Potting Cup

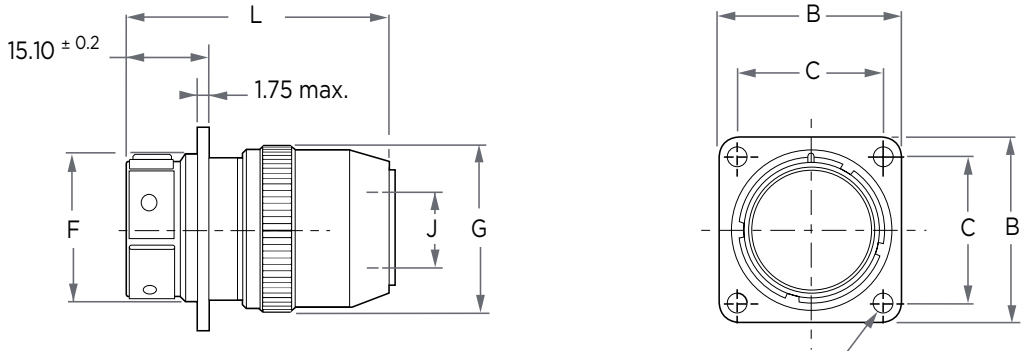

Part Number	B max	C ±0,1	F max	G max	J mini	L max
DBAS 70-3-** P/S * A 083	22.60	15.90	14.50	17.00	4.60	43.50
DBAS 70-7-** P/S * A 083	25.80	18.26	17.35	21.80	10.00	43.50
DBAS 70-12-** P/S * A 083	28.20	20.62	20.80	25.00	11.50	49.00
DBAS 70-19-** P/S * A 083	30.60	23.02	24.00	28.25	15.30	49.00
DBAS 70-27-** P/S * A 083	33.00	24.58	28.65	30.95	17.30	49.00
DBAS 70-37-** P/S * A 083	36.90	30.12	31.95	34.15	20.50	49.00
DBAS 70-61-** P/S * A 083	45.70	36.48	39.90	42.00	26.80	49.00

Rear accessories tightening torque (See table page 30)

Dimensions in mm

Females inserts protrude from the FRONT face of all receptacles types 70, 71 and 74 by 0,56 ± 0,1 mm.
Panel sealing gasket to be ordered separately, see page 33. Panel cutout, see page 37

DBAS 71 - Cable Connecting Receptacle

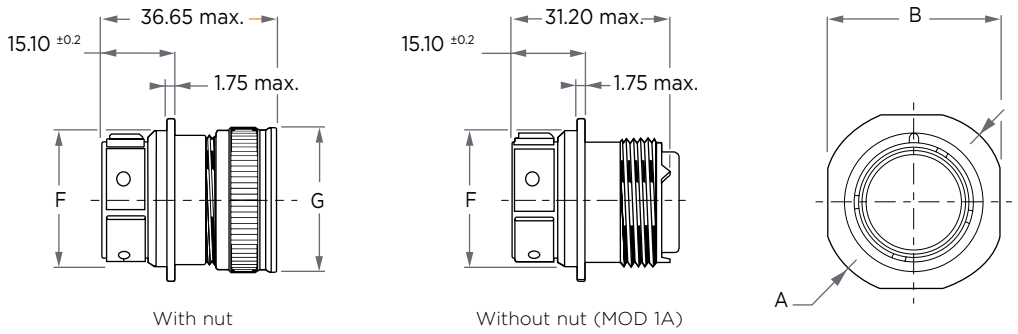

Part Number	A max	B max	F max	G max	Part Number
DBAS 71-3-** P/S *	25.45	22.60	14.50	17.00	DBAS 71-3-** P/S * 1A
DBAS 71-7-** P/S *	28.65	25.80	17.35	21.80	DBAS 71-7-** P/S * 1A
DBAS 71-12-** P/S *	31.05	28.20	20.80	25.00	DBAS 71-12-** P/S * 1A
DBAS 71-19-** P/S *	33.45	30.60	24.00	28.25	DBAS 71-19-**-P/S * 1A
DBAS 71-27-** P/S *	35.85	33.00	28.65	30.95	DBAS 71-27-**-P/S * 1A
DBAS 71-37-** P/S *	39.75	36.90	31.95	34.15	DBAS 71-37-**-P/S * 1A
DBAS 71-61-** P/S *	48.55	45.70	39.90	42.00	DBAS 71-61-**-P/S * 1A

Rear accessories tightening torque (See table page 30)

Dimensions in mm

DBAS 71 - With Straight Cable Clamp

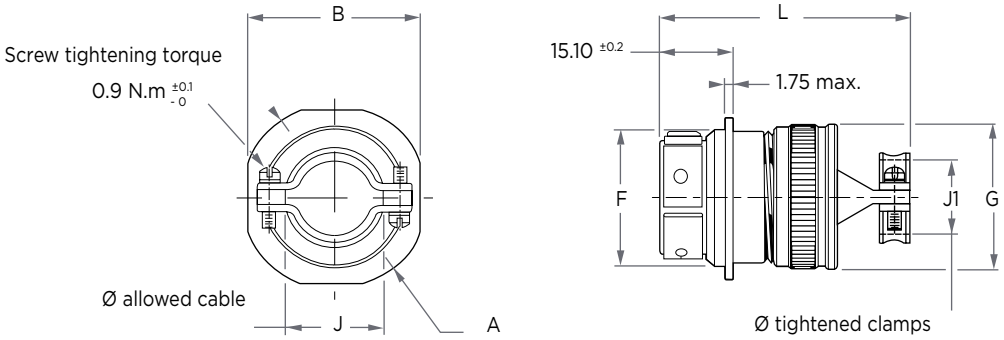

Part Number	A max	B max	F max	G max	J mini	J1 max	L max
DBAS 71-3-** P/S * 059	25.45	22.60	14.50	17.00	6.60	5.15	44.60
DBAS 71-7-** P/S * 059	28.65	25.80	17.35	21.80	12.75	10.55	44.60
DBAS 71-12-** P/S * 059	31.05	28.20	20.80	25.00	14.60	12.05	50.60
DBAS 71-19-** P/S * 059	33.45	30.60	24.00	28.25	17.80	15.85	50.60
DBAS 71-27-** P/S * 059	35.85	33.00	28.65	30.95	19.80	17.90	50.60
DBAS 71-37-** P/S * 059	39.75	36.90	31.95	34.15	23.00	21.05	50.60
DBAS 71-61-** P/S * 059	48.55	45.70	39.90	42.00	30.10	27.40	50.60

Rear accessories tightening torque (See table page 30)

Dimensions in mm

Females inserts protrude from the FRONT face of all receptacles types 70, 71 and 74 by 0,56 ± 0,1 mm.

DBAS 71 - With Elbowed Cable Clamp

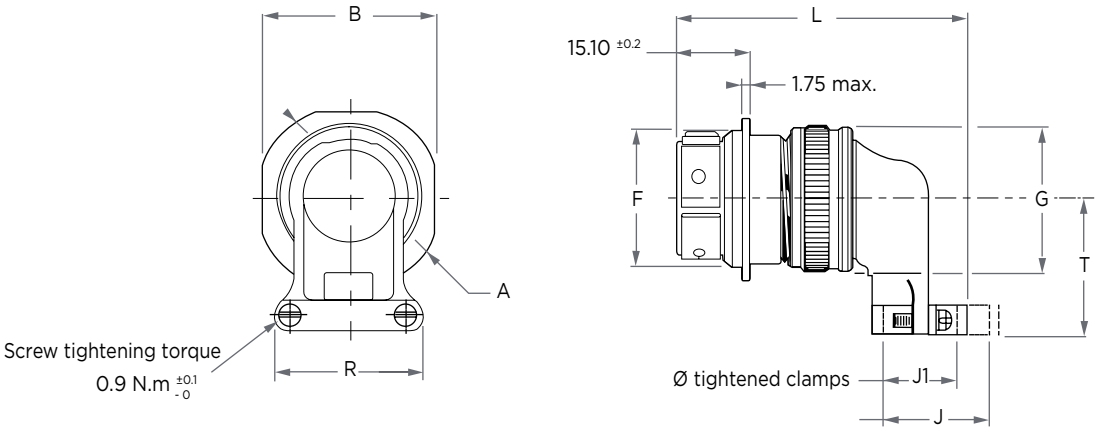

Part Number	A max	B max	F max	G max	J mini	J1 max	L max	R max	T max
DBAS 71-3-** P/S * 081	25.45	22.60	14.50	17.00	6.60	5.15	48.80	17.40	21.40
DBAS 71-7-** P/S * 081	28.65	25.80	17.35	21.80	12.75	10.55	53.90	23.60	23.80
DBAS 71-12-** P/S * 081	31.05	28.20	20.80	25.00	14.60	12.05	56.15	25.50	25.30
DBAS 71-19-** P/S * 081	33.45	30.60	24.00	28.25	17.80	15.85	59.55	29.70	26.80
DBAS 71-27-** P/S * 081	35.85	33.00	28.65	30.95	19.80	17.90	63.00	32.60	28.30
DBAS 71-37-** P/S * 081	39.75	36.90	31.95	34.15	23.00	21.05	66.35	36.00	29.90
DBAS 71-61-** P/S * 081	48.55	45.70	39.90	42.00	30.10	27.40	72.95	42.80	33.50

Dimensions in mm

Rear accessories tightening torque (See table page 30)

DBAS 71 - With Potting Cup

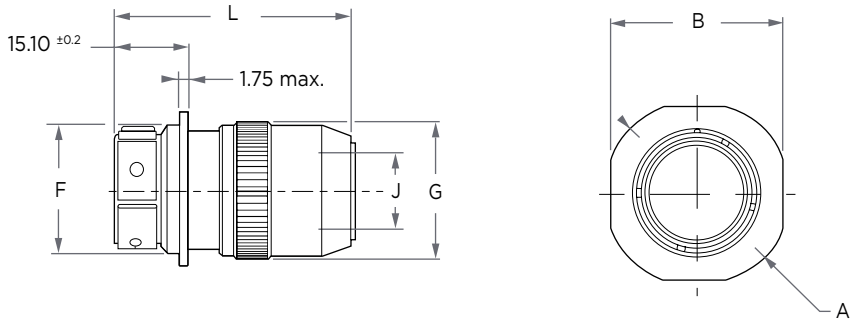

Part Number	A max	B max	F max	G max	J mini	L max
DBAS 71-3-** P/S * A 083	25.45	22.60	14.50	17.00	4.60	43.50
DBAS 71-7-** P/S * A 083	28.65	25.80	17.35	21.80	10.00	43.50
DBAS 71-12-** P/S * A 083	31.05	28.20	20.80	25.00	11.50	49.00
DBAS 71-19-** P/S * A 083	33.45	30.60	24.00	28.25	15.30	49.00
DBAS 71-27-** P/S * A 083	35.85	33.00	28.65	30.95	17.30	49.00
DBAS 71-37-** P/S * A 083	39.75	36.90	31.95	34.15	20.50	49.00
DBAS 71-61-** P/S * A 083	48.55	45.70	39.90	42.00	26.80	49.00

Dimensions in mm

Rear accessories tightening torque (See table page 30)

Females inserts protrude from the FRONT face of all receptacles types 70, 71 and 74 by 0,56 ± 0,1 mm.

DBAS 74 - Jam-Nut Mounting Receptacle

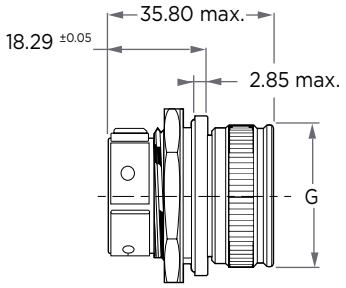

With nut

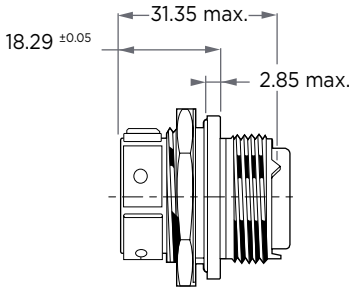

Without nut (MOD 1A)

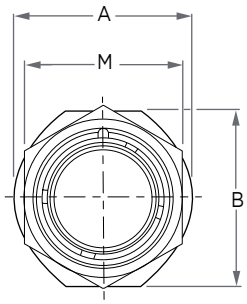

Part Number	A max	B max	G max	M max	Max. Nut Panel Tightening Torque	Part Number
DBAS 74-3-** P/S *	19.20	19.20	17.00	16.31	0.70 daN.m	DBAS 74-3-**-P/S * 1A
DBAS 74-7-** P/S *	22.40	22.40	21.80	21.07	1.00 daN.m	DBAS 74-7-**-P/S * 1A
DBAS 74-12-** P/S *	27.20	27.20	25.00	24.24	1.30 daN.m	DBAS 74-12-**-P/S * 1A
DBAS 74-19-** P/S *	30.40	29.60	28.25	27.40	1.50 daN.m	DBAS 74-19-**-P/S * 1A
DBAS 74-27-** P/S *	33.60	33.50	30.95	32.18	1.80 daN.m	DBAS 74-27-**-P/S * 1A
DBAS 74-37-** P/S *	38.30	36.30	34.15	35.36	2.20 daN.m	DBAS 74-37-**-P/S * 1A
DBAS 74-61-** P/S *	47.80	47.20	42.00	43.02	2.90 daN.m	DBAS 74-61-**-P/S * 1A

Rear accessories tightening torque (See table page 30)

Dimensions in mm

DBAS 74 - With Straight Cable Clamp

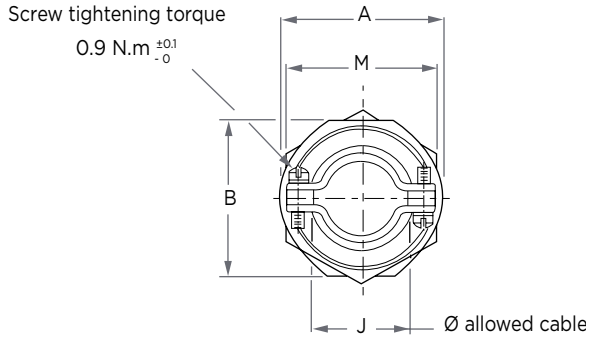

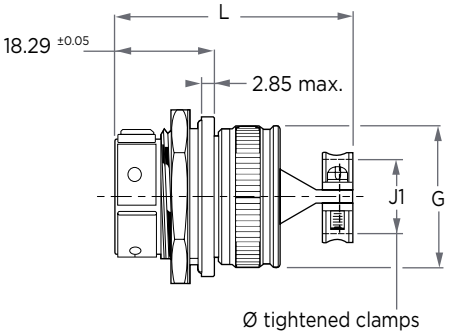

Part Number	A max	B max	G max	J max	J1 max	L max	M max	Max. Nut Panel Tightening Torque
DBAS 74-3-** P/S * 059	19.20	19.20	17.00	6.60	5.15	44.80	16.31	0.70 daN.m
DBAS 74-7-** P/S * 059	22.40	22.40	21.80	12.75	10.55	44.80	21.07	1.00 daN.m
DBAS 74-12-** P/S * 059	27.20	27.20	25.00	14.60	12.05	50.80	24.24	1.30 daN.m
DBAS 74-19-** P/S * 059	30.40	29.60	28.25	17.80	15.85	50.80	27.40	1.50 daN.m
DBAS 74-27-** P/S * 059	33.60	33.50	30.95	19.80	17.90	50.80	32.18	1.80 daN.m
DBAS 74-37-** P/S * 059	38.30	36.30	34.15	23.00	21.05	50.80	35.36	2.20 daN.m
DBAS 74-61-** P/S * 059	47.80	47.20	42.00	30.10	27.40	50.80	43.02	2.90 daN.m

Rear accessories tightening torque (See table page 30)

Dimensions in mm

Females inserts protrude from the FRONT face of all receptacles types 70, 71 and 74 by 0,56 ± 0,1 mm.
O'ring to be ordered separately, see page 33. Panel cutout, see page 37.

DBAS 74 - With Elbowed Cable Clamp

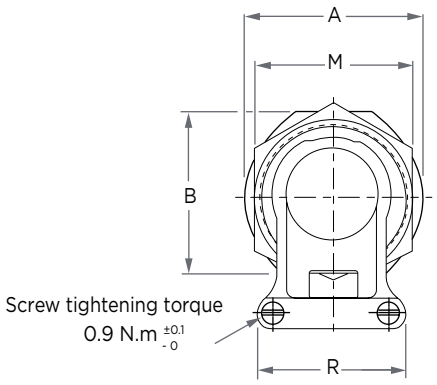

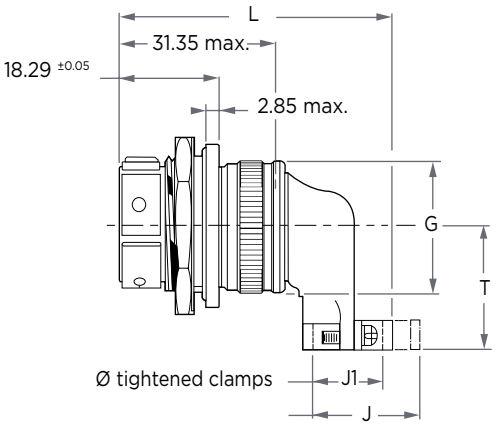

Part Number	A max	B max	G max	J max	J1 max	L max	M max	R max	T max	Max. Nut Panel Tightening Torque
DBAS 74-3-** P/S * 081	19.20	19.20	17.00	6.60	5.15	48.95	16.31	17.40	21.40	0.70 daN.m
DBAS 74-7-** P/S * 081	22.40	22.40	21.80	12.75	10.55	54.05	21.07	23.60	23.80	1.00 daN.m
DBAS 74-12-** P/S * 081	27.20	27.20	25.00	14.60	12.05	56.30	24.24	25.50	25.30	1.30 daN.m
DBAS 74-19-** P/S * 081	30.40	29.60	28.25	17.80	15.85	59.70	27.40	29.70	26.80	1.50 daN.m
DBAS 74-27-** P/S * 081	33.60	33.50	30.95	19.80	17.90	63.15	32.18	32.60	28.30	1.80 daN.m
DBAS 74-37-** P/S * 081	38.30	36.30	34.15	23.00	21.05	66.50	35.36	36.00	29.90	2.20 daN.m
DBAS 74-61-** P/S * 081	47.80	47.20	42.00	30.10	27.40	73.10	43.02	42.80	33.50	2.90 daN.m

Dimensions in mm

Rear accessories tightening torque (See table page 30)

DBAS 74 - With Potting Cup

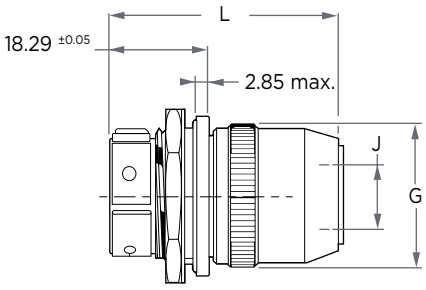

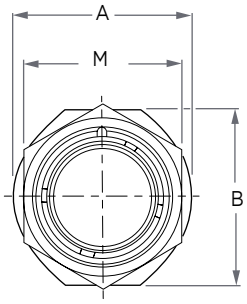

Part Number	A max	B max	G max	J mini	L max	M max	Max. Nut Panel Tightening Torque
DBAS 74-3-** P/S * A 083	19.20	19.20	17.00	4.60	43.65	16.31	0.70 daN.m
DBAS 74-7-** P/S * A 083	22.40	22.40	21.80	10.00	43.65	21.07	1.00 daN.m
DBAS 74-12-** P/S * A 083	27.20	27.20	25.00	11.50	49.15	24.24	1.30 daN.m
DBAS 74-19-** P/S * A 083	30.40	29.60	28.25	15.30	49.15	27.40	1.50 daN.m
DBAS 74-27-** P/S * A 083	33.60	33.50	30.95	17.30	49.15	32.18	1.80 daN.m
DBAS 74-37-** P/S * A 083	38.30	36.30	34.15	20.50	49.15	35.36	2.20 daN.m
DBAS 74-61-** P/S * A 083	47.80	47.20	42.00	26.80	49.15	43.02	2.90 daN.m

Dimensions in mm

Rear accessories tightening torque (See table page 30)

Females inserts protrude from the FRONT face of all receptacles types 70, 71 and 74 by 0,56 ± 0,1 mm.
O'ring to be ordered separately, see page 33. Panel cutout, see page 37.

DBAS 76 - Feel-Control Locking Plug

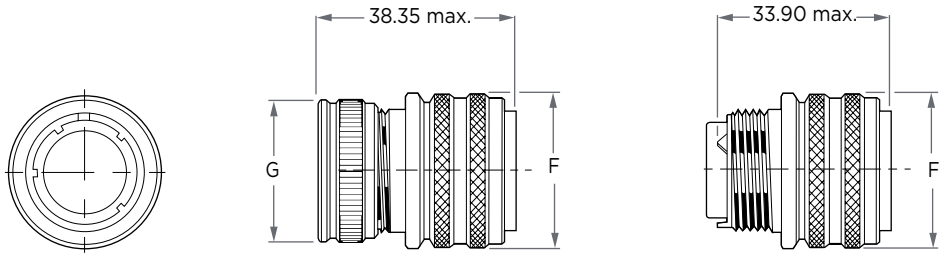

With nut

Without nut (MOD 1A)

Part Number	F max.	G max.	Part Number
DBAS 76-3-** P/S *	20.40	17.00	DBAS 76-3-** P/S * 1A
DBAS 76-7-** P/S *	23.70	21.80	DBAS 76-7-** P/S * 1A
DBAS 76-12-** P/S *	26.90	25.00	DBAS 76-12-** P/S * 1A
DBAS 76-19-** P/S *	31.50	28.25	DBAS 76-19-** P/S * 1A
DBAS 76-27-** P/S *	36.10	30.95	DBAS 76-27-** P/S * 1A
DBAS 76-37-** P/S *	39.30	34.15	DBAS 76-37-** P/S * 1A
DBAS 76-61-** P/S *	47.30	42.00	DBAS 76-61-** P/S * 1A

Dimensions in mm

Rear accessories tightening torque (See table page 30)

DBAS 76 - With Straight Cable Clamp

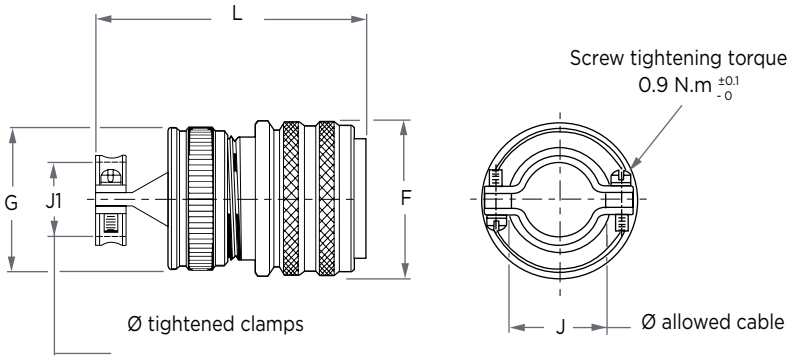

Part Number	F max.	G max.	J max.	J1 max.	L max.
DBAS 76-3-** P/S * 059	20.40	17.00	6.60	5.15	47.35
DBAS 76-7-** P/S * 059	23.70	21.80	12.75	10.55	47.35
DBAS 76-12-** P/S * 059	26.90	25.00	14.60	12.05	53.35
DBAS 76-19-** P/S * 059	31.50	28.25	17.80	15.85	53.35
DBAS 76-27-** P/S * 059	36.10	30.95	19.80	17.90	53.35
DBAS 76-37-** P/S * 059	39.30	34.15	23.00	21.05	53.35
DBAS 76-61-** P/S * 059	47.30	42.00	31.10	27.40	53.35

Dimensions in mm

Rear accessories tightening torque (See table page 30)

DBAS 76 - With Elbowed Cable Clamp

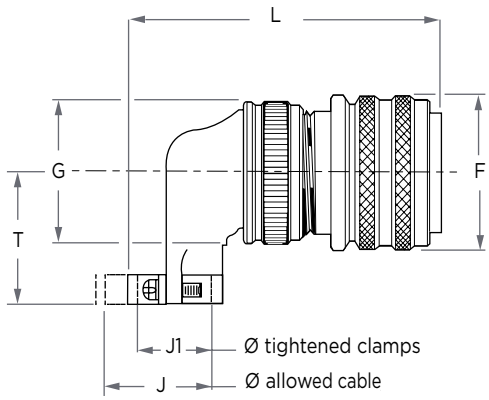

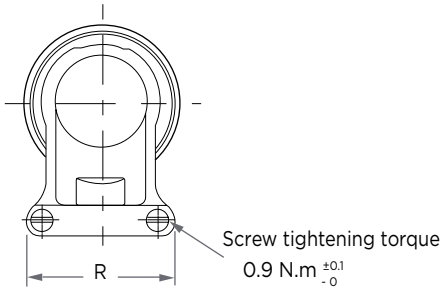

Part Number	F max	G max	J max	J1 max	L max	R max	T max
DBAS 76-3-** P/S * 081	20.40	17.00	6.60	5.15	51.50	17.40	21.40
DBAS 76-7-** P/S * 081	23.70	21.80	12.75	10.55	56.60	23.60	23.80
DBAS 76-12-** P/S * 081	26.90	25.00	14.60	12.05	58.85	25.50	25.30
DBAS 76-19-** P/S * 081	31.50	28.25	17.80	15.85	62.25	29.70	26.80
DBAS 76-27-** P/S * 081	36.10	30.95	19.80	17.90	65.70	32.60	28.30
DBAS 76-37-** P/S * 081	39.30	34.15	23.00	21.05	69.05	36.00	29.90
DBAS 76-61-** P/S * 081	47.30	42.00	30.10	27.40	75.65	42.80	33.50

Dimensions in mm

Rear accessories tightening torque (See table page 30)

DBAS 76 - With Potting Cup

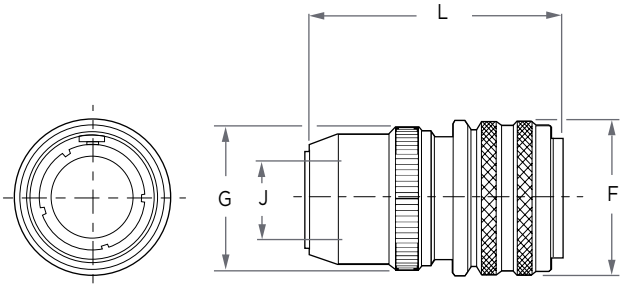

Part Number	F max	G max	J max	J1 max
DBAS 76-3-** P/S * A 083	20.40	17.00	4.60	46.20
DBAS 76-7-** P/S * A 083	23.70	21.80	10.00	46.20
DBAS 76-12-** P/S * A 083	26.90	25.00	11.50	51.70
DBAS 76-19-** P/S * A 083	31.50	28.25	15.30	51.70
DBAS 76-27-** P/S * A 083	36.10	30.95	17.30	51.70
DBAS 76-37-** P/S * A 083	39.30	34.15	20.50	51.70
DBAS 76-61-** P/S * A 083	47.30	42.00	26.80	51.70

Dimensions in mm

Rear accessories tightening torque (See table page 30)

DBAS 78 - With Heavy Duty Lanyard

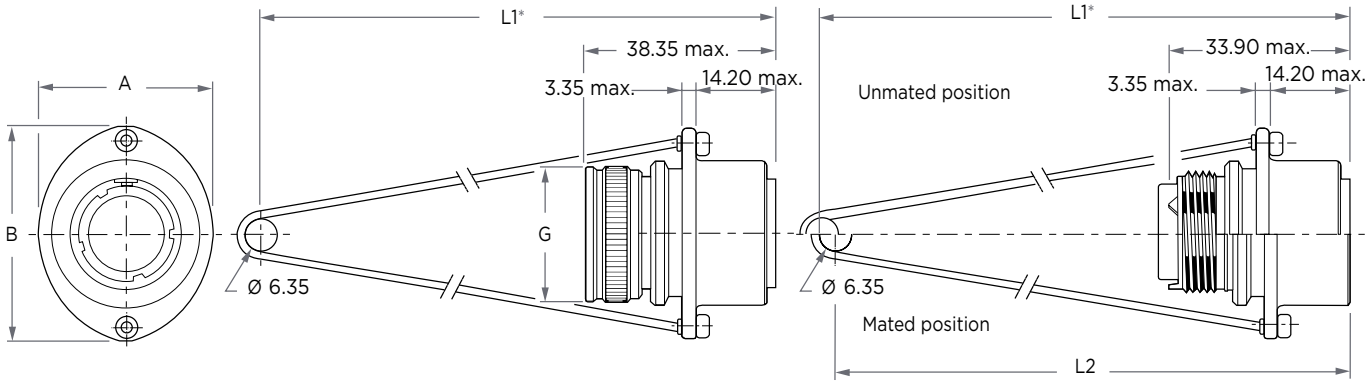

Part Number	A max	B max	G max	L2 +2.1	L1 +2.1	Part Number
DBAS 78-3-** P/S *	23.30	31.85	17.00	117.65	120.35	DBAS 78-3-** P/S * 1A
DBAS 78-7-** P/S *	26.80	35.65	21.80	117.40	120.10	DBAS 78-7-** P/S * 1A
DBAS 78-12-** P/S *	29.60	38.70	25.00	117.25	119.95	DBAS 78-12-** P/S * 1A
DBAS 78-19-** P/S *	33.55	42.50	28.25	117.00	119.70	DBAS 78-19-** P/S * 1A
DBAS 78-27-** P/S *	37.20	46.20	30.95	116.70	119.40	DBAS 78-27-** P/S * 1A
DBAS 78-37-** P/S *	40.70	48.45	34.15	116.50	119.20	DBAS 78-37-** P/S * 1A
DBAS 78-61-** P/S *	47.85	56.60	42.00	115.64	118.35	DBAS 78-61-** P/S * 1A

Dimensions in mm

Rear accessories tightening torque (See table page 30)
For lanyard lengths, see table page 14.
* For specific lengths of lanyards, consult TE

DBAS 78 - With Straight Cable Clamp and Heavy Duty Lanyard

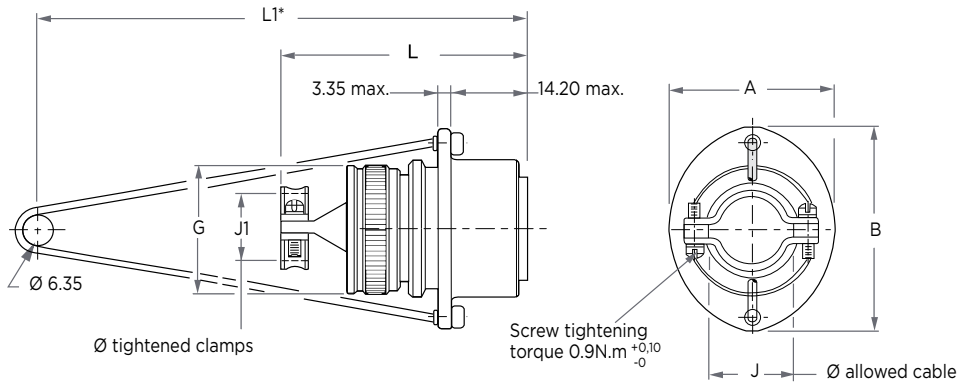

Part Number	A max	B max	G max	J min	J1 max	L max	L1 +2.1
DBAS 78-3-** P/S * 059	23.30	31.85	17.00	6.60	5.15	47.35	120.35
DBAS 78-7-** P/S * 059	26.80	35.65	21.80	12.75	10.55	47.35	120.10
DBAS 78-12-** P/S * 059	29.60	38.70	25.00	14.60	12.05	53.35	119.95
DBAS 78-19-** P/S * 059	33.55	42.50	28.25	17.80	15.85	53.35	119.70
DBAS 78-27-** P/S * 059	37.20	46.20	30.95	19.80	17.90	53.35	119.40
DBAS 74-37-** P/S * 059	40.70	48.45	34.15	23.00	21.05	53.35	119.20
DBAS 78-61-** P/S * 059	47.85	56.60	42.00	30.10	27.40	53.35	118.35

Dimensions in mm

Rear accessories tightening torque (See table page 30)

Traction angle ± 15° in all axis. For lanyard lengths, see table page 14. For specific lengths of lanyard, consult TE.

DBAS 78 - With Elbowed Cable Clamp

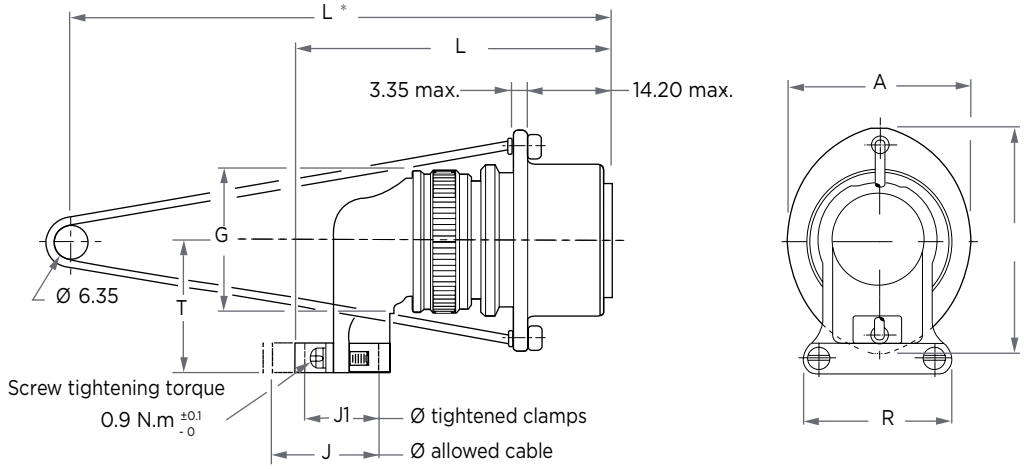

Part Number	A max	B max	G max	J min	J1 max	L max	L1 +2.1	R max	T max
DBAS 78-3-** P/S * 081	23.30	31.85	17.00	6.60	5.15	51.50	120.35	17.40	21.40
DBAS 78-7-** P/S * 081	26.80	35.65	21.80	12.75	10.55	56.60	120.10	23.60	23.80
DBAS 78-12-** P/S * 081	29.60	38.70	25.00	14.60	12.05	58.85	119.95	25.50	25.30
DBAS 78-19-** P/S * 081	33.55	42.50	28.25	17.80	15.85	62.25	119.70	29.70	26.80
DBAS 78-27-** P/S * 081	37.20	46.20	30.95	19.80	17.90	65.70	119.40	32.60	28.30
DBAS 78-37-** P/S * 081	40.70	48.45	34.15	23.00	21.05	69.05	119.20	36.00	29.90
DBAS 78-61-** P/S * 081	47.85	56.60	42.00	30.10	27.40	75.65	118.35	42.80	33.50

Rear accessories tightening torque (See table page 30)
For lanyard lengths, see table page 14.
* For specific lengths of lanyards, consult TE

Dimensions in mm

DBAS 78 - With Potting Cup

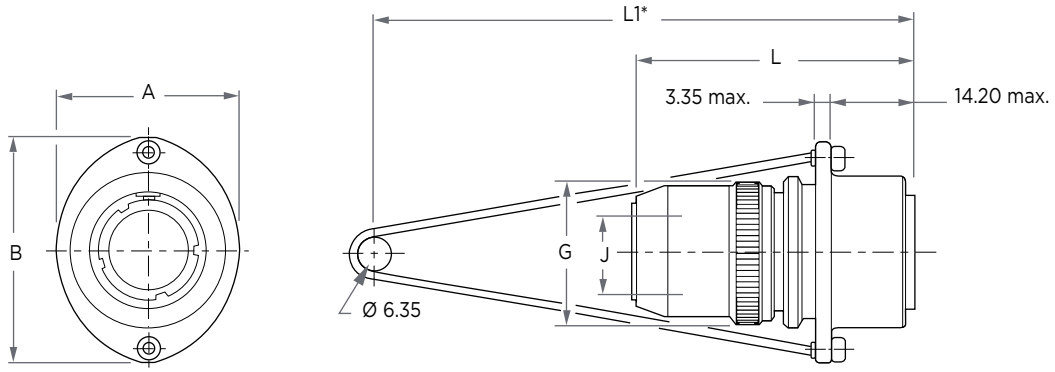

Part Number	A max	B max	G max	J max	L max	L1 +2.1
DBAS 78-3-** P/S * A 083	23.30	31.85	17.00	4.60	46.20	120.35
DBAS 78-7-** P/S * A 083	26.80	35.65	21.80	10.00	46.20	120.10
DBAS 78-12-** P/S * A 083	29.60	38.70	25.00	11.50	51.70	119.95
DBAS 78-19-** P/S * A 083	33.55	42.50	28.25	15.30	51.70	119.70
DBAS 78-27-** P/S * A 083	37.20	46.20	30.95	17.30	51.70	119.40
DBAS 78-37-** P/S * A 083	40.70	48.45	34.15	20.50	51.70	119.20
DBAS 78-61-** P/S * A 083	47.85	56.60	42.00	26.80	51.70	118.35

Rear accessories tightening torque (See table page 30)

Dimensions in mm

Traction angle ± 15° in all axis For lanyard lengths, see table page 14.
For specific lengths of lanyard, consult us

DBAS 79 - Rack and Panel

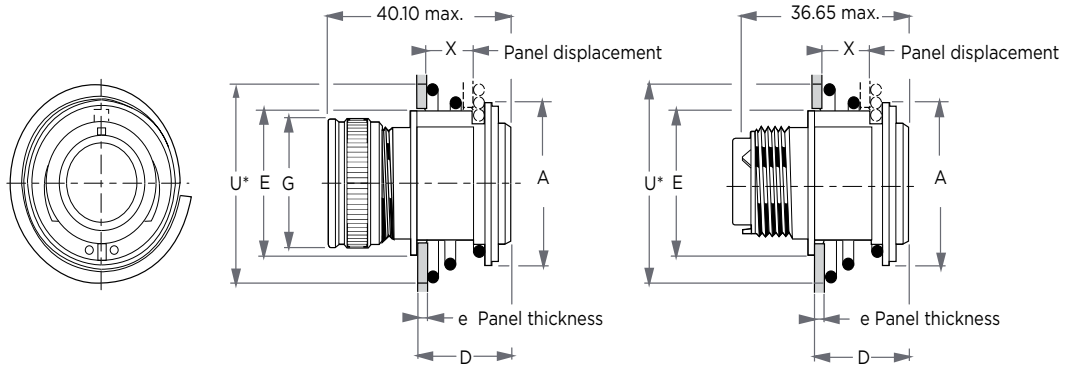

Part Number	A max	D max	E max	G max	U* max	X max	Compression Force for X Effort max	nul	Part Number
DBAS 79-3-** P/S *	22.45	21.05	19.30	17.00	31.00*	13.95-e	1.60 daN.m	0.30 daN.m	DBAS 79-3-** P/S * 1A
DBAS 79-7-** P/S *	29.60	20.85	24.40	21.80	34.30*	12.30-e	3.30 daN.m	0.70 daN.m	DBAS 79-7-** P/S * 1A
DBAS 79-12-** P/S *	31.90	20.85	27.25	25.00	39.75*	12.45-e	5.00 daN.m	1.20 daN.m	DBAS 79-12-** P/S * 1A
DBAS 79-19-** P/S *	35.15	20.85	32.00	28.25	43.40*	12.15-e	8.70 daN.m	1.90 daN.m	DBAS 79-19-** P/S * 1A
DBAS 79-27-** P/S *	38.70	20.60	35.75	30.95	47.15*	11.80-e	11.80 daN.m	2.70 daN.m	DBAS 79-27-** P/S * 1A
DBAS 79-37-** P/S *	45.95	20.60	40.60	34.15	53.50*	11.60-e	15.60 daN.m	3.70 daN.m	DBAS 79-37-** P/S * 1A
DBAS 79-61-** P/S *	54.40	20.30	50.40	42.00	72.00*	9.35-e	26.20 daN.m	6.10 daN.m	DBAS 79-61-** P/S * 1A

Dimensions in mm

Rear accessories tightening torque
(See table page 30)
*Only for the spring

DBAS 79 - With Straight Cable Clamp

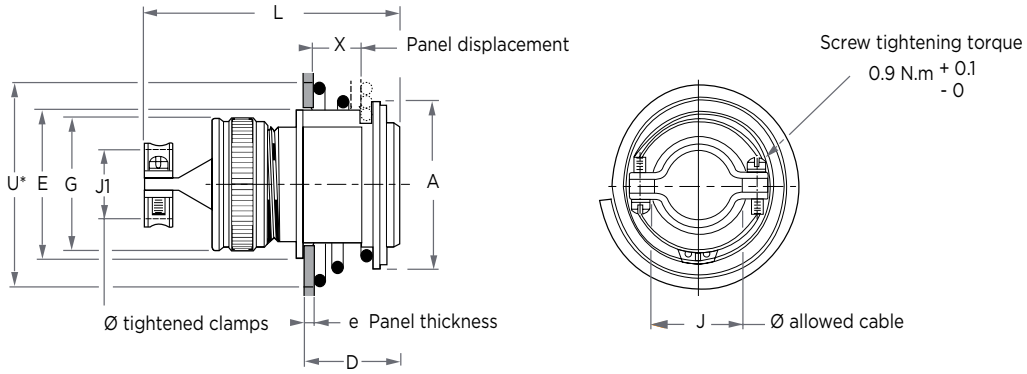

Part Number	A max	D max	E max	G max	J max	J1 max	L max	U* max	X max	Compression Force for X max	nul
DBAS 79-3-** P/S * 059	22.45	21.05	19.30	17.00	6.60	5.15	49.10	31.00*	13.95-e	1.60 daN.m	0.30 daN.m
DBAS 79-7-** P/S * 059	29.60	20.85	24.40	21.80	12.75	10.55	49.10	34.30*	12.30-e	3.30 daN.m	0.70 daN.m
DBAS 79-12-** P/S * 059	31.90	20.85	27.25	25.00	14.60	12.05	55.10	39.75*	12.45-e	5.00 daN.m	1.20 daN.m
DBAS 79-19-** P/S * 059	35.15	20.85	32.00	28.25	17.80	15.85	55.10	43.40*	12.15-e	8.70 daN.m	1.90 daN.m
DBAS 79-27-** P/S * 059	38.70	20.60	35.75	30.95	19.80	17.90	55.10	47.15*	11.80-e	11.80 daN.m	2.70 daN.m
DBAS 79-37-** P/S * 059	45.95	20.60	40.60	34.15	23.00	21.05	55.10	53.50*	11.60-e	15.60 daN.m	3.70 daN.m
DBAS 79-61-** P/S * 059	54.40	20.30	50.40	42.00	30.10	27.40	55.10	72.00*	9.35-e	26.20 daN.m	6.10 daN.m

Dimensions in mm

Rear accessories tightening torque
(See table page 30)
*Only for the spring

To be used with the spring compressed to the maximum panel displacement X depends on thickness (e) chosen by the user.
Panel cutout, see page 37. Rack system mounting, see NU 025-011

DBAS 79 - With Elbowed Cable Clamp

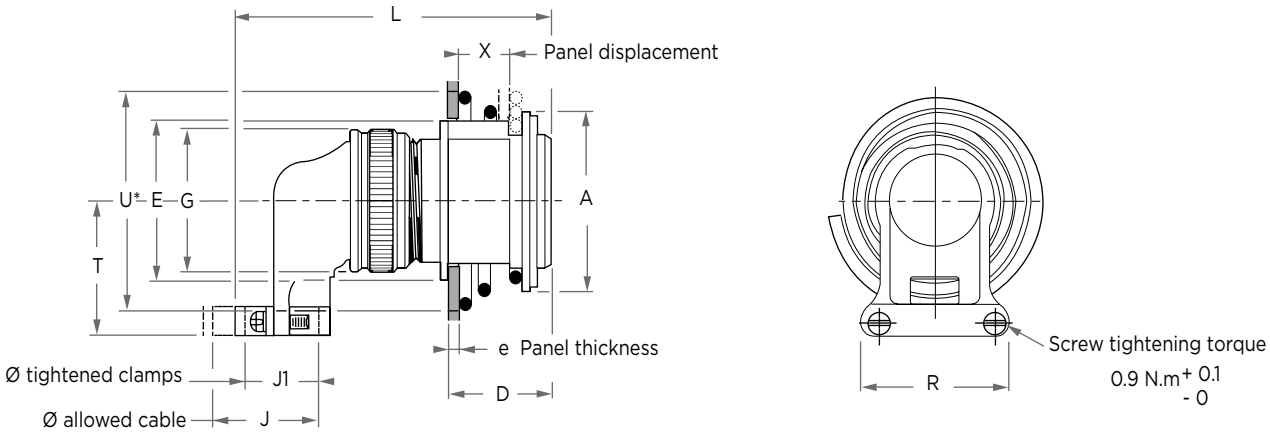

Part Number	A max	D max	E max	G max	J mini	J1 max	L max	R max	T max	U* max	X max	Compression Force for X max	Compression Force for X nul
DBAS 79-3-** P/S * 081	22.45	21.05	19.30	17.00	6.60	5.15	53.25	17.40	21.40	31.00*	13.95-e	1.60 daN.m	0.30 daN.m
DBAS 79-7-** P/S * 081	29.60	20.85	24.40	21.80	12.75	10.55	58.35	23.60	23.80	34.30*	12.30-e	3.30 daN.m	0.70 daN.m
DBAS 79-12-** P/S * 081	31.90	20.85	27.25	25.00	14.60	12.05	60.60	25.50	25.30	39.75*	12.45-e	5.00 daN.m	1.20 daN.m
DBAS 79-19-** P/S * 081	35.15	20.85	32.00	28.25	17.80	15.85	64.00	29.70	26.80	43.40*	12.15-e	8.70 daN.m	1.90 daN.m
DBAS 79-27-** P/S * 081	38.70	20.60	35.75	30.95	19.80	17.90	67.45	32.60	28.30	47.15*	11.80-e	11.80 daN.m	2.70 daN.m
DBAS 79-37-** P/S * 081	45.95	20.60	40.60	34.15	23.00	21.05	70.80	36.00	29.90	53.50*	11.60-e	15.60 daN.m	3.70 daN.m
DBAS 79-61-** P/S * 081	54.40	20.30	50.40	42.00	30.10	27.40	77.40	42.80	33.50	72.00*	9.35-e	26.20 daN.m	6.10 daN.m

Dimensions in mm

Rear accessories tightening torque
(See table page 30)
*Only for the spring

To be used with the spring compressed to the maximum Panel displacement X depends on thickness (e) chosen by the user.
Panel cutout, see page 37. Rack system mounting, see NU 025-01125-011

DBA / DBC 70H - Hermetic Square Flange Receptacle

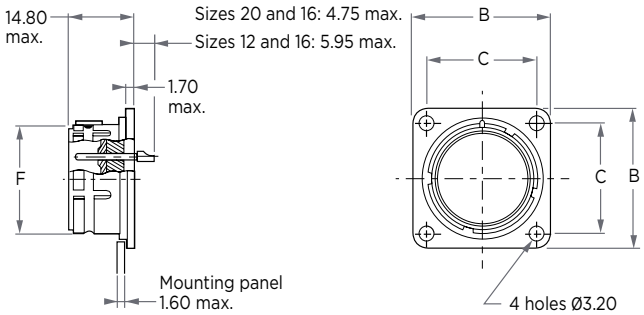

Part Number	B max	C ±0,1	F max	Part Number
DBA 70H-3-** P *	22.32	15.88	11.11	DBC 70H-3-** P *
DBA 70H-7-** P *	25.50	18.26	14.54	DBC 70H-7-** P *
DBA 70H-12-** P *	27.86	20.65	17.97	DBC 70H-12-** P *
DBA 70H-19-** P *	30.25	23.02	21.50	DBC 70H-19-** P *
DBA 70H-27-** P *	32.64	24.59	25.44	DBC 70H-27-** P *
DBA 70H-37-** P *	36.60	30.15	28.51	DBC 70H-37-** P *
DBA 70H-61-** P *	45.34	36.47	35.80	DBC 70H-61-** P *

Dimensions in mm

DBA / DBC 73H - Hermetic Solder Flange Receptacle

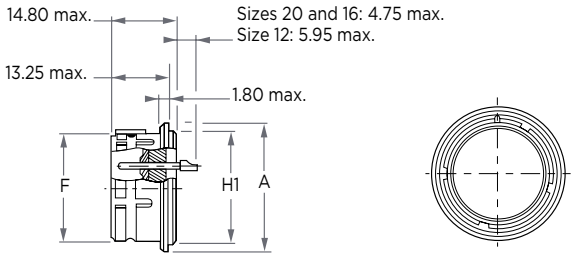

Part Number	A max	F max	H1 max	Part Number
DBA 73H-3-** P *	15.09	11.11	12.62	DBC 73H-3 ** P *
DBA 73H-7-** P *	19.10	14.54	15.80	DBC 73H-7 ** P *
DBA 73H-12-** P *	22.28	17.97	18.97	DBC 73H-12 ** P *
DBA 73H-19-** P *	25.45	21.50	22.96	DBC 73H-19 ** P *
DBA 73H-27-** P *	30.07	25.44	26.92	DBC 73H-27 ** P *
DBA 73H-37-** P *	32.59	28.51	29.28	DBC 73H-37 ** P *
DBA 73H-61-** P *	39.72	35.80	36.44	DBC 73H-61 ** P *

Dimensions in mm

DBA / DBC 74H - Hermetic Jam-Nut Mounting Receptacle

Part Number	A max	B max	F max	M max	Max. Nut Panel Tightening Torque	Part Number
DBA 74H-3 ** P *	19.53	18.58	11.11	15.97	0.70 daN.m	DBC 74H-3 ** P *
DBA 74H-7 ** P *	22.70	21.76	14.54	20.72	1.00 daN.m	DBC 74H-7 ** P *
DBA 74H-12 ** P *	25.77	24.93	17.97	23.90	1.30 daN.m	DBC 74H-12 ** P *
DBA 74H-19 ** P *	30.65	29.72	21.50	27.07	1.50 daN.m	DBC 74H-19 ** P *
DBA 74H-27 ** P *	33.83	32.88	25.44	31.34	1.80 daN.m	DBC 74H-27 ** P *
DBA 74H-37 ** P *	36.98	36.16	28.51	35.10	2.20 daN.m	DBC 74H-37 ** P *
DBA 74H-61 ** P *	48.23	47.29	35.80	42.97	2.90 daN.m	DBC 74H-61 ** P *

Dimensions in mm

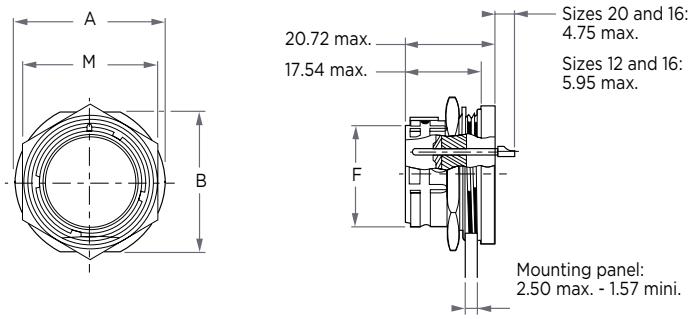

Panel sealing gasket to be ordered separately, see page 33. Panel cutout, see page 37.
O'ring to be ordered separately, see page 33. Panel cutout, see page 37.

DHS 70H - Hermetic Square Flange Receptacle Feedthrough

TYPE PP

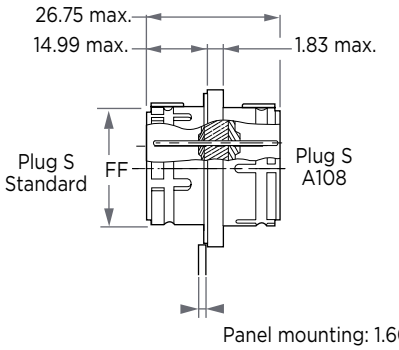

TYPE PS

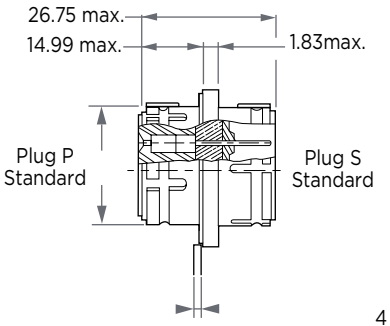

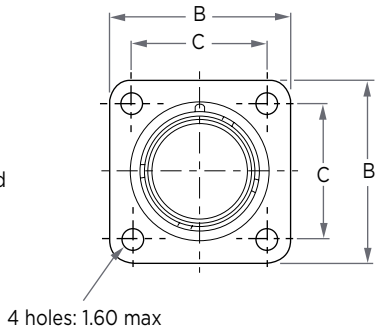

Part Number	B max	C ±0,1	F max	Part Number
DHS 70H-3-** PP *	22.65	15.88	11.20	DHS 70H-3-** PS *
DHS 70H-7-** PP *	25.85	18.26	14.63	DHS 70H-7-** PS *
DHS 70H-12-** PP *	28.20	20.65	18.03	DHS 70H-12-** PS *
DHS 70H-19-** PP *	30.60	23.02	21.56	DHS 70H-19-** PS *
DHS 70H-27-** PP *	32.95	24.59	25.50	DHS 70H-27-** PS *
DHS 70H-37-** PP *	36.95	30.15	28.60	DHS 70H-37-** PS *
DHS 70H-61-** PP *	48.65	36.47	35.91	DHS 70H-61-** PS *

Dimensions in mm

DHS 74H - Hermetic Jam-Nut Mounting Receptacle Feedthrough

TYPE PP

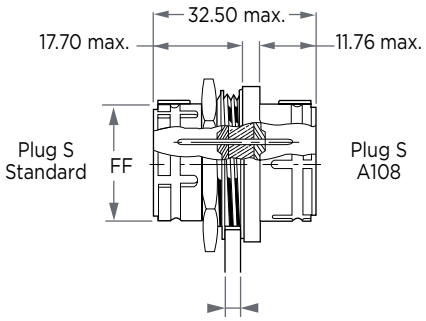

TYPE PS

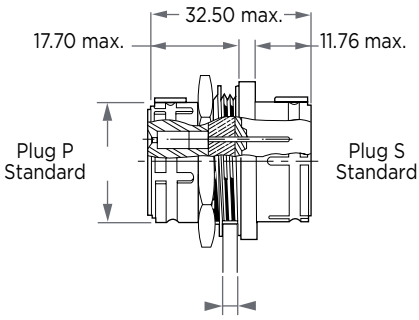

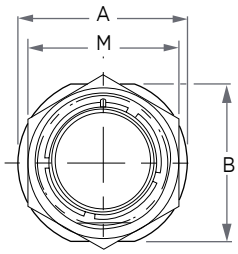

Part Number	A max	B max	F max	M max	Max. Nut Panel Tightening Torque	Part Number
DHS 74H-3-** PP *	19.81	18.84	11.20	15.87	0.70 daN.m	DHS 74H-3-** PS *
DHS 74H-7-** PP *	22.98	22.02	14.63	20.62	1.00 daN.m	DHS 74H-7-** PS *
DHS 74H-12-** PP *	26.16	25.19	18.03	23.79	1.30 daN.m	DHS 74H-12-** PS *
DHS 74H-19-** PP *	30.93	29.97	21.56	26.97	1.50 daN.m	DHS 74H-19-** PS *
DHS 74H-27-** PP *	34.11	33.14	25.50	31.75	1.80 daN.m	DHS 74H-27-** PS *
DHS 74H-37-** PP *	37.26	36.32	28.60	37.26	2.20 daN.m	DHS 74H-37-** PS *
DHS 74H-61-** PP *	48.51	47.59	35.91	42.87	2.90 daN.m	DHS 74H-61-** PS *

Dimensions in mm

Panel sealing gasket to be ordered separately, see page 33. Panel cutout, see page 37.
O'ring to be ordered separately, see page 33. Panel cutout, see page 37.

DBAS 171/172 – Savers

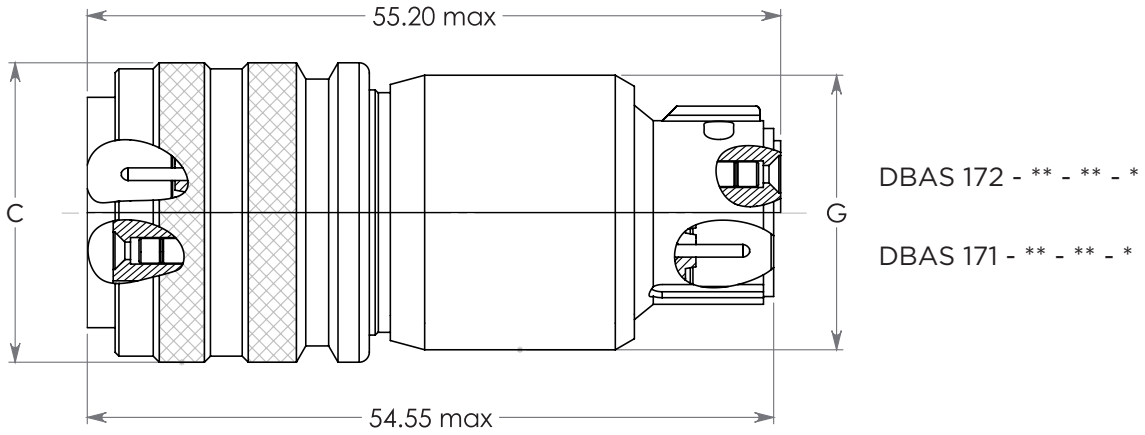

Part Number	Contact Type		C max	G max
	Plug Side	Receptacle Side		
DBAS 171-3-**-*	Socket	Pin	20.40	18.30
DBAS 171-7-**-*	Socket	Pin	23.70	21.90
DBAS 171-12-**-*	Socket	Pin	26.90	24.80
DBAS 171-19-**-*	Socket	Pin	31.50	28.40
DBAS 171-27-**-*	Socket	Pin	36.10	31.90
DBAS 171-37-**-*	Socket	Pin	39.30	35.10
DBAS 171-61-**-*	Socket	Pin	47.30	43.30
DBAS 172-3-**-*	Pin	Socket	20.40	18.30
DBAS 172-7-**-*	Pin	Socket	23.70	21.90
DBAS 172-12-**-*	Pin	Socket	26.90	24.80
DBAS 172-19-**-*	Pin	Socket	31.50	28.40
DBAS 172-27-**-*	Pin	Socket	36.10	31.90
DBAS 172-37-**-*	Pin	Socket	39.30	35.10
DBAS 172-61-**-*	Pin	Socket	47.30	43.30

Dimensions in mm

Accessories

Nut

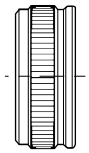

Size	Part Number
3	006-0909-03 A499
7	006-0909-12 A499
12	006-0909-14 A499
19	006-0909-16 A499
27	006-0909-18 A499
37	006-0909-20 A499
61	006-0909-61 A499

Straight Cable Clamp

Mod. 059

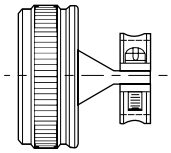

Size	Part Number
3	006-0910-03 A499
7	006-0910-12 A499
12	006-0910-14 A499
19	006-0910-16 A499
27	006-0910-18 A499
37	006-0910-20 A499
61	006-0910-61 A499

Elbowed Cable Clamp

Mod. 081

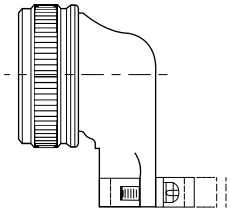

Size	Part Number
3	006-0908-03 A499
7	006-0908-12 A499
12	006-0908-14 A499
19	006-0908-16 A499
27	006-0908-18 A499
37	006-0908-20 A499
61	006-0908-61 A499

Potting Cup

Mod. 083

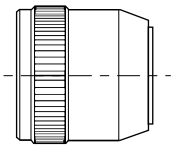

Size	Part Number
3	006-0701-03 A499
7	006-0701-12 A499
12	006-0701-14 A499
19	006-0701-16 A499
27	006-0701-18 A499
37	006-0701-20 A499
61	006-0701-61 A499

Adaptor

* Functional lengthening when using this adaptor.

Mod. A 140

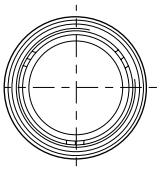

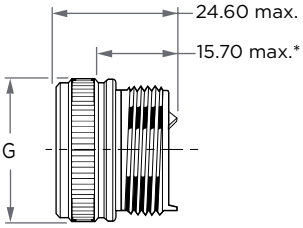

Size	Part Number	G max
3	006-0884-03 A499	17.00
7	006-0884-12 A499	21.80
12	006-0884-14 A499	25.00
19	006-0884-16 A499	28.25
27	006-0884-18 A499	30.95
37	006-0884-20 A499	34.15
61	006-0884-61 A499	42.00

Dimensions in mm

Size	Accessories Tightening Torques (± 10%)
3	0.36 daN.m
7	0.50 daN.m
12	0.60 daN.m
19	0.65 daN.m
27	0.70 daN.m
37	0.75 daN.m
61	0.95 daN.m

FOM-2007 – Tightening Fixture

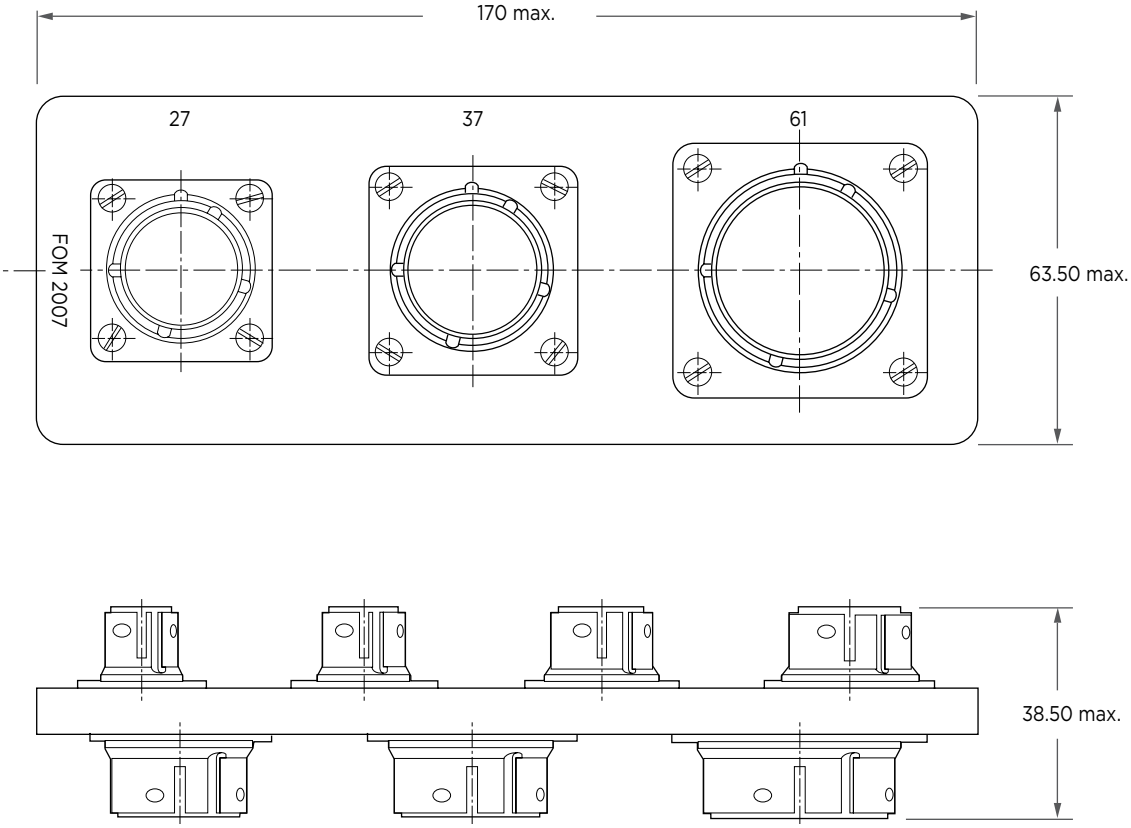

Dimensions in mm

Protective Caps

TYPE 70

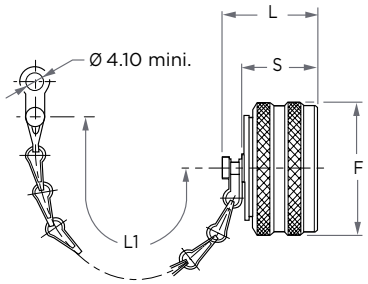

Part Number	F max	L max	L1 max	S max
DBAS C-70-3	20.40	20.45	79.00	16.95
DBAS C-70-7	23.70	20.45	95.00	16.95
DBAS C-70-12	26.90	20.45	95.00	16.95
DBAS C-70-19	31.50	20.45	95.00	16.95
DBAS C-70-27	36.10	20.45	95.00	16.95
DBAS C-70-37	39.30	20.45	111.00	16.95
DBAS C-70-61	47.30	20.45	111.00	16.95

Dimensions in mm

TYPE 71

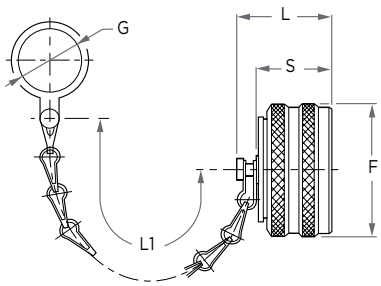

Part Number	F max	G mini	L max	L1 max	S max
DBAS C-71-3	20.40	14.60	20.00	79.00	16.85
DBAS C-71-7	23.70	19.30	20.00	95.00	16.85
DBAS C-71-12	26.90	22.50	20.00	95.00	16.85
DBAS C-71-19	31.50	25.50	20.00	95.00	16.85
DBAS C-71-27	36.10	27.35	20.00	95.00	16.85
DBAS C-71-37	39.30	30.40	20.00	111.00	16.85
DBAS C-71-61	47.30	38.40	20.20	111.00	17.05

Dimensions in mm

TYPE 74

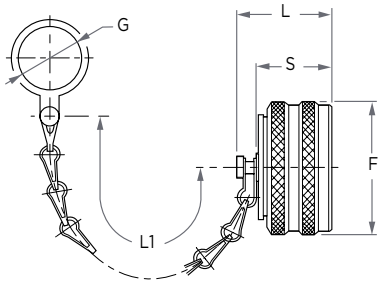

Part Number	F max	G mini	L max	L1 max	S max
DBAS C 74-3	20.40	14.60	20.45	79.00	16.95
DBAS C 74-7	23.70	17.70	20.45	95.00	16.95
DBAS C 74-12	26.90	20.90	20.45	95.00	16.95
DBAS C 74-19	31.50	25.70	20.45	95.00	16.95
DBAS C 74-27	36.10	28.90	20.45	95.00	16.95
DBAS C 74-37	39.30	32.00	20.45	111.00	16.95
DBAS C 74-61	47.30	38.40	20.45	111.00	16.95

Dimensions in mm

TYPE 76

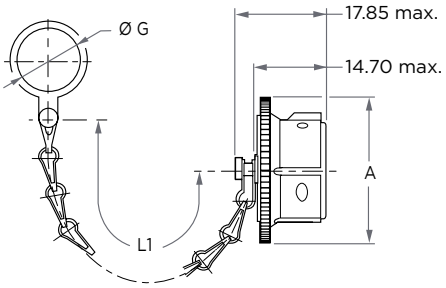

TYPE 76-70

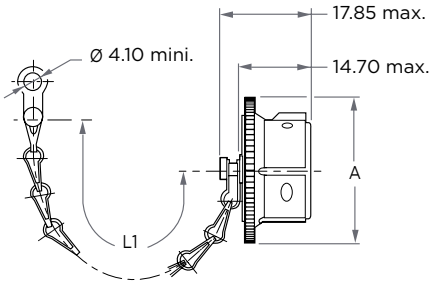

Part Number	A max	G mini	L1 max
DBAS C-76-3 DBAS C 76-70-3	18.50	14.60	79.00
DBAS C-76-7 DBAS C 76-70-7	22.80	18.85	95.00
DBAS C-76-12 DBAS C 76-70-12	27.20	22.10	95.00
DBAS C-76-19 DBAS C 76-70-19	30.60	25.50	95.00
DBAS C-76-27 DBAS C 76-70-27	34.55	27.35	95.00
DBAS C-76-37 DBAS C 76-70-37	37.85	30.40	111.00
DBAS C-76-61 DBAS C 76-70-61	46.45	38.40	111.00

Dimensions in mm

Note: Mod. A 134: Without chain.
A 190: Nylon wire.

Dummy Receptacle

DUMMY RECEPTACLE

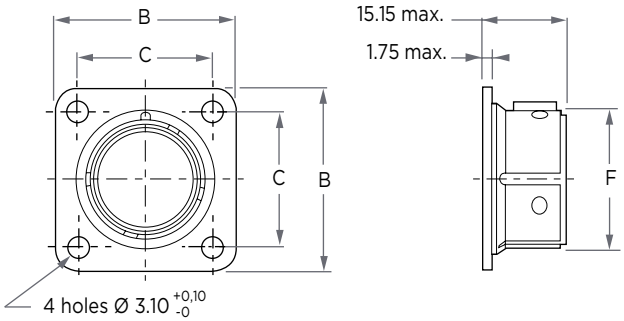

Size	Part Number	B max	C ±0,1	F max
3	DBAS 70 PR 3	22.60	15.90	11.25
7	DBAS 70 PR 7	25.80	18.26	14.65
12	DBAS 70 PR 12	28.20	20.62	18.05
19	DBAS 70 PR 19	30.60	23.02	21.60
27	DBAS 70 PR 27	33.00	24.58	25.55
37	DBAS 70 PR 37	36.90	30.12	28.65
61	DBAS 70 PR 61	45.70	36.48	35.95

Dimensions in mm
Only N position

Panel Sealing Gasket and O'ring for Receptacles

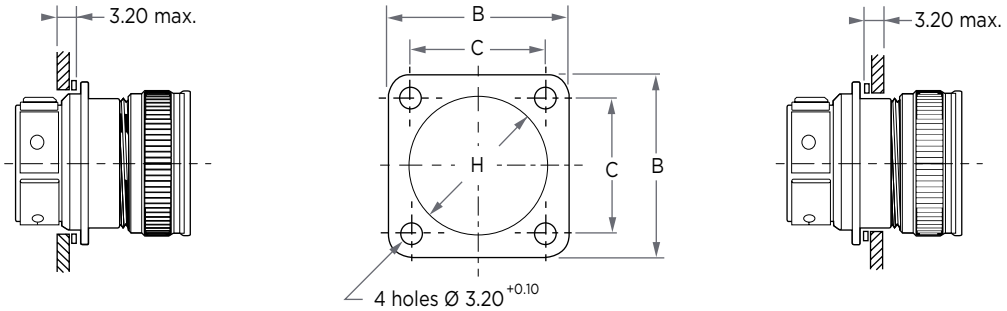

Front Flange Mounting			B max	C max	Rear Flange Mounting		
Size	Part Number	H max			H max	Part Number	Size
3	025-0001-03	14.80	22.50	15.90	14.80	025-0001-03	3
7	025-0001-07	17.70	25.70	18.26	18.80	025-0002-07	7
12	025-0001-12	21.10	28.10	20.62	22.00	025-0002-12	12
19	025-0001-19	24.30	30.50	23.02	25.10	025-0002-19	19
27	025-0001-27	29.00	32.80	24.58	27.50	025-0002-27	27
37	025-0001-37	32.30	36.80	30.12	30.50	025-0002-37	37
61	025-0001-61	40.20	45.50	36.48	38.50	025-0002-61	61

Dimensions in mm

O'ring

Size	Part number
3	103-0001-15
7	103-0001-17
12	103-0001-19
19	103-0001-22
27	103-0001-24
37	103-0001-26
61	103-0003-29

Leading Clips for Plugs and Protective Caps

For protective caps

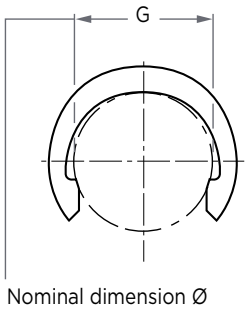

Size	Part Number
3	100-0065-03
7	100-0065-07
12	100-0065-12
19	100-0065-19
27	100-0009-27
37	100-0009-37
61	100-0065-61

For plugs

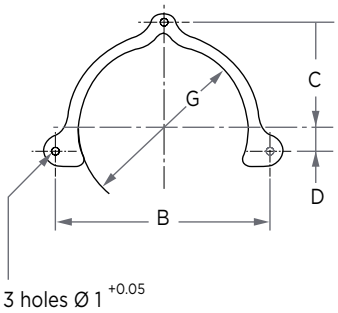

Size	Part Number	B ±0,1	C ±0,1	D ±0,1	G
3	025-0792-03	21.20	10.80	2.00	15.00
7	025-0792-07	24.00	12.30	2.40	17.50
12	025-0792-12	27.60	14.00	2.70	21.30
19	025-0792-19	32.00	16.20	3.25	25.00
27	025-0792-27	36.60	18.60	3.75	28.40
37	025-0792-37	39.60	20.20	4.00	31.10
61	025-0792-61	47.00	24.00	5.20	40.20

Dimensions in mm

Cable Clamp Sleeves

Size	Main Bushings	Middle Bushings		
03	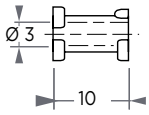 006-0005-08			
07	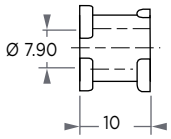 006-0005-12	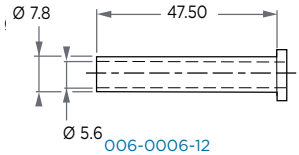 006-0006-12		
12	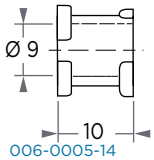 006-0005-14	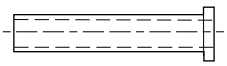 006-0005-14		
19	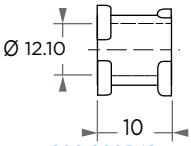 006-0005-16	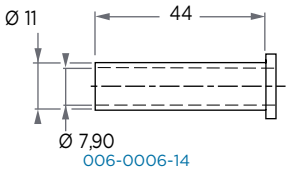 006-0006-14	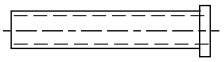 006-0006-12	
27	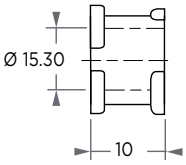 006-0005-18	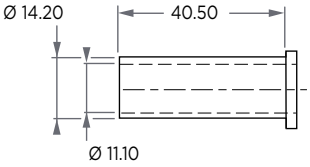 006-0006-18	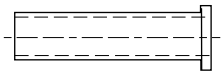 006-0006-14	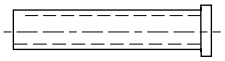 006-0006-12
37	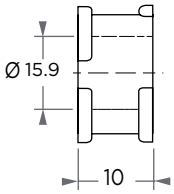 006-0005-20	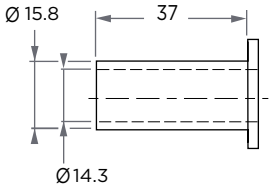 006-0005-20	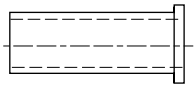 006-0006-18	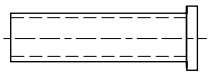 006-0006-14
61	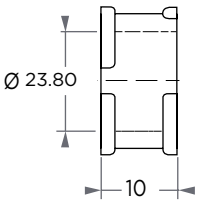 006-0005-61	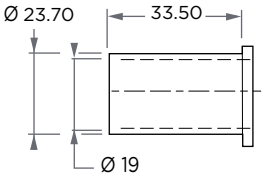 006-0006-24	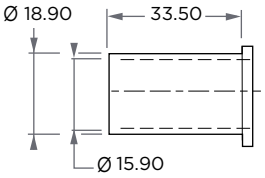 006-0006-22	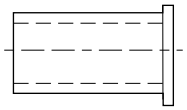 006-0006-20

Mating - Unmating Dimensions

Mating DBAS 76 with 70

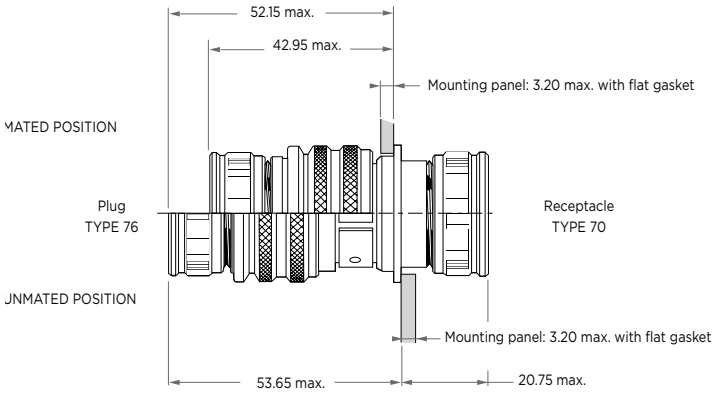

Dimensions in mm

Mating DBAS 76 with 74

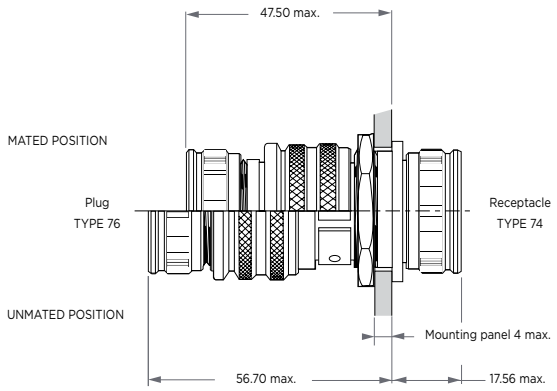

Dimensions in mm

Mating DBAS 79 with 70

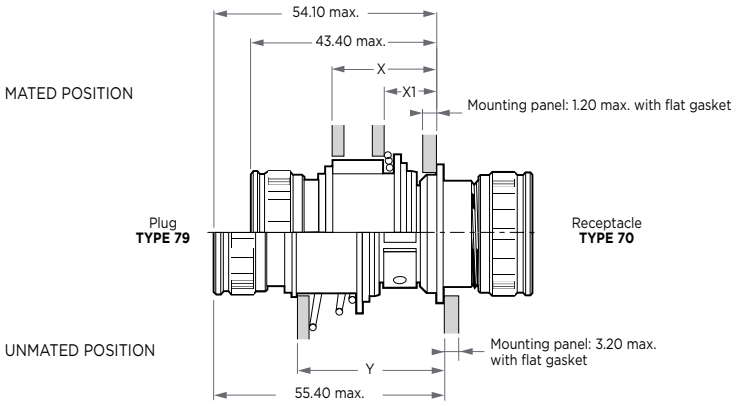

Dimensions in mm

Mating DBAS 79 with 74

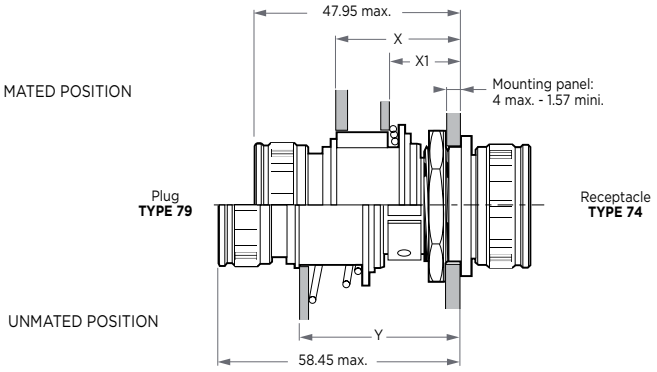

Dimensions in mm

Panel Cutout

For Sealed and Hermetic Receptacles

Square flange

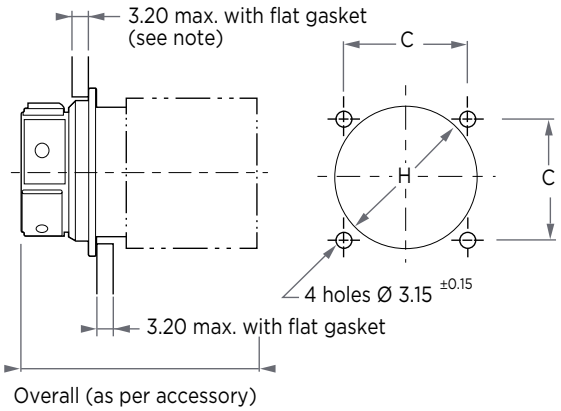

Jam-nut mounted

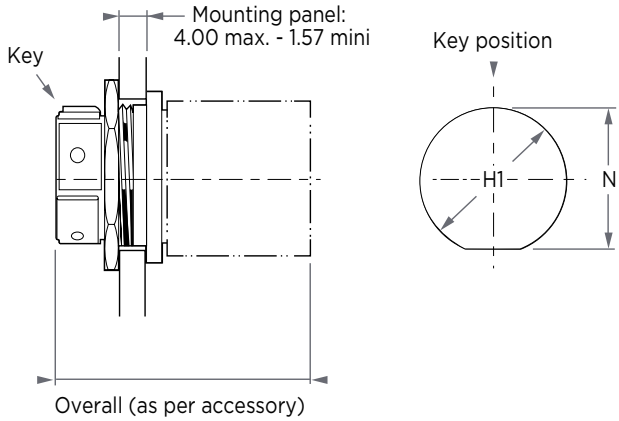

Note: For utilization on rack connectors, see page 40.

For Sealed Receptacle

Rack and panel connector

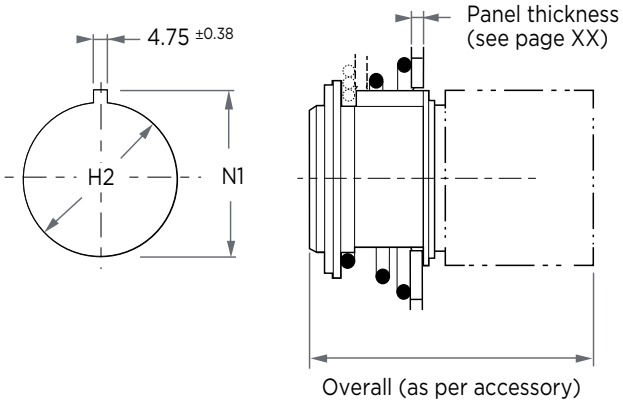

For Hermetic Receptacle

Solder flange

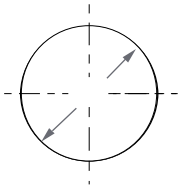

Size	C ± 0.1	H + 0 - 0.2	H1 + 0.2 - 0	H2 ± 0.38	H3 max.	N +0.1 - 0	N1 +0.1 ± 0.38
3	15.90	14.80	14.40	17.04	14.40	13.56	21.41
7	18.26	19.40	17.55	20.62	17.55	16.79	24.99
12	20.62	22.60	20.73	23.80	20.73	19.91	27.96
19	23.02	25.75	25.48	26.97	25.48	24.61	31.34
27	24.58	28.95	28.65	30.56	28.65	27.81	34.92
37	30.12	32.35	31.83	34.92	31.83	30.99	38.89

Dimensions in mm

Mating – Unmating Forces

Shell Ssize	Maximum Mating - Unmating Force		Minimum Unmating Force	
	Push-Pull	Rack and Panel	Push-Pull	Rack and Panel
3	6.8	8.01	0.56	0.06
7	8.9	8.90	0.66	0.15
12	15.1	16.90	0.89	0.25
19	16.9	20.46	1.33	0.40
27	17.8	20.46	1.78	0.56
37	19.6	22.24	2.69	0.77
61	21.8	30.25	3.11	0.94

DBAS 78GR, Minimum unmating force for sizes 03 and 07: 3,5 daN. for sizes 12 to 61: daN. (More than standard specification SAE/AS 81703).

Mass

Connectors weight in gram ±5 gr, without nut and contacts.

Size	Type	Shells Types				
		70/71	74	76	78	79
3	P	7.10	10.60	16.70	23.20	12.05
	S	8.20	11.11	17.70	24.20	13.50
7	P	12.05	13.15	21.88	28.88	19.68
	S	12.85	13.95	22.88	29.88	20.68
12	P	15.95	17.91	28.80	35.90	26.30
	S	17.10	19.00	29.90	36.90	27.30
19	P	19.80	22.10	38.05	45.05	31.55
	S	21.95	24.26	40.05	47.05	33.55
27	P	24.30	27.66	46.90	53.90	36.40
	S	27.25	30.60	49.90	56.90	39.40
37	P	27.50	33.15	53.92	60.92	48.22
	S	33.90	37.00	57.92	64.92	52.22
61	P	45.95	53.52	76.38	82.38	72.58
	S	52.65	60.22	82.38	88.38	78.58

P male contact
S female contact

DEUTSCH DBAS Series Connectors

Contacts

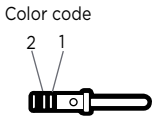

Male Contact

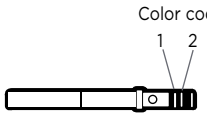

Female Contact

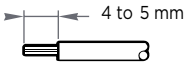

Wires Strip Length

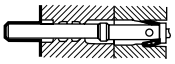

Connector Rear Face

CONTACTS							CABLES				SEALING PLUG	
New	Type	Size	Indice	Color Code 1	Color Code 2	Color Code Marking	Observations	Section in	AWG Wire	Ø Over Sheath	Part Number	Color Code
028-0108-22 028-0113-22	P S	22	—	Green	—	—	—	0.15 to 0.38	22 - 26	0.71 to 1.25	028-0102-22	Yellow
006-0937-20 006-0912-20	P S	20	—	Red	Red	—	—	0.22 to 0.60	20 - 24	1.01 to 2.10	006-0893-20	Red
006-0972-20 006-0973-20	P S	20	—	Red	—	—	Reduced bucket contact	0.055 to 0.15	26 - 30	1.01 to 2.10	006-0893-20	Red
006-0044-20 006-0055-20	P S	20	—	Red	Brown	—	Enlarged bucket contact	0.22 to 0.93	18 - 24	1.01 to 2.10	006-0893-20	Red
006-1186-20 006-1187-20	P S	20	—	Red	—	Yellow point	Contact KP-NiCr	0.22 to 0.60	20 - 24	1.01 to 2.10	006-0893-20	Red
025-0404-20 025-0405-20	P S	20	—	Red	Brown	Yellow point	Contact KP-NiCr	0.38 to 0.93	18 - 22	1.01 to 2.10	006-0893-20	Red
006-1188-20 006-1189-20	P S	20	—	Red	Red	Black point	Contact KN-NiAl	0.22 to 0.60	20 - 24	1.01 to 2.10	006-0893-20	Red
025-0402-20 025-0403-20	P S	20	—	Red	Brown	Black point	Contact KN-NiAl	0.38 to 0.93	18 - 22	1.01 to 2.10	006-0893-20	Red
006-1060-20 006-1062-20	P S	20	—	Marking Co.			Contact co.	0.22 to 0.60	20 - 24	1.01 to 2.10	006-0893-20	Red
025-0406-20 025-0407-20	P S	20	—	Red	Purple	Marking Co.	Contact co.	0.38 to 0.93	18 - 22	1.01 to 2.10	006-0893-20	Red
006-0937-16 006-0912-16	P S	16	—	Blue	Blue	—	—	0.60 to 1.34	16 - 20	1.35 to 2.62	006-0893-16	Red
006-1102-16 006-1104-16	P S	16	—	Blue	Orange	—	Enlarged Bucket contact	1.91	14	1.35 to 2.62	006-0893-16	Blue
025-0870-16 025-0871-16	P S	16	—	Blue	White	—	Reduced bucket contact	0.055 to 0.15	26 - 30	1.35 to 2.62	006-0893-16	Blue
006-0937-12 006-0912-12	P S	12	—	Yellow	Yellow	—	—	1.91 to 3.18	12 - 14	2.51 to 4.01	006-0892-12	Yellow
006-1157-12 006-1159-12	P S	12	—	Yellow	Blue	—	Reduced bucket contact	0.60 to 1.34	16 - 20	2.51 to 4.01	006-0892-12	Yellow
005-0893-08 005-0896-08	P S	8	8	—	—	—	Solder contact	5.30 to 8.98	8 - 10	3.80 to 5.15	006-0893-08	Green
005-0257-08 005-0258-08	P S	8	87	Red	Brown	—	Reduced bucket contact	5.30	10	3.80 to 5.15	006-0893-08	Green
006-0041-08 006-0040-08	P S	8	88	Red	—	—	—	8.98	8	3.80 to 5.15	006-0893-08	Green

Standard contacts delivered with connector

Note: According to ISO 8843 norm, it is possible to have only one band, only if the colour of bands 1 and 2 is identical.

Tools

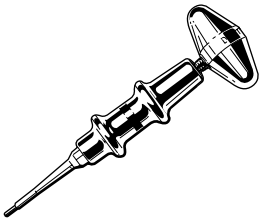

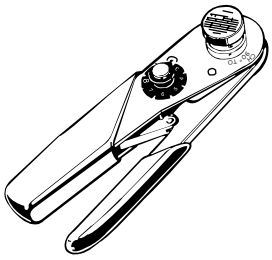

TOOLS				
Insertion and Extraction Tool, Wired Contacts	Extraction Tool Non Wired Contacts		Crimping Tool	
	Part Number	Alternate End	Part Number	Turret Had Part Number
028-0114-22	—	—	057-0463-12	057-0470-32
006-0902-20	057-0481-60	057-0502-60	057-0461-11	057-0462-21
006-0902-20	057-0481-60	057-0502-60	057-0463-12	057-0464-32
006-0902-20	057-0481-60	057-0502-60	057-0461-11	057-0462-21
006-0902-20	057-0481-60	057-0502-60	057-0461-11	057-0462-21
006-0902-20	057-0481-60	057-0502-60	057-0461-11	0579-0462-21
006-0902-20	057-0481-60	057-0502-60	057-0461-11	057-0462-21
006-0902-20	057-0481-60	057-0502-60	057-0461-11	057-0462-21
006-0902-20	057-0481-60	057-0502-60	057-0461-11	057-0462-21
006-0902-20	057-0481-60	057-0502-60	057-0461-11	057-0462-21
006-0902-16	057-0481-60	057-0499-60	057-0461-11	057-0462-21
006-0902-16	057-0481-60	057-0499-60	057-0461-11	057-0462-21
006-0902-16	057-0481-60	057-0499-60	057-0461-11	057-0462-21
006-0902-16	057-0481-60	057-0500-60	057-0461-11	057-0462-21
006-0902-16	057-0481-60	057-0500-60	057-0461-11	057-0462-21
006-0902-08	057-0616-60	—	Soldered	—
006-0902-08	057-0616-60	—	057-0486-15	057-0065-00
006-0902-08	057-0616-60	—	057-0486-15	057-0065-00

DEUTSCH DBAS Series Connectors

Coax

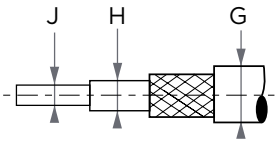

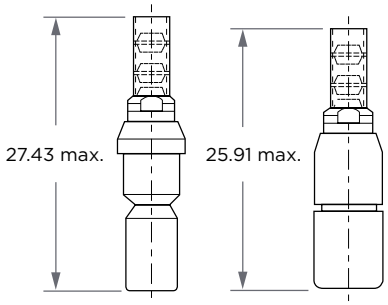

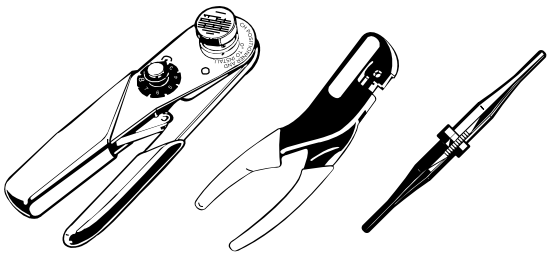

CABLES				CONTACTS			TOOLS				
Part Number	G max	H max	J max	COAX	MALES	FEMALES	Crimping tool			Tools	
				Index	Part Number Complete Contact	Part Number Complete Contact	Inter Contact	Crimping Pilot Stop	Sleeve	Insertion	Extraction
RG 179/U RG 187/U	2.95	1.52	0.76	Without sans	005-0920-00	005-0921-00	057-0463-12	057-0513-32	057-0519-05	006-0902-08	K 22-3 RG 161/U RG 174/U RG 178/U RG 178 A/U 006-0902-08 RG 188/U RG 196/U 1709-6
RG 195/U	3.94	2.62	0.76	1	005-0919-00	005-0914-00	057-0463-12	057-0513-32	057-0518-05	006-0902-08	RG 180/U 057-0616-60
Spécial	2.95	1.52	0.97	9	005-0913-00	005-0922-00	057-0463-12	057-0513-32	057-0519-05	006-0902-08	006-0902-08
50 PPDT	3.90	2	0.70	F1	005-0065-00	005-0066-00	057-0463-12	057-0513-32	057-0518-05	006-0902-08	057-0616-60
Double braid	5.50	3.04	097	F7	005-0983-00	005-0984-00	057-0463-12	057-0513-32	057-0520-05	006-0902-08	RG 223/U 057-0616-60
1709/33	2.85	1.75	0.70	F8	005-1364-00	005-1365-00	057-0463-12	057-0513-32	057-0518-05	006-0902-08	057-0616-60
66856	4.20	3.00	0.97	F9	005-1445-00	005-1446-00	057-0463-12	057-0513-32	057-0518-05	006-0902-08	057-0616-60

Dimensions in mm

Standards contacts delivered with connector.

For wiring of coax contacts please use the directions for wiring NC 025 011.

Micro coax size 16

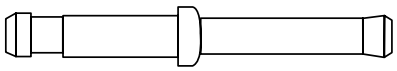

Female Contact

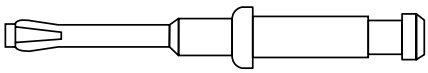

Male Contact

CONTACTS			CRIMPING			TOOLS
Coax Wire Used	Part Number	Type	Contact	Crimping Tool	Positioner	Wired Contacts Insertion/Extraction Tools
RG 196 A/U RG 178 B/U	025-0847-00	P	Inner Outer	057-0463-12 057-0461-11	057-0462-21	057-0517-32 006-0902-16
RG 196 A/U RG 178 B/U	025-0848-00	S	Inner Outer	057-0463-12 057-0461-11	057-0462-21	057-0517-32 006-0902-16

Wiring NC 025 071.

Micro Coax Size 12

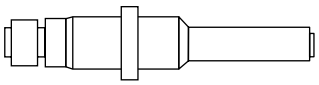

Male Contact

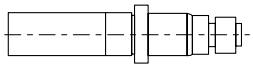

Female Contact

Coax Wire Used	Part Number P Complete Contact	Part Number S Complete Contact	Crimping Tool	Positioner	Sleeve Crimping Tool	Insertion/ Extraction Tool
Shielded	006-1082-00	006-1080-00	057-0463-12	057-0524-32	057-0520-05	006-0902-12
RG 180 B RG 195 A	006-1089-00	006-1091-00	057-0463-12	057-0524-32	057-0520-05	006-0902-12
Shielded RG 174 RG 188 A	006-1092-00	006-1093-00	057-0463-12	057-0524-32	057-0520-05	006-0902-12
Shielded 28-30 RG 178 B	006-1094-00	006-1095-00	057-0463-12	057-0524-32	057-0520-05	006-0902-12
RG 187 A RG 196 A	006-1097-00	006-1096-00	057-0463-12	057-0524-32	057-0520-05	006-0902-12
F 1703-66	006-1183-00	006-1184-00	057-0463-12	057-0524-32	057-0520-05	006-0902-12

Wiring NC 025 041.

Size 6 Bifilar

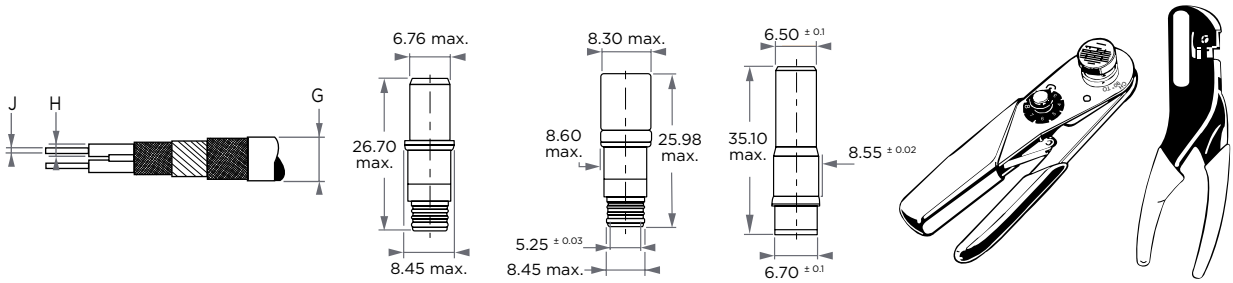

CABLES					CONTACTS					TOOLS			
					Complete Contacts Part Number			Sealing Plug					
Core								Part Number		Crimping Tool			Extraction Tool
Color	Size	G max	H	J max	Indice	Males	Female	For P and S	Color	Inner Contact	Locator	Sleeve	
F 2709/9 F 2709/12	22 20	4.80 5.35	1.68 2.03	0.80 1	Without	025-0709-01	025-0710-01	025-0689-06	Blue	057-0463-12	057-0470-32	057-0088-00	025-0711-06
F 2709/3 17/176-00002	24	4.05 2.59	1.37 1.12	0.60	M4	025-0925-00	025-0926-00	025-0689-06	Blue	057-0463-12	057-0470-32	057-0088-00	025-0711-06

Dimensions in mm

Standard contacts delivered with connector. .

For wiring of coax contacts please use the directions for wiring NC 025 011.

COAX BRAID NUT

DBA - DBC

For Hermetic Coax

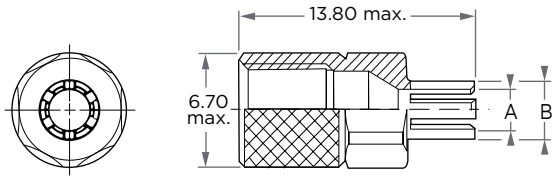

Index	Cable	Part Number	A max	B max	Allowed Wire External
	RG 178/U	14.60	20.45	79.00	DBAS C 74-3
Without	RG 179/U	046-0006-01	2.50	3.50	140 to 2.70
	RG 196/U	20.90	20.45	95.00	DBAS C 74-12
	RG 174/U	25.70	20.45	95.00	DBAS C 74-19
4	RG 187/U	046-0006-02	3.00	4.00	2.70 to 2.90
	RG 188/U	32.00	20.45	111.00	DBAS C 74-37
	RG 180/U	38.40	20.45	111.00	DBAS C 74-61
1	RG 195/U	046-0006-03	4.20	5.20	3.40 to 3.90
5	RG 141/U	046-0006-04	5.05	6.10	4.50 to 5.00

Wiring instruction.
NC 025-031.

Dimensions in mm

Section 2: DEUTSCH DBAS 7 - ESA/SCC QPL

Highest Reliability
- European Space Agency (ESA) / Space Components Coordination Group (SCC) Qualified Parts List (QPL)
- Improved traceability
- Improved Quality insurance
- Additional in-process and final inspections screening of parts

Large Range of Qualified Parts
- All shell types and sizes of DBAS 7 series sealed versions
- With or without grounding option on plugs
- Nickel
- ESA/SCC qualified crimp contacts size 8 to size 22 and accessories

Connection Reliability
- Visual and sensitive locking (blind mating)
- Double keying system to help prevent any cross connection
- Leading clip to help prevent any accidental unmating on demand
- Interface and individual wire sealing

DEUTSCH DBAS Series SCC

Highest Reliability
- European Space Agency (ESA) / Space Components Coordination Group (SCC) Qualified Parts List (QPL)
- Improved traceability
- Improved Quality insurance
- Additional in-process and final inspections screening of parts

Large Range of Qualified Parts
- All shell types and sizes of DBAS 7 series sealed versions
- With or without grounding option on plugs
- Nickel
- ESA/SCC qualified crimp contacts size 8 to size 22 and accessories

Connection Reliability
- Visual and sensitive locking (blind mating)
- Double keying system to help prevent any cross connection
- Leading clip to help prevent any accidental unmating on demand
- Interface and individual wire sealing

	ESCC Specification*	Qualification Status*
CONNECTORS, ELECTRICAL, NON-FILTERED, CIRCULAR AND RECTANGULAR	ESA/SCC Generic Specification No. 3401	NA
DBAS sealed receptacles	ESCC Detail Specification No. 3401/008	Qualified
DBAS plugs	ESCC Detail Specification No. 3401/008	Qualified
Contacts for DBAS sealed receptacles and plugs, size 8 to size 20	ESCC Detail Specification No. 3401/009	Qualified
Contacts for DBAS sealed receptacles and plugs, size 22	ESCC Detail Specification No. 3401/012	Qualified
DBA stainless steel hermetic receptacle	ESCC Detail Specification No. 3401/023	According to Detail Specification
DBC hermetic receptacle	ESCC Detail Specification No. 3401/043	According to Detail Specification performances
DBAS savers type 171 / 172	ESCC Detail Specification No. 3401/033	According to Detail Specification
Accessories for DBAS sealed receptacles and plugs	ESCC Detail Specification No. 3401/064	Qualified

* European Space Components Coordination (ESCC). Latest specifications editions and qualification status are available at https://escies.org

Technical Characteristics

Mechanical

Shell	Material	Sealed version Hermetic version	Aluminum alloy DBC: Steel DBA: Stainless steel	
	Plating	Sealed version Hermetic version	Standard: Nickel DBC: Tin over nickel plating	
RFI ring	Material Plating		Beryllium copper Nickel	
Insert	Material	Sealed version Hermetic version	Fluorinated silicone and thermosetting resin Glass insert, thermosetting resin, fluorinated silicone	
	Outgassing		Meets ECSS-Q-ST-70-02C requirements RML < 1,0 % CVCM < 0,10%	
Contact	Type	Sealed version Hermetic version	Crimp type DBC - DBA: Soldered bucket	
	Plating	Sealed version Hermetic version	Gold over nickel DBC – DBA: Gold	
Insert contact retention			Size 22: 4,0 daN Size 20: 7,0 daN Size 16: 11,6 daN	Size 12: 11,6 daN Size 8: 11,6 daN Size 6: 11,6 daN
Vibrations			Sinusoidal: 20 G, 10- 2000 Hz, during 90 minutes (30 minutes on the 3 axis) Random: Acceleration Spectral Density (ASD) of 0.2g²/Hz, 20 to 2000 Hz, during 90 minutes (30 minutes on the 3 axis)	
Physical shocks		Sealed and Hermetic version	100 G, during 11 ms, half-sine wave in the 3 axes	
Durability		Sealed and Hermetic version	500 full mating / unmating cycles 250 full mating / unmating cycles for plugs with RFI fingers	
Pressure insert retention		Hermetic version	30 to 70 bars	
Sealing		Hermetic version	Less than 10^{-8} cm³/s of helium under 10^{-6} Torr vacuum	

Environmental conditions

Service temperature		- 65° C to + 200° C	
Thermal shocks		5 cycles of - 65° C to + 200° C	
Corrosion	Sealed and Hermetic version	Withstands 96 hours of salt spray	

Electrical

Working Voltage		At sea level At 33 000 m	Contacts Size 20, 16, 12, 08: 375 V_{rms} 200 V_{rms}	Contacts Size 22: 250 V_{rms}
Voltage Proof - Leakage Current			≤ 2.0 mA under 1 500 V	
Insulation resistance		Sealed version Hermetic version	≥ at 10 000 MΩ at 25° C and 60% R.H. ≥ at 5 000 MΩ at 25° C and 60 % R.H.	
Mated shell conductivity	Plugs with RFI fingers	Sealed version Hermetic version	≤ 5 mΩ ≤ 50 mΩ	
Contact maximum current		Sealed version Hermetic version	Size 22: 2,5 to 5 A Size 20: 2,5 to 7,5 A Size16: 7,5 to 13 A Size 20: 5 A Size 16: 10 A	Size 12: 13 to 25 A Size 8: 32 to 46 A Size 12: 17 A Size 8: 33 A

Synoptic

ACCESSORIES
ESCC 3401-064

Nut

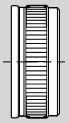

006-0910-XX
Straight cable clamp

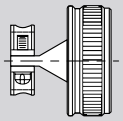

006-0908-XX
Elbowed cable clamp

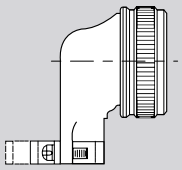

006-0701-XX
Potting cup

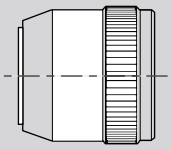

PLUG
ESCC 3401-008

DBAS 76 Feel-control locking plug

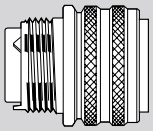

DBAS 78 Plug with heavy duty lanyard

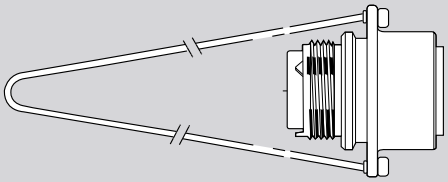

RACK & PANEL CONNECTOR

DBAS 79 Rack and Panel

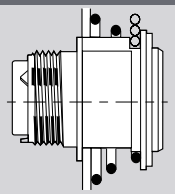

PROTECTIVE CAPS

DBAS C-70
DBAS C-71
DBAS C-74
For receptacles

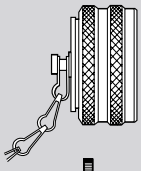

DBAS C-76
DBAS C-76-70
DBAS C-74
For plugs DBAS 76 / DBAS 78

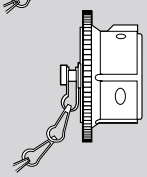

HERMETIC FEEDTHROUGH

DHS 70H Square flange 4 holes mounting

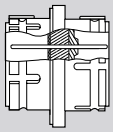

DEUTSCH DBAS Series SCC

RECEPTACLES
ESCC 3401-008

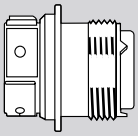

DBAS 70 Square flange 4 holes mounting

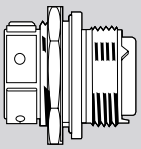

DBAS 74 Jam-nut mounted receptacle

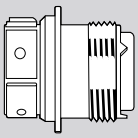

DBAS 71 Cable connecting receptacle

HERMETICAL RECEPTACLES

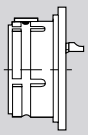

DBA 70H
DBC 70H Square flange 4 holes mounting

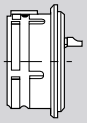

DBA 73H
DBC 73H Solder flange

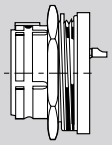

DBA 74H
DBC 74H Jam-nut mounted receptacle

DUMMY RECEPTACLE

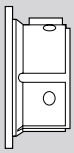

DBA 70 PR Square flange 4 holes mounting

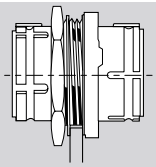

DHS 74H Jam-nut mounted receptacle

SAVERS

DBAS 172 / DBAS 171

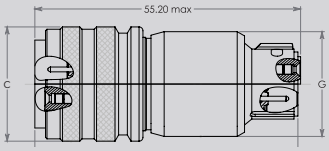

DEUTSCH DBAS Series SCC

Part Numbering System

	DBAS	76	G	27	13	P	N**	DA	090	****	SCC

Connector type

Shell type
70 Square flange receptacle with nut
71 Cable connecting receptacle with nut
74 Jam-nut mounting receptacle with nut
76 Feel-control locking plug with nut
78 Plug with heavy duty lanyard and nut
79 Rack and panel with nut

Grounding continuity index (*only for plugs*)
Without Index: no RFI fingers on shells 76 - 78 – 79
With G Index: with RFI fingers on shells 76 - 78 - 79

Shell size
3-7-12-19-27-37-61

Arrangements
(See page 52-53)

Contact type
P Pin contact
S Socket contact

Insert clocking position
N Normal
W - X - Y - B - C
Others (See page 50)

Key orientation (Except 79)
(See page 51)

Mandatory mode code *
(see page 51)

Special modifications
(See page 53)

ESA space grade

*ESA grade sealed connectors are delivered without contact and can be delivered only with nut. For other accessory, please indicate mod code “090-1A” instead of “090” on connector part number and order requested accessory separately.

Part Numbering System

DBA	70	H	27	2	P	N**	1	DA	****	SCC

Connector type
DBA Stainless steel hermetic receptacle, solder contact
DBC Hermetic receptacle, solder contact
DHS Feedthrough

Shell type
70 Square flange receptacle
73 Solder flange receptacle
74 Jam-nut mounted receptacle

Hermetics

Shell size
3-7-12-19-27-37-61

Arrangements
(See page 52-53)

Contact type
P Pin contact

Insert clocking position
N Normal
W - X - Y - B - C Others
(See page 50)

Index for contacts*
(See page 39, 41-42)

Key Orientation
(See page 51)

Special modifications
(See page 53)

ESA space grade

Insert Clocking Position

Clocking position is normal (N) when the insert vertical axis is intermingled with the shell keyway axis. An unkeying can be performed between 2 connectors of same layout by angular displacement of one of the inserts in its shell. This insert rotation is made in the clockwise for male layouts and in the counter clockwise for female layouts. Angular displacements on the hereafter table give clocking position W, X, Y, B or C.

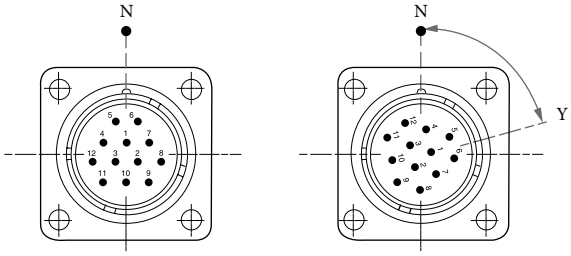

Normal position

Position Y

Example of insert angular displacement, male front face view

Arrangements	Clocking Position in Degrees					Contacts Sizes						Service
	W	X	Y	B	C	22	20	16	12	8	6	
3-0	25	50	75	150	220	—	3	—	—	—	—	I
3-01	—	—	—	—	—	—	—	—	—	1	—	—
7-0	27.30	47.30	75	150	225	—	7	—	—	—	—	I
12-0	15	50	75	150	225	—	12	—	—	—	—	I
19-0	25	50	75	150	225	—	19	—	—	—	—	I
19-2	25	50	75	150	225	—	9	—	—	2	—	I
19-4	—	—	22°30	135	247°30	—	—	—	4	—	—	I
19-7	—	—	75	150	225	—	—	—	7	—	—	I
19-12	25	50	75	150	225	—	—	12	—	—	—	I
27-0	25	50	75	150	225	—	27	—	—	—	—	I
27-2	25	50	75	150	225	—	—	14	—	—	—	II
27-8	25	50	75	150	225	—	—	6	4	—	—	I
27-13	25	50	75	150	225	—	12	—	—	3	—	I
37-0	25	50	75	150	225	—	37	—	—	—	—	I
37-3	20	70	75	—	—	—	—	—	12	—	—	I
37-13	—	—	75	150	225	—	30	—	—	1	—	I
37-19	25	50	75	150	225	—	13	—	—	6	—	I
37-27	—	—	75	150	225	—	6	—	—	7	—	I
37-30	25	50	75	150	225	—	20	—	—	4	—	I
37-924	105	13	—	—	—	—	—	24	—	—	—	I
37-961	—	—	—	—	—	61	—	—	—	—	—	—
61-0	25	50	75	150	225	—	61	—	—	—	—	I
61-5	25	50	75	150	225	—	49	—	—	2	—	I
61-14	25	50	75	150	225	—	—	37	—	—	—	—
61-21	25	50	75	150	225	—	—	—	—	12	—	I
61-42	—	67°30	—	—	—	—	29	4	8	—	—	—
61-929	—	—	—	—	—	—	15	8	—	6	—	—
61-949	25	50	75	150	225	—	46	—	—	3	—	

Key Orientation

Receptacle front face view

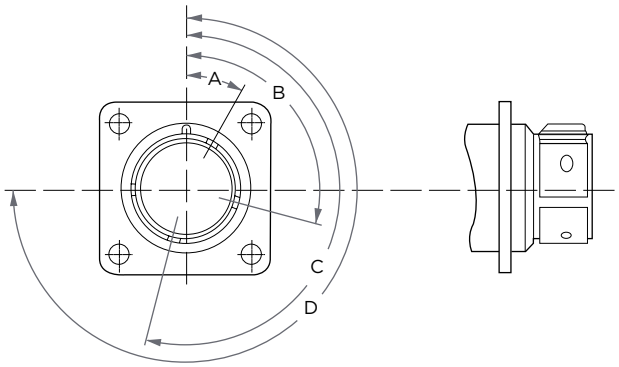

Plug front face view

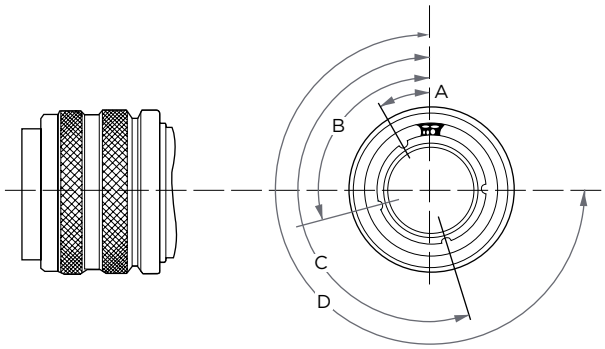

Angles Size	3				7				12				19				27				37				61			
	A	B	C	D	A	B	C	D	A	B	C	D	A	B	C	D	A	B	C	D	A	B	C	D	A	B	C	D
Standard	23	97	187	—	23	97	187	277	30	105	195	270	30	105	195	270	30	105	195	270	30	105	195	270	30	105	195	270
DA	—	—	—	—	23	105	195	300	30	90	225	315	40	105	195	270	40	105	195	270	40	105	195	270	40	105	195	270
DB	—	—	—	—	23	115	210	285	30	120	210	285	30	115	195	270	30	115	195	270	30	115	195	270	30	115	195	270
DC	—	—	—	—	30	120	195	285	30	135	180	300	30	115	210	270	30	115	210	270	30	115	210	270	30	115	210	270
DD	—	—	—	—	30	97	210	270	45	105	210	315	30	115	195	280	30	115	195	280	30	115	195	280	30	115	195	280
DE	—	—	—	—	—	—	—	—	45	90	180	285	—	—	—	—	—	—	—	—	30	90	170	270	30	90	170	270
DF	—	—	—	—	—	—	—	—	45	120	270	300	—	—	—	—	—	—	—	—	30	115	170	255	30	115	170	255
DG	—	—	—	—	—	—	—	—	45	135	195	225	—	—	—	—	—	—	—	—	30	115	180	300	30	115	180	300

Arrangements

Male insert viewed from front face

3-0 3 contacts size 20 *

3-01 1 contact size 8 *

7-0 7 contacts size 20 *

12-0 12 contacts size 20 *

19-0 19 contacts size 20 *

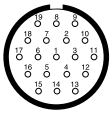

19-2 9 contacts size 20
2 contacts size 8 *

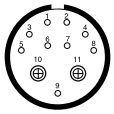

19-4 4 contacts size 12 *

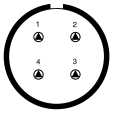

19-7 7 contacts size 12 *

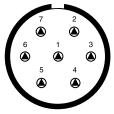

19-12 12 contacts size 16 *

27-0 27 contacts size 20 *

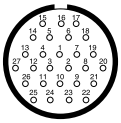

27-2 14 contacts size 16 *

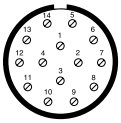

27-8 6 contacts size 16
4 contacts size 12

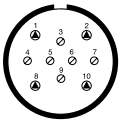

27-13 12 contacts size 20
3 contacts size 8

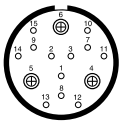

37-0 37 contacts size 20 *

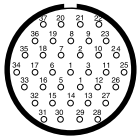

37-3 12 contacts size 12 *

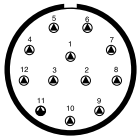

37-13 30 contacts size 20
1 contact size 8 *

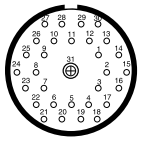

37-19 13 contacts size 20
6 contacts size 8 *

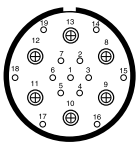

37-27 6 contacts size 20
7 contacts size 8 *

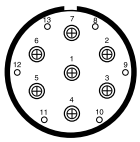

37-30 20 contacts size 20
4 contacts size 8 *

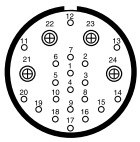

37-924 24 contacts size 16 *

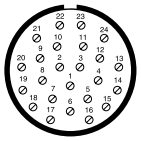

* For hermetic versions, consult TE.

DEUTSCH DBAS Series SCC

37-961 61 contacts size 22

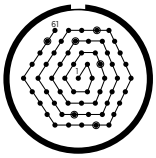

61-0 61 contacts size 20 *

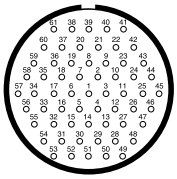

61-5 49 contacts size 20
2 contacts size 8 *

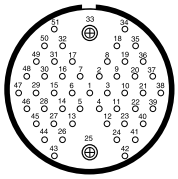

61-14 37 contacts size 16

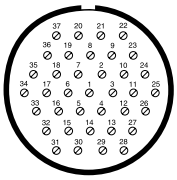

61-21 12 contacts size 8 *

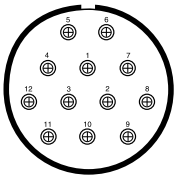

61-42 29 contacts size 20
4 contacts size 16
8 contacts size 12

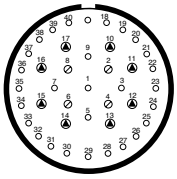

61-949 46 contacts size 20
3 contacts size 8 *

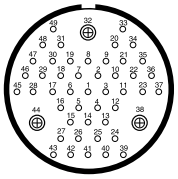

* For hermetic versions, consult TE.

Specific Modifications

Mod Code	Description
090	Without contact
090-1A	Without contact + without nut
090 A614	Without contact + lanyard length 134.3 ± 2.1 mm
090 B614	Without contact + lanyard length 164.3 ± 2.1 mm
090 C614	Without contact + lanyard length 194.3 ± 2.1 mm
*****	For other modifications, consult TE

Lengths of Lanyard

MOD 614	3 ± 2.10	7 ± 2.10	12 ± 2.10	19 ± 2.10	27 ± 2.10	37 ± 2.10	61 ± 2.10
Standard	120.35	120.10	119.95	119.70	119.40	119.20	118.35
A614	134.95	134.70	134.55	134.30	134.00	133.80	132.95
B614	164.95	164.70	164.55	164.30	164.00	163.80	162.95
C614	194.95	194.70	194.55	194.30	194	193.80	192.95
D614	205.35	205.10	204.95	204.70	204.40	204.20	203.35
E614	217.65	217.40	217.25	217.00	216.70	216.50	215.65
F614	230.65	230.40	230.25	230.00	229.70	229.50	228.65
G614	145.05	144.80	144.65	144.40	144.10	143.90	143.05
H614	95.05	94.80	94.65	94.40	94.10	93.90	93.05
K614	125.45	125.20	125.05	124.80	124.50	124.30	123.45
L614	245.05	244.80	244.65	244.40	244.10	243.90	243.05

MOD 614	3 ± 2.10	7 ± 2.10	12 ± 2.10	19 ± 2.10	27 ± 2.10	37 ± 2.10	61 ± 2.10
M614	495.05	494.80	494.65	494.40	494.10	493.90	493.05
N614	99.35	99.10	98.95	98.70	98.40	98.20	97.35
P614	295.05	294.80	294.65	294.40	294.10	293.90	293.05
Q614	191.05	190.80	190.65	194.40	190.10	189.90	189.05
R614	109.65	109.40	109.25	109.00	108.70	108.50	107.65
S614	154.25	154.00	153.85	153.60	153.30	153.10	152.25
T614	76.05	75.80	75.65	75.40	75.10	74.90	74.05-
U614	119.47	119.22	119.07	118.82	118.52	118.32	117.47
V614	87.75	87.50	87.35	87.10	86.80	86.60	85.75
W614	385.55	385.30	385.15	384.90	384.60	384.40	383.55
X614	171.65	171.40	171.25	171.00	170.70	170.50	169.65

For other lengths of lanyard, consult TE. Dimensions in mm

Equivalence Table

	ESCC Specification	ESCC Component Number	TE Part Number
DBAS sealed receptacles and plugs	ESCC 3401/008	340100801B	DBAS 7* * **-** ** *** SCC
Contacts for DBAS sealed receptacles and plugs, size 8 to size 20	ESCC No. 3401/009	340100901B 340100902B 340100903B 340100904B 340100905B 340100906B 340100907B 340100908B 340100909B 340100910B 340100911B 340100912B 340100913B 340100914B 340100915B 340100916B 340100917B 340100918B 340100919B 340100920B	006-0937-20 SCC 006-0912-20 SCC 006-0044-20 SCC 006-0055-20 SCC 006-0972-20 SCC 006-0973-20 SCC 006-0937-16 SCC 006-0912-16 SCC 006-1168-16 SCC 006-1169-16 SCC 006-0937-12 SCC 006-0912-12 SCC 006-1157-12 SCC 006-1159-12 SCC 006-0041-08 SCC 006-0040-08 SCC 005-0257-08 SCC Consult us 005-0893-08 SCC 005-0896-08 SCC
Contacts for DBAS sealed receptacles and plugs, size 22	ESCC No. 3401/012	340101201B	028-0108-22 SCC 029-0100-22 SCC
		340101202B	028-0113-22 SCC 029-0101-22 SCC
		340101203B	DF 28-046-22 C SCC
		340101204B	DF 28 A 047-22 C SCC
DBA stainless steel hermetic receptacles	ESCC No. 3401/023	3401023B	DBA 7* H **-** * * *** SCC
DBC hermetic receptacles	ESCC No. 3401/043	340104301B	DBC 7* H **-** * * *** SCC
DBAS savers type 171 - 172	ESCC No. 3401/033	340103301B 340103302B	DBAS 171 **-** * SCC DBAS 172 **-** * SCC

Equivalence Table

	ESCC Specification	ESCC Component Number	TE Part Number
Accessories for DBAS sealed receptacles and plugs	ESCC No. 3401/064	340106401B	006-0909-03-A499 SCC
		340106402B	006-0909-12-A499 SCC
		340106403B	006-0909-14-A499 SCC
		340106404B	006-0909-16-A499 SCC
		340106405B	006-0909-18-A499 SCC
		340106406B	006-0909-20-A499 SCC
		340106407B	006-0909-61-A499 SCC
		340106408B	006-0910-03-A499 SCC
		340106409B	006-0910-12-A499 SCC
		340106410B	006-0910-14-A499 SCC
		340106411B	006-0910-16-A499 SCC
		340106412B	006-0910-18-A499 SCC
		340106413B	006-0910-20-A499 SCC
		340106414B	006-0910-61-A499 SCC
		340106415B	006-0908-03-A499 SCC
		340106416B	006-0908-12-A499 SCC
		340106417B	006-0908-14-A499 SCC
		340106418B	006-0908-16-A499 SCC
		340106419B	006-0908-18-A499 SCC
		340106420B	006-0908-20-A499 SCC
		340106421B	006-0908-61-A499 SCC
		340106422B	006-0701-03-A499 SCC
		340106423B	006-0701-12-A499 SCC
		340106424B	006-0701-14-A499 SCC
		340106425B	006-0701-16-A499 SCC
		340106426B	006-0701-18-A499 SCC
		340106427B	006-0701-20-A499 SCC
		340106428B	006-0701-61-A499 SCC
		340106429B	006-0005-08 SCC
		340106430B	006-0005-12 SCC
		340106431B	006-0005-14 SCC
		340106432B	006-0005-16 SCC
		340106433B	006-0005-18 SCC
		340106434B	006-0005-20 SCC
		340106435B	006-0005-61 SCC
		340106436B	006-0006-12 SCC
		340106437B	006-0006-14 SCC
		340106438B	006-0006-18 SCC
		340106439B	006-0006-20 SCC
		340106440B	006-0006-22 SCC
		340106441B	006-0006-24 SCC

DBAS 70 - Square Flange Receptacle

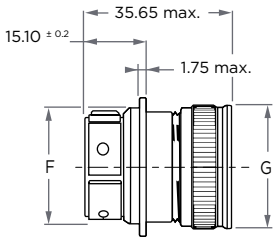

With nut

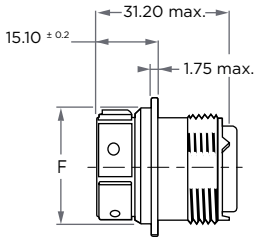

Without nut (MOD 1A)

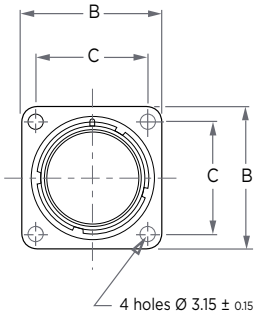

Part Number	B max	C max	F max	G max	Part Number
DBAS 70-3-** P/S 090 SCC	22.60	15.90	14.50	17.00	DBAS 70-3-**-P/S 090-1A SCC
DBAS 70-7-** P/S 090 SCC	25.80	18.26	17.35	21.80	DBAS 70-7-**-P/S 090-1A SCC
DBAS 70-12-** P/S 090 SCC	28.20	20.62	20.80	25.00	DBAS 70-12-**-P/S 090-1A SCC
DBAS 70-19-** P/S 090 SCC	30.60	23.02	24.00	28.25	DBAS 70-19-**-P/S 090-1A SCC
DBAS 70-27-** P/S 090 SCC	33.00	24.58	28.65	30.95	DBAS 70-27-**-P/S 090-1A SCC
DBAS 70-37-** P/S 090 SCC	36.90	30.12	31.95	34.15	DBAS 70-37-**-P/S 090-1A SCC
DBAS 70-61-** P/S 090 SCC	45.70	36.48	39.90	42.00	DBAS 70-61-**-P/S 090-1A SCC

Dimensions in mm
Rear accessories tightening torque (see table page 63)

DBAS 71 - Cable Connecting Receptacle

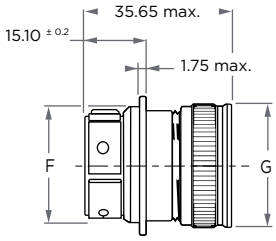

With nut

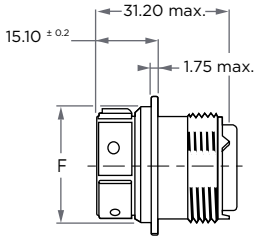

Without nut (MOD 1A)

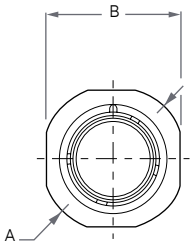

Part Number	A max	B max	F max	G max	Part Number
DBAS 71-3-** P/S 090 SCC	25.45	22.60	14.50	17.00	DBAS 71-3-**-P/S 090-1A SCC
DBAS 71-7-** P/S 090 SCC	28.65	25.80	17.35	21.80	DBAS 71-7-**-P/S 090-1A SCC
DBAS 71-12-** P/S 090 SCC	31.05	28.20	20.80	25.00	DBAS 71-12-**-P/S 090-1A SCC
DBAS 71-19-** P/S 090 SCC	33.45	30.60	24.00	28.25	DBAS 71-19-**-P/S 090-1A SCC
DBAS 71-27-** P/S 090 SCC	35.85	33.00	28.65	30.95	DBAS 71-27-**-P/S 090-1A SCC
DBAS 71-37-** P/S 090 SCC	39.75	36.90	31.95	34.15	DBAS 71-37-**-P/S 090-1A SCC
DBAS 71-61-** P/S 090 SCC	48.55	45.70	39.90	42.00	DBAS 71-61-**-P/S 090-1A SCC

Dimensions in mm
Rear accessories tightening torque (see table page 63)

Females inserts protrude from the FRONT face of all receptacles types 70, 71 and 74 by 0,56 ± 0,1 mm.
Panel sealing gasket to be ordered separately, see page 64. Panel cutout, see page 67.

DBAS 74 - Jam-Nut Mounting Receptacle

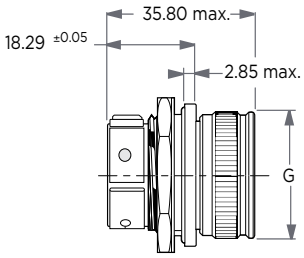

With nut

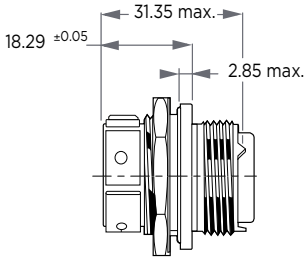

Without nut (MOD 1A)

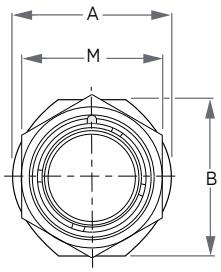

Section across A-A

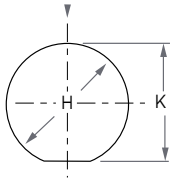

Part Number	A max	B max	G max	M max	H max	K max	Max. Nut Panel Tightening Torque	Part Number
DBAS 74-3-** P/S 090 SCC	19.20	19.20	17.00	16.31	14.35	13.45	0.70 daN.m	DBAS 74-3-** P/S 090-1A SCC
DBAS 74-7-** P/S 090 SCC	22.40	22.40	21.80	21.07	17.50	16.80	1.00 daN.m	DBAS 74-7-** P/S 090-1A SCC
DBAS 74-12-** P/S 090 SCC	27.20	27.20	25.00	24.24	20.65	19.95	1.30 daN.m	DBAS 74-12-** P/S 090-1A SCC
DBAS 74-19-** P/S 090 SCC	30.40	29.60	28.25	27.40	25.45	24.65	1.50 daN.m	DBAS 74-19-** P/S 090-1A SCC
DBAS 74-27-** P/S 090 SCC	33.60	33.50	30.95	32.18	28.60	27.85	1.8 0 daN.m	DBAS 74-27-** P/S 090-1A SCC
DBAS 74-37-** P/S 090 SCC	38.30	36.30	34.15	35.36	31.80	31.00	2.20 daN.m	DBAS 74-37-** P/S 090-1A SCC
DBAS 74-61-** P/S 090 SCC	47.80	47.20	42.00	43.02	38.10	37.30	2.90 daN.m	DBAS 74-61-** P/S 090-1A SCC

Dimensions in mm
Rear accessories tightening torque (see table page 63)

Females inserts protrude from the FRONT face of all receptacles types 70, 71 and 74 by 0,56 ± 0,1 mm.
Panel sealing gasket to be ordered separately, see page 64. Panel cutout, see page 67.

DBAS 76 - Feel-Control Locking Plug

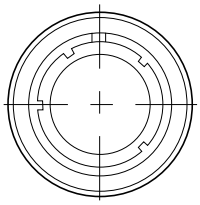

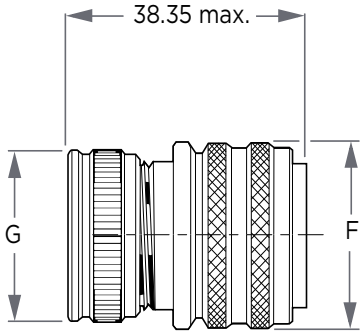

With nut

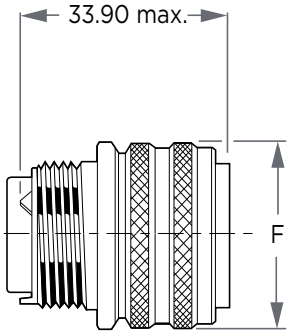

Without nut (MOD 1A)

Part Number	F max	G max	Part Number
DBAS 76-3-** P/S 090 SCC	19.20	19.20	DBAS 76-3-** P/S 090-1A SCC
DBAS 76-7-** P/S 090 SCC	22.40	22.40	DBAS 76-7-** P/S 090-1A SCC
DBAS 76-12-** P/S 090 SCC	27.20	27.20	DBAS 76-12-** P/S 090-1A SCC
DBAS 76-19-** P/S 090 SCC	30.40	29.60	DBAS 76-19-** P/S 090-1A SCC
DBAS 76-27-** P/S 090 SCC	33.60	33.50	DBAS 76-27-** P/S 090-1A SCC
DBAS 76-37-** P/S 090 SCC	38.30	36.30	DBAS 76-37-** P/S 090-1A SCC
DBAS 76-61-** P/S 090 SCC	47.80	47.20	DBAS 76-61-** P/S 090-1A SCC

Dimensions in mm
Rear accessories tightening torque (see table page 63)

DBAS 78 - Plug with Heavy Duty Lanyard

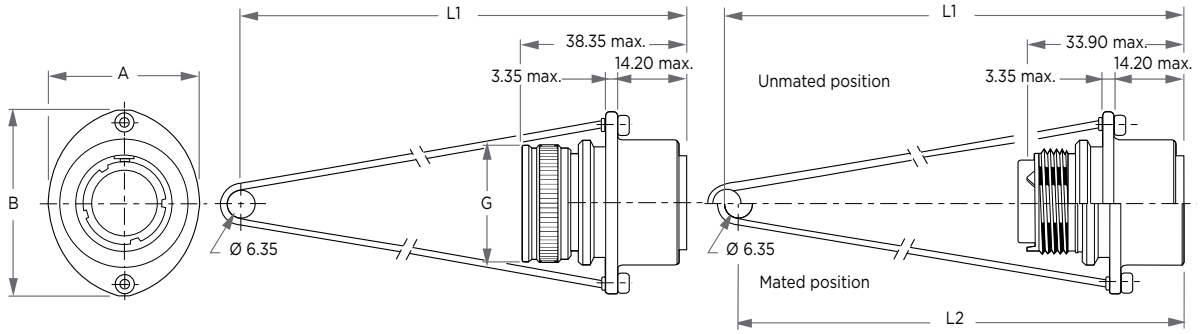

Part Number	A max	B max	G max	L1 +2.1	L2 +2.1	Part Number
DBAS 78-3-** P/S 090 SCC	23.30	31.85	17.00	120.35	117.65	DBAS 78-3-** P/S 090-1A SCC
DBAS 78-7-** P/S 090 SCC	26.80	35.65	21.80	120.10	117.40	DBAS 78-7-** P/S 090-1A SCC
DBAS 78-12-** P/S 090 SCC	29.60	38.70	25.00	119.95	117.25	DBAS 78-12-** P/S 090-1A SCC
DBAS 78-19-** P/S 090 SCC	33.55	42.50	28.25	119.70	117.00	DBAS 78-19-** P/S 090-1A SCC
DBAS 78-27-** P/S 090 SCC	37.20	46.20	30.95	119.40	116.70	DBAS 78-27-** P/S 090-1A SCC
DBAS 78-37-** P/S 090 SCC	40.70	48.45	34.15	119.20	116.50	DBAS 78-37-** P/S 090-1A SCC
DBAS 78-61-** P/S 090 SCC	47.85	56.60	42.00	118.35	115.64	DBAS 78-61-** P/S 090-1A SCC

Dimensions in mm
Rear accessories tightening torque (see table page 63)
*Only for the spring

Traction angle ±15° in all axis. For specific lengths of lanyards, consult TE.

DBAS 79 - Rack and Panel

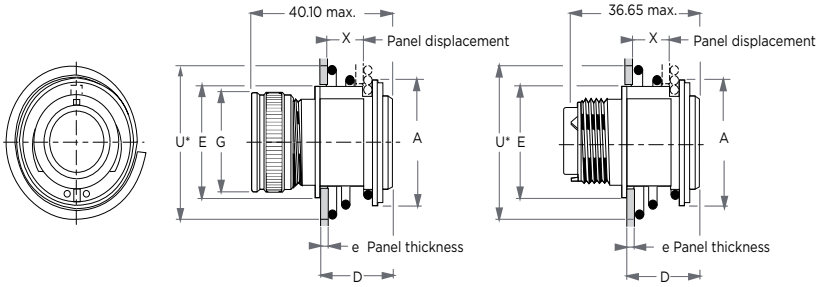

Part Number	A max	D max	E max	G max	U* max	X max	Compression Force for X		Part Number
							Max	Min	
DBAS 79-3-** P/S 090 SCC	22.45	21.05	19.30	17.00	31.00*	13.95 - e	1.60 daN.m	0.30 daN.m	DBAS 79-3-** P/S 090-1A SCC
DBAS 79-7-** P/S 090 SCC	29.60	20.85	24.40	21.80	34.30*	12.30 - e	3.3 0daN.m	0.60 daN.m	DBAS 79-7-** P/S 090-1A SCC
DBAS 79-12-** P/S 090 SCC	31.90	20.85	27.25	25.00	39.75*	12.45 - e	5.00 daN.m	1.20 daN.m	DBAS 79-12-** P/S 090-1A SCC
DBAS 79-19-** P/S 090 SCC	35.15	20.85	32.00	28.25	43.40*	12.15 - e	8.70 daN.m	1.90 daN.m	DBAS 79-19-** P/S 090-1A SCC
DBAS 79-27-** P/S 090 SCC	38.70	20.60	35.75	30.95	47.15*	11.80 - e	11.80 daN.m	2.70 daN.m	DBAS 79-27-** P/S 090-1A SCC
DBAS 79-37-** P/S 090 SCC	45.95	20.60	40.60	34.15	53.50*	11.80 - e	15.60 daN.m	3.70 daN.m	DBAS 79-37-** P/S 090-1A SCC
DBAS 79-61-** P/S 090 SCC	54.40	20.30	50.40	42.00	72.00*	9.35 - e	26.20 daN.m	6.10 daN.m	DBAS 79-61-** P/S 090-1A SCC

Dimensions in mm
*Only for the spring

To be used with the spring compressed to the maximum panel displacement X depends on thickness (e) chosen by the user.
Panel cutout, see page 67. Rack system mounting, see NU 025-011

DBA / DBC 70H - Hermetic Square Flange Receptacle

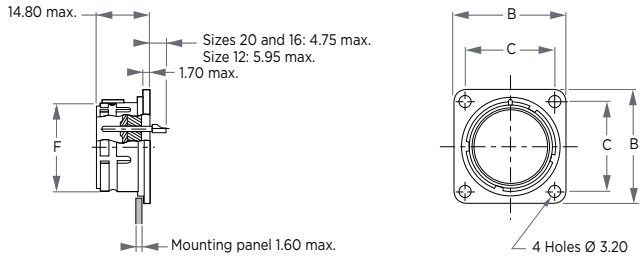

Part Number	B max	C ± 0,1	F max	Part Number
DBA 70H 3-** P* SCC	22.32	15.88	11.11	DBC 70H 3-** P* SCC
DBA 70H 7-** P* SCC	25.50	18.26	14.54	DBC 70H 7-** P* SCC
DBA 70H 12-** P* SCC	27.86	20.65	17.97	DBC 70H 12-** P* SCC
DBA 70H 19-** P* SCC	30.25	23.02	21.50	DBC 70H 19-** P* SCC
DBA 70H 27-** P* SCC	32.64	24.59	25.44	DBC 70H 27-** P* SCC
DBA 70H 37-** P* SCC	36.60	30.15	28.51	DBC 70H 37-** P* SCC
DBA 70H 61-** P* SCC	45.34	36.47	35.80	DBC 70H 61-** P* SCC

Dimensions in mm

DBA / DBC 73H - Hermetic Solder Flange Receptacle

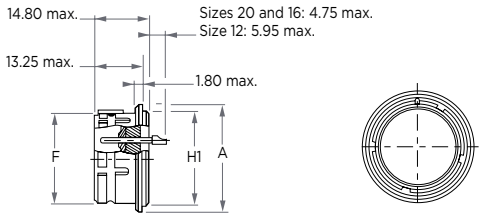

Part Number	B max	C ± 0,1	F max	Part Number
DBA 73H 3-** P* SCC	15.09	11.11	12.62	DBC 73H 3-** P* SCC
DBA 73H 7-** P* SCC	19.10	14.54	15.80	DBC 73H 7-** P* SCC
DBA 73H 12-** P* SCC	22.28	17.97	18.97	DBC 73H 12-** P* SCC
DBA 73H 19-** P* SCC	25.45	21.50	22.96	DBC 73H 19-** P* SCC
DBA 73H 27-** P* SCC	30.07	25.44	26.92	DBC 73H 27-** P* SCC
DBA 73H 37-** P* SCC	32.59	28.51	29.28	DBC 73H 37-** P* SCC
DBA 73H 61-** P* SCC	39.72	35.80	36.44	DBC 73H 61-** P* SCC

Dimensions in mm

DBA / DBC 74H - Hermetic Jam-Nut Mounting Receptacle

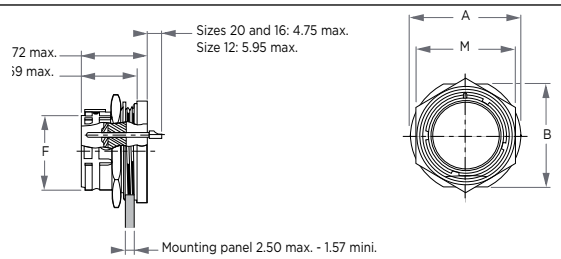

Panel sealing gasket to be ordered separately, see page 64.
O'ring to be ordered separately, see page 64.
Panel cutout, see page 67.

Dimensions in mm

Part Number	A max	B max	F max	M max	Max. Nut Panel Tightening Torque	Part Number
DBA 74H 3-** P* SCC	19.53	18.58	11.11	15.97	0.70 daN.m	DBC 74H 3-** P* SCC
DBA 74H 7-** P* SCC	22.70	21.76	14.54	20.72	1.00 daN.m	DBC 74H 7-** P* SCC
DBA 74H 12-** P* SCC	25.77	24.93	17.97	23.90	1.30 daN.m	DBC 74H 12-** P* SCC
DBA 74H 19-** P* SCC	30.65	29.72	21.50	27.07	1.50 daN.m	DBC 74H 19-** P* SCC
DBA 74H 27-** P* SCC	33.83	32.88	25.44	31.34	1.80 daN.m	DBC 74H 27-** P* SCC
DBA 74H 37-** P* SCC	36.98	36.16	28.51	35.10	2.20 daN.m	DBC 74H 37-** P* SCC
DBA 74H 61-** P* SCC	48.23	47.29	35.80	42.97	2.90 daN.m	DBC 74H 61-** P* SCC

DBAS 171 / 172 - Savers

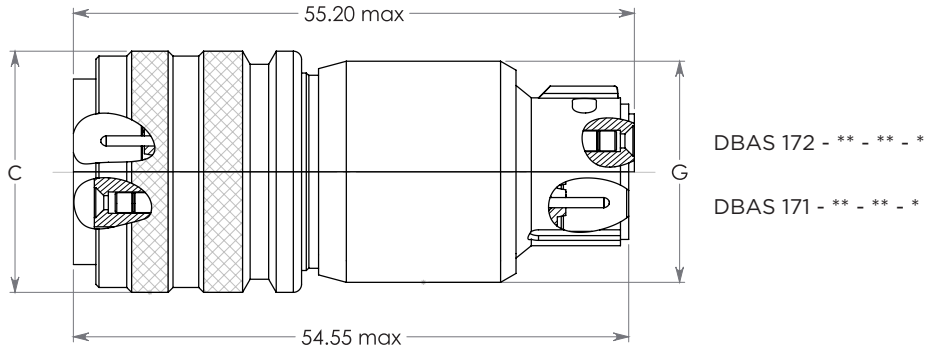

Part Number	Contact Type		C max	G max
	Plug Side	Receptacle Side		
DBAS 171-3-**-*	Socket	Pin	20.40	18.30
DBAS 171-7-**-*	Socket	Pin	23.70	21.90
DBAS 171-12-**-*	Socket	Pin	26.90	24.80
DBAS 171-19-**-*	Socket	Pin	31.50	28.40
DBAS 171-27-**-*	Socket	Pin	36.10	31.90
DBAS 171-37-**-*	Socket	Pin	39.30	35.10
DBAS 171-61-**-*	Socket	Pin	47.30	43.30
DBAS 172-3-**-*	Pin	Socket	20.40	18.30
DBAS 172-7-**-*	Pin	Socket	23.70	21.90
DBAS 172-12-**-*	Pin	Socket	26.90	24.80
DBAS 172-19-**-*	Pin	Socket	31.50	28.40
DBAS 172-27-**-*	Pin	Socket	36.10	31.90
DBA S172-37-**-*	Pin	Socket	39.30	35.10
DBAS 172-61-**-*	Pin	Socket	47.30	43.30

Dimensions in mm

DBAS	171	3	X	N**	SCC

Connector type

Shell type
171 Pin contacts on receptacle side / Socket contacts on plug side
172 Socket contacts on receptacle side / Pin contacts on plug side

Shell Size
3-7-12-19-27-37-61

Arrangements
(See pages 52-53)

Insert Clocking Position
N Normal
W-X-Y-B-C Others (See page page 50)

ESA Space Grade

Accessories

Nut

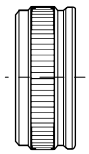

Size	Part Number	
3	006-0909-03 A499	SCC
7	006-0909-12 A499	SCC
12	006-0909-14 A499	SCC
19	006-0909-16 A499	SCC
27	006-0909-18 A499	SCC
37	006-0909-20 A499	SCC
61	006-0909-61 A499	SCC

Straight cable clamp

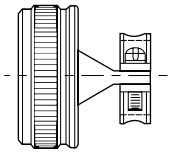

Size	Part Number	
3	006-0910-03 A499	SCC
7	006-0910-12 A499	SCC
12	006-0910-14 A499	SCC
19	006-0910-16 A499	SCC
27	006-0910-18 A499	SCC
37	006-0910-20 A499	SCC
61	006-0910-61 A499	SCC

Elbowed cable clamp

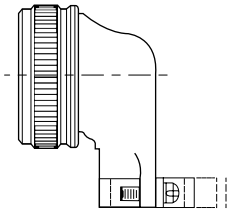

Size	Part Number	
3	006-0908-03 A499	SCC
7	006-0908-12 A499	SCC
12	006-0908-14 A499	SCC
19	006-0908-16 A499	SCC
27	006-0908-18 A499	SCC
37	006-0908-20 A499	SCC
61	006-0908-61 A499	SCC

Potting cup

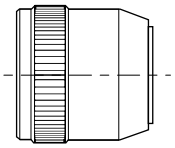

Size	Part Number	
3	006-0701-03 A499	SCC
7	006-0701-12 A499	SCC
12	006-0701-14 A499	SCC
19	006-0701-16 A499	SCC
27	006-0701-18 A499	SCC
37	006-0701-20 A499	SCC
61	006-0701-61 A499	SCC

Size	Accessories Tightening Torques (± 10%)
3	0.36 daN.m
7	0.5 daN.m
12	0.6 daN.m
19	0.65 daN.m
27	0.7 daN.m
37	0.75 daN.m
61	0.95 daN.m

Cable Clamp Sleeves

Size	Main Bushings	Middle Bushings		
03	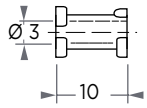 006-0005-08 SCC			
07	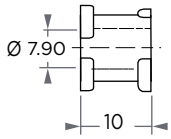 006-0005-12 SCC	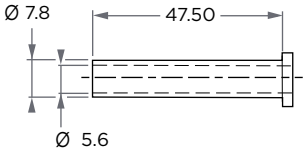 006-0006-12 SCC		
12	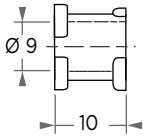 006-0005-14 SCC	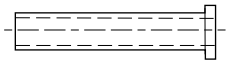 006-0005-14 SCC		
19	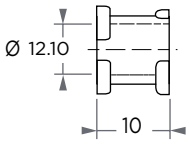 006-0005-16 SCC	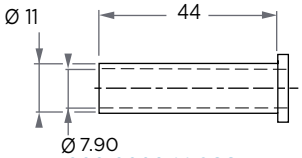 006-0006-14 SCC	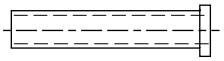 006-0006-12 SCC	
27	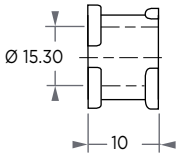 006-0005-18 SCC	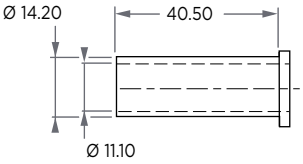 006-0006-18 SCC	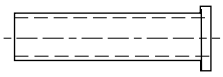 006-0006-14 SCC	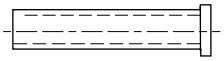 006-0006-12 SCC
37	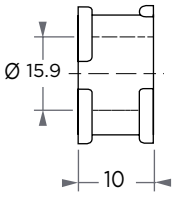 006-0005-20 SCC	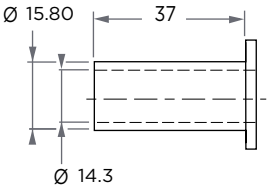 006-0005-20 SCC	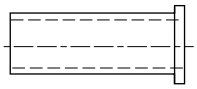 006-0006-18 SCC	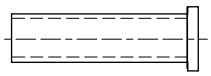 006-0006-14 SCC
61	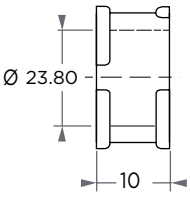 006-0005-61 SCC	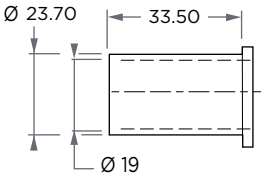 006-0006-24 SCC	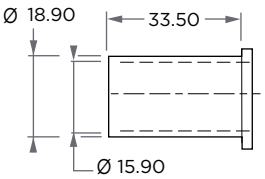 006-0006-22 SCC	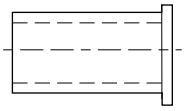 006-0006-20 SCC

Protective Caps for Ground Applications

TYPE 70

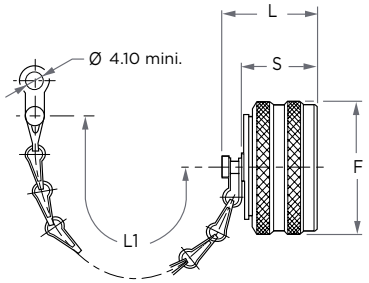

Part Number	F max	L max	L1 max	S max
DBAS C-70-3	20.40	20.45	79.00	16.95
DBAS C-70-7	23.70	20.45	95.00	16.95
DBAS C-70-12	26.90	20.45	95.00	16.95
DBAS C-70-19	31.50	20.45	95.00	16.95
DBAS C-70-27	36.10	20.45	95.00	16.95
DBAS C-70-37	39.30	20.45	111.00	16.95
DBAS C-70-61	47.30	20.45	111.00	16.95

TYPE 71

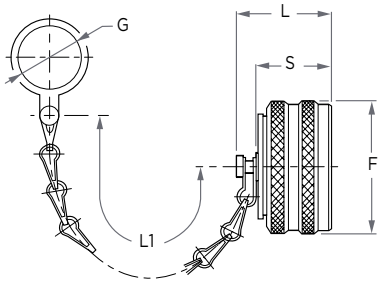

Part Number	F max	G mini	L max	L1 max	S max
DBAS C-71-3	20.40	14.60	20.00	79.00	16.85
DBAS C-71-7	23.70	19.30	20.00	95.00	16.85
DBAS C-71-12	26.90	22.50	20.00	95.00	16.85
DBAS C-71-19	31.50	25.50	20.00	95.00	16.85
DBAS C-71-27	36.10	27.35	20.00	95.00	16.85
DBAS C-71-37	39.30	30.40	20.00	111.00	16.85
DBAS C-71-61	47.30	38.40	20.20	111.00	17.05

TYPE 74

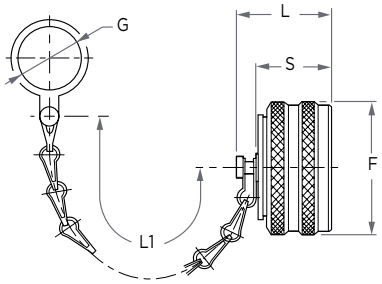

Part Number	F max	G mini	L max	L1 max	S max
DBAS C 74-3	20.40	14.60	20.45	79.00	16.95
DBAS C 74-7	23.70	17.70	20.45	95.00	16.95
DBAS C 74-12	26.90	20.90	20.45	95.00	16.95
DBAS C 74-19	31.50	25.70	20.45	95.00	16.95
DBAS C 74-27	36.10	28.90	20.45	95.00	16.95
DBAS C 74-37	39.30	32.00	20.45	111.00	16.95
DBAS C 74-61	47.30	38.40	20.45	111.00	16.95

TYPE 76 -**

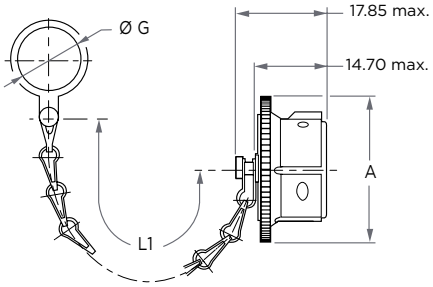

TYPE 76-70**

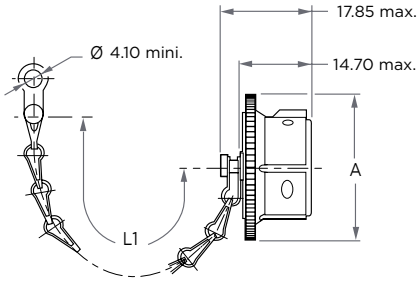

Part Number	A max	G mini	L1 max
DBAS C-76-3 DBAS C 76-70-3	18.50	14.60	79.00
DBAS C-76-7 DBAS C 76-70-7	22.80	18.85	95.00
DBAS C-76-12 DBAS C 76-70-12	27.20	22.10	95.00
DBAS C-76-19 DBAS C 76-70-19	30.60	25.50	95.00
DBAS C-76-27 DBAS C 76-70-27	34.55	27.35	95.00
DBAS C-76-37 DBAS C 76-70-37	37.85	30.40	111.00
DBAS C-76-61 DBAS C 76-70-61	46.45	38.40	111.00

Note: Mod. A 134: Without chain.
A 190: Nylon wire.

Dummy Receptacles for Ground Applications

DUMMY RECEPTACLE

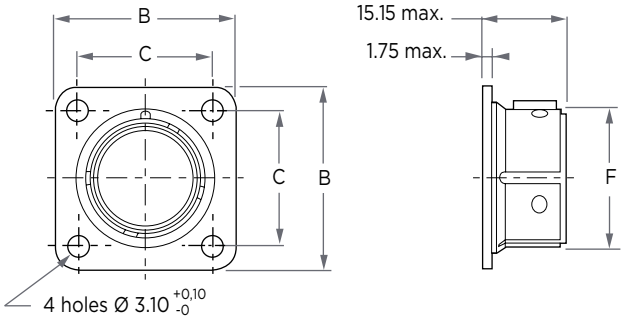

Size	Part Number	B max	C ±0.1	F max
3	DBAS 70 PR 3	22.60	15.90	11.25
7	DBAS 70 PR 7	25.80	18.26	14.65
12	DBAS 70 PR 12	28.20	20.62	18.05
19	DBAS 70 PR 19	30.60	23.02	21.60
27	DBAS 70 PR 27	33.00	24.58	25.55
37	DBAS 70 PR 37	36.90	30.12	28.65
61	DBAS 70 PR 61	45.70	36.48	35.95

Dimensions in mm
Only N position

Panel Sealing Gasket and O'ring for Receptacles

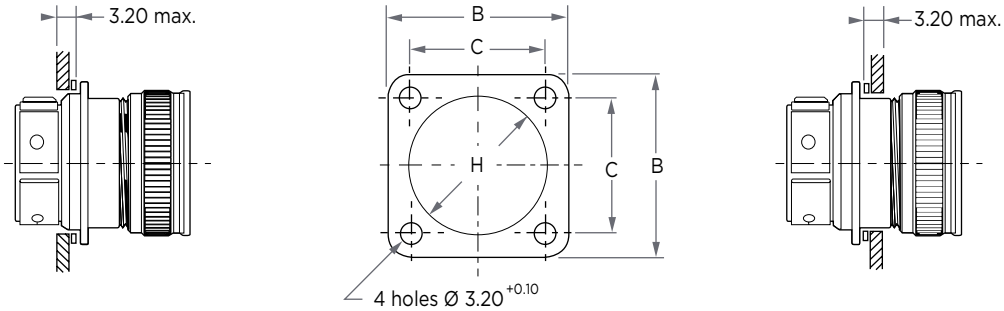

Front Flange Mounting			B max	C max	Rear Flange Mounting		
Size	Part Number	H max			H max	Part Number	Size
3	025-0001-03	14.80	22.50	15.90	14.80	025-0001-03	3
7	025-0001-07	17.70	25.70	18.26	18.80	025-0002-07	7
12	025-0001-12	21.10	28.10	20.62	22.00	025-0002-12	12
19	025-0001-19	24.30	30.50	23.02	25.10	025-0002-19	19
27	025-0001-27	29.00	32.80	24.58	27.50	025-0002-27	27
37	025-0001-37	32.30	36.80	30.12	30.50	025-0002-37	37
61	025-0001-61	40.20	45.50	36.48	38.50	025-0002-61	61

Dimensions in mm

O'ring

Size	Part Number
3	103-0001-15
7	103-0001-17
12	103-0001-19
19	103-0001-22
27	103-0001-24
37	103-0001-26
61	103-0001-29

Leading Clips for Plugs and Protective Caps

For protective caps DBAS C 70-71-74

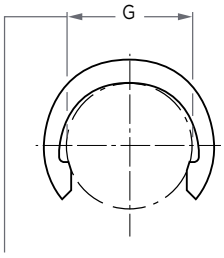

Nominal dimension Ø

Size	Part Number
3	100-0065-03
7	100-0065-07
12	100-0065-12
19	100-0065-19
27	100-0009-27
37	100-0009-37
61	100-0065-61

For plugs DBAS 76-78

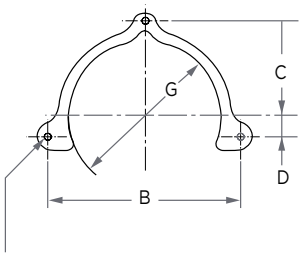

Size	Part Number	B ±0.1	C ±0.1	D ±0.1	G
3	025-0792-03	21.20	10.80	2.00	15.00
7	025-0792-07	24.00	12.30	2.40	17.50
12	025-0792-12	27.60	14.00	2.70	21.30
19	025-0792-19	32.00	16.20	3.25	25.00
27	025-0792-27	36.60	18.60	3.75	28.40
37	025-0792-37	39.60	20.20	4.00	31.10
61	025-0792-61	47.00	24.00	5.20	40.20

Dimensions in mm

Mating - Unmating dimensions

Mating DBAS 76 with 70

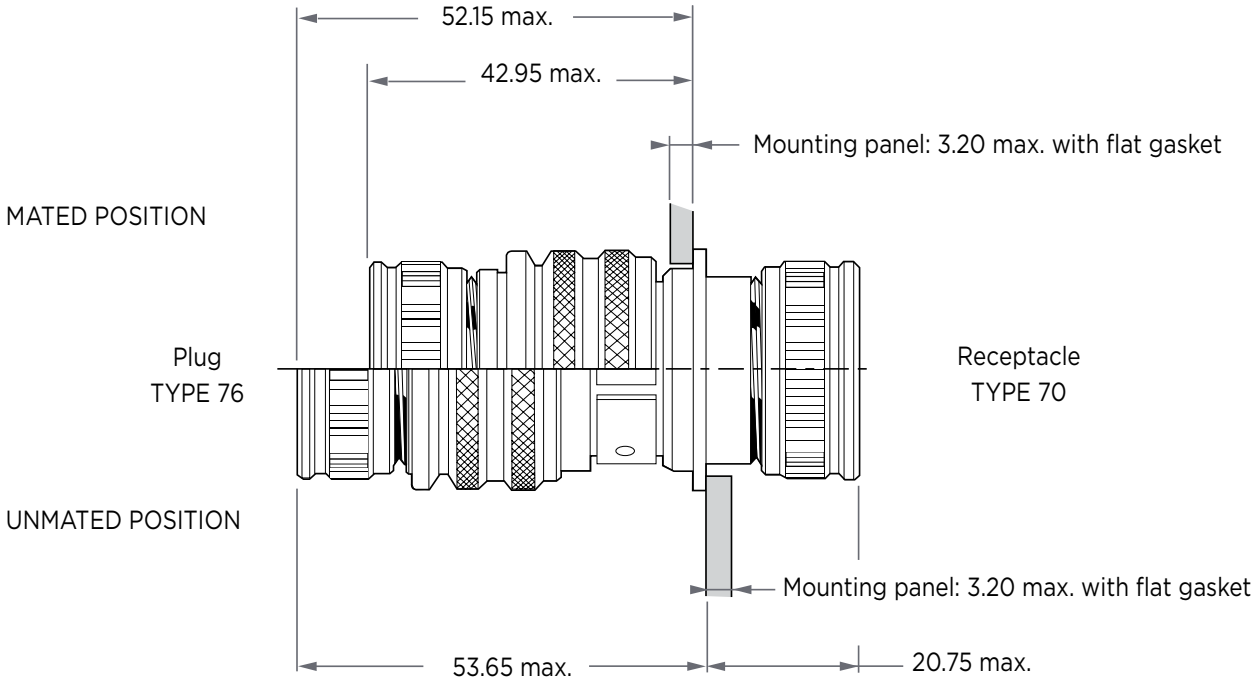

Dimensions in mm

Mating DBAS 76 with 74

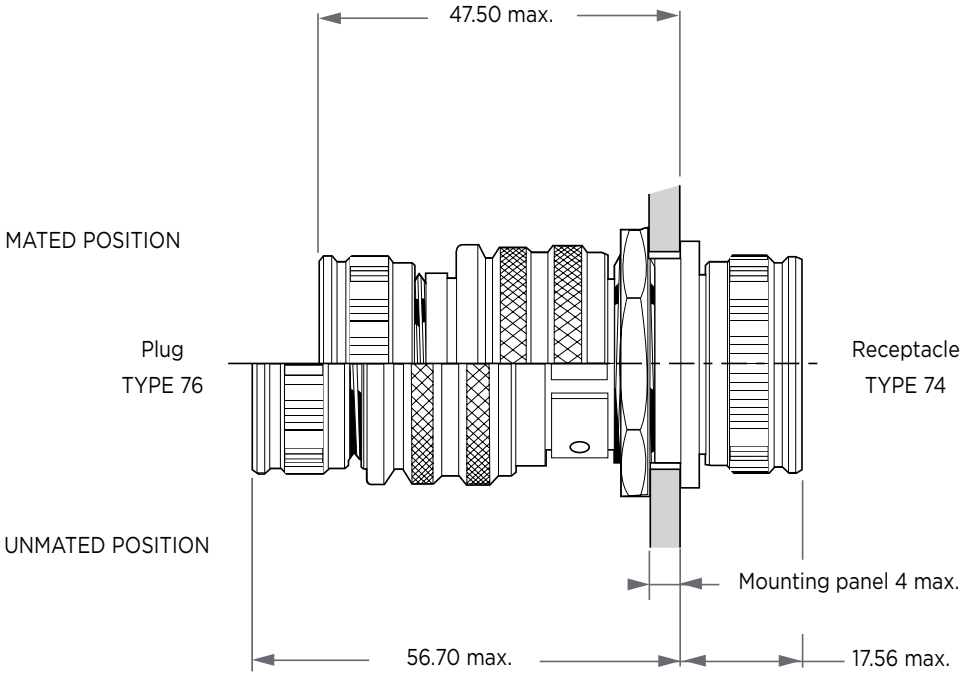

Dimensions in mm

Mating - Unmating Dimensions

Mating DBAS 79 with 70

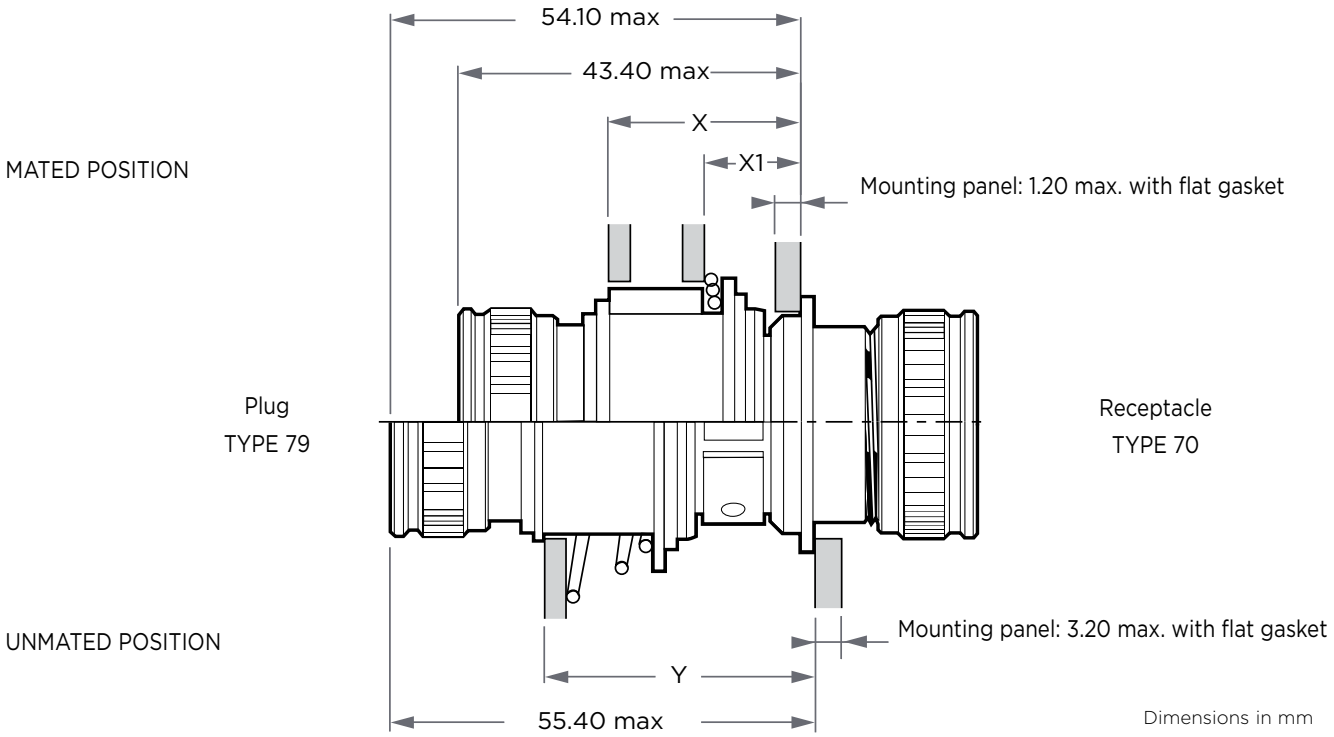

Mating DBAS 79 with 74

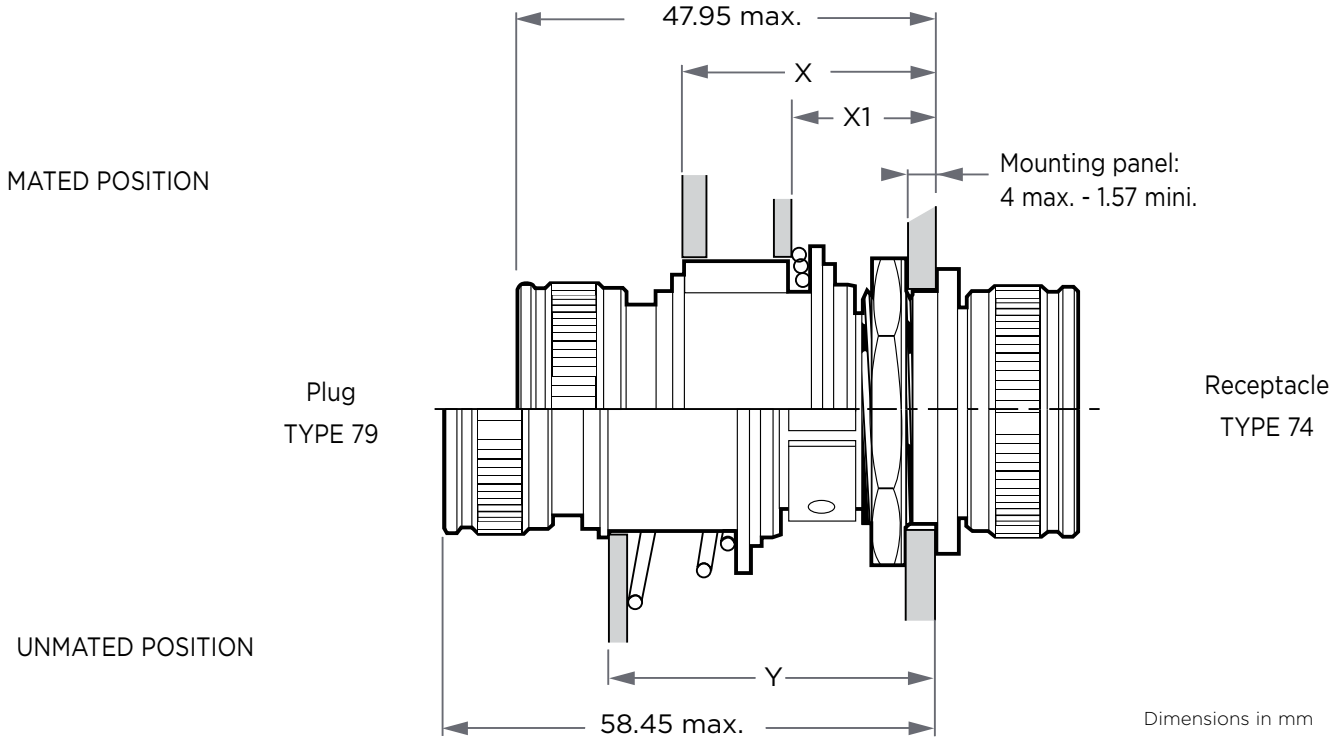

Panel Cutout

For Sealed and Hermetic Receptacles

Square flange

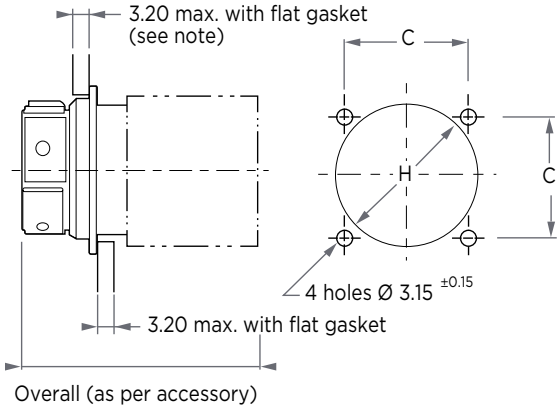

Jam-nut mounted

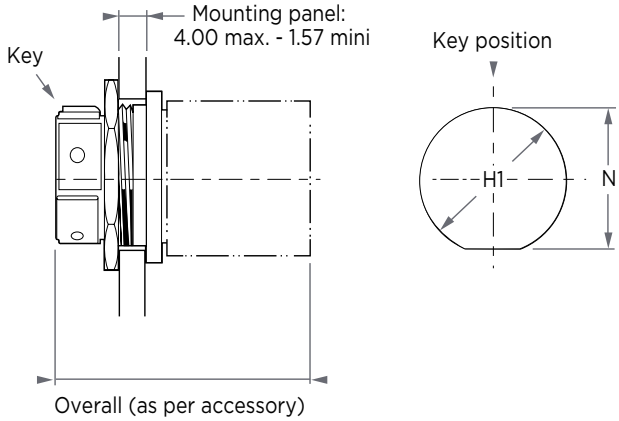

Note: For utilisation on rack connectors, see page 58.

For Sealed Receptacle

Rack and panel connector

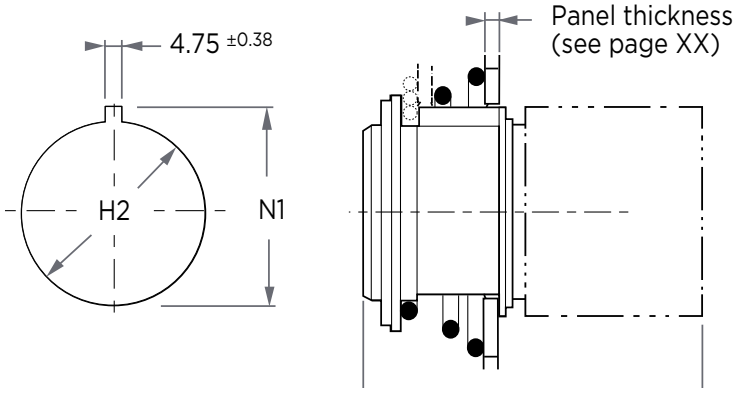

For Hermetic Receptacle

Solder flange

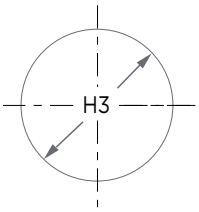

Size	C ± 0.1	H + 0 - 0.2	H1 + 0.2 - 0	H2 ± 0.38	H3 max.	N +0.1 - 0	N1 ± 0.38
3	15.90	14.80	14.40	17.04	14.40	13.56	21.41
7	18.26	19.40	17.55	20.62	17.55	16.79	24.99
12	20.62	22.60	20.73	23.80	20.73	19.91	27.96
19	23.02	25.75	25.48	26.97	25.48	24.61	31.34
27	24.58	28.95	28.65	30.56	28.65	27.81	34.92
37	30.12	32.35	31.83	34.92	31.83	30.99	38.89
61	36.48	40.20	38.20	42.85	38.20	37.26	47.22

Dimensions in mm

Mating – Unmating Forces

Shell Size	Maximum Mating - Unmating Force		Minimum Unmating Force	
	Push-Pull	Rack and Panel	Push-Pull	Rack and Panel
3	6.8	8.01	0.56	0.06
7	8.9	8.90	0.66	0.15
12	15.1	16.90	0.89	0.25
19	16.9	20.46	1.33	0.40
27	17.8	20.46	1.78	0.56
37	19.6	22.24	2.69	0.77
61	21.8	30.25	3.11	0.94

DBAS 78GR, Minimum unmating force for sizes 03 and 07: 3,5 daN. for sizes 12 to 61: daN. (More than standard specification SAE/AS 81703).

Mass

Connectors weight in gram ±5 gr, without nut and contacts.

Size	Type	Shells Types				
		70/71	74	76	78	79
3	P	7.10	10.60	16.70	23.20	12.05
	S	8.20	11.11	17.70	24.20	13.50
7	P	12.05	13.15	21.88	28.88	19.68
	S	12.85	13.95	22.88	29.88	20.68
12	P	15.95	17.91	28.80	35.90	26.30
	S	17.10	19.00	29.90	36.90	27.30
19	P	19.80	22.10	38.05	45.05	31.55
	S	21.95	24.26	40.05	47.05	33.55
27	P	24.30	27.66	46.90	53.90	36.40
	S	27.25	30.60	49.90	56.90	39.40
37	P	27.50	33.15	53.92	60.92	48.22
	S	33.90	37.00	57.92	64.92	52.22
61	P	45.95	53.52	76.38	82.38	72.58
	S	52.65	60.22	82.38	88.38	78.58

P male contact
S female contact

Contacts

Extract from ESA/SCC Details Specification No. 3401/009

Variant	Type	Mating End Size Colour	Crimp Barrel Size Colour	Rated Current (A)	Accepted Wire (AWG)	Max Weight (g)	Engagement & Separation: Engag. Max (N) (1)	Engagement & Separation: Separ. Min. (N) (1)	Test Pin Dia (mm): Min.	Test Pin Dia (mm): Max.	Contact Capability Weight: Pick-up (g) (2)	Contact Capability Weight: Drop (g) (3)	Contact Retent. Force Max. (N)	Contact Insert/ Withdr Force Max. (N)	Probe Damage: Moment (N.cm)	Probe Damage: Probe Dia (mm) Min.	Probe Damage: Probe Dia (mm) Min.	Oversize Pin Excl.: Force Max. (N)	Oversize Pin Excl.: Test Pin Dia (mm) Min.	Oversize Pin Excl.: Test Pin Dia (mm) Min.
01	male	20 red	20 red	7.5	20 24	0.32	—	—	—	—	—	—	70	44	—	—	—	—	—	—
02	female	20 red	20 red	7.5	20 24	0.32	3.33 0.28	2.22 0.20	1.039 0.990	1.042 0.993	— 28.35	226.8 —	70	44	5.75	0.99	1.01	3.4	1.17	1.18
03	male	20 red	18 violet	7.5	18 22	0.32	—	—	—	—	—	—	70	44	—	—	—	—	—	—
04	female	20 red	18 violet	7.5	18 22	0.32	3.33 0.28	2.22 0.20	1.039 0.990	1.042 0.993	— 28.35	226.8 —	70	44	5.75	0.99	1.01	3.4	1.17	1.18
05	male	20 red	26 white	2.5	26 28	0.32	—	—	—	—	—	—	70	44	—	—	—	—	—	—
06	female	20 red	26 white	2.5	26 28	0.32	3.33 0.28	2.22 0.20	1.039 0.990	1.042 0.993	— 28.35	226.8 —	70	44	5.75	0.99	1.01	3.4	1.17	1.18
07	male	16 blue	16 blue	13	16 20	0.60	—	—	—	—	—	—	116	44	—	—	—	—	—	—
08	female	16 blue	16 blue	13	16 20	0.64	5.55 0.56	3.75 0.56	1.610 1.562	1.613 1.565	— 56.70	382.6 —	116	44	23	1.56	1.58	5.6	1.73	1.74
09	male	16 blue	20 red	7.5	20 24	0.60	—	—	—	—	—	—	116	44	—	—	—	—	—	—
10	female	16 blue	20 red	7.5	20 24	0.64	5.55 0.56	3.75 0.56	1.610 1.562	1.613 1.565	— 56.70	382.6 —	116	44	23	1.56	1.58	5.6	1.73	1.74
11	male	12 yellow	12 yellow	25	12 14	1.25	—	—	—	—	—	—	116	44	—	—	—	—	—	—
12	female	12 yellow	12 yellow	25	12 14	1.25	8.40 0.83	5.56 0.85	2.411 2.362	2.413 2.365	— 84	567 —	116	44	23	2.36	2.38	8.4	2.53	2.54
13	male	12 yellow	16 blue	13	16 20	1.25	—	—	—	—	—	—	116	44	—	—	—	—	—	—
14	female	12 yellow	16 blue	13	16 20	1.25	8.40 0.83	5.56 0.85	2.411 2.362	2.413 2.365	— 84	567 —	116	44	23	2.36	2.38	8.4	2.53	2.54
15	male	8 red	8 red	45	8	1.25	—	—	—	—		—	116	44	—	—	—	—	—	—
16	female	8 red	8 red	45	8	1.25	45.40 1.40	45.40 1.40	4.960 4.892	4.963 4.905	— 141.75	4536 —	116	44	23	4.88	4.90	N/A	N/A	N/A
17	male	8 red	10 red	32	10	1.25	—	—	—	—		—	116	44	—	—	—	—	—	—
18	female	8 red	10 red	32	10	1.25	45.40 1.40	45.40 1.40	4.960 4.892	4.963 4.905	— 141.75	4536 —	116	44	23	4.88	4.90	N/A	N/A	N/A
19	male	8 (4)	8 (4)	45	8	1.25	—	—	—	—		—	116	44	—	—	—	—	—	—
20	female	8 (4)	8 (4)	45	8	1.25	45.40 1.40	45.40 1.40	4.960 4.892	4.963 4.905	— 141.75	4536 —	116	44	23	4.88	4.90	N/A	N/A	N/A

Extract from ESA/SCC Details Specification No. 3401/012

Variant	Type	Mating End Size Colour	Crimp Barrel Size Colour	Rated Current (A)	Accepted Wire (AWG)	Max Weight (g)	Engagement & Separation: Engag. Max (N) (1)	Engagement & Separation: Separ. Min. (N) (1)	Test Pin Dia (mm): Min.	Test Pin Dia (mm): Max.	Contact Capability Weight: Pick-up (g) (2)	Contact Capability Weight: Drop (g) (3)	Contact Retent. Force Max. (N)	Contact Insert/ Withdr Force Max. (N)	Probe Damage: Moment (N.cm)	Probe Damage: Probe Dia (mm) Min.	Probe Damage: Probe Dia (mm) Min.	Oversize Pin Excl.: Force Max. (N)	Oversize Pin Excl.: Test Pin Dia (mm) Min.	Oversize Pin Excl.: Test Pin Dia (mm) Min.
01	male	22 green	22 green	5.0	22 24	0.78	—	—	—	—	—	—	40	18.50	—	—	—	—	—	—
02	female					0.075	3.33 —	2.22 0.20	0.710 0.713	0.747 0.750	— 14.2	230 —	40	18.50	1.40	0710	0.713	3.33	0.837	0.841
03	male	22 green	26 white	2.5	26 28	0.078	—	—	—	—	—	—	40	18.50	—	—	—	—	—	—
04	female					0.075	3.33 —	2.22 0.20	0.710 0.713	0.747 0.750	— 14.2	230 —	40	18.50	1.40	0710	0.713	3.33	0.837	0.841

Equivalence Table

	ESCC Specification	ESCC Component Number	TE Part Number
Contacts for DBAS sealed receptacles and plugs, size 8 to size 20	ESCC No. 3401/009	340100901B 340100902B 340100903B 340100904B 340100905B 340100906B 340100907B 340100908B 340100909B 340100910B 340100911B 340100912B 340100913B 340100914B 340100915B 340100916B 340100917B 340100918B 340100919B 340100920B	006-0937-20 SCC 006-0912-20 SCC 006-0044-20 SCC 006-0055-20 SCC 006-0972-20 SCC 006-0973-20 SCC 006-0937-16 SCC 006-0912-16 SCC 006-1168-16 SCC 006-1169-16 SCC 006-0937-12 SCC 006-0912-12 SCC 006-1157-12 SCC 006-1159-12 SCC 006-0041-08 SCC 006-0040-08 SCC 005-0257-08 SCC Consult us 005-0893-08 SCC 005-0896-08 SCC
Contacts for DBAS sealed receptacles and plugs, size 22	ESCC No. 3401/012	340101201B	028-0108-22 SCC 029-0100-22 SCC
		340101202B	028-0113-22 SCC 029-0101-22 SCC
		340101203B	DF 28-046-22 C SCC
		340101204B	DF 28 A 047-22 C SCC

Connect With Us

We make it easy to connect with our experts and are ready to provide all the support you need.
Visit **te.com/support** to chat with a Product Information Specialist.

te.com/deutschdbas

AMP, AGASTAT, CII, DEUTSCH, HARTMAN, KILOVAC, MICRODOT, NANONICS, POLAMCO, Raychem, Rochester, SEACON, TE, TE Connectivity, and TE connectivity (logo) are trademarks owned or licensed by TE Connectivity. All other logos, products and/or company names referred to herein might be trademarks of their respective owners.

The information given herein, including drawings, illustrations and schematics which are intended for illustration purposes only, is believed to be reliable. However, TE Connectivity makes no warranties as to its accuracy or completeness and disclaims any liability in connection with its use. TE Connectivity's obligations shall only be as set forth in TE Connectivity's Standard Terms and Conditions of Sale for this product and in no case will TE Connectivity be liable for any incidental, indirect or consequential damages arising out of the sale, resale, use or misuse of the product. Users of TE Connectivity products should make their own evaluation to determine the suitability of each such product for the specific application.

© 2021 TE Connectivity All Rights Reserved.

1-1773856-8 03/21

DEUTSCH DBAS SERIES CONNECTORS

TE Connectivity
Aerospace, Defense & Marine
2900 Fulling Mill Road
Middletown, PA 17057