INDUSTRIAL
CINCH

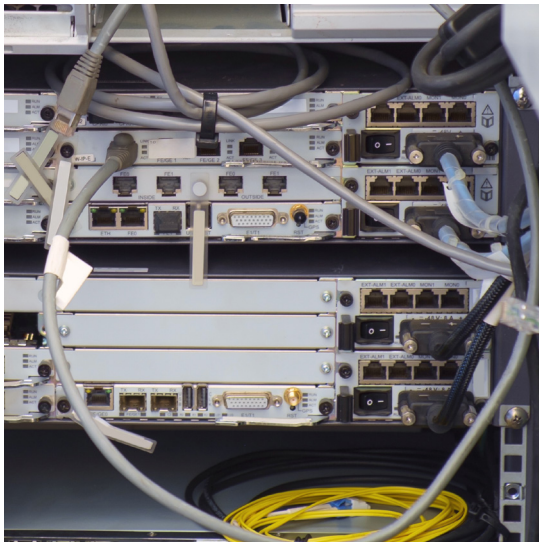

D-Subminiature

Connectors Catalogue

cinch
CONNECTIVITY SOLUTIONS
a bel group

belfuse.com/cinch

About Bel

Bel is a publicly traded company that has been operated by the same family for over 65 years. Our history of organic growth and acquisitions have broadened our product portfolio. This has established Bel as a world leader with a diverse offering of power, protection and interconnect products. We design and manufacture these products which are primarily used in the networking, telecommunications, computing, military, aerospace, transportation and broadcasting industries. Bel's portfolio of products also finds application in the automotive, medical and consumer electronics markets.

About Cinch Connectivity Solutions

For over 100 years, Cinch Connectivity Solutions has manufactured high quality and reliable high performance connectors and cable assemblies. Cinch is recognized as a world class connectivity supplier of RF, fiber optic, hybrid, microwave components, circular, d-subminiatures, modular rectangular, electronic enclosures and cable assemblies. Cinch provides innovative solutions to the military, commercial aerospace, networking, telecommunication, test and measurement, oil and gas and other harsh environment industries. We aim to exceed our customers' expectations and continually offer innovative solutions to the rapidly changing needs of the markets and customers we serve.

Along with our parent company, Bel Fuse Inc., our mission is to provide products and services using established quality standards and to meet our customer expectations. To fulfill this objective, we strive to produce components and assemblies that embody optimum levels of reliability and performance in their design, manufacture, and delivery. Cinch Connectivity Solutions has consistently proven to be a valuable supplier to the foremost companies in its chosen industries by developing cost effective solutions for the challenges of new product development.

About Industrial D-Subminiature Connectors

The D-subminiature is one of the most popular styles of connectors in the I/O category. It is used in computer, telecom, datacom, medical, and test instrumentation applications as well as in the military and aerospace fields.

Types of D-subminiature connectors manufactured by Cinch

Printed Circuit Board connectors:

- Vertical connectors for panel mounting with Dip Solder PC tails.
- Right-Angle connectors for board mounting with Dip Solder PC tails.

Connectors for cable assemblies or wire harnesses:

- Crimp and Poke.
- Solder Cup.
- Insulation Displacement (IDC) to terminate discrete wire.
- Wire Wrap.

Introduction

How to read this section

The information pages provide standard data common to all D-subminiature connectors. These include:

- D-subminiature contact arrangements - see page 4.
- Panel mounting specifications/hardware - see page 5.
- D-subminiature shell dimensions - see page 6.
- PCB thickness chart and PCB layout dimensions - see page 7.

D-subminiature pages are grouped by series. A series is a family of connectors with a similar performance level. Each series shares a set of features and specifications, from economical and commercial grade product to high-reliability and military connectors. Each series begins with a page outlining general features and specifications of connectors, followed by the pages on individual connectors with drawings or features specific to that connector. Drawings reflect clarifications of dimensions not called out in the information pages of this catalog.

Accessories including backshells, junction shells, and hoods as well as hardware can be found on pages 34 thru 50.

Termination tooling for Cinch connectors can be found at the end of the D-subminiature catalog.

General Information

All connectors are intermateable with any Cinch D-subminiature of comparable pin count and density, or the D-sub connector of any other manufacturer complying dimensionally with MIL-C-24308.

Solder terminations and boardlocks meet the requirements for solderability in accordance with MIL-STD-202, Method 208.

DURABILITY

Mated connectors are subjected to cycles of insertions and withdrawals specified on the catalog page. After the prescribed cycles the connectors will meet the Cinch requirements concerning insertion withdrawal force, individual contact insertion-withdrawal force, and contact resistance.

APPROVALS

Most Cinch connectors have UL recognition and CSA approval; however, the specific approvals are listed on the individual catalog pages.

CONTACTS

Cinch connector contacts are generally offered in Gold Flash or 30µin. gold plating for commercial product, and 50µin. gold plating for M24308 Series Military D-subminiature connectors.
Cinch connectors utilize economical stamped and formed contacts and/or screw machine contacts for enhanced performance.
Standard density connectors utilize size 20 contacts.

METAL SHELLS

Commercial-grade steel shells are usually available in zinc plating with yellow or clear chromate finish or tin plating.
Tin-plated plugs have grounding indents.
Military grade M24308 Series connector shells are generally steel cadmium plating and yellow chromate finish.
Insulator materials are glass-filled polyester, glass-filled nylon, and diallyl phthalate.
The connectors are usually available in plugs and sockets in 9, 15, 25, 37, and 50 position sizes.

Introduction

Printed Circuit Board Connectors

Cinch provides connectors in various footprints, contact diameters, and lengths in both vertical and right-angle PC mount styles with dip solder tails.

Cinch PCB connectors have metal shells.

Connectors for Terminating Cable Wire

Wire Wrap connectors are available in two tail lengths for two-wrap and three-wrap terminations. The contact is terminated by wrapping wire around it using a wire wrap gun. This connector is especially useful for prototyping since the wire can be unwrapped and rewrapped if necessary.

Solder Cup connectors allow reliable long-term termination by soldering the wire directly into the connector contact. Cinch Solder Cups accommodate up to 20 AWG wire.

Crimp and Poke connectors allow the wire to be terminated more economically than wire wrap or solder cup styles. Contacts are crimped and inserted into the connector. In our D*U Series, the contact is crimped around the conductor wire. Crimp and Poke connectors can be selectively loaded to save labor and material cost.

Contact Arrangements

Standard Density Plug Inserts

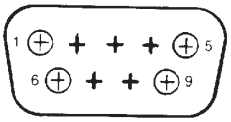

Shell Size E
(9 Position)

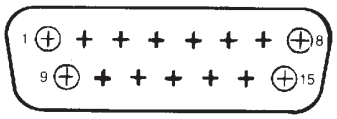

Shell Size A
(15 Position)

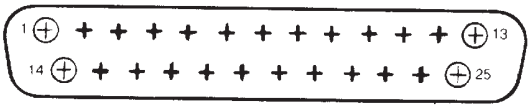

Shell Size B
(25 Position)

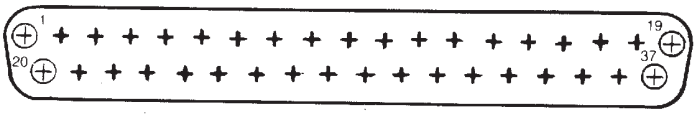

Shell Size C
(37 Position)

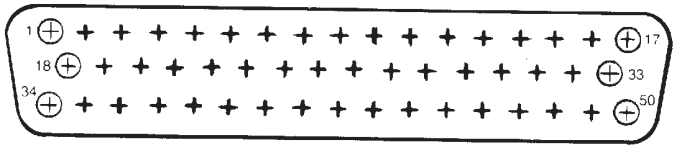

Shell Size D
(50 Position)

Introduction - Shells and Mounts

Panel Mounting Specifications

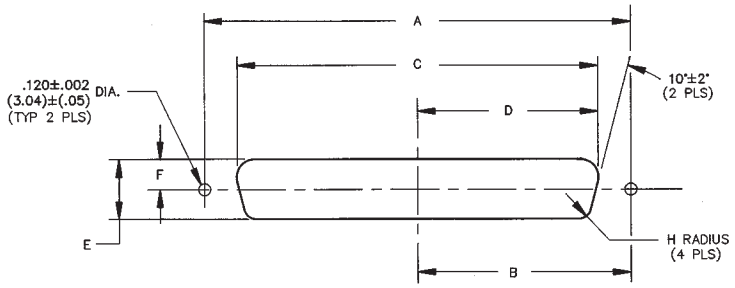

Dimensions

Shell Size	Mounting Method Positions	Front/ Rear Panel	A in	A mm	B in	B mm	C in	C mm	D in	D mm	E in	E mm	F in	F mm	H in	H mm
E	9	Front	0.98	24.89	0.49	12.45	0.87	22.10	0.44	11.18	0.42	10.67	0.26	6.60	0.08	2.03
		Rear	0.98	24.89	0.49	12.45	0.81	20.57	0.40	10.16	0.45	11.43	0.23	5.84	0.13	3.30
A	15	Front	1.31	33.27	0.66	16.76	1.10	27.94	0.60	15.24	0.42	10.67	0.26	6.60	0.08	2.03
		Rear	1.31	33.27	0.66	16.76	1.13	28.70	0.57	14.48	0.45	11.43	0.23	5.84	0.13	3.30
B	25	Front	1.85	46.99	0.93	23.62	1.74	44.20	0.87	22.10	0.42	10.67	0.26	6.60	0.08	2.03
		Rear	1.85	46.99	0.93	23.62	1.67	42.42	0.84	21.34	0.45	11.43	0.23	5.84	0.13	3.30
C	37	Front	2.50	63.50	1.25	31.75	2.39	60.71	1.20	30.48	0.42	10.67	0.26	6.60	0.08	2.03
		Rear	2.50	63.50	1.25	31.75	2.33	59.18	1.16	29.46	0.45	11.43	0.23	5.84	0.13	3.30
D	50	Front	2.41	61.21	1.20	30.48	2.30	58.42	1.15	29.21	0.62	15.75	0.31	6.60	0.08	2.03
		Rear	2.41	61.21	1.20	30.48	2.22	56.39	1.11	28.19	0.56	14.22	0.28	5.84	0.13	3.30

Panel mounting hardware

Aids in alignment of plug and receptacle

Float Bushing

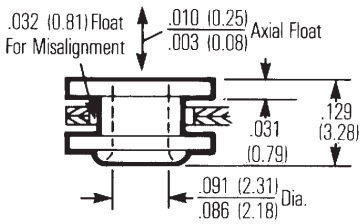

Rear panel mounting

4-40 Clinch Nut

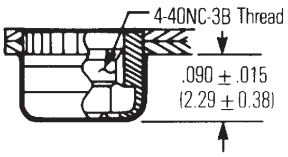

Rear panel mounting

Introduction - Shells and Mounts

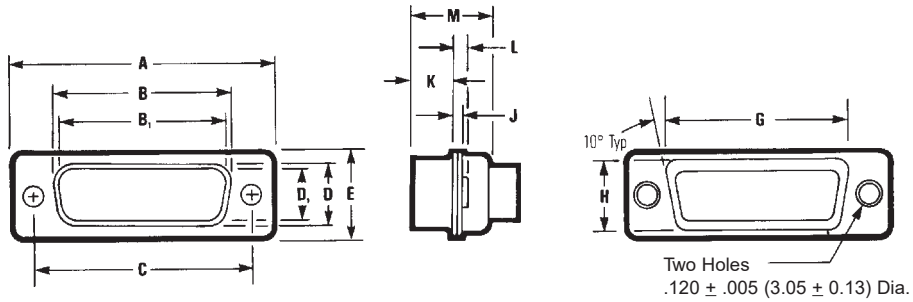

Mating side

Termination Side

Shell Size	Positions	Connector Type	A ± .015" (0.38mm)		B ± .010" (0.25mm)		B_1 ± .005" (0.13mm)		C ± .005" (0.13mm)		D ± .010" (0.25mm)		D_1 ± .010" (0.25mm)		E ± .010" (0.25mm)	
			in	mm	in	mm	in	mm	in	mm	in	mm	in	mm	in	mm
E	9	Plug	1.213	30.81	--	--	.666	16.90	0.984	24.99	--	--	.329	8.40	.494	12.55
		Socket	1.213	30.81	.640	16.26	--	--	0.984	24.99	.308	7.82	--	--	.494	12.55
A	15	Plug	1.541	39.14	--	--	.994	25.30	1.312	33.32	--	--	.329	8.40	.494	12.55
		Socket	1.541	39.14	.968	24.59	--	--	1.312	33.32	.308	7.82	--	--	.494	12.55
B	25	Plug	2.088	53.04	--	--	1.534	39.00	1.852	47.04	--	--	.329	8.40	.494	12.55
		Socket	2.088	53.04	1.508	38.30	--		1.852	47.04	.308	7.82	--	--	.494	12.55
C	37	Plug	2.729	69.32	--	--	2.182	55.40	2.500	63.50	--	--	.329	8.40	.494	12.55
		Socket	2.729	69.32	2.156	54.76	--	--	2.500	63.50	.308	7.82	--	--	.494	12.55
D	50	Plug	2.635	66.93	--	--	2.079	52.80	2.406	61.11	--	--	.436	11.07	.605	15.37
		Socket	2.635	66.93	2.062	52.34	--	--	2.406	61.11	.420	10.67	--	--	.605	15.37

Shell Size	Positions	Connector Type	G ± .010" (0.25mm)		H ± .010" (0.25mm)		J ± .010" (0.25mm)		K ± .005" (0.25mm)		L ± .010" (0.25mm)		M ± .010" (0.25mm)	
			in	mm	in	mm	in	mm	in	mm	in	mm	in	mm
E	9	Plug	.759	19.28	.422	10.72	0.30	0.76	.236	5.99	0.45	1.14	.422	10.72
		Socket	.759	19.28	.422	10.72	0.30	0.76	.243	6.17	0.45	1.14	.429	10.92
A	15	Plug	1.083	27.51	.422	10.72	0.30	0.76	.236	5.99	.045	1.14	.422	10.72
		Socket	1.083	27.51	.422	10.72	0.30	0.76	.236	6.17	.045	1.14	.429	10.92
B	25	Plug	1.625	41.27	.422	10.72	0.39	0.99	.231	5.87	.060	1.52	.426	10.82
		Socket	1.625	41.27	.422	10.72	0.30	0.76	.243	6.17	.045	1.14	.429	10.92
C	37	Plug	2.272	57.71	.422	10.72	0.39	0.99	.231	5.87	.060	1.52	.426	10.82
		Socket	2.272	57.71	.422	10.72	0.30	0.76	.243	6.17	.045	1.14	.429	10.92
D	50	Plug	2.178	55.32	.534	13.56	.039	0.99	.231	5.87	.060	1.52	.426	10.82
		Socket	2.178	55.32	.534	13.56	.030	0.76	.243	6.17	.045	1.14	.429	10.92

Introduction - Printed Circuit Board Layout Hole Dimensions

Standard Density D-Subminiature Mounting Dimensions Board Layouts Footprints (Component side shown)

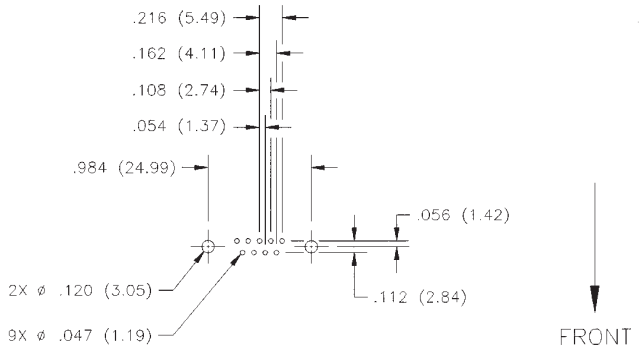

9 Position
Shell Size E

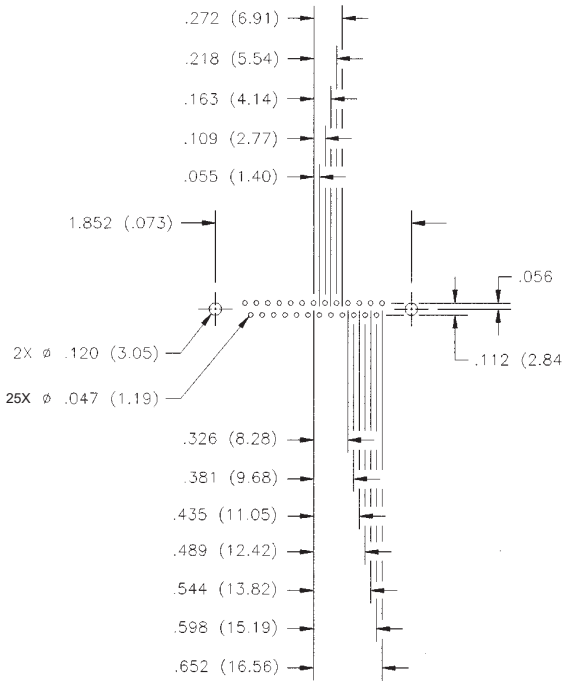

25 Position
Shell Size B

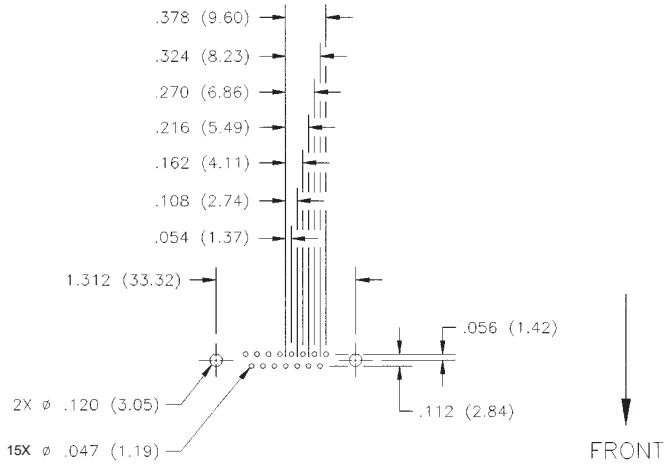

15 Position
Shell Size A

PC Board Lead Hole Size

Terminal in	Dia. mm	Hole Dia. in	Hole Dia. mm
.040	1.02	.055	1.40
.030	0.76	.045	1.14
.024-.025	0.61-0.64	.039	0.99

The footprints on this page are standard for all metal shell D-subminiature connectors.
On all right-angle D-subminiature connectors, the short row of contacts is positioned closest to the edge of the board.

Introduction - Printed Circuit Board Layout Hole Dimensions

Standard Density D-Subminiature Mounting Dimensions Board Layouts Footprints (Component side shown)

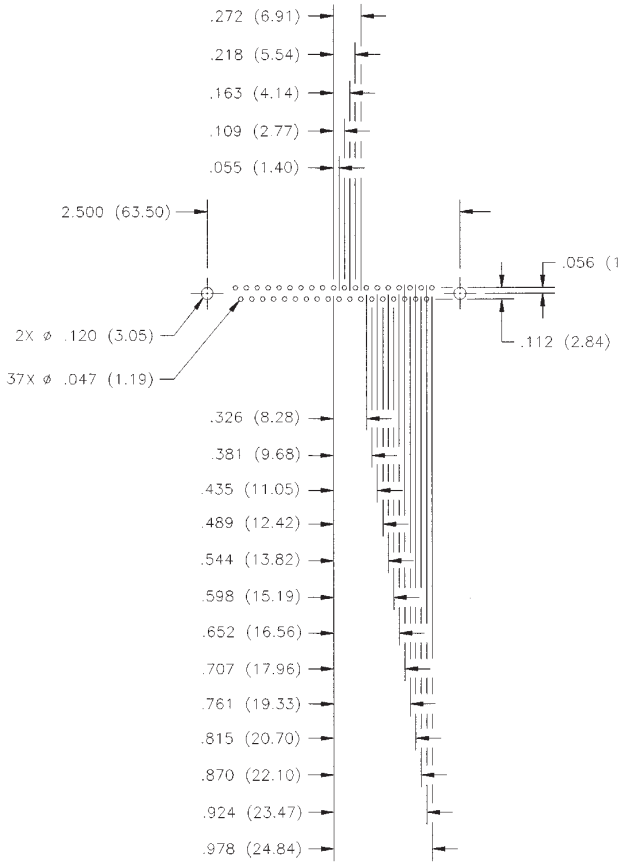

37 Position
Shell Size C

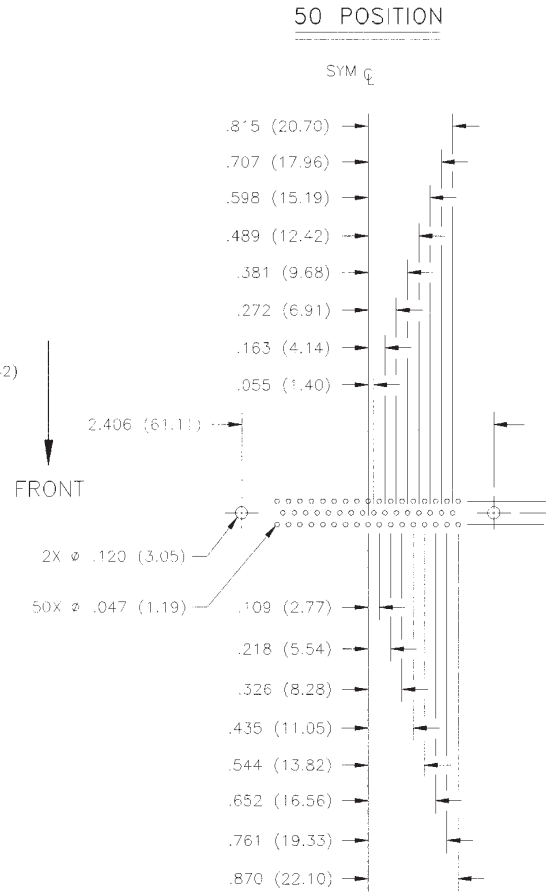

50 Position
Shell Size D

PC Board Lead Hole Size

Terminal in	Dia. mm	Hole Dia. in	Hole Dia. mm
.040	1.02	.055	1.40
.030	0.76	.045	1.14
.024-.025	0.61-0.64	.039	0.99

The footprints on this page are standard for all metal shell D-subminiature connectors.
On all right-angle D-subminiature connectors, the short row of contacts is positioned closest to the edge of the board.

D-Subminiature Metal Shell Crimp And Poke

Features

- Offered in 9, 15, 25, 37, and 50 position plugs and sockets
- Available with gold flash or 30µin. gold plating.
- Offered with .120 mounting holes, optional 4-40 clinch nuts, or dual float bushings
- Approvals:
- UL Recognized - Files E170218 (UL1977) and E130965 (UL1863).
- CSA Approved - File LR31996.
- See pages 5-6 for standard dimensions, contact arrangements, and panel mounting specifications.

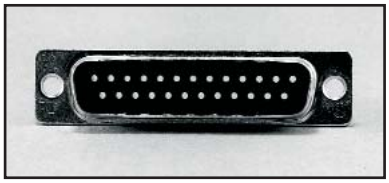

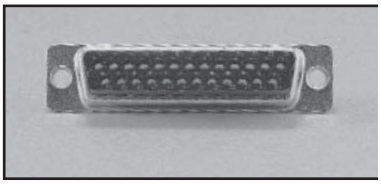

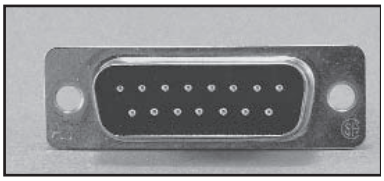

Material Specifications

Insulator Material	Glass-filled nylon (black), UL 94 V-O rated
Connector Shell	Steel with zinc plating and yellow chromate finish or clear for RoHS or tin plating (grounding indents on plug)
4-40 Clinch Nut	Steel with cadmium plating and yellow chromate finish
Dual Float Bushing	Stainless steel, passivated

Environmental Specifications

Operating Temperature	-65°C to +105°C
Shock	50G peak per MIL-STD-202, Method 213, Condition G
Vibration	12 cycles in three perpendicular directions @ 10-2000Hz, per MIL-STD-202, Method 204, Condition D
Moisture Resistance	90-95% relative humidity @ 40ºC for 96 hours per MIL-STD-202, Method 103

Electrical Specifications

Withstanding Voltage	Minimum 1000V RMS @ sea level
Current Rating	5 Amps
Contact Resistance	2.7 milliohms maximum
Insulation Resistance	5000 megohms minimum (initial); 1000 megohms (minimum) after environmental testing

Mechanical Specifications

Individual Contact Insertion and Separation Force	0.7 oz. minimum/12oz. maximum
Durability	500 mating cycles

D-Subminiature Metal Shell Crimp And Poke D*U Series

Machined contacts supplied loose with connector or can be ordered separately. Use with 20-24 AWG wire.

Materials

Contact Material	Plug - Brass (stamped) or copper alloy (machined). Socket - Phosphor bronze (stamped) copper alloy (machined).
Contact Plating	Machined Plugs and Sockets: Golf flash or 30µin. gold. All over nickel

Termination Tooling

Contact Insertion/Extraction:

- #CIET-20-HDB. See page 51.

Loose Contact Crimp Tool:

- Machined Contact - #M22520/2-01. See page 51.
- For Positioner as required - EP-580. See page 51.

Ordering Information - D*U Crimp and Poke Plugs

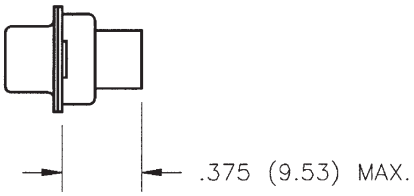

Zinc-Plated Shell with Chromate FInish

Positions	Yellow Chromate				RoHS Compliant with Clear Chromate			
	Mounting Holes		4-40 Clinch Nuts		Mounting Holes		4-40 Clinch Nuts	
	Contacts Included	Without Contacts	Contacts Included	Without Contacts	Contacts Included	Without Contacts	Contacts Included	Without Contacts
9	DEU-9P	DEU-9P-FO	DEUE-9P	DEUE-9P-FO	DEUH-9P	DEUH-9P-FO	DEUEH-9P	DEUEH-9P-FO
15	DAU-15P	DAU-15P-FO	DAUE-15P	DAUE-15-P-FO	DAUH-15P	DAUH-15P-FO	DAUEH-15P	DAUEH-15P-FO
25	DBU-25P	DBU-25P-FO	DBUE-25P	DBUE-25P-FO	DBUH-25P	DBUH-25P-FO	DBUEH-25P	DBUEH-25P-FO
37	DCU-37P	DCU-37P-FO	DCUE-37P	DCUE-37P-FO	DCUH-37P	DCUH-37P-FO	DCUEH-37P	DCUEH-37P-FO
50	DDU-50P	DDU-50P-FO	DDUE-50P	DDUE-50P-FO	DDUH-50P	DDUH-50P-FO	DDUEH-50P	DDUEH-50P-FO

Tin-Plated Shell with Grounding Indents

Positions	Mounting Holes		4-40 Clinch Nuts	
	Contacts Included	Without Contacts	Contacts Included	Without Contacts
9	DEU-9PTI	DEU-9PTI-FO	DEUE-9-PTI	DEUE-9PTI-FO
15	DAU-15PTI	DAU-15PTI-FO	DAUE-15-PTI	DAUE-15PTI-FO
25	DBU-25PTI	DBU-25PTI-FO	DBUE-25-PTI	DBUE-25PTI-FO
37	DCU-37PTI	DCU-37PTI-FO	DCUE-37-PTI	DCUE-37PTI-FO
50	DDU-50PTI	DDU-50PTI-FO	DDUE-50-PTI	DDUE-50PTI-FO

D*U Crimp and Poke Sockets

Positions	Yellow Chromate				RoHS Compliant			
	Mounting Holes		4-40 Clinch Nuts		Mounting Holes		4-40 Clinch Nuts	
	Contacts Included	Without Contacts	Contacts Included	Without Contacts	Contacts Included	Without Contacts	Contacts Included	Without Contacts
9	DEU-9S	DEU-9S-FO	DEUE-9S	DEUE-9S-FO	DEUH-9S	DEUH-9S-FO	DEUEH-9S	DEUEH-9S-FO
15	DAU-15S	DAU-15S-FO	DAUE-15S	DAUE-15S-FO	DAUH-15S	DAUH-15S-FO	DAUEH-15S	DAUEH-15S-FO
25	DBU-25S	DBU-25S-FO	DBUE-25S	DBUE-25S-FO	DBUH-25S	DBUH-25S-FO	DBUEH-25S	DBUEH-25S-FO
37	DCU-37S	DCU-37S-FO	DCUE-37S	DCUE-37S-FO	DCUH-37S	DCUH-37S-FO	DCUEH-37S	DCUEH-37S-FO
50	DDU-50S	DDU-50S-FO	DDUE-50S	DDUE-50S-FO	DDUH-50S	DDUH-50S-FO	DDUEH-50S	DDUEH-50S-FO

Tin-Plated Shell

Positions	Mounting Holes		4-40 Clinch Nuts	
	Contacts Included	Without Contacts	Contacts Included	Without Contacts
9	DEU-9ST	DEU-9ST-FO	DEUE-9ST	DEUE-9ST-FO
15	DAU-15ST	DAU-15ST-FO	DAUE-15ST	DAUE-15ST-FO
25	DBU-25ST	DBU-25ST-FO	DBUE-25ST	DBUE-25ST-FO
37	DCU-37ST	DCU-37ST-FO	DCUE-37ST	DCUE-37ST-FO
50	DDU-50ST	DDU-50ST-FO	DDUE-50ST	DDUE-50ST-FO

D-Subminiature Metal Shell Crimp And Poke Contacts D*U Series

Machined Contacts • 20-24 AWG Wire

Plug Socket

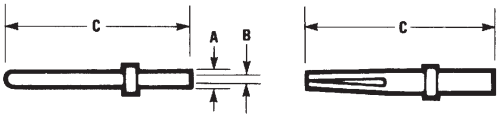

Dimensions

	Wire	A		B		C Max.	
Description	AWG	in	mm	in	mm	in	mm
Pin	#20, 22, 24	.066	1.67	.045	1.14	.537	13.64
Socket	#20, 22, 24	.066	1.67	.045	1.14	.523	13.28

Ordering Information

D*U Series Loose-Piece Machined Contacts

	Gold Flash	30µin. Gold
Pin	030-1952-000	030-1952-030
Socket	030-1953-000	030-1953-030

D-Subminiature All Plastic Idc T* Series

Features

- Offered in 9, 15, 25, and 37 position plugs and sockets.
- IDC (insulation displacement) terminations for discrete wire.
- Offered with .120 mounting holes.
- Approvals:
  - UL Recognized - Files E170218 (UL1977) and E130965 (UL1863).
  - CSA Approved - File LR31996.
- See pages 5-6 for standard dimensions, contact arrangements, and panel mounting specifications.

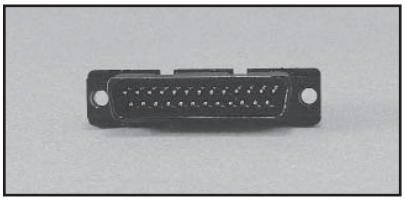

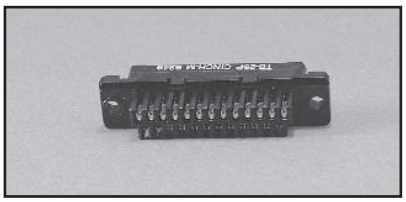

Material Specifications

Insulator Material	Glass-filled polyester (black), UL 94 V-O rated
Contact Material	Phosphor bronze (stamped)
Contact Plating	Gold flash or 30µin. gold in mating area and gold flash on the remainder. All over nickel.

Environmental Specifications

Operating Temperature	-65°C to +125°C
Shock	50G peak per MIL-STD-202, Method 213, Condition G
Vibration	12 cycles in three perpendicular directions @ 10-2000Hz, per MIL-STD-202, Method 204, Condition D
Moisture Resistance	90-95% relative humidity @ 40ºC for 96 hours per MIL-STD-202, Method 103

Electrical Specifications

Withstanding Voltage	Minimum 1000V RMS @ sea level
Current Rating	3 Amps
Contact Resistance	2.7 milliohms maximum
Insulation Resistance	5000 megohms minimum (initial); 1000 megohms (minimum) after environmental testing

Mechanical Specifications

Individual Contact Insertion and Separation Force	0.7 oz. minimum/12oz. maximum
Durability	500 mating cycles

D-Subminiature Metal Shell IDC For Discrete Cable Wire T* Series

Optional strain relief covers for connectors when backshell is not required.

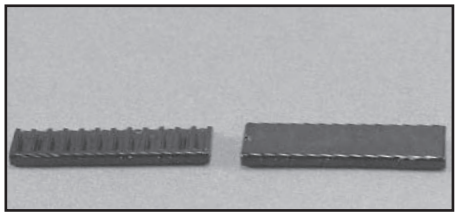

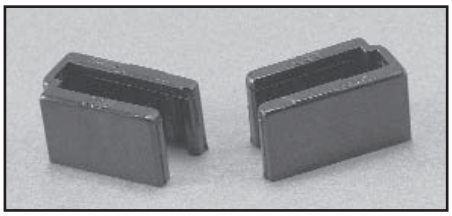

Ordering Information

Positions	Catalog No.
9	SSD-WC9
15	SSD-WC15
25	SSD-WC25
37	SSD-WC37

- One-piece cover for 9 contact size. Order one per connector. Two-piece cover for other sizes. Order two per connector.
- Cover fits both plug and socket.

D-Subminiature All-Plastic IDC For Discrete Cable Wire T* Series

- For use only with SDH Series Gray Backshell on page 41.
- Offered in 9, 15, 25, and 37 position plugs and sockets.
- Connector will accommodate 24-28 AWG wire.
- Offered with plain flanges with .120 mounting holes.
- Uni-Clinch D Single-Wire Hand Insertion Tool #SD-UC: See page 50 or 51.
- Super D Manual Stay Band Tool #SD-MSBT: See page 50 or 51.

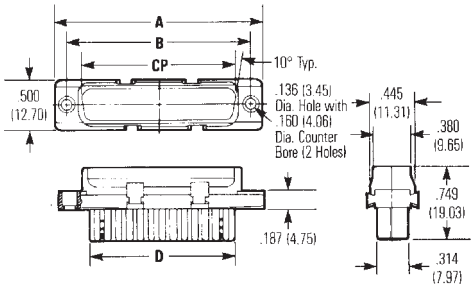

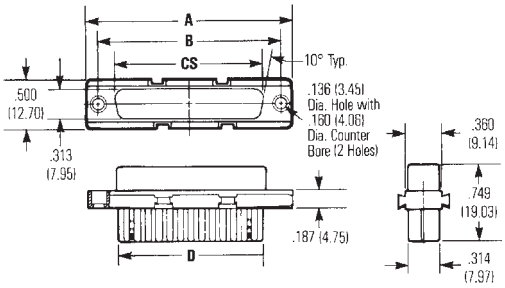

Dimensions

	A		A		B		CP		CS		D	
Positions	in	mm	in	mm	in	mm	in	mm	in	mm	in	mm
9	1.209	30.71	1.309	33.25	.984	24.99	.668	16.96	.642	16.31	.592	15.04
15	1.536	39.01	1.636	41.55	1.312	33.32	.995	25.28	.970	24.64	.918	23.31
25	2.079	52.81	2.179	55.35	1.852	47.04	1.535	38.99	1.512	38.40	1.462	37.13
37	2.724	69.19	2.824	71.73	2.500	63.50	2.183	55.45	2.158	54.81	2.114	53.70

Ordering Information

IDC All-Plastic Plugs Plain Flange

	RoHS Compliant	
		Mounting Holes
Positions	Gold Flash	Gold Flash
9	TE-9P	TEH9P
15	TA-15P	TAH15P
25	TB-25P	

IDC All-Plastic Sockets Plain Flange

	RoHS Compliant	
		Mounting Holes
Positions	Gold Flash	Gold Flash
9	TE-9S	TEH9S
15	TA-15S	TAH15S
25	TB-25S	

D-Subminiature Metal Shell Solder Cup, Vertical PCB Mount, and Wire Wrap Basic D Series

Features

- Offered in Wire Wrap and Solder Cup styles for wire termination and vertical style for PCB mount.
- Offered with .120 mounting holes, 4-40 clinch nuts, and dual float bushings.
- Offered in 9, 15, 25, 37, and 50 position plugs and sockets.
- Gold flash contacts.
- Approvals:
- UL Recognized - Files E170218 (UL1977) and E130965 (UL1863).
- CSA Approved - File LR31996.
- See pages 5-6 for standard dimensions, contact arrangements, and panel mounting specifications.

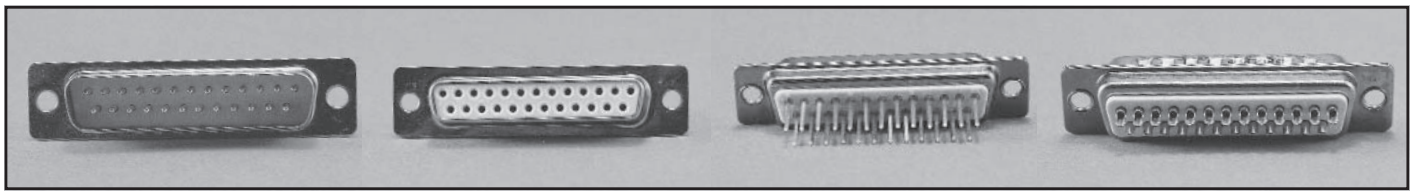

Material Specifications

Insulator Material	Glass-filled polyester (white), UL 94 V-O rated
Connector Shell	Steel with zinc plating and yellow chromate finish, RoHS clear chromate or tin plating (grounding indents on plug)
4-40 Clinch Nut	Steel with cadmium plating and yellow chromate finish
Dual Float Bushing	Stainless Steel, passivated

Environmental Specifications

Operating Temperature	-65°C to +125°C
Shock	50G peak per MIL-STD-202, Method 213, Condition G
Vibration	12 cycles in three perpendicular directions @ 10-2000Hz, per MIL-STD-202, Method 204, Condition D
Moisture Resistance	90-95% relative humidity @ 40ºC for 96 hours per MIL-STD-202, Method 103

Electrical Specifications

Withstanding Voltage	Minimum 1250V RMS @ sea level
Current Rating	5 Amps
Contact Resistance	2.7 milliohms maximum
Insulation Resistance	5000 megohms maximum (initial); 1000 megohms (minimum) after environmental testing

Mechanical Specifications

Individual Contact Insertion and Separation Force	0.7 oz. minimum/12oz. maximum
Durability	500 mating cycles

D-Subminiature Metal Shell Solder Cup Basic D Series

- Stamped contacts.
- Will accommodate up to 20 AWG wire.

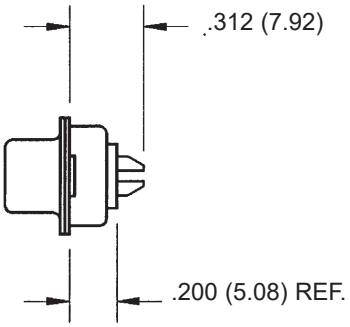

Material Specifications

Contact Material	Copper Alloy
Contact Plating	Stamped contacts with gold flash in mating area, gold flash on remainder. All over nickel.

Ordering Information Solder Cup Plugs

Zinc-Plated Shell with Chromate Finish
Stamped Contact with Gold Flash in Solder Cup

	Yellow Chromate		RoHS Compliant with Clear Chromate	
	Mounting	Holes	Mounting Holes	4-40 Clinch Nuts
Positions	**Gold Flash**	**Gold Flash**	**Gold Flash**	**Gold Flash**
9	DE-9P	DEE-9P	DEH-9P	DEEH-9P
15	DA-15P	DAE-15P	DAH-15P	DAEH-15P
25	DB-25P	DBE-25P	DBH-25P	DBEH-25P
37	DC-37P	DCE-37P	DCH-37P	DCEH-37P
50	DD-50P	DDE-50P	DDH-50P	DDEH-50P

Tin-Plated Shell with Ground Indents
Stamped Contact with Gold Flash in Solder Cup

	Mounting Holes	4-40 Clinch Nuts	Dual Float Bushings
Positions	**Gold Flash**	**Gold Flash**	**Gold Flash**
9	DE-9PTI	DEE-9PTI	DEY-9PTI
15	DA-15PTI	DAE-15PTI	DAY-15PTI
25	DB-25PTI	DBE-25PTI	DBY-25PTI
37	DC-37PTI	DCE-37PTI	DCY-37PTI
50	DD-50PTI	DDE-50PTI	DDY-50PTI

D-Subminiature Metal Shell Solder Cup Basic D Series

Ordering Information Solder Cup Sockets

Zinc-Plated Shell with Chromate Finish
Stamped Contact with Gold Flash in Solder Cup

	Yellow Chromate		RoHS Compliant with Clear Chromate	
	Mounting Holes	4-40 Clinch Nuts	Mounting Holes	4-40 Clinch Nuts
Positions	Gold Flash	Gold Flash	Gold Flash	Gold Flash
9	DE-9S	DEE-9S	DEH-9S	DEEH-9S
15	DA-15S	DAE-15S	DAH-15S	DAEH-15S
25	DB-25S	DBE-25S	DBH-25S	DBEH-25S
37	DC-37S	DCE-37S	DCH-37S	DCEH-37S
50	DD-50S	DDE-50S	DDH-50S	DDEH-50S

Tin-Plated Shell
Stamped Contact with Gold Flash in Solder Cup

	Mounting Holes	4-40 Clinch Nuts
Positions	Gold Flash	Gold Flash
9	DE-9ST	DEE-9ST
15	DA-15ST	DAE-15ST
25	DB-25ST	DBE-25ST
37	DC-37ST	DCE-37ST
50	DD-50ST	DDE-50ST

D-Subminiature Metal Shell Vertical Dip Solder

PCB Basic D Series

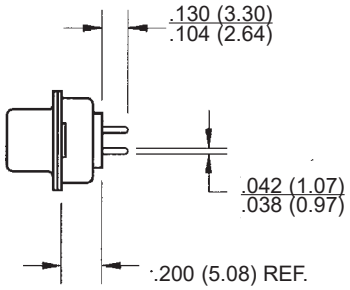

- .040" contact diameter.
- Short rear insulator provides low profile on PCB.
- Offered with .120 mounting holes, dual float bushings, or optional 4-40 clinch nuts.

Material Specifications

Contact Material	Socket - Phosphor bronze (machined). Plug - Brass (machined).
Contact Plating	Gold flash or 30µin. gold. All over nickel.

Ordering Information

Vertical PCB Plugs

	Zinc-Plated Shell with Yellow Chromate Finish		Tin-Plated Shell with Grounding Indents	
	Mounting Holes	4-40 Clinch Nuts	Mounting Holes	4-40 Clinch Nuts
Positions	Gold Flash	Gold Flash	Gold Flash	Gold Flash
9	DE-9PV	DEE-9PV	DE-9PVTI	DEE-9PVTI
15	DA-15PV	DAE-15PV	DA-15PVTI	DAE-15PVTI
25	DB-25PV	DBE-25PV	DB-25PVTI	DBE-25PVTI
37	DC-37PV	DCE-37PV	DC-37PVTI	DCE-37PVTI
50	DD-50PV	DDE-50PV	DD-50PVTI	DDE-50PVTI

Vertical PCB Sockets

	Zinc-Plated Shell with Yellow Chromate Finish		Tin-Plated Shell	
	Mounting Holes	4-40 Clinch Nuts	Mounting Holes	4-40 Clinch Nuts
Positions	Gold Flash	Gold Flash	Gold Flash	Gold Flash
9	DE-9SV	DEE-9SV	DE-9SVT	DEE-9SVT
15	DA-15SV	DAE-15SV	DA-15SVT	DAE-15SVT
25	DB-25SV	DBE-25SV	DB-25SVT	DBE-25SVT
37	DC-37SV	DCE-37SV	DC-37SVT	DCE-37SVT
50	DD-50SV	DDE-50SV	DD-50SVT	DDE-50SVT

D-Subminiature Metal Shell Wire Wrap Basic D Series

- Reliable wire wrap termination.
- Two contact lengths: .375" or .585".
- .025" square contact tails.

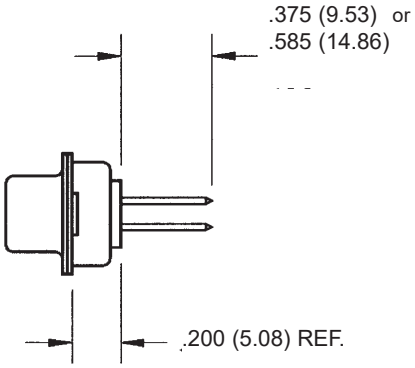

Material Specifications

Contact Material	Copper alloy (machined).
Contact Plating	Gold flash. All over nickel.

Ordering Information Wire Wrap Plugs .375" Tail Length
Zinc-Plated Shell with Chromate Finish

	Yellow Chromate		RoHS Compliant with Clear Chromate	
	Mounting Holes	4-40 Clinch Nuts	Mounting Holes	4-40 Clinch Nuts
Positions	Gold Flash	Gold Flash	Gold Flash	Gold Flash
9	DE-9P-F179	DEE-9P-F179	DEH-9P-F179	DEEH-9P-F179
15	DA-15P-F179	DAE-15P-F179	DAH-15P-F179	DAEH-15P-F179
25	DB-25P-F179	DBE-25P-F179	DBH-25P-F179	DBEH-25P-F179
37	DC-37P-F179	DCE-37P-F179	DCH-37P-F179	DCEH-37P-F179
50	DD-50P-F179	DDE-50P-F179	DDH-50P-F179	DDEH-50P-F179

Tin-Plated Shell with Grounding Indents

	Mounting Holes	4-40 Clinch Nuts
Positions	Gold Flash	Gold Flash
9	DE-9PTI-F179	DEE-9PTI-F179
15	DA-15PTI-F179	DAE-15PTI-F179
25	DB-25PTI-F179	DBE-25PTI-F179
37	DC-37PTI-F179	DCE-37PTI-F179
50	DD-50PTI-F179	DDE-50PTI-F179

D-Subminiature Metal Shell Wire Wrap Basic D Series

Ordering Information Wire Wrap Plugs .585" Tail Length

Zinc-Plated Shell with Chromate Finish

	Yellow Chromate		RoHS Compliant with Clear Chromate	
	Mounting Holes	4-40 Clinch Nuts	Mounting Holes	4-40 Clinch Nuts
Positions	Gold Flash	Gold Flash	Gold Flash	Gold Flash
9	DE-9P-F179C	DEE-9P-F179C	DEH-9P-F179C	DEEH-9P-F179C
15	DA-15P-F179C	DAE-15P-F179C	DAH-15P-F179C	DAEH-15P-F179C
25	DB-25P-F179C	DBE-25P-F179C	DBH-25P-F179C	DBEH-25P-F179C
37	DC-37P-F179C	DCE-37P-F179C	DCH-37P-F179C	DCEH-37P-F179C
50	DD-50P-F179C	DDE-50P-F179C	DDH-50P-F179C	DDEH-50P-F179C

Tin-Plated Shell with Grounding Indents

	Mounting Holes	4-40 Clinch Nuts
Positions	Gold Flash	Gold Flash
9	DE-9PTI-F179C	DEE-9PTI-F179C
15	DA-15PTI-F179C	DAE-15PTI-F179C
25	DB-25PTI-F179C	DBE-25PTI-F179C
37	DC-37PTI-F179C	DCE-37PTI-F179C
50	DD-50PTI-F179C	DDE-50PTI-F179C

D-Subminiature Metal Shell Wire Wrap Basic D Series

Ordering Information

Wire Wrap Sockets .375" Tail Length

Zinc-Plated Shell with Yellow Chromate Finish

			RoHS Compliant with Clear Chromate	
	Mounting Holes	4-40 Clinch Nuts	Mounting Holes	4-40 Clinch Nuts
Positions	Gold Flash	Gold Flash	Gold Flash	Gold Flash
9	DE-9S-F179	DEE-9S-F179	DEH-9S-F179	DEEH-9S-F179
15	DA-15S-F179	DAE-15S-F179	DAH-15S-F179	DAEH-15S-F179
25	DB-25S-F179	DBE-25S-F179	DBH-25S-F179	DBEH-25S-F179
37	DC-37S-F179	DCE-37S-F179	DCH-37S-F179	DCEH-37S-F179
50	DD-50S-F179	DDE-50S-F179	DDH-50S-F179	DDEH-50S-F179

Tin-Plated Shell

	Mounting Holes	4-40 Clinch Nuts
Positions	Gold Flash	Gold Flash
9	DE-9ST-F179	DEE-9ST-F179
15	DA-15ST-F179	DAE-15ST-F179
25	DB-25ST-F179	DBE-25ST-F179
37	DC-37ST-F179	DCE-37ST-F179
50	DD-50ST-F179	DDE-50ST-F179

Wire Wrap Sockets .585" Tail Length

Zinc-Plated Shell with Chromate Finish

	Yellow Chromate		RoHS Compliant with Clear Chromate	
	Mounting Holes	4-40 Clinch Nuts	Mounting Holes	4-40 Clinch Nuts
Positions	Gold Flash	Gold Flash	Gold Flash	Gold Flash
9	DE-9S-F179C	DEE-9S-F179C	DEH-9S-F179C	DEEH-9S-F179C
15	DA-15S-F179C	DAE-15S-F179C	DAH-15S-F179C	DAEH-15S-F179C
25	DB-25S-F179C	DBE-25S-F179C	DBH-25S-F179C	DBEH-25S-F179C
37	DC-37S-F179C	DCE-37S-F179C	DCH-37S-F179C	DCEH-37S-F179C
50	DD-50S-F179C	DDE-50S-F179C	DDH-50S-F179C	DDEH-50S-F179C

Tin Plated Shell

	Mounting Holes	4-40 Clinch Nuts
Positions	Gold Flash	Gold Flash
9	DE-9ST-F179C	DEE-9ST-F179C
15	DA-15ST-F179C	DAE-15ST-F179C
25	DB-25ST-F179C	DBE-25ST-F179C
37	DC-37ST-F179C	DCE-37ST-F179C
50	DD-50ST-F179C	DDE-50ST-F179C

D-Subminiature Metal Shell Solder Cup

Series 1 - High Reliability

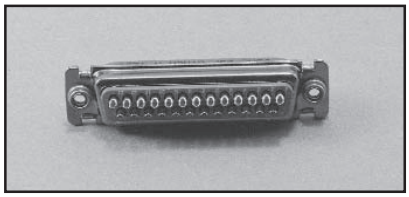

Features

- Solder cup version for wire termination.
- Commercial version of M24308 military connectors with tin-plated or zinc-plated shell and 30µin. gold plating.
- Monoblock green diallyl phthalate insulator for improved electrical performance.
- Machined contacts for precision performance.
- Offered in 9, 15, 25, 37, and 50 position plugs and sockets.
- Offered with .120 mounting holes, 4-40 clinch nuts, or dual float bushings.
- Approvals:
- UL Recognized - Files E170218 (UL1977)and E130965 (UL1863).
- CSA Approved - File LR31996.
- See pages 5-6 for standard dimensions, contact arrangements, and panel mounting specifications.

Material Specifications

Insulator Material	Glass-filled diallyl phthalate (green), UL 94 V-O rated
Connector Shell	Steel with zinc plating and yellow chromate finish, RoHS clear chromate or tin plating (grounding indents on plug)
Contact Material	Plug - Brass (machined), Socket - Phosphor bronze (machined)
Contact Plating	30µin gold over nickel
4-40 Clinch Nut	Steel with cadmium plating and yellow chromate finish
Dual Float Bushing	Stainless Steel, passivated

Environmental Specifications

Operating Temperature	-65°C to +125°C
Shock	50G peak per MIL-STD-202, Method 213, Condition G
Vibration	12 cycles in three perpendicular directions @ 10-2000Hz, per MIL-STD-202, Method 204, Condition D
Moisture Resistance	90-95% relative humidity @ 40ºC for 96 hours per MIL-STD-202, Method 103

Electrical Specifications

Withstanding Voltage	Minimum 1250V RMS @ sea level
Current Rating	5 Amps
Contact Resistance	2.7 milliohms maximum
Insulation Resistance	5000 megohms maximum (initial); 1000 megohms (minimum) after environmental testing

Mechanical Specifications

Individual Contact Insertion and Separation Force	0.7 oz. minimum/12oz. maximum
Durability	500 mating cycles

D-Subminiature Metal Shell Solder Cup

Series 1 - High Reliability

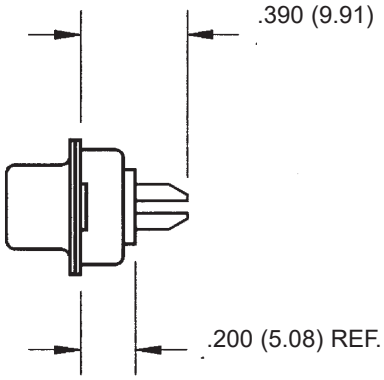

- Will accommodate up to 20 AWG wire.

Ordering Information
Solder Cup Plugs

Zinc-Plated Shell with Chromate Finish

Positions	Yellow Chromate		RoHS Compliant with Clear Chromate	
	Mounting Holes	4-40 Clinch Nuts	Mounting Holes	4-40 Clinch Nuts
	30µ" (microinches) of Gold	30µ" (microinches) of Gold	30µ" (microinches) of Gold	30µ" (microinches) of Gold
9	DEM-9P	DEME-9P	DEMH-9P	DEMEH-9P
15	DAM-15P	DAME-15P	DAMH-15P	DAMEH-15P
25	DBM-25P	DBME-25P	DBMH-25P	DBMEH-25P
37	DCM-37P	DCME-37P	DCMH-37P	DCMEH-37P
50	DDM-50P	DDME-50P	DDMH-50P	DDMEH-50P

Solder Cup Sockets

Zinc-Plated Shell with Chromate Finish

Positions	Yellow Chromate		RoHS Compliant with Clear Chromate	
	Mounting Holes	4-40 Clinch Nuts	Mounting Holes	4-40 Clinch Nuts
	30µ" (microinches) of Gold	30µ" (microinches) of Gold	30µ" (microinches) of Gold	30µ" (microinches) of Gold
9	DEM-9S	DEME-9S	DEMH-9S	DEMEH-9S
15	DAM-15S	DAME-15S	DAMH-15S	DAMEH-15S
25	DBM-25S	DBME-25S	DBMH-25S	DBMEH-25S
37	DCM-37S	DCME-37S	DCMH-37S	DCMEH-37S
50	DDM-50S	DDME-50S	DDMH-50S	DDMEH-50S

D-Subminiature Metal Shell Crimp And Poke

Series 3 - High Reliability

Features

- High-reliability in a commercial grade connector.
- Monoblock diallyl phthalate insulator for improved electrical performance.
- Offered in 9, 15, 25, 37, and 50 position plugs and sockets.
- Offered with .120 mounting holes and 4-40 clinch nuts.
- Commercial version of M24308 Military connectors with tin-plated or zinc-plated shell and 30µin. gold contact plating.
- Screw Machine Crimp and Poke contacts available as follows:
- Note that all contacts are packed loose.
- Plating options: 30µin. gold.
- Can be included with the connector or purchased separately (FO part numbers).
- See pages 5-6 for standard dimensions, contact arrangements, and panel mounting specifications.

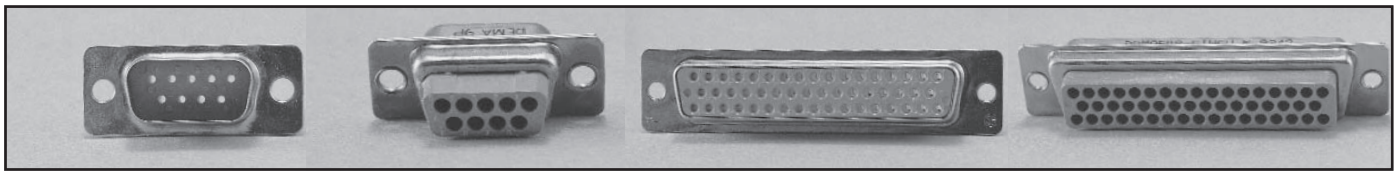

Material Specifications

Insulator Material	Glass fiber-filled diallyl phthalate (green), UL 94 V-O
Connector Shell	Steel with zinc plating and yellow chromate finish, clear chromate or tin plated
Contact Material	Plug - Brass (machined), Socket - Phosphor bronze (machined)
Contact Plating	30µin gold over nickel
4-40 Clinch Nut	Steel with cadmium plating and yellow chromate finish
Dual Float Bushing	Stainless Steel, passivated

Environmental Specifications

Operating Temperature	-65°C to +125°C
Shock	50G peak per MIL-STD-202, Method 213, Condition G
Vibration	12 cycles in three perpendicular directions @ 10-2000Hz, per MIL-STD-202, Method 204, Condition D
Moisture Resistance	90-95% relative humidity @ 40ºC for 96 hours per MIL-STD-202, Method 103

Electrical Specifications

Withstanding Voltage	Minimum 1250V RMS @ sea level
Current Rating	5 Amps
Contact Resistance	2.7 milliohms maximum
Insulation Resistance	5000 megohms maximum (initial); 1000 megohms (minimum) after environmental testing

Mechanical Specifications

Individual Contact Insertion and Separation Force	0.7 oz. minimum/12oz. maximum
Durability	500 mating cycles

D-Subminiature Metal Shell Crimp and Poke

Series 3 - High Reliability

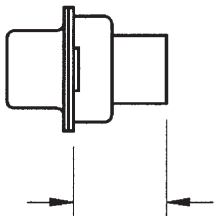

Termination Tooling

- Contact Insertion/Extraction Tool: #CIET-20-HD (Military #M81969/39-01). See p51.
- Crimp Contact Hand Tool: Military #M22520/2-01. See p51. Contact Positioner required.
- Positioner for machine contacts for Hand Tool #M22520/2-01 (locates contact in the correct position): #M22520/2-08. See p51

Ordering Information Crimp and Poke - Plugs
Zinc-Plated Shell with Chromate Finish

Positions	Yellow Chromate				RoHS Compliant with Clear Chromate	
	Mounting Holes		4-40 Clinch Nuts		Mounting Holes	4-40 Clinch Nuts
	50µin. Gold Contacts	Without Contacts	50µin. Gold Contacts	Without Contacts	50µin. Gold	Without Contacts
9	DEMA-9P	DEMA-9P-FO	DEMAE-9P	DEMAE-9P-FO	DEMAH-9P	DEMAEH-9P-FO
15	DAMA-15P	DAMA-15P-FO	DAMAE-15P	DAMAE-15P-FO	DAMAH-15P	DAMAEH-15P-FO
25	DBMA-25P	DBMA-25P-FO	DBMAE-25P	DBMAE-25P-FO	DBMAH-25P	DBMAEH-25P-FO
37	DCMA-37P	DCMA-37P-FO	DCMAE-37P	DCMAE-37P-FO	DCMAH-37P	DCMAEH-37P-FO
50	DDMA-50P	DDMA-50P-FO	DDMAE-50P	DDMAE-50P-FO	DDMAH-50P	DDMAEH-50P-FO

Tin-Plated Shells with Grounding Indents

Positions	Mounting Holes		4-40 Clinch Nuts	
	50µin. Gold Contacts	Without Contacts	50µin. Gold Contacts	Without Contacts
9	DEMA-9PTI	DEMA-9PTI-FO	DEMAE-9PTI	DEMAE-9PTI-FO
15	DAMA-15PTI	DAMA-15PTI-FO	DAMAE-15PTI	DAMAE-15PTI-FO
25	DBMA-25PTI	DBMA-25PTI-FO	DBMAE-25PTI	DBMAE-25PTI-FO
37	DCMA-37PTI	DCMA-37PTI-FO	DCMAE-37PTI	DCMAE-37PTI-FO
50	DDMA-50PTI	DDMA-50PTI-FO	DDMAE-50PTI	DDMAE-50PTI-FO

D-Subminiature Metal Shell Crimp And Poke

Series 3 - High Reliability

Ordering Information Crimp and Poke - Sockets
Zinc-Plated Shell with Chromate Finish

	Yellow Chromate				RoHS Compliant with Clear Chromate	
	Mounting Holes		4-40 Clinch Nuts		Mounting Holes	4-40 Clinch Nuts
Positions	50µin. Gold Contacts	Without Contacts	50µin. Gold Contacts	Without Contacts	50µin. Gold	Without Contacts
9	DEMA-9S	DEMA-9S-FO	DEMAE-9S	DEMAE-9S-FO	DEMAH-9S	DEMAEH-9S-FO
15	DAMA-15S	DAMA-15S-FO	DAMAE-15S	DAMAE-15S-FO	DAMAH-15S	DAMAEH-15S-FO
25	DBMA-25S	DBMA-25S-FO	DBMAE-25S	DBMAE-25S-FO	DBMAH-25S	DBMAEH-25S-FO
37	DCMA-37S	DCMA-37S-FO	DCMAE-37S	DCMAE-37S-FO	DCMAH-37S	DCMAEH-37S-FO
50	DDMA-50S	DDMA-50S-FO	DDMAE-50S	DDMAE-50S-FO	DDMAH-50S	DDMAEH-50S-FO

Tin-Plated Shell

	Mounting Holes		4-40 Clinch Nuts	
Positions	50µin. Gold Contacts	Without Contacts	50µin. Gold Contacts	Without Contacts
9	DEMA-9ST	DEMA-9ST-FO	DEMAE-9ST	DEMAE-9ST-FO
15	DAMA-15ST	DAMA-15ST-FO	DAMAE-15ST	DAMAE-15ST-FO
25	DBMA-25ST	DBMA-25ST-FO	DBMAE-25ST	DBMAE-25ST-FO
37	DCMA-37ST	DCMA-37ST-FO	DCMAE-37ST	DCMAE-37ST-FO
50	DDMA-50ST	DDMA-50ST-FO	DDMAE-50ST	DDMAE-50ST-FO

Crimp and Poke Machined Contacts

- Will accommodate 20, 22, and 24 AWG wire.

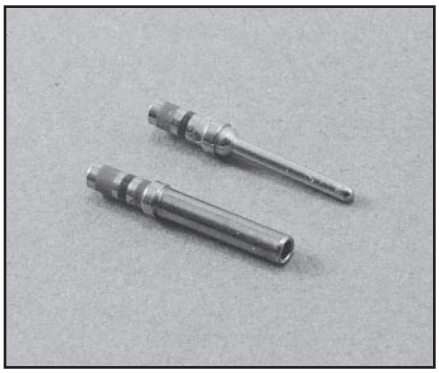

Ordering Information Contacts

Description	
Pin	M39029/64-369
Socket	M39029/63-368

D-Subminiature Metal Shell MIL-C-24308 M24308 Series

Features

- Meets all MIL-C-24308 Class G specifications.
- Offered in Crimp and Poke and Solder Cup and PCB vertical and right-angle.
- Offered in 9, 15, 25, 37, and 50 position plugs and sockets except right-angle (9 to 37 positions).
- Monoblock green diallyl phthalate insulator for improved electrical performance.
- See pages 4-6 for standard dimensions, contact arrangements, and panel mounting specifications.

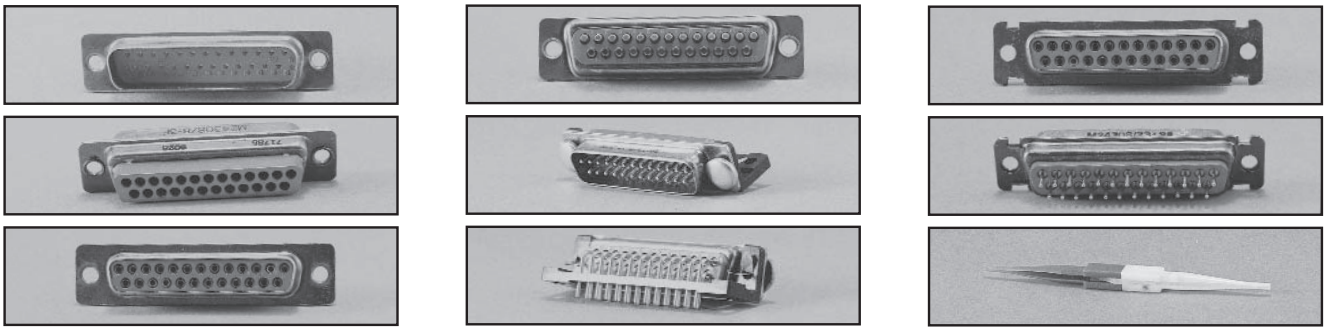

Material Specifications

Insulator Material	Glass-filled diallyl phthalate (green), per MIL-M-14, Type SDG-F
Connector Shell	Steel with cadmium plating and yellow chromate finish
Contact Material	Plug - Brass (machined), Socket - Phosphor bronze (machined)
Contact Plating	50µin gold over copper or nickel
4-40 Clinch Nut	Steel with cadmium plating and yellow chromate finish
Dual Float Bushing	Stainless Steel, passivated or non-magnetic brass

Environmental Specifications

Operating Temperature	-65°C to +125°C
Shock	50G peak per MIL-STD-202, Method 213, Condition G
Vibration	12 cycles in three perpendicular directions @ 10-2000Hz, per MIL-STD-202, Method 204, Condition D
Moisture Resistance	90-95% relative humidity @ 40ºC for 96 hours per MIL-STD-202, Method 103

Electrical Specifications

Withstanding Voltage	Minimum 1250V RMS @ sea level
Current Rating	5 Amps
Contact Resistance	2.7 milliohms maximum
Insulation Resistance	5000 megohms maximum (initial); 1000 megohms (minimum) after environmental testing

Mechanical Specifications

Individual Contact Insertion and Separation Force	0.7 oz. minimum/12oz. maximum
Durability	500 mating cycles

D-Subminiature Metal Shell MIL-C-24308

Crimp And Poke M24308 Series

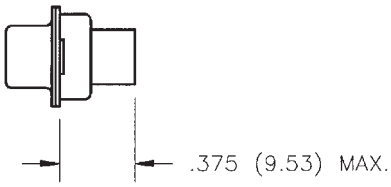

- Available with .120 mounting holes, float bushings, or dual float bushings.
- Order with contacts included or separately.
- Order with contact Insertion/Extraction Tool included or order tool #CIET-20-HD separately. See page 51.

Ordering Information Crimp and Poke Plugs
Steel Shell

Contacts Included. Insertion/Extraction Tool Not Included

Positions	Mounting Holes	Float Bushings	Dual Float Bushings
9	M24308/4-1F	M24308/4-302F	M24308/4-435F
15	M24308/4-2F	M24308/4-303F	M24308/4-436F
25	M24308/4-3F	M24308/4-304F	M24308/4-437F
37	M24308/4-4F	M24308/4-305F	M24308/4-438F
50	M24308/4-5F	M24308/4-306F	M24308/4-439F

Contacts Included. Insertion/Extraction Tool Included

Positions	Mounting Holes	Float Bushings	Dual Float Bushings
9	M24308/4-6F	M24308/4-313F	M24308/4-446F
15	M24308/4-7F	M24308/4-314F	M24308/4-447F
25	M24308/4-8F	M24308/4-315F	M24308/4-448F
37	M24308/4-9F	M24308/4-316F	M24308/4-449F
50	M24308/4-10F	M24308/4-317F	M24308/4-450F

Contacts Not Included. Insertion/Extraction Tool Not Included

Positions	Mounting Holes	Float Bushings	Dual Float Bushings
9	M24308/4-259F	M24308/4-324F	M24308/4-457F
15	M24308/4-260F	M24308/4-325F	M24308/4-458F
25	M24308/4-261F	M24308/4-326F	M24308/4-459F
37	M24308/4-262F	M24308/4-327F	M24308/4-460F
50	M24308/4-263F	M24308/4-328F	M24308/4-461F

D-Subminiature Metal Shell MIL-C-24308

Crimp And Poke M24308 Series

Ordering Information Crimp and Poke Sockets
Steel Shell

Contacts Included. Insertion/Extraction Tool Not Included.

Positions	Mounting Holes	Float Bushings	Dual Float Bushings
9	M24308/2-1F	M24308/2-23F	M24308/2-342F
15	M24308/2-2F	M24308/2-24F	M24308/2-343F
25	M24308/2-3F	M24308/2-25F	M24308/2-344F
37	M24308/2-4F	M24308/2-26F	M24308/2-345F
50	M24308/2-5F	M24308/2-27F	M24308/2-346F

Contacts Included. Insertion/Extraction Tool Included.

Positions	Mounting Holes	Float Bushings	Dual Float Bushings
9	M24308/2-6F	M24308/2-34F	M24308/2-353F
15	M24308/2-7F	M24308/2-35F	M24308/2-354F
25	M24308/2-8F	M24308/2-36F	M24308/2-355F
37	M24308/2-9F	M24308/2-37F	M24308/2-356F
50	M24308/2-10F	M24308/2-38F	M24308/2-357F

Contacts Not Included. Insertion/Extraction Tool Not Included.

Positions	Mounting Holes	Float Bushings	Dual Float Bushings
9	M24308/2-281F	M24308/2-292F	M24308/2-482F
15	M24308/2-282F	M24308/2-293F	M24308/2-483F
25	M24308/2-283F	M24308/2-294F	M24308/2-484F
37	M24308/2-284F	M24308/2-295F	M24308/2-485F
50	M24308/2-285F	M24308/2-296F	M24308/2-486F

D-Subminiature Metal Shell MIL-C-24308

Crimp And Poke M24308 Series

Ordering Information Tooling

- Contact Insertion/Extraction Tool: #CIET-20-HD (Military #M81969/39-01). See page 51.
- Wire termination hand tool: #M22520/2-01. See page 51.
- Positioner for machine contacts for hand tool #M22520/2-08 (locates contact in the correct position). See page 51.

Ordering Information Crimp and Poke Contacts

- Will accommodate 20, 22, and 24 AWG wire.

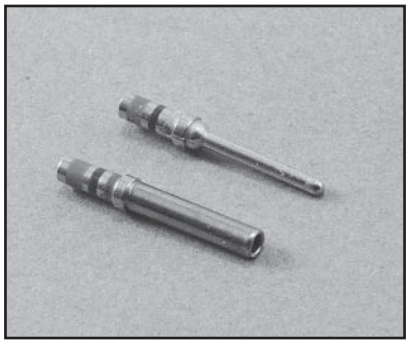

Description	
Pin	M39029/64-369
Socket	M39029/63-368

D-Subminiature Metal Shell MIL-C-24308

Solder Cup M24308 Series

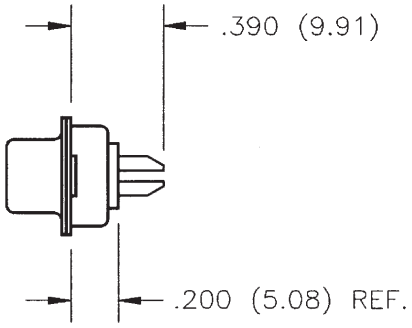

- Available with .120" mounting holes, float bushings, or dual float bushings.
- Will accommodate up to 20 AWG wire.

Ordering Information

Solder Cup Plugs - Steel Shell

Positions	Mounting Holes	Float Bushings	Dual Float Bushings
9	M24308/3-1F	M24308/2-12F	M24308/2-17F
15	M24308/3-2F	M24308/2-13F	M24308/2-18F
25	M24308/3-3F	M24308/2-14F	M24308/2-19F
37	M24308/3-4F	M24308/2-15F	M24308/2-20F
50	M24308/3-5F	M24308/2-16F	M24308/2-21F

Solder Cup Sockets - Steel Shell

Positions	Mounting Holes	Float Bushings	Dual Float Bushings
9	M24308/1-1F	M24308/1-12F	M24308/1-23F
15	M24308/1-2F	M24308/1-13F	M24308/1-24F
25	M24308/1-3F	M24308/1-14F	M24308/1-25F
37	M24308/1-4F	M24308/1-15F	M24308/1-26F
50	M24308/1-5F	M24308/1-16F	M24308/1-27F

D-Subminiature Metal Shell MIL-C-24308 PCB M24308 Series

Ordering Information

- .283" footprint requires minimal PCB space.
- Available with three contact tail lengths (.127" and .183") with .030" contact diameter.
- Offered with .120" mounting holes.
- Mounting bracket: Black nylon. Can be removed if necessary.

Right-Angle

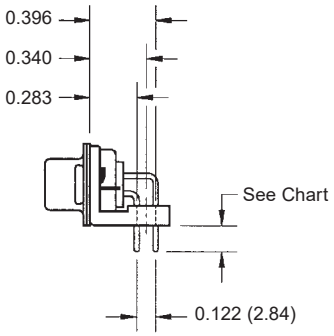

Ordering Information
Right-Angle PCB Plugs (Sockets not available)
Steel Shell

Positions	.127 Tail Length .030 Contact Diameter	.183 Tail Length .030 Contact Diameter
9	M24308/24-25F	M24308/24-49F
15	M24308/24-26F	M24308/24-50F
25	M24308/24-27F	M24308/24-51F
37	M24308/24-28F	M24308/24-52F

Vertical Connector

- Available with two contact tail lengths (.158" and .183") with contact diameter .030".
- Offered with .120" mounting holes.

Vertical

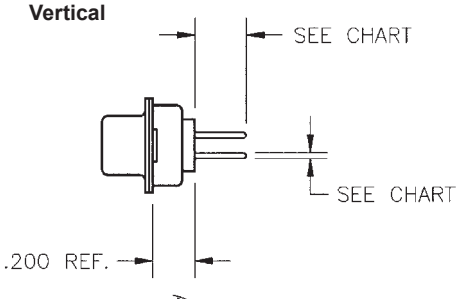

Ordering Information
Vertical PCB Plugs Steel Shell

Positions	.158 Tail Length .030 Contact Diameter	.183 Tail Length .030 Contact Diameter
9	M24308/24-1F	M24308/24-7F
15	M24308/24-2F	M24308/24-8F
25	M24308/24-3F	M24308/24-9F
37	M24308/24-4F	M24308/24-10F
50	M24308/24-5F	M24308/24-11F

Vertical PCB Sockets Steel Shell

Positions	.158 Tail Length .030 Contact Diameter	.183 Tail Length .030 Contact Diameter
9	M24308/23-1F	M24308/23-7F
15	M24308/23-2F	M24308/23-8F
25	M24308/23-3F	M24308/23-9F
37	M24308/23-4F	M24308/23-10F
50	M24308/23-5F	M24308/23-11F

D-Subminiature Backshells / Junction Shells / Hoods Accessories

Features

Cinch backshells are offered in a variety of styles, each having a specific strength.

- Backshells have two-piece construction and are frequently used where appearance is a major factor. RFI/EMI shielding capability is also an option:
  - Plastic Backshells: No shielding.
  - Metallized Plastic: Economical method of shielding.
  - Diecast Backshells: Maximum shielding.
- Cinch SDH Series backshells utilize Cinch's Latch-N-Lock™ system with quick release disconnect. Just squeeze the latch levers to release the connector. Also available with standard 4-40 mounting hardware.
- Junction Shells come in a variety of sizes and shapes including right-angle and low profile. They are generally of one-piece construction with an adjustable clamp, but there is no shielding.
- Hoods have an improved appearance versus junction shells but no shielding. They are all-plastic and come in right-angle or straight configurations.
- Hardware, in the form of adjustable grommets or strain relief clamps and 4-40 screws, is generally supplied with the product; however, a variety of optional hardware is also available in the accessories section of this catalog.

D-Subminiature Backshells - Two-Piece D*H Series

Features

- Standard two-piece construction available in plastic, metallized plastic, or diecast zinc versions with 180° straight cable entry.
- Fits standard metal shell D-subminiature plugs and sockets as well as HTD Series 1.5 D-subs.
- Ethernet hoods are available in diecast 15 position versions only with both 90° and 180° cable entry.
- Included in all backshells:
- Hardware: 4-40 screws, hex nuts, 4-40 screw mounting bracket.
- Grommets: To accommodate most cable sizes. Grommets also function as strain reliefs.
- Backshells are individually bagged.
- Note that slide locks may not be used with these backshells.
- Optional thumbscrew for backshell must be ordered separately if required.

Material Specifications

4-40 screws, hex nuts, mounting bracket	Steel with zinc plating and clear chromate coating
Standard Backshells	Plastic Backshells: ABS (black), hardware - steel with zinc plating, grommets - polyphenylene, (black). Metallized Plastic Backshells: ABS with nickel over copper plating, hardware - steel with zinc plating, grommets - PVC (black). Diecast Backshells: Diecast zinc, grommets - PVC (black).
Ethernet Backshells	Diecast zinc, grommets - PVC (black)

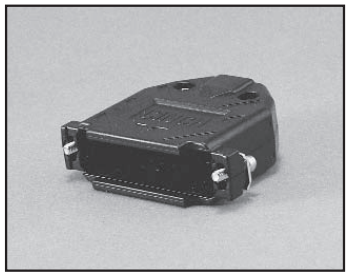
Plastic

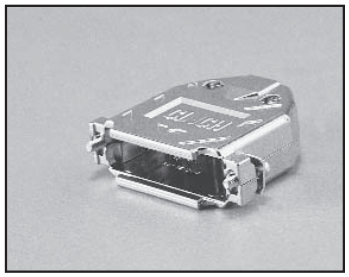
Metallized

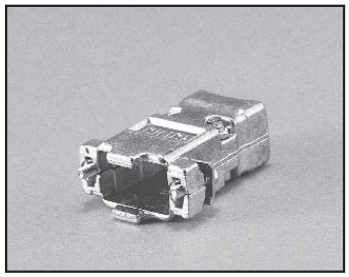
Diecast

D-Subminiature Backshells - Two-Piece D*H Series

Straight (180°) Standard Backshells
Plastic and Metallized Plastic Backshells

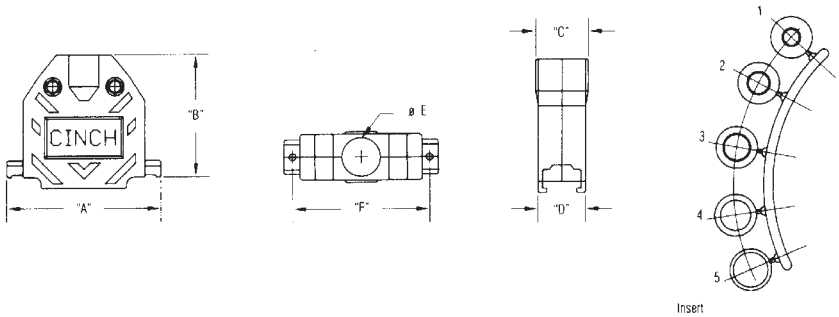

Dimensions

	A		B		C		D		E		F	
Shell Size	**in**	**mm**	**in**	**mm**	**in**	**mm**	**in**	**mm**	**in**	**mm**	**in**	**mm**
E	1.225	31.12	1.547	39.29	0.640	16.26	0.645	16.38	0.400	10.16	0.984	24.99
A	1.540	39.12	1.516	38.51	0.640	16.26	0.645	16.38	0.400	10.16	1.312	33.32
B	2.090	53.09	1.655	42.04	0.710	18.03	0.645	16.38	0.522	13.26	1.857	47.17
C	2.730	69.34	1.830	46.48	0.906	23.01	0.645	16.38	0.725	18.42	2.500	63.50
D	2.645	67.18	1.855	41.12	0.940	23.88	0.750	19.05	0.725	18.42	2.406	61.11

D-Subminiature Backshells - Two-Piece D*H Series

EMI/RFI Shielded Diecast Backshells

9 and 15 Position

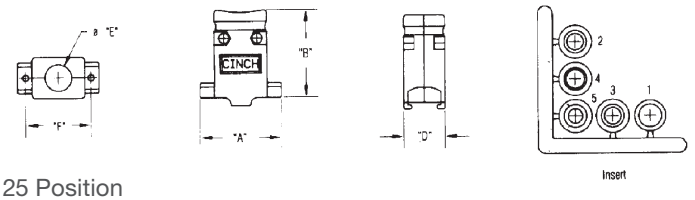

25 Position

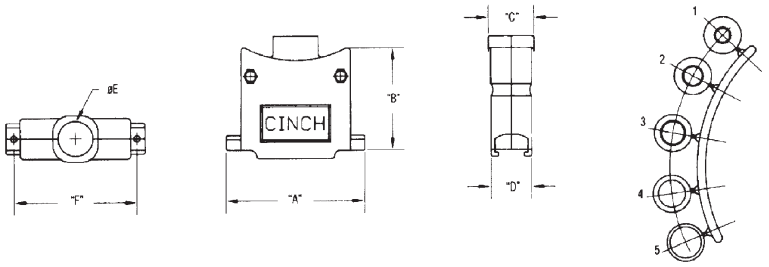

37 and 50 Position

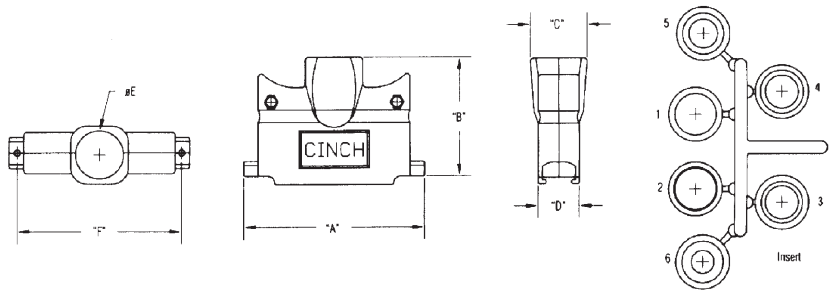

Dimensions

Shell Size	A		B		C		D		E		F	
	in	mm	in	mm	in	mm	in	mm	in	mm	in	mm
E	1.225	31.12	1.465	37.21	0.620	15.75	0.620	15.75	0.400	10.16	0.984	24.99
A	1.540	39.12	1.600	40.64	0.620	15.75	0.620	15.75	0.400	10.16	1.312	33.32
B	2.090	53.09	1.570	39.88	0.690	17.53	0.620	15.75	0.525	13.34	1.857	47.17
C	2.730	69.34	1.810	45.97	0.862	21.89	0.620	15.75	0.725	18.42	2.500	63.50
D	2.624	66.65	1.800	45.72	0.862	21.89	0.730	18.54	0.725	18.42	2.406	61.11

Ordering Information

D*H Two-Piece Backshells

Shell Size	Fits Standard Density	Cable Entry Style	RoHS Compliant Plastic	Cable Dia. (in)	RoHS Compliant Metallized Plastic	Cable Dia. (in)	Diecast Metal	Cable Dia. (in)
E	9	Straight (180°)	DPH-E-003	.210-.320	DCH-E-003	.210-.350	DMH-E-003	.210-.320
A	15	Straight (180°)		.210-.320	DCH-A-003	.210-.350	DMH-A-003	.210-.320
B	25	Straight (180°)	DPH-B-003	.230-.450	DCH-B-003	.230-.450		.230-.450
C	37	Straight (180°)		.350-.650	DCH-C-003	.350-.640		.350-.650

D-Subminiature Backshells - Super D SDH Series

Features

- The Cinch Super D Interconnection System is a simple, fast, economical, and reliable way for mating connectors from cable to cable or cable to panel.
- Snap-on Super D plastic hoods captivate connectors providing positive, self-latching, audible mating with reliable retention and Latch-N-Lock quick release disconnect.
- Snap-on Super-D plastic hoods are also available with filler ends to utilize 4-40 mounting hardware.
- Super D hoods are available:
  - Straight (180°) or Right-Angle (90°) cable entry.
  - Sizes: 9, 15, 25, and 37.
  - Sizes 15, 25, and 37 are available in standard or large cable openings.
- Black SDH backshells accommodate any standard metal shell IDC, solder cup, or crimp and poke D-subminiature connector.
- Gray SDH backshells accommodate the Cinch All-Plastic IDC T-Series connector on page 15.
- Each Super-D plastic hood includes a stay band to strain relief the cable wire. Stay band tool SD-MSBT is required.

Material Specifications

Hood	Modified phenylene oxide - black for metal shell connectors or gray for all-plastic IDC connectors
Latch Block	Diecast zinc
Screws for Latching Blocks	Steel with nickel plating
Stay Band	Steel with zinc plating and clear chromate finish

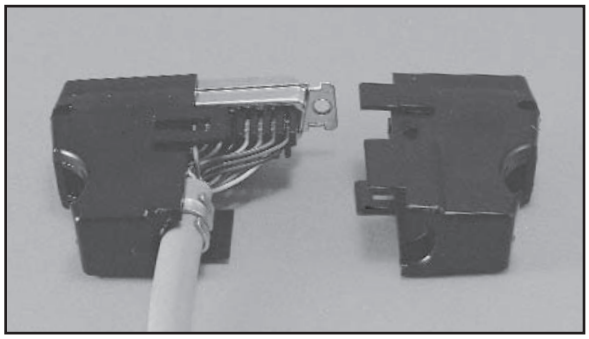

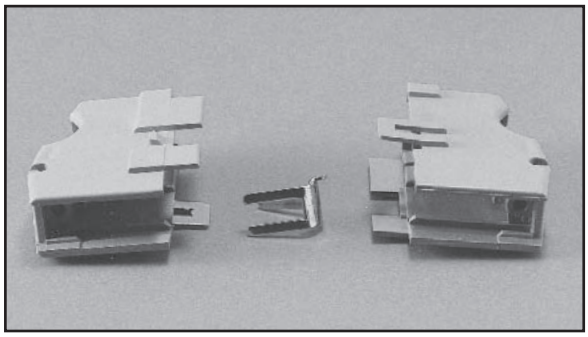

D-Subminiature Backshells - For Use With Metal Shell Connectors SDH Series

Straight (180°) Cable Entry Black Backshells for Metal Shell Connectors

Adapter Hood with Filler Ends

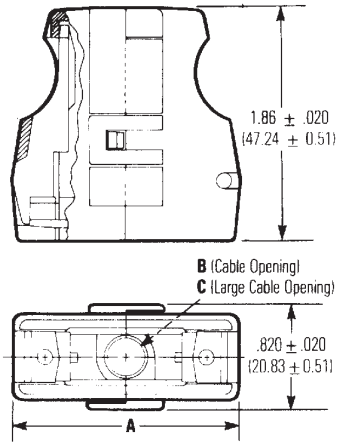

Adapter Hood with Latches

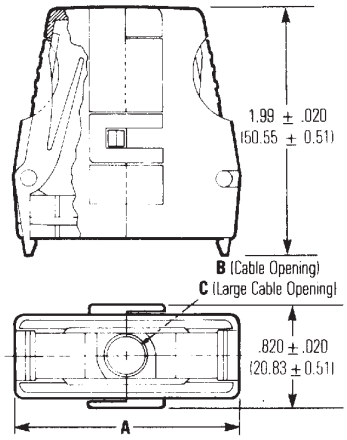

Right-Angle (90°) Cable Entry Black Backshells for Metal Shell Connectors

Right-Angle Adapter Hood

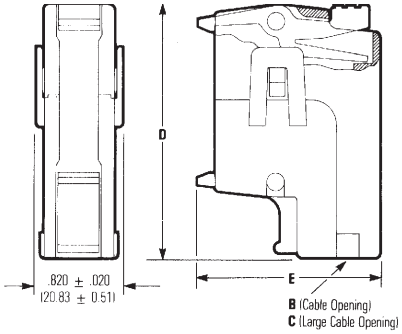

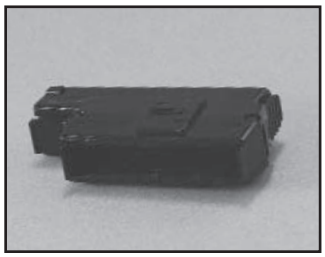

Dimensions

	A ± .020" (.58mm)		B ± .020" (.58mm)		C ± .020" (.58mm)		D ± .020" (.58mm)		E ± .020" (.58mm)	
Positions	**in**	**mm**	**in**	**mm**	**in**	**mm**	**in**	**mm**	**in**	**mm**
9	1.47	37.34	.31	7.87	-	-	1.94	49.21	1.25	31.75
15	1.80	45.72	.31	7.87	.41	10.41	2.25	57.15	1.34	34.13
25	2.35	59.69	.33	8.40	.47	11.94	2.94	74.61	1.50	38.10
37	2.99	75.95	.37	9.40	.50	12.70	3.59	91.28	1.53	38.89

D-Subminiature Backshells - For Use With Metal Shell Connectors SDH Series

Ordering Information

Straight (180°) Cable Entry Black Backshells for Metal Shell Connectors

Positions	(RoHS) Latches Standard Cable Opening
9	SDHH-9BL
15	SDHH-15BL
25	SDHH-25BL

Latching Blocks for Super D Adapter System

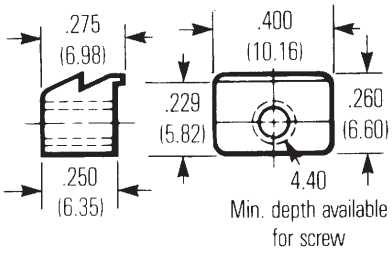

Ordering Information

Description	For Panel Thickness	Qty per pack	Qty Required Per SDH Hood	Catalog Number
Latching Block	N/A	1 each	2 each	SD-LB
Latching Block with SEM Screws	Up to .060"	2 each	2 each	SD-LB-060
Removable Mounting Screws for Adapter Hood	N/A	1 each	2 each	4-40UNC2AX3/4
Latching Block with SEM Screws	.060" to .080"	2 each	2 each	SD-LB-060-080
Latching Block with SEM Screws	.080" to .125"	2 each	2 each	SD-LB-125

D-Subminiature Backshells - Gray With All-Plastic Connectors SDH Series

Fits only T Series All-Plastic IDC connector on page 14.

Straight (180°) Cable Entry Gray Backshells for All-Plastic Connectors

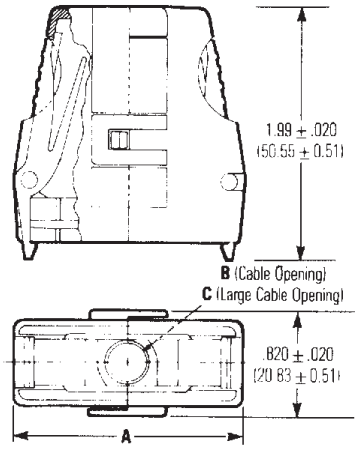

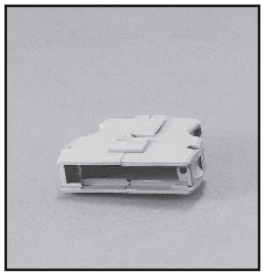

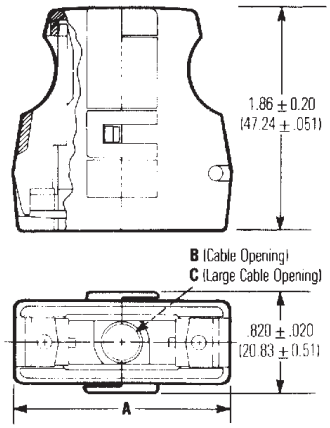

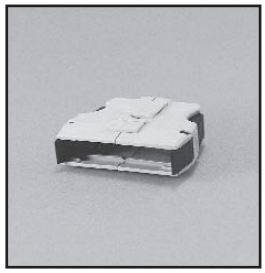

Dimensions

	A ± .020" (.58mm)		B ± .020" (.58mm)		C ± .020" (.58mm)	
Positions	**in**	**mm**	**in**	**mm**	**in**	**mm**
9	1.47	37.34	.31	7.87	-	-
15	1.80	45.72	.31	7.87	.41	10.41
25	2.35	59.69	.33	8.40	.47	11.94
37	2.99	75.95	.37	9.40	.50	12.70

Ordering Information

Straight (180°) Cable Entry Gray Backshells for All-Plastic Connectors

	Latches	Filler Ends	Filler Ends w/4-40 Screws
Positions	**Standard Cable Opening**	**Standard Cable Opening**	**Large Cable Opening**
9	SDH-9GL	SDH-9GF	N/A
15	SDH-15GL	SDH-15GF	SDH-15GFLCS
25	SDH-25GL	SDH-25GF	SDH-25GFLCS
37	SDH-37GL	SDH-37GF	SDH-37GFLCS

D-Subminiature Backshells - Gray Use With All-Plastic Connectors SDH Series

Right-Angle (90°) Cable Entry Gray Backshells for All-Plastic Connectors

Fits only IDC connector on pages 14-39.

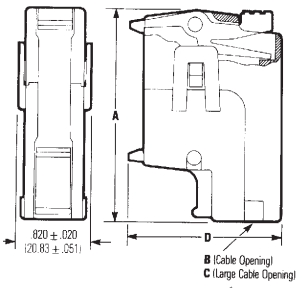

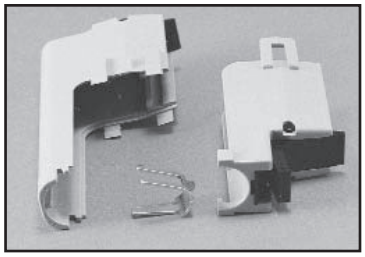

Dimensions

Positions	A ± .020" (.58mm)		B ± .020" (.58mm)		C ± .020" (.58mm)		D ± .020" (.58mm)	
	in	mm	in	mm	in	mm	in	mm
9	1.94	49.21	.31	7.87	-	-	1.25	31.75
15	2.25	57.15	.31	7.87	.41	10.41	1.34	34.13
25	2.94	74.61	.33	8.40	.47	11.94	1.50	38.10
37	3.59	91.28	.37	9.40	.50	12.70	1.53	38.89

Ordering Information
Right Angle (90°) Cable Entry Gray Backshells for All-Plastic Connectors

Positions	Latches Standard Cable Opening
9	SDH-9RGL
15	SDH-15RGL
25	SDH-25RGL
37	SDH-37RGL

Ordering Information
Accessories for Gray Backshells

Positions	Optional Strain Reliefs*	Additional Stay Bands**
9	SD-WC9	SD-9-15-SB
15	SD-WC15	SD-9-15-SB
25	SD-WC25	SD-25-37-SB
37	SD-WC37	SD-25-37-SB

* Two each required per backshell.

** Stay band tool #SD-MSBT required.

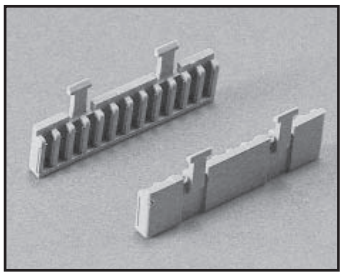

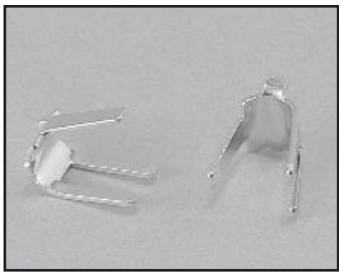

Screw for screwlocking connector assembly -(2 each required): 4-40UNC2ZX3/4.

D-Subminiature Junction Shells

Material Specifications

Shell Material	Zinc-plated low carbon steel with yellow chromate finish or clear chromate finish
Clamp	Zinc-plated steel with yellow chromate finish
Screw	Zinc-plated steel with yellow chromate finish
Stop Nut	Zinc-plated brass with yellow chromate finish

Round Clamp

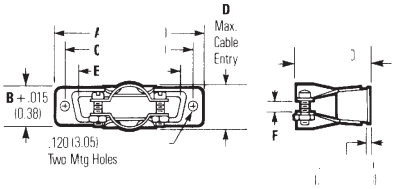

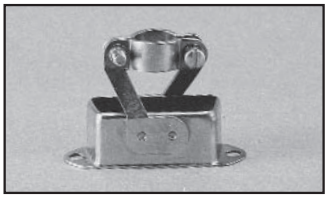

Shell Size	Positions	A		B		C		D		E		F		G	
		in	mm	in	mm	in	mm	in	mm	in	mm	in	mm	in	mm
A	15	1.531	38.89	.500	12.70	1.312	33.32	.406	10.31	.984	23.72	.125	3.18	1.031	26.19
B	25	2.078	52.78	.500	12.70	1.852	47.04	.593	15.06	1.515	38.48	.187	4.75	1.062	26.97

Right-Angle Clamp

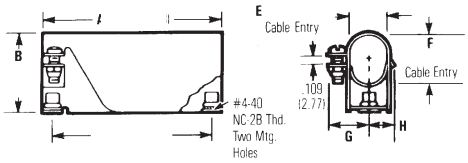

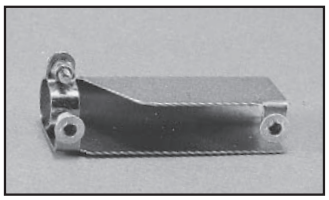

Shell Size	Positions	A		B		C		E		F		G		H	
		in	mm	in	mm	in	mm	in	mm	in	mm	in	mm	in	mm
E	9	1.203	30.56	0.718	18.24	.984	24.99	.437	11.10	.437	11.10	.468	11.89	.281	7.14
A	15	1.531	38.89	0.718	18.24	1.312	33.32	.437	11.10	.437	11.10	.468	11.89	.281	7.14
B	25	2.078	52.78	0.968	24.59	1.852	47.04	.437	11.10	.625	15.88	.468	11.89	.281	7.14
C	37	2.718	69.04	1.187	30.15	2.500	63.50	.437	11.10	.812	20.62	.468	11.89	.281	7.14
D	50	2.625	66.68	1.250	31.75	2.406	61.11	.562	14.27	.906	23.01	.531	13.49	.343	8.71

D-Subminiature Junction Shells

Deep Straight Clamp

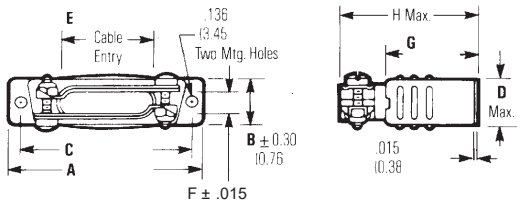

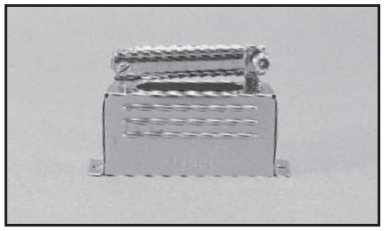

Shell Size	Positions	A		B		C		D		E		F		G		H	
		in	mm	in	mm	in	mm	in	mm	in	mm	in	mm	in	mm	in	mm
E	9	1.203	30.56	.484	12.29	.984	24.99	.578	14.68	.375	9.53	.375	9.53	.750	19.05	1.219	30.96
A	15	1.531	38.89	.484	12.29	1.312	33.32	.578	14.68	.713	18.11	.312	7.92	.750	19.05	1.250	31.75
B	25	2.078	52.78	.484	12.29	1.852	47.04	.578	14.68	1.000	25.40	.312	7.92	1.000	25.40	1.531	38.89
C	37	2.718	69.04	.484	12.29	2.500	63.50	.578	14.68	1.375	34.93	.312	7.92	1.000	25.40	1.531	38.89
D	50	2.625	66.68	.593	15.06	2.406	61.11	.687	17.45	1.406	35.71	.406	10.31	1.125	28.58	1.656	42.06

Switching Shell

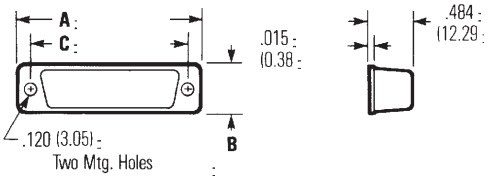

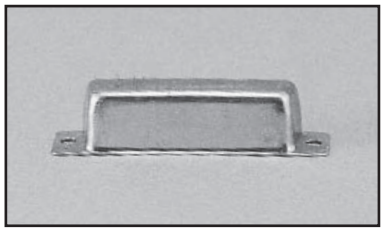

Shell Size	Positions	A		B		C	
		in	mm	in	mm	in	mm
A	15	1.531	38.89	.500	12.70	1.312	33.32
B	25	2.078	52.78	.500	12.70	1.852	47.04
C	37	2.718	69.04	.500	12.70	2.500	63.50
D	50	2.625	66.68	.609	15.47	2.406	61.11

Ordering Information
Junction Shells - Metal

Shell Size	Fits Standard Density	Yellow Chromate				RoHS Clear Chromate	
		Round Clamp	Right-Angle Clamp	Deep Straight Clamp	Switching Shell	Right-Angle Clamp	Deep Straight Clamp
E	9	N/A	DE-19977-5	DE-24857	N/A	DE-19977-30	DE-24657-30
A	15	DA-20961	DA-19977-1	DA-24658	DA-19678-6	DA-19977-31	DA-24658-31
B	25	DB-20962	DB-19977-2	DB-24659	DB-19678-7	DB-19977-32	DB-24659-32
C	37	N/A	DC-19977-3	DC-24660			DC-24660-33
D	50	N/A	DD-19977-4				

D-Subminiature Plastic Hoods

All-Plastic Straight (180°) Hood

Shell Material: Nylon (gray).
#4-40 Screws: Steel with nickel plating.

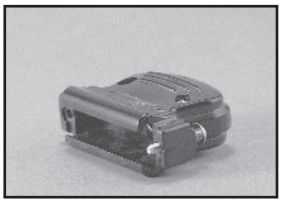

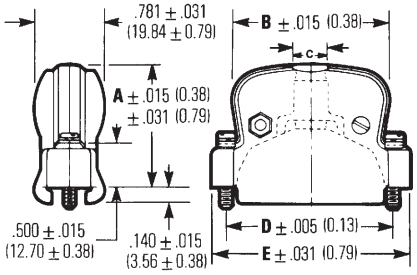

		A		B		C		D		E		F		G	
Shell Size	Positions	in	mm	in	mm	in	mm	in	mm	in	mm	in	mm	in	mm
E	9	1.218	30.94	1.000	25.40	.984	23.72	.500	12.70	.562	14.27	.281	7.14	.218	7.14
A	15	1.546	38.27	1.000	25.40	1.312	33.32	.500	12.70	.562	14.27	.360	9.14	.360	9.14
B	25	2.093	53.16	1.250	31.75	1.852	47.04	.500	12.70	.562	14.27	.493	12.52	.360	9.14

Ordering Information
Plastic Hoods

Shell Size	Standard Density	Straight Hood
E	9	DE-51218-1
A	15	DA-51210-1
B	25	
C	37	N/A
D	50	N/A
A	15	

D-Subminiature Accessories

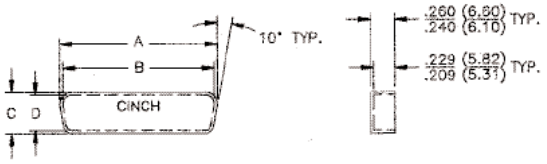

Dust Caps

- For use with all Cinch D-subminiature connectors.
- Used to protect connector contacts when connector is not mated.
- Made of polyethylene (black).

Ordering Information

Fits Shell Size	Fits Standard Density	Catalog No.	Description	A		B		C		D	
				in	mm	in	mm	in	mm	in	mm
E	9	DE-59-20	Socket	.694	17.63	.627	15.93	.362	9.19	.295	7.49
E	9	DE-60-20	Plug	.749	19.02	.682	17.32	.412	10.46	.345	8.76
A	15	DA-59-20	Socket	1.022	25.95	.955	24.25	.362	9.19	.295	7.49
A	15	DA-60-60	Plug	1.077	27.36	1.010	25.65	.412	10.46	.345	8.76
B	25	DB-59-20	Socket	1.562	39.67	1.495	37.97	.362	9.19	.295	7.49
B	25	DB-60-20	Plug	1.635	41.52	1.568	39.83	.430	10.92	.365	9.22
C	37	DC-59-20	Socket	2.210	56.13	2.143	54.43	.362	9.19	.295	7.49
C	37	DC-60-20	Plug	2.283	57.99	2.216	56.29	.430	10.92	.363	9.22
D	50	DD-59-20	Socket	2.116	53.75	2.049	52.04	.474	12.04	.407	10.34
D	50	DD-60-20	Plug	2.179	55.35	2.112	53.64	.536	13.61	.469	11.91

D-Subminiature Accessories

Slide Lock Assemblies

- A slide lock assembly is a metal bracket offered with hardware necessary to mount into the standard connector mounting holes. It consists of the lock retainer plate, two screws, two washers, and two nuts. Two lock posts are required to fit into the mounting holes of the mating connector. These must be ordered separately.
- Compatible with all Cinch Backshells, Hoods, and Junction Shells except D*H Series, SDH Series, and phenolic hood.
- Compatible with all Cinch metal shell D-subminiature connectors.

Material Specifications

Slide Lock Plate	Stainless steel, passivated.
Slide Lock Hex Nut, Washer #4-40 Screw	Steel with zinc plating and yellow chromate finish
Lockpost, Washer, Lockwasher, and Hex Nut	Steel with zinc plating and yellow chromate finish

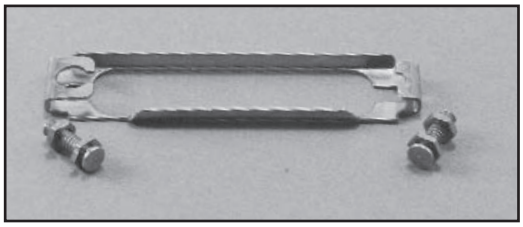

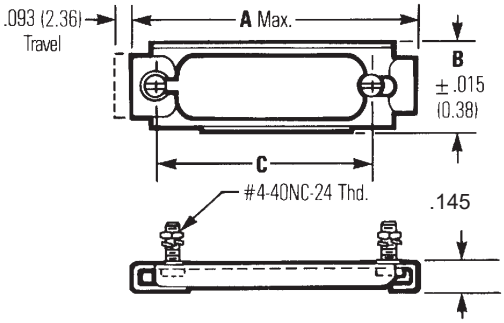

Consists of Lock Retainer and two lock posts (order separately).
NOTE: Not compatible with D*H Series or SDH Series backshells.

Ordering Information

Fits Shell Size	Fits Standard Density	Lock Retainer	A		B		C	
			in	mm	in	mm	in	mm
E	9	DE-51224-1	1.442	36.63	.500	12.70	0.984	24.99
A	15	DA-51220-1	1.770	44.96	.500	12.70	1.312	33.27
B	25	DB-51221-1	2.293	58.24	.500	12.70	1.852	47.04
C	37	DC-51222-1	2.958	75.13	.500	12.70	2.500	63.50
D	50	DD-51223-1	2.847	72.31	.609	15.47	2.406	62.48

Lock Post: #D53018. Two (2) required with each Slide Lock Assembly.

D-Subminiature Hardware Accessories

Screwlocks

- Screwlocks are designed to retain the same size mated connectors together or to secure the connector to a rack/panel. Screwlocks may be used on plugs or sockets.
- Female screwlocks consist of one #4-40 screw with a #4-40 hole in the top, two flat washers to accommodate different panel thicknesses, one lockwasher, and one #4-40 nut. Military female screwlocks include three flat washers.
- Male screwlocks consist of one #4-40 slotted screw and a spring tension clip. Different sizes accommodate the various connector flange sizes and types of backshells or hoods (if applicable).
- Two screwlocks are required per connector.
- Military screwlocks meet all requirements of MIL-C-24308.

Material Specifications
Commercial Screwlock Assemblies

Male Screwlock Assembly	Clip and screw are steel with zinc plating and yellow chromate finish – RoHS has clear chromate finish
Female Screwlock Assembly	Washers (2), lockwashers, hex nuts, and nuts are steel with zinc plating and yellow chromate finish - RoHS has clear chromate finish

M24308 Military Screwlock Assemblies

Male Screwlock Assembly	Clip and screw are steel with cadmium plating and yellow chromate finish
Female Screwlock Assembly	Washers (3), lockwashers, hex nuts, and nuts are steel with cadmium plating and yellow chromate finish

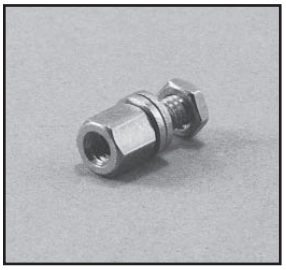
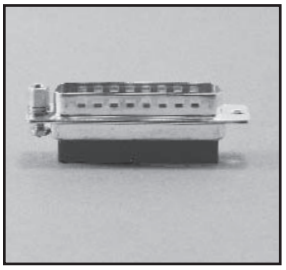

Female Screwlock

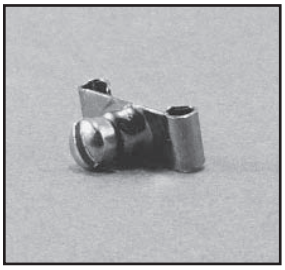
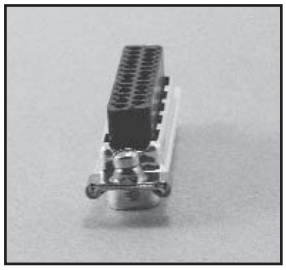

Male Screwlock

D-Subminiature Accessories

Screwlock assemblies will not fit D*H or SDH Series backshells.

Male Screwlocks

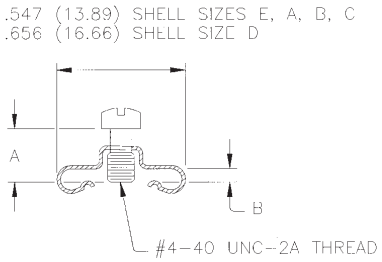

Female Screwlocks

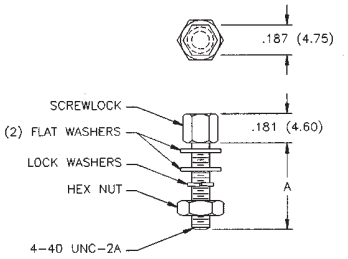

Ordering Information - Male Screwlocks

Shell Size Positions	A		B		E	A	B	C	D	RoHS
					9	15	25	37	50	
	in	mm	in	mm						
Commercial:										
D20419-46	0.250	6.35	0.048	1.22	S*	S*	P/S*	P/S*		X
D20419-40	0.250	6.35	0.033	0.84	P/S	P/S	S	S		X
D20419-0	0.250	6.35	0.033	0.84	P/S	P/S	S	S		
D20419-16	0.250	6.35	0.048	1.22	S*	S*	P/S*	P/S*		
D20419-21	0.281	7.14	0.059	1.50		P*	P*			
D20420-0	0.250	6.35	0.033	0.84					S	
D20420-12	0.281	7.14	0.048	1.22					P/S*	
D20420-42	0.281	7.14	0.048	1.22					P/S*	X
Military MIL-C-24308										
M24308/25-9F	Per MIL spec				P/S	P/S	P/S	P/S		
M24308/25-10F	Per MIL spec								P/S	

NOTE: P=Plug, S=Socket
* Indicates use with junction shell

Ordering Information - Female Screwlocks

Shell Size Positions	A		E	A	B	C	D	RoHS
			9	15	25	37	50	
	in	mm						
Commercial:								
D20418-42	0.312	7.92	P/S	P/S	P/S	P/S	P/S	X
D20418-39	0.628	15.95	P/S	P/S	P/S	P/S	P/S	X
Military MIL-C-24308								
M24308/26-1F	Per MIL spec		P/S	P/S	P/S	P/S	P/S	
M24308/26-2F	Per MIL spec		P/S	P/S	P/S	P/S	P/S	

NOTE: P=Plug, S=Socket

D-Subminiature IDC Termination Tools

Super D™ Manual Stay Band Tool

Designed for applying the steel stay band/strain relief to the cable before termination of wires to the connector, the manual Stay Band Tool applies both stay band sizes to the full range of cable sizes.
Part No. SD-MSBT

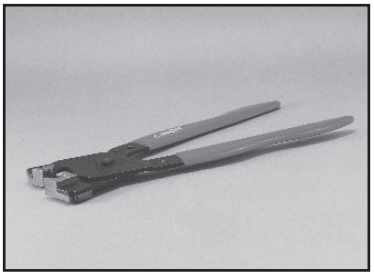

Manual Tool

Uni-Clinch™ D Single-Wire Hand Insertion Tool

Designed to insert one 22-26 AWG wire at a time, Uni-Cinch D is used as a field repair tool by field service engineers.
Part No.: SD-UC

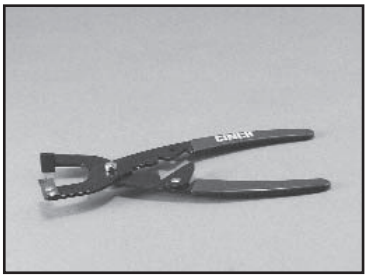

Uni-Clinch Hand Insertion Tool

NOTE: All termination tools on this page are used in conjunction with T* Series D-subminiature connectors.

D-Subminiature Crimp and Poke Termination Tools

Metal Shell High-Reliability Crimp and Poke Termination Tool

Hand crimping tool for high-reliability machined D*U, Series 3, and M24308 Crimp and Poke contacts.
M22520/2-01
NOTE: Positioner required with crimping tool

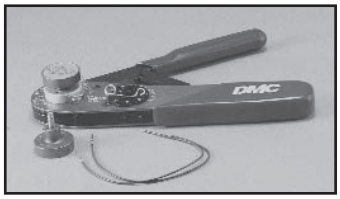

M22520/2-01

Positioner --

A device when attached to a crimping tool that locates the contact in the correct position.
Positioner for machined contacts
D*U Series Positioner
Part No.: 599-11-11-580
Catalog No.: EP-580
Series 3 and M24308 Connector Positioner
Part No.: 598-98-97-618
Catalog No.: M22520/2-08

Metal Shell Military Crimp and Poke Insertion/Extraction Tool

For inserting or extracting machined D*U, Series 3, or M24308 Crimp and Poke contacts.
Part No.: CIET-20-HD

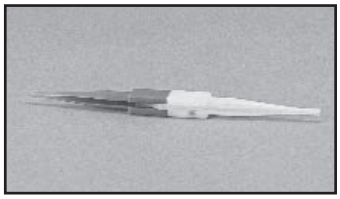

CIET-20-HD

Military Extraction Tip Only

For extracting high-reliability machined D*U, Series 3, or M24308 Crimp and Poke contacts.
Part No.: CET-20-11

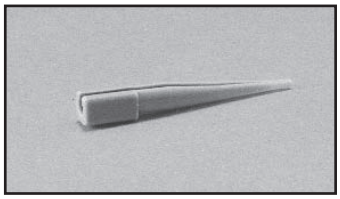

CET-20-11

About Cinch Connectivity Solutions

In operation since 1917, Cinch supplies high quality, high performance connectors and cables globally to the Aerospace, Military/Defense, Commercial Transportation, Oil & Gas, High End Computer, and other markets. We provide custom solutions with our creative, hands on engineering and end to end approach.

Our diverse product offerings include: connectors, enclosures and cable assemblies utilizing multiple contact technologies including copper and fiber optics. Our product engineering and development activities employ cutting edge technologies for design and modeling, and our various technologies and expertise enable us to deliver custom solutions and products for our strategic partnerships.

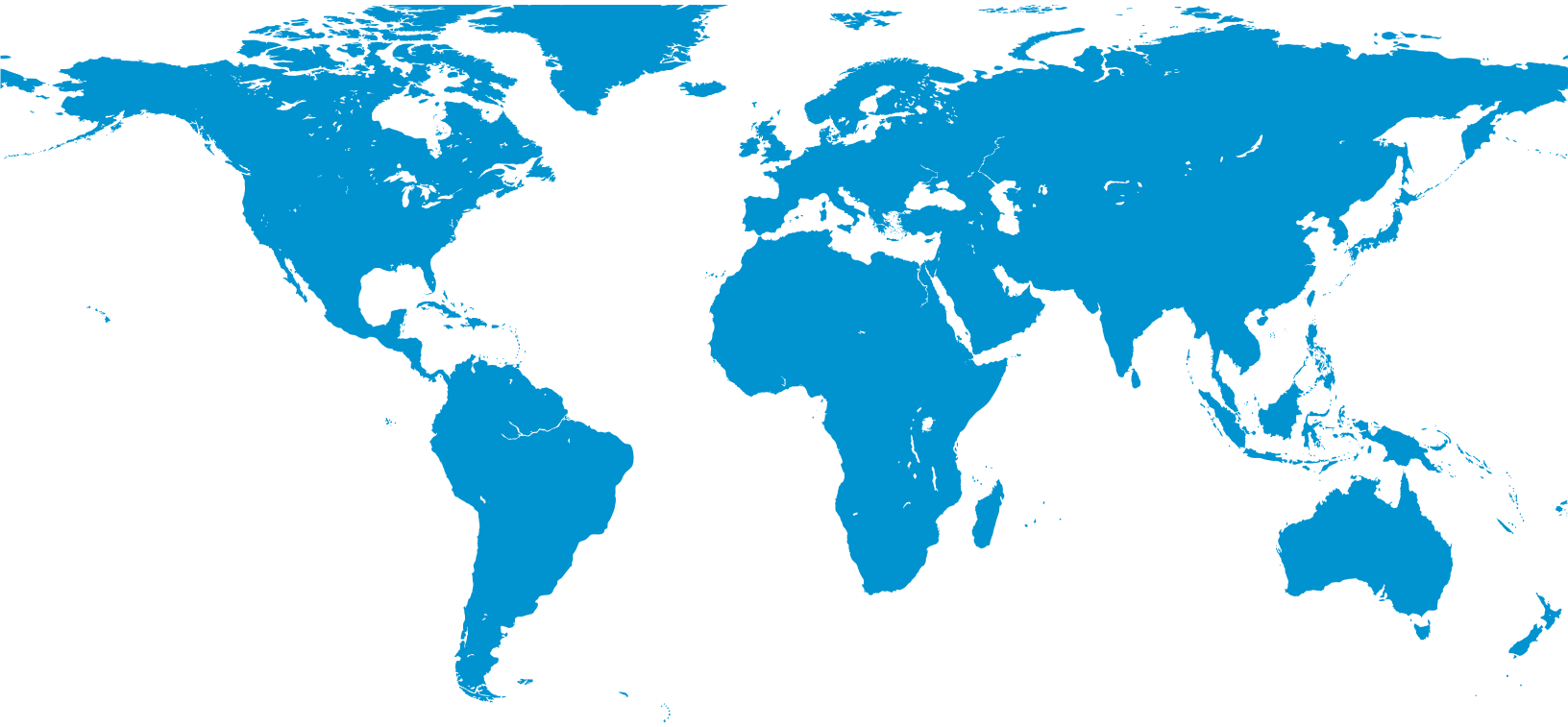

For more information, please contact us:

North America
+1 507.833.8822
ccsorders@us.cinch.com

Asia-Pacific
+86 21 5442 7668
ccs.asia.sales@as.cinch.com

Europe, Middle East
+44 (0) 1245 342060
CinchConnectivity@eu.cinch.com

belfuse.com/cinch

cinch
CONNECTIVITY SOLUTIONS
a bel group

ca-ccs-industrial-d-sub-catalog-v9 06092021

© 2021 Cinch Connectivity Solutions