D2QW

Sealed Subminiature Basic Switch

Sealed long stroke slide-contact switch for reliable ON/OFF action even in severe environmental conditions.

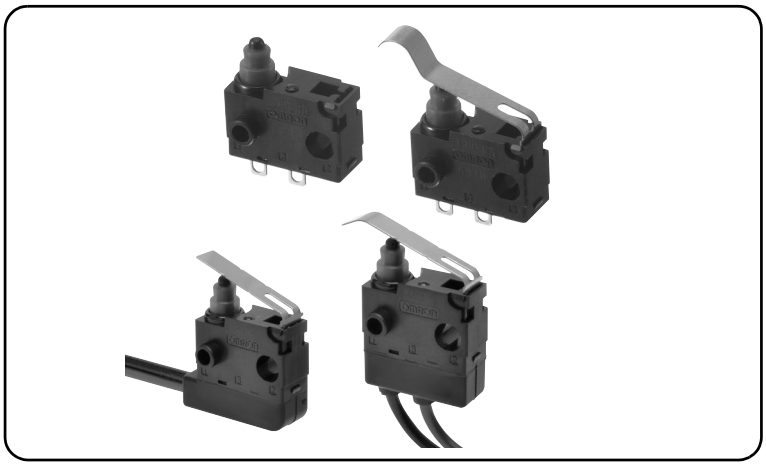

- **Extra-long stroke even without levers. (OT: 2.7 mm)**
- **Clip contacts with highly reliable slide contact mechanism.**
- **High temperature resistance up to 85°C and drip-proof structure for wide range of applications environmental resistance required. (Conforms to IP67, except for terminal section.)**
- **Models available with highly reliable gold-plated contacts.**

RoHS Compliant

D2QW

Model Number Legend

D2QW-□□□□□-□-□

1 2 3 4 5 6 7

1. Cover
C: M3-screw Mounting

2. Ratings
0: Gold-plated contacts
5 VDC 1 mA~30 VDC 0.1 A
1: Silver-plated contacts
5 VDC 1 mA~30 VDC 0.1 A

3. Actuator
0: Pin plunger
6: Leaf lever
7: Simulated roller leaf lever
8: Bent leaf lever

4. Contact form
2: SPST-NC
3: SPST-NO

5. Terminals
D : PCB terminals
H : Solder terminals
M : Molded lead wires downwards
ML : Molded lead wires on left-side
MR : Molded lead wires on right-side

6. Special Specification

7. Special Industry Specification

List of Models

Actuator	Terminals	Contact / Contact form	Gold plated	Silver plated
			Model	
Pin plunger	PCB	SPST-NO	**D2QW-C003D**	**D2QW-C103D**
		SPST-NC	**D2QW-C002D**	**D2QW-C102D**
	Solder	SPST-NO	**D2QW-C003H**	**D2QW-C103H**
		SPST-NC	**D2QW-C002H**	**D2QW-C102H**
	Molded lead wires downwards	SPST-NO	**D2QW-C003M**	**D2QW-C103M**
		SPST-NC	**D2QW-C002M**	**D2QW-C102M**
	Molded lead wires on left-side	SPST-NO	**D2QW-C003ML**	**D2QW-C103ML**
		SPST-NC	**D2QW-C002ML**	**D2QW-C102ML**
	Molded lead wires on right-side	SPST-NO	**D2QW-C003MR**	**D2QW-C103MR**
		SPST-NC	**D2QW-C002MR**	**D2QW-C102MR**
Simulated Roller Lever	PCB	SPST-NO	**D2QW-C073D**	**D2QW-C173D**
		SPST-NC	**D2QW-C072D**	**D2QW-C172D**
	Solder	SPST-NO	**D2QW-C073H**	**D2QW-C173H**
		SPST-NC	**D2QW-C072H**	**D2QW-C172H**
	Molded lead wires downwards	SPST-NO	**D2QW-C073M**	**D2QW-C173M**
		SPST-NC	**D2QW-C072M**	**D2QW-C172M**
	Molded lead wires on left-side	SPST-NO	**D2QW-C073ML**	**D2QW-C173ML**
		SPST-NC	**D2QW-C072ML**	**D2QW-C172ML**
	Molded lead wires on right-side	SPST-NO	**D2QW-C073MR**	**D2QW-C173MR**
		SPST-NC	**D2QW-C072MR**	**D2QW-C172MR**
Leaf lever	PCB	SPST-NO	**D2QW-C063D**	**D2QW-C163D**
		SPST-NC	**D2QW-C062D**	**D2QW-C162D**
	Solder	SPST-NO	**D2QW-C063H**	**D2QW-C163H**
		SPST-NC	**D2QW-C062H**	**D2QW-C162H**
	Molded lead wires downwards	SPST-NO	**D2QW-C063M**	**D2QW-C163M**
		SPST-NC	**D2QW-C062M**	**D2QW-C162M**
	Molded lead wires on left-side	SPST-NO	**D2QW-C063ML**	**D2QW-C163ML**
		SPST-NC	**D2QW-C062ML**	**D2QW-C162ML**
	Molded lead wires on right-side	SPST-NO	**D2QW-C063MR**	**D2QW-C163MR**
		SPST-NC	**D2QW-C062MR**	**D2QW-C162MR**
Bent leaf lever	PCB	SPST-NO	**D2QW-C083D**	**D2QW-C183D**
		SPST-NC	**D2QW-C082D**	**D2QW-C182D**
	Solder	SPST-NO	**D2QW-C083H**	**D2QW-C183H**
		SPST-NC	**D2QW-C082H**	**D2QW-C182H**
	Molded lead wires downwards	SPST-NO	**D2QW-C083M**	**D2QW-C183M**
		SPST-NC	**D2QW-C082M**	**D2QW-C182M**
	Molded lead wires on left-side	SPST-NO	**D2QW-C083ML**	**D2QW-C183ML**
		SPST-NC	**D2QW-C082ML**	**D2QW-C182ML**
	Molded lead wires on right-side	SPST-NO	**D2QW-C083MR**	**D2QW-C183MR**
		SPST-NC	**D2QW-C082MR**	**D2QW-C182MR**

Contact form

●SPST-NO

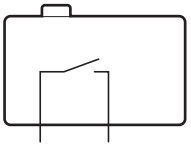

●SPST-NC

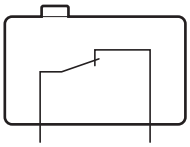

Contact Specifications

Model		C0 series	C1 series
Contact	Specification	Slide	
	Material	Gold plated	Silver plated
Minimum applicable load (see note)		5 VDC 1mA	

Ratings

Rated voltage	Resistive load
30 VDC 14 VDC	0.1A 10mA

Note. The above rating values apply under the following test conditions.
(1) Ambient temperature: 20±2°C
(2) Ambient humidity: 65±5%
(3) Operating frequency: 20 operations/min

Characteristics

Permissible operating speed		SPST-NO: 1 mm to 500 mm/s SPST-NC: 30 mm to 500 mm/s
Permissible operating frequency		120 operations/min
Insulation resistance		100 MΩ min. (at 500 VDC with insulation tester)
Contact resistance (initial value)	Terminal models	100 mΩ max.
	Molded lead wire models	150 mΩ max.
Dielectric strength	Between terminals of the same polarity	600 VAC 50/60 Hz 1min
	Between current-carrying metal parts and ground	1,500 VAC 50/60 Hz 1min
	Between terminals and non-current-carrying metal parts	1,500 VAC 50/60 Hz 1min
Vibration resistance	Malfunction	10 to 55 Hz, 1.5 mm double amplitude
Shock resistance	Durability	1,000 m/s² {approx. 100G} max.
	Malfunction	300 m/s² {approx. 30G} max.
Durability	Mechanical	500,000 operations min. (30 operations/min)
	Electrical	30 VDC 0.1 A 200,000 operations min. 14 VDC 10 mA 500,000 operations min. (20 operations/min)
Degree of protection		IEC IP67 (excluding the terminals)
Degree of protection against electric shock		Class I
Proof tracking index (PTI)		175
Ambient operating temperature		–40°C to +85°C (at ambient humidity of 60% max.) (with no icing or condensation)
Ambient operating humidity		95% max. (for +5°C to +35°C)
Weight		Approx. 0.7 g (for pin plunger models)

Mounting Structure and Reference Positions for Operating Characteristics (Units: mm)

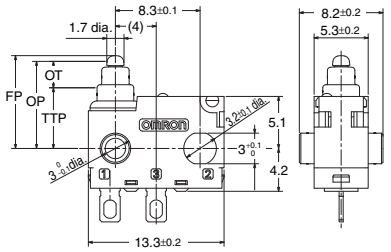

Mounting Hole Dimensions (Reference)

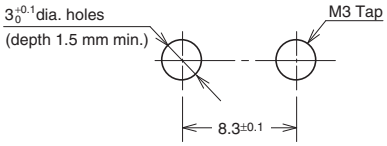

D2QW

Terminals/Appearances (Units: mm)

●PCB terminals

SPST-NO

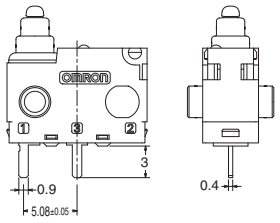

SPST-NC

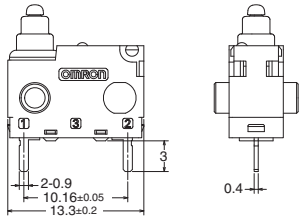

<PCB Mounting Dimensions (Reference)>

SPST-NO

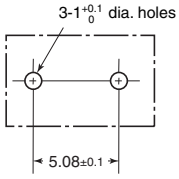

SPST-NC

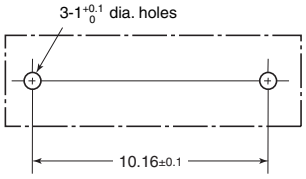

●Solder terminals

SPST-NO

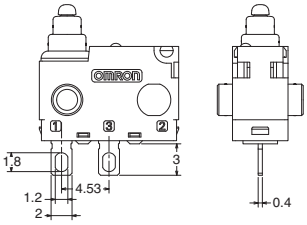

SPST-NC

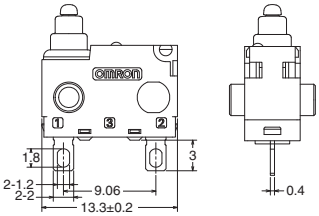

●Molded lead wires

Molded lead wires on left-side

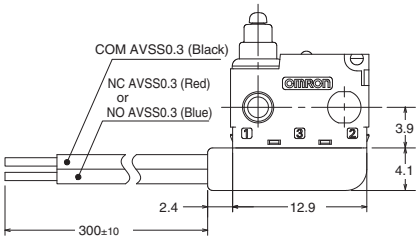

Molded lead wires on right-side

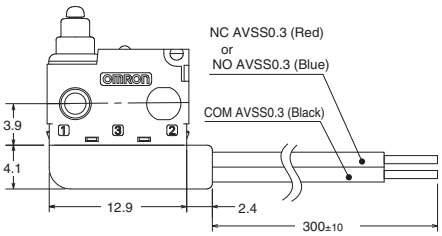

Molded lead wires downwards

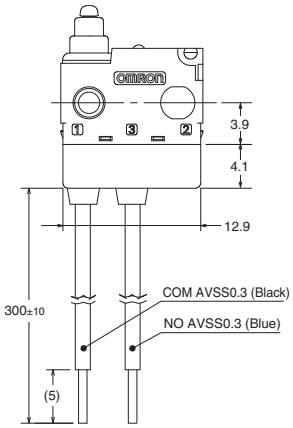

Dimensions (Unit: mm) /Operating Characteristics

The illustrations and drawings are for solder terminals models.
Refer to "Terminals/Appearances" of the previous page for details on models with Straight PCB terminals.
When ordering, replace □ with the code for the terminal that you need.

●Pin plunger

D2QW-C□02□
D2QW-C□03□

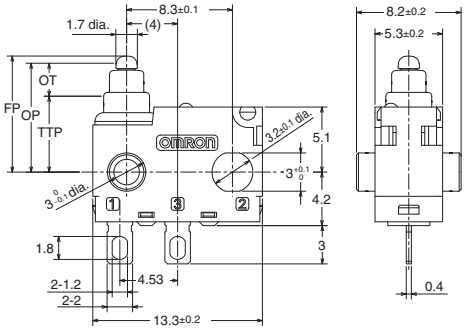

Operating characteristics	Model	D2QW-C□02□	D2QW-C□03□
Operating Force	OF Max.	1.5 N {153 gf}	1.5 N {153 gf}
Overtravel	OT	(2.9) mm	(2.7) mm
Free Position	FP Max.	9.2 mm	9.2 mm
Operating Position	OP	8.7±0.3 mm	8.4±0.3 mm
Total Travel Position	TTP	5.9 mm	5.9 mm

●Leaf lever

D2QW-C□62□
D2QW-C□63□

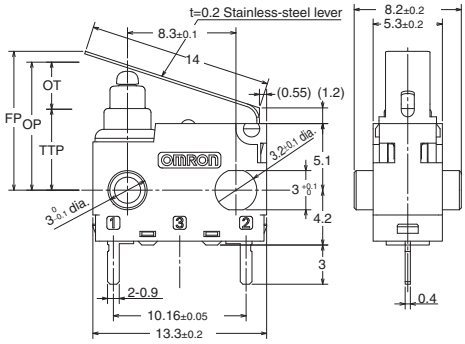

Operating characteristics	Model	D2QW-C□62□	D2QW-C□63□
Operating Force	OF Max.	1.7 N {173 gf}	1.7 N {173 gf}
Overtravel	OT	(3.7) mm	(3.2) mm
Free Position	FP Max.	11.5 mm	11.5 mm
Operating Position	OP	9.8±0.5 mm	9.3±0.5 mm
Total Travel Position	TTP	6.2 mm	6.2 mm

●Simulated roller leaf lever

D2QW-C□72□
D2QW-C□73□

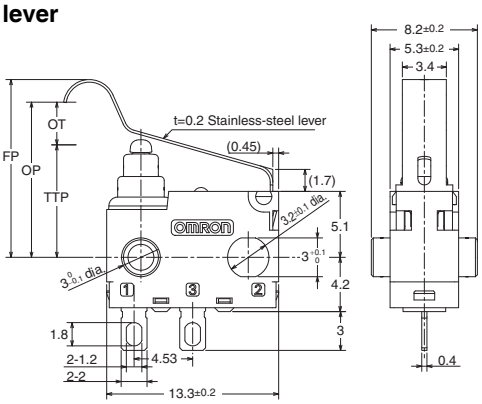

Operating characteristics	Model	D2QW-C□72□	D2QW-C□73□
Operating Force	OF Max.	1.5 N {153 gf}	1.5 N {153 gf}
Overtravel	OT	(3.9) mm	(3.5) mm
Free Position	FP Max.	14.4 mm	14.4 mm
Operating Position	OP	12.5±0.5 mm	12.0±0.5 mm
Total Travel Position	TTP	8.7 mm	8.7 mm

●Bent leaf lever

D2QW-C□82□
D2QW-C□83□

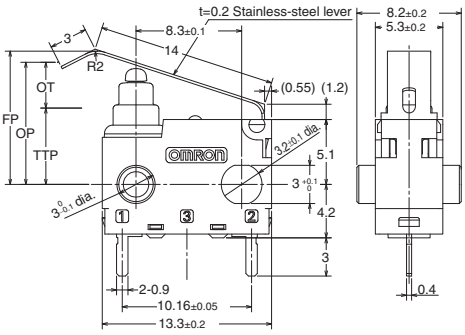

Operating characteristics	Model	D2QW-C□82□	D2QW-C□83□
Operating Force	OF Max.	1.7 N {173 gf}	1.7 N {173 gf}
Overtravel	OT	(3.7) mm	(3.2) mm
Free Position	FP Max.	11.3 mm	11.3 mm
Operating Position	OP	9.6±0.5 mm	9.1±0.5 mm
Total Travel Position	TTP	6.0 mm	6.0 mm

Precautions

★Please refer to "Basic Switches Common Switches" for correct use.

Cautions

●Degree of Protection

- Do not use this product underwater.
  Although molded lead wire models satisfy the test conditions for the standard given below, this test is to check the ingress of water into the switch enclosure after submerging the Switch in water for a given time. Satisfying this test condition does not mean that the Switch can be used underwater.
- JIS (Japanese Industrial Standards)
  C0920 (Waterproof test of the electrical machinery/appliance and wiring materials)
  Degree of protection: 7, Model: Waterproof
- IEC (International Electrotechnical Commission)
  Publication 529 (Degrees of Protection Provided by Enclosures)
  Degree of protection: IP67
- Do not operate the Switch when it is exposed to water spray, or when water drops adhere to the Switch surface, or during sudden temperature changes, otherwise water may intrude into the interior of the Switch due to a suction effect.
- Prevent the Switch from coming into contact with oil and chemicals. Otherwise, damage to or deterioration of Switch materials may result.
- Do not use the Switch in areas where it is exposed to silicon adhesives, oil, or grease. Otherwise faulty contact may result due to the generation of silicon oxide.

●Soldering

- When soldering the lead wire to the terminal, first insert the lead wire conductor through the terminal hole and then conduct soldering. Complete soldering within 3 seconds using a soldering iron with a capacity of 50 W max and a tip temperature of 300°C max. Also, do not apply external force to the Switch for 1 minute after soldering.
  Improper soldering involving an excessively high temperature or excessive soldering time may deteriorate the characteristics of the Switch.
  When performing automatic soldering, solder at 260 °C max and complete soldering with 5 seconds. Pay careful attention so that flux or solder liquid does not flow over the edge of the PCB panel.

●Side-actuated (Cam/Dog) Operation

- When using a cam or dog to operate the Switch, factors such as the operating speed, operating frequency, push-button indentation, and material and shape of the cam or dog will affect the durability of the Switch. Confirm performance specifications under actual operation conditions before using the Switch in applications.

Please check each region's Terms & Conditions by region website.

Correct Use

●Mounting

- Turn OFF the power supply before mounting or removing the Switch, wiring, or performing maintenance or inspection. Failure to do so may result in electric shock or burning.
- When mouting with screw, use M3 mounting screw with plane washers or spring washers to securely mount the Switch. Tighten the screws to a torque of 0.27 to 0.29 N·m {28 to 30 gf}. Exceeding the specified torque may result in deterioration of the sealing or damage.
- Secure the posts by thermal caulking or by pressing into an attached device. When pressed into an attached device, provide guides on the opposite ends of the posts to ensure that they do not fall out or rattle.

●Operating Body

- Use an operating body with low frictional resistance and of a shape that will not interfere with the sealing rubber, otherwise the plunger may be damaged or the sealing may deteriorate.

●Handling

- Do not handle the Switch in a way that may cause damage to the sealing rubber.
- When handling the Switch, ensure that pressure is not applied to the posts in the directions shown in the following diagram. Also, ensure that uneven pressure or pressure in a direction other than the operating direction is not applied to the Actuator as shown in the following diagram. Otherwise, the post, Actuator, or Switch may be damaged, or the durability may be reduced.

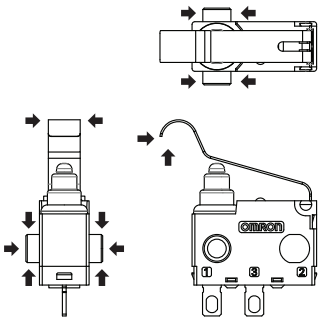

●Using Micro Loads

- Even when using micro load models within the operating range, if inrush/surge current occurs, it may increase the contact wear and so decrease durability. Therefore, insert a contact protection circuit where necessary.

OMRON Corporation
Electronic and Mechanical Components Company

Regional Contact

Americas
https://www.components.omron.com/
Asia-Pacific
https://ecb.omron.com.sg/
Korea
https://www.omron-ecb.co.kr/
Europe
http://components.omron.eu/
China
https://www.ecb.omron.com.cn/
Japan
https://www.omron.co.jp/ecb/

© OMRON Corporation 2007-2020 All Rights Reserved.
In the interest of product improvement, specifications are subject to change without notice.

Cat. No. B117-E1-07
0220(0207)(O)