REFER SHEET 2 FOR PART NUMBER & PACKAGING DETAILS
REFER SHEET 3 FOR TECHNICAL CHARATERITICS

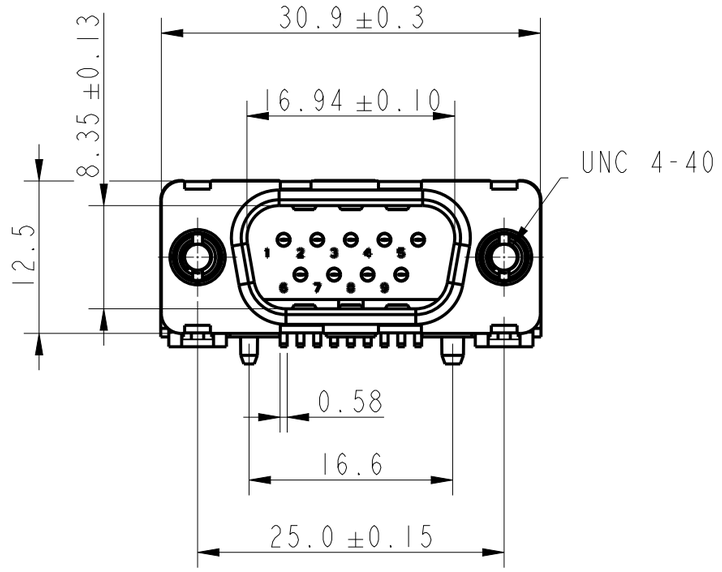

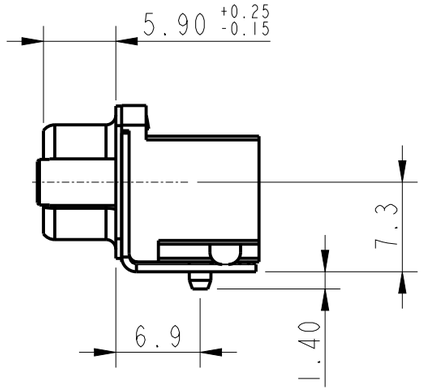

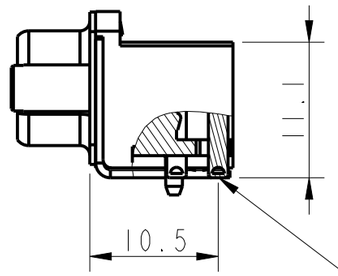

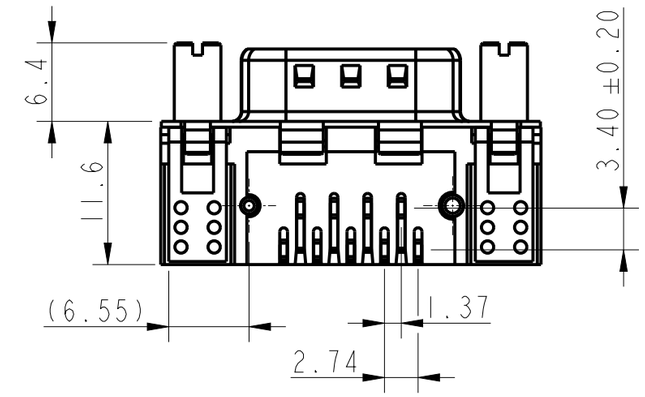

RECOMMENDED PCB LAYOUT

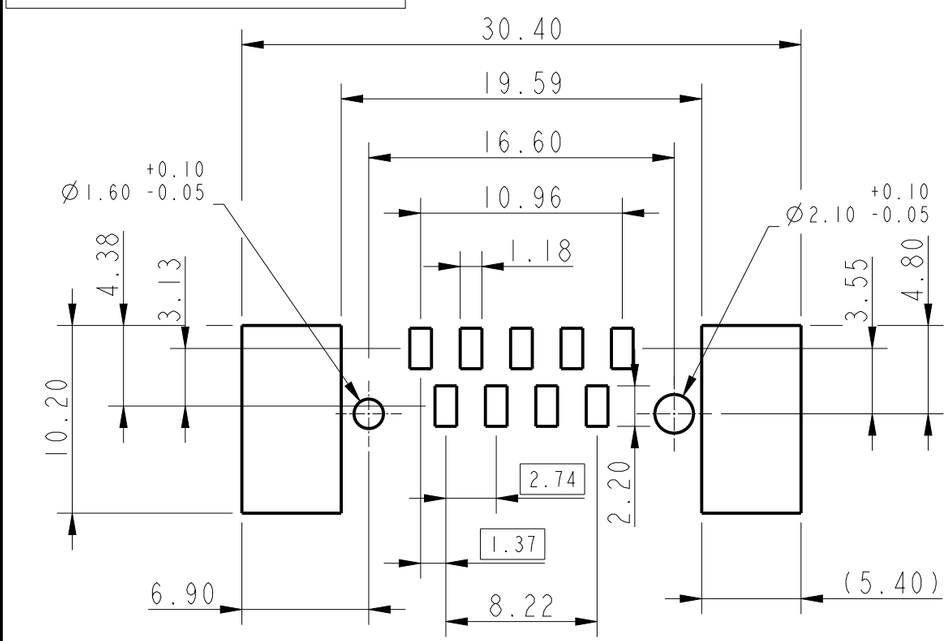

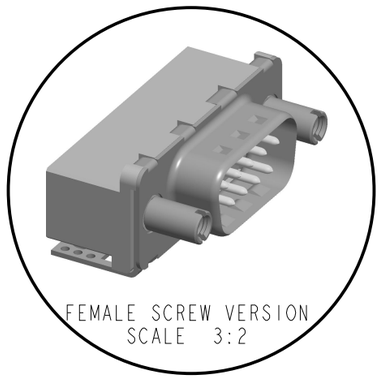
FEMALE SCREW VERSION
SCALE 3:2

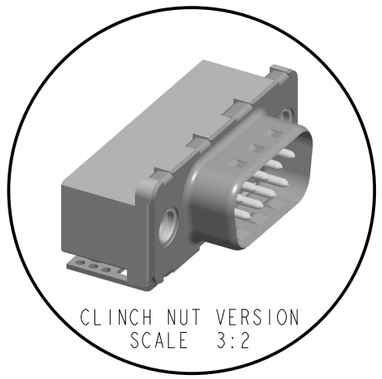
CLINCH NUT VERSION
SCALE 3:2

spec ref			
tolerance std ISO 406 ISO 1101	TOLERANCES UNLESS OTHERWISE SPECIFIED		
surface - ISO 1302	linear	0.X	±
		0.XX	±
		0.XXX	±
	angular	0°	±1°

dr	Gregar Mathew	2024/01/31
eng	Gregar Mathew	2025/09/23
chr	-	-
appr	Alex Babu	2025/09/24

projection | MM | size A3 | scale 2:1
product family -
ecn no ELX-I-57418-1
rel level Released

Amphenol FCi
title: D-SUB SMT CONNECTOR
09 POSITION MALE
dwg no 10166949c
rev B
amphenol-icc.com | cat. no. - | Product - Customer Drw | sheet 1 of 3

© 2020 Amphenol Corporation

Creo File:ELX-WC-A3C,REV F,2020-12-21

PDS: Rev :B
STATUS:Released
Printed: Sep 25, 2025

PACKAGING NOTES:

Packaging : Tape & Reel
Quantity Per Reel : 120 Connector/Reel (Leader Minimum,300 mm,Trailer Minimum 200 mm)

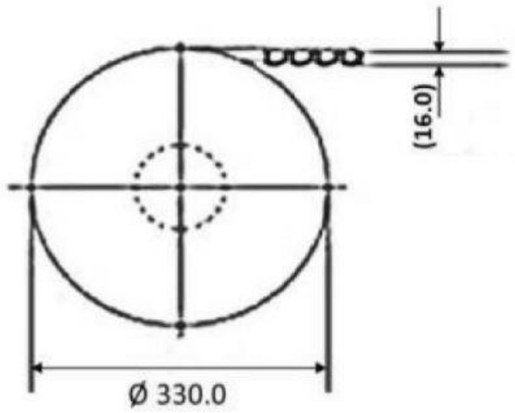

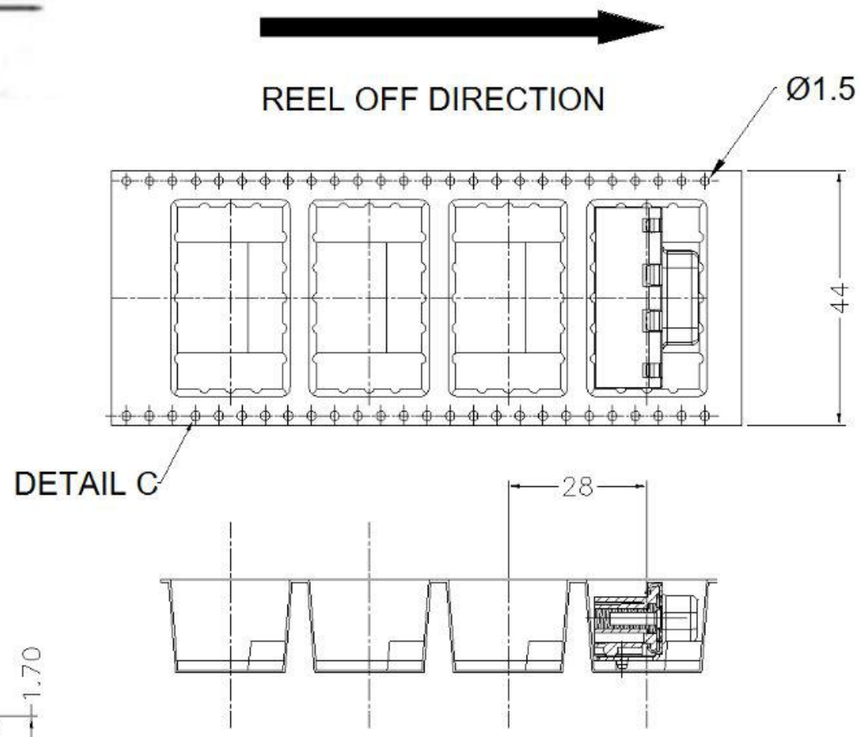

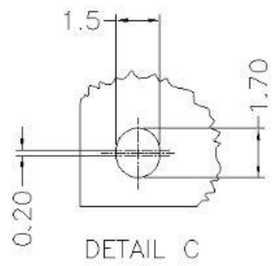

ELONGATED HOLE

ORDERING INFORMATION

D 09 P 70S 6 UX 12 LF

SERIES

No.OF CONTACTS
09

TYPE OF CONTACT
P - PIN

TERMINATION STYLE
70S - NORMAL SMT

LF - LEAD FREE

PACKAGING SPECIFICATION
12 - TAPE & REEL PACKING

MOUNTING OPTION
UL - INSERT M3
+ ELEC. CONTINUITY
UX - INSERT UNC 4.40
+ ELEC. CONTINUITY
UV - FEMALE SCREW 4.40
+ ELEC. CONTINUITY

PERFORMANCE CLASS
4 - 200 MATING/UNMATING
6 - 500 MATING/UNMATING

© 2020 Amphenol Corporation

spec ref				dr	Gregar Mathew	2024/01/31	projection	MM	size A3 / scale 2:1
tolerance std ISO 406 ISO 1101	TOLERANCES UNLESS OTHERWISE SPECIFIED			eng	Gregar Mathew	2025/09/23			ecn no ELX-I-57418-1
				chr	-	-			
				appr	Alex Babu	2025/09/24	product family -		rel level Released
surface - ISO 1302	linear	0.X	±	Amphenol FCi	title D-SUB SMT CONNECTOR 09 POSITION MALE			dwg no 10166949c	rev B
		0.XX	±						
		0.XXX	±						
	angular	0°	±1°	amphenol-icc.com	cat. no. -		Product - Customer Drw		sheet 2 of 3

NOTES:

PHYSICAL CHARACTERISTICS
- INSULATOR MATERIAL : LCP 30% GF
- CONTACT MATERIAL : COPPER ALLOY WITH AU/GXT PLATING
- CONTACT PLATING : MATING AREA, Au/GXT Over Ni
- GROUNDING MATERIAL : BRASS WITH MATTE TIN PLATING
- NUT/FEMALE SCREW : BRASS WITH MATTE TIN PLATING

ELECTRICAL CHARACTERISTICS
- MAXIMUM RATING CURRENT : 3.7A AT 70°C
- CONTACT RESISTANCE : <25mΩ
- VOLTAGE PROOF : >1000 V.r.m.s.
- RATED VOLTAGE : 300 V.r.m.s.
  - Insulation resistance : >5000MΩ
  - Creepage and clearance distance: >1mm
  - Average wiping length : 2mm

MECHANICAL CHARACTERISTICS
- RETENTION AGAINST TORQUE :
  - CLINCH NUT : 0.7 N.m Maximum
  - FEMALE SCREW : 0.5 N.m Maximum

NOTE RoHS INFORMATIONS
- The "LF" products meet European union Directives and other country regulations as described in GS-47-0004
- The housing will whistand exposure to 260 C peak temperature for 3.5 seconds in a reflow solder application with a 1.6 mm minimum thick circuit board.

© 2020 Amphenol Corporation

spec ref				dr	Gregar Mathew	2024/01/31	projection	MM	size A3 / scale 2:1
tolerance std ISO 406 ISO 1101	TOLERANCES UNLESS OTHERWISE SPECIFIED			eng	Gregar Mathew	2025/09/23			ecn no ELX-I-57418-1
				chr	-	-			
				appr	Alex Babu	2025/09/24	product family -		rel level Released
surface - ISO 1302	linear	0.X	±	Amphenol FCi	title D-SUB SMT CONNECTOR 09 POSITION MALE			dwg no 10166949c	rev B
		0.XX	±						
		0.XXX	±						
	angular	0°	±1°	amphenol-icc.com	cat. no. -		Product - Customer Drw		sheet 3 of 3