CUI Devices is now Same Sky! Learn More

MODEL: CPT-2521C-500 | DESCRIPTION: PIEZO BUZZER TRANSDUCER

FEATURES

- externally driven
- wire leads
- IP68 rated

SPECIFICATIONS

parameter	conditions/description	min	typ	max	units
operating voltage				50	Vp-p
current consumption	at 20 Vp-p, 3,700 Hz square wave			40	mA
rated frequency			3,700		Hz
sound pressure level	at 30 cm, 20 Vp-p, 3,700 Hz square wave	95			dB
electrostatic capacity	at 120 Hz/1 V	17,500	25,000	32,500	pF
dimensions	Ø25.6 x 21.6				mm
weight				15.0	g
material	PBT+15% GF				
terminal	wire type				
operating temperature		-30		85	°C
storage temperature		-40		95	°C
RoHS	yes				
IP level	IP68 (IEC standard 529 edition 2.0 (1989))				

Notes: 1. All specifications measured at 5~35°C, humidity at 45~85%, under 86~106 kPa pressure, unless otherwise noted.

SOLDERABILITY

parameter	conditions/description	min	typ	max	units
hand soldering	for maximum 5 seconds	330		380	°C

MECHANICAL DRAWING

units: mm
tolerance: ±0.5 mm

wire: UL1007 LF 22 AWG

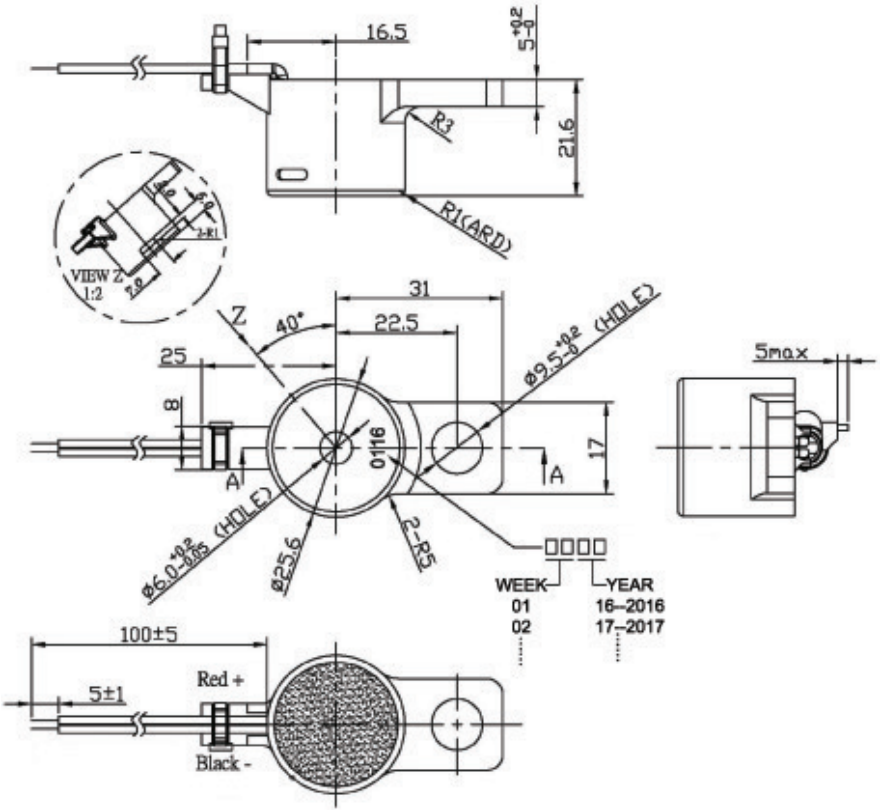

FREQUENCY RESPONSE CURVE

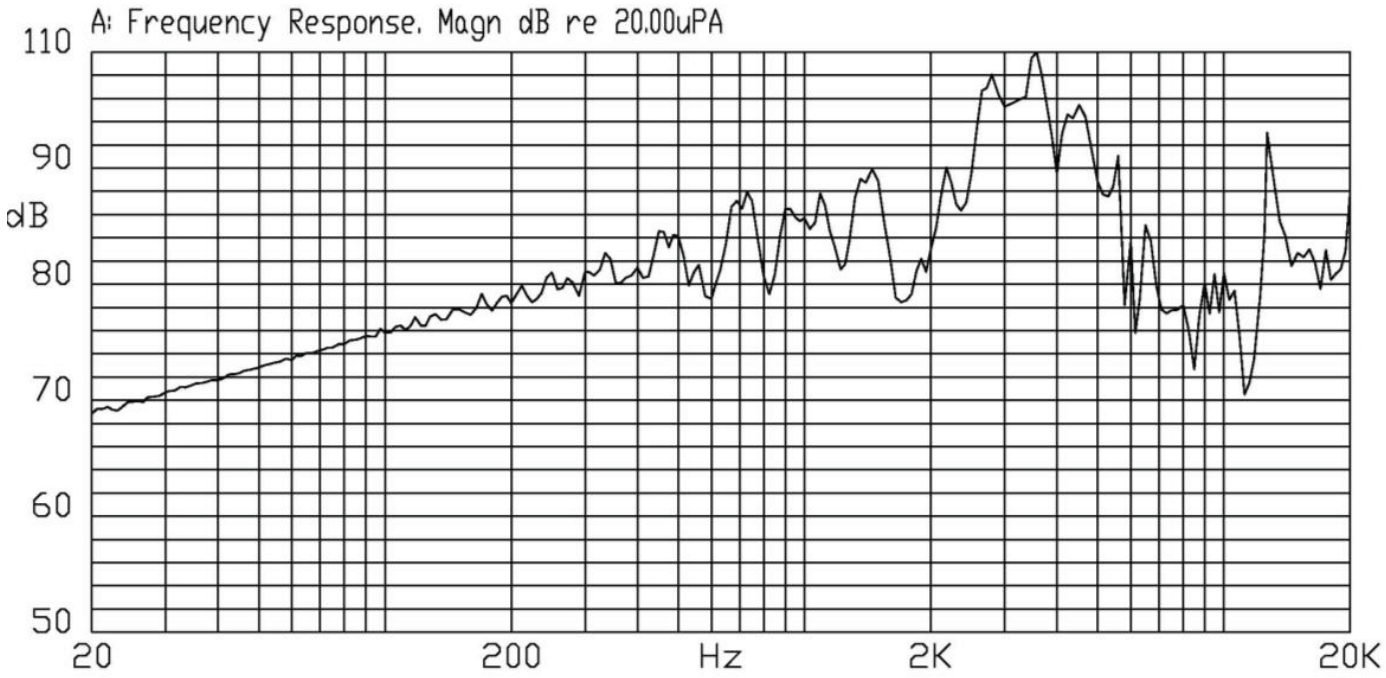

PACKAGING

units: mm

Outer Box Size: 310 x 248 x 49 mm
Carton Size: 550 x 330 x 290 mm
Outer Box QTY: 30 pcs per outer box
Carton QTY: 300 pcs per carton

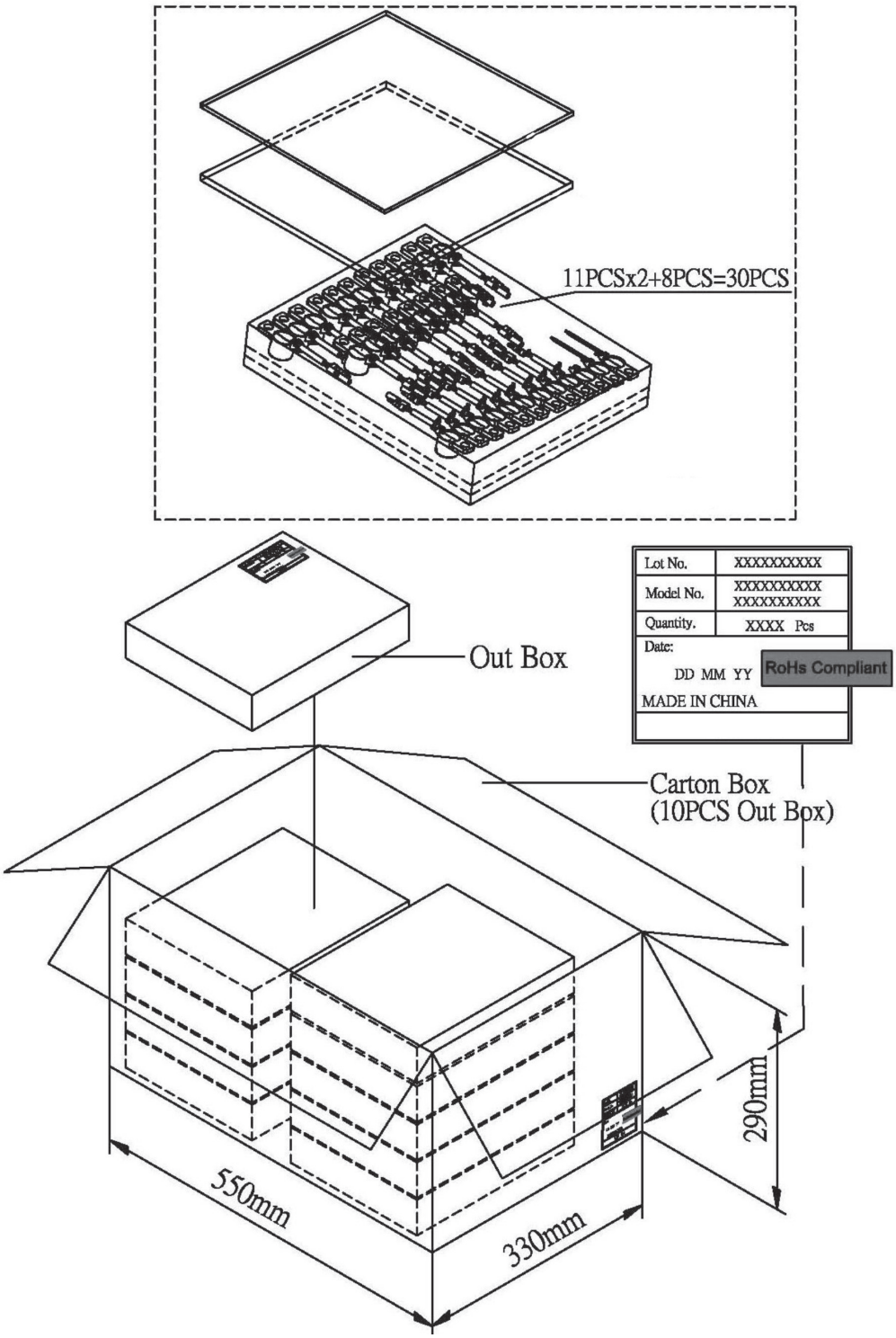

REVISION HISTORY

rev.	description	date
1.0	initial release	03/31/2016
1.01	brand update	12/05/2019
1.02	logo, datasheet style update	08/05/2022
1.03	CUI Devices rebranded to Same Sky	09/11/2024

The revision history provided is for informational purposes only and is believed to be accurate.

Same Sky offers a one (1) year limited warranty. Complete warranty information is listed on our website.

Same Sky reserves the right to make changes to the product at any time without notice. Information provided by Same Sky is believed to be accurate and reliable. However, no responsibility is assumed by Same Sky for its use, nor for any infringements of patents or other rights of third parties which may result from its use.

Same Sky products are not authorized or warranted for use as critical components in equipment that requires an extremely high level of reliability. A critical component is any component of a life support device or system whose failure to perform can be reasonably expected to cause the failure of the life support device or system, or to affect its safety or effectiveness.