CUI Devices is now Same Sky! Learn More

SERIES: CPT-2416-85T | DESCRIPTION: PIEZO BUZZER INDICATOR

FEATURES

- 12 Vdc rated
- 85 dB
- through hole

SPECIFICATIONS

parameter	conditions/description	min	typ	max	units
rated voltage			12		Vdc
operating voltage		8		16	Vdc
current consumption	at rated voltage			16	mA
rated frequency		2,400	2,900	3,400	Hz
sound pressure level	at 30 cm, rated voltage	85			dB
tone	continuous at rated voltage				
dimensions	Ø23.8 x16.0				mm
weight				4.5	g
material	ABS (UL94V-0)				
terminal	pins (gold plated)				
operating temperature		-30		85	°C
storage temperature		-40		95	°C
washable	no				
RoHS	yes				

Notes: 1. All specifications measured at 5~35°C, humidity at 45~85%, under 86~106kPa pressure, unless otherwise noted.

SOLDERABILITY

parameter	conditions/description	min	typ	max	units
hand soldering	maximum 3 seconds	340	350	360	°C

MECHANICAL DRAWING

units: mm
tolerance: ±0.5 mm

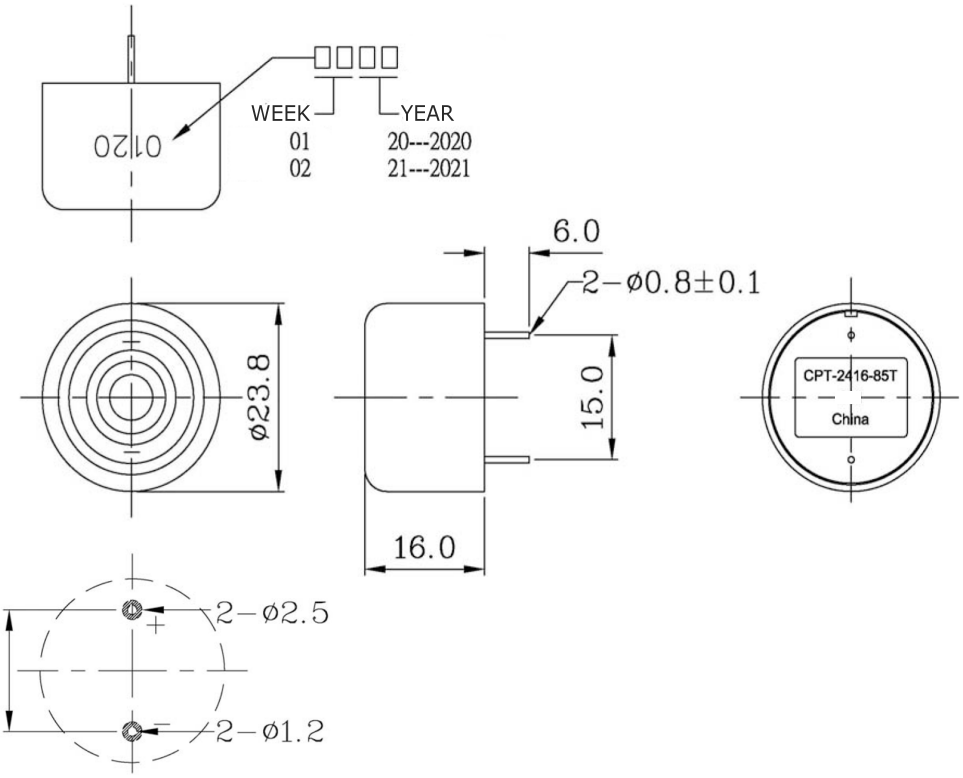

Recommended PCB Layout
Top View

PERFORMANCE CURVES

P: Voltage vs. Sound Pressure Level
I: Voltage vs. Current Consumption

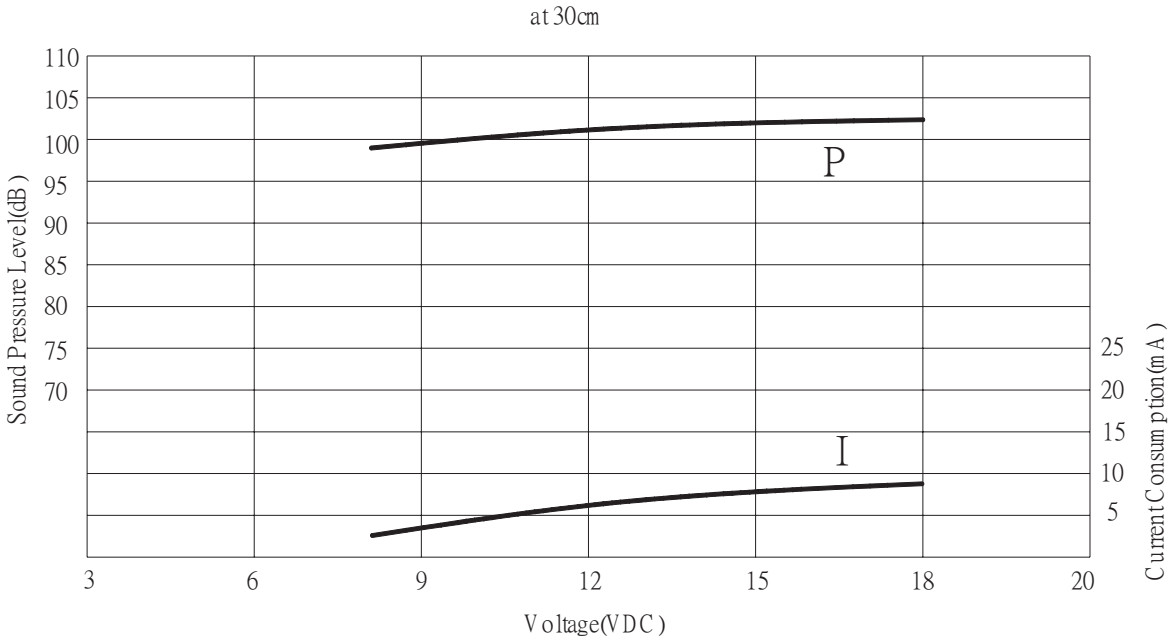

PACKAGING

units: mm

Carton Size: 550 x 330 x 290 mm
Carton QTY: 2,500 pcs per carton

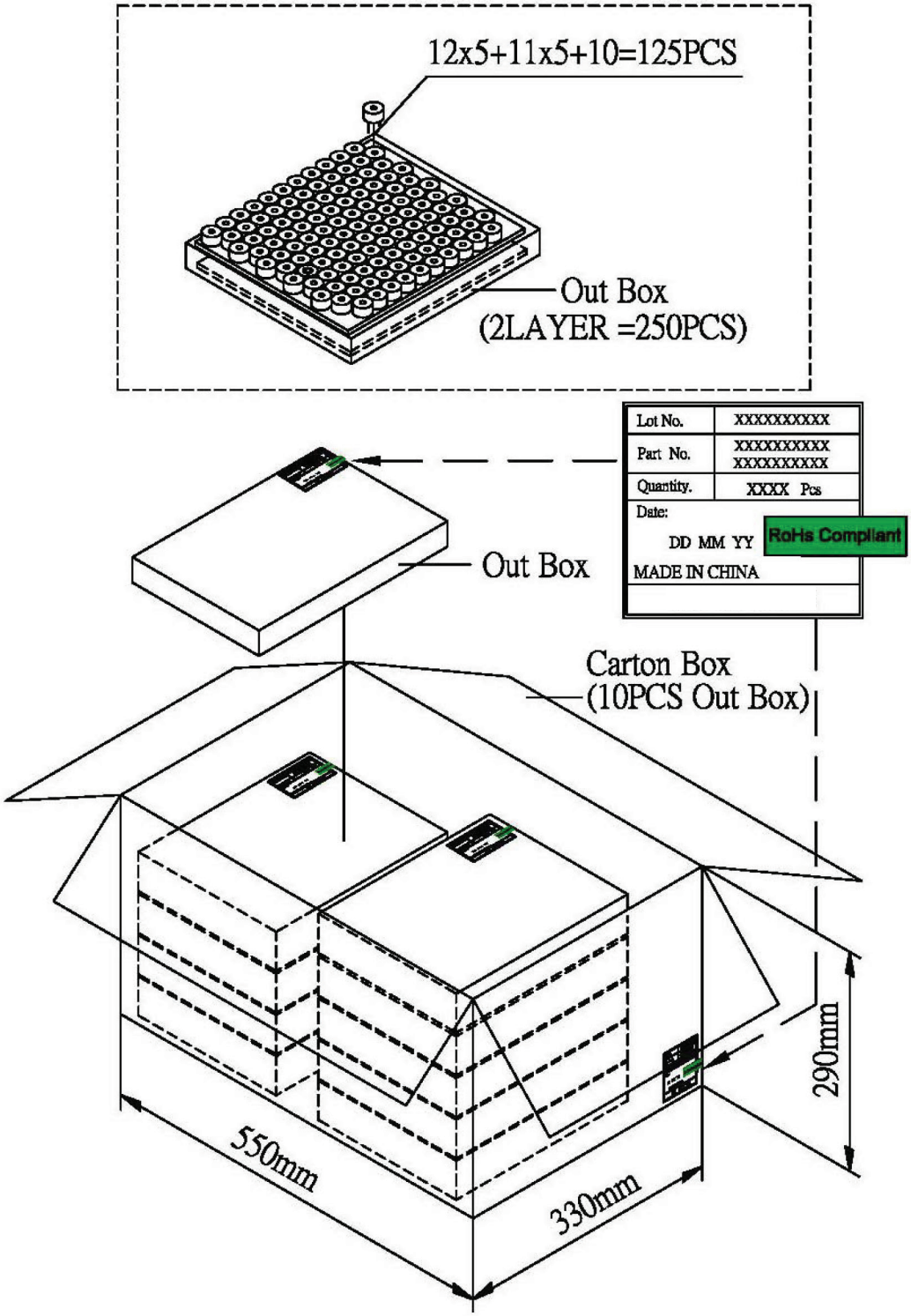

REVISION HISTORY

rev.	description	date
1.0	initial release	09/15/2020
1.01	logo, datasheet style update	08/05/2022
1.02	CUI Devices rebranded to Same Sky	09/11/2024

The revision history provided is for informational purposes only and is believed to be accurate.

Same Sky offers a one (1) year limited warranty. Complete warranty information is listed on our website.

Same Sky reserves the right to make changes to the product at any time without notice. Information provided by Same Sky is believed to be accurate and reliable. However, no responsibility is assumed by Same Sky for its use, nor for any infringements of patents or other rights of third parties which may result from its use.

Same Sky products are not authorized or warranted for use as critical components in equipment that requires an extremely high level of reliability. A critical component is any component of a life support device or system whose failure to perform can be reasonably expected to cause the failure of the life support device or system, or to affect its safety or effectiveness.