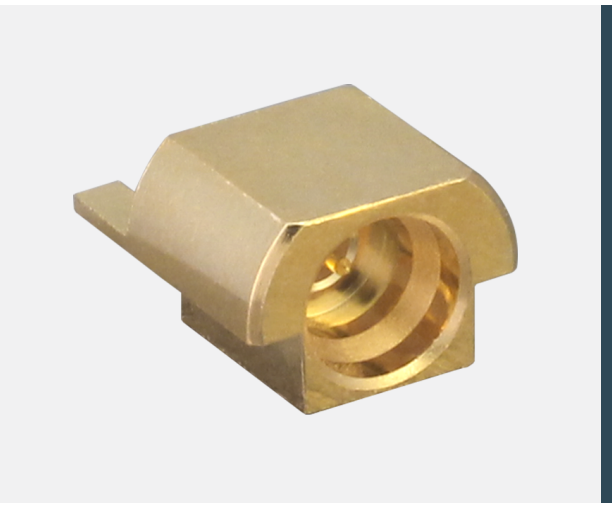

CONSMP024-G

SMP Plug PCB Cutout Edge Mount Connector

Operating from 0 GHz to 20 GHz, the CONSMP024-G provides high performance and reliability in a small package. Mounting in a cutout/notch in a printed circuit board (PCB), the CONSMP024-G is more compact than standard board edge mount connectors and is ideal for space constrained applications. Linx SMP connectors are ideal for making board-to-board connections. Additionally, all Linx connectors meet RoHS lead free standards and are tested to meet requirements for corrosion resistance, vibration, mechanical and thermal shock.

FEATURES

- 0 to 20 GHz operation
- Gold plating
  - Superior corrosion resistance
- SMP plug (male pin) connection
  - Gold plated beryllium copper center contact
- Ideal for board-to-board connections
- Direct PCB attachment
- Reflow- or hand-solder assembly

APPLICATIONS

- Cellular IoT
  - LTE-M (Cat-M1), NB-IoT
- Cellular
  - 5G/4G LTE/3G/2G
- WiFi/WLAN
  - WiFi 6/6E
- GNSS
  - GPS, Galileo, GLONASS, BeiDou, QZSS
- Radar, Satellite Communications, Experimental
- Industrial, Commercial, Enterprise

TABLE 1. ELECTRICAL SPECIFICATIONS

Parameter	Value	
Impedance	50 Ω	
Frequency Range	0 to 20 GHz	
Voltage Rating	320 V RMS	
Contact Resistance	Center: ≤ 6.0 mΩ Outer: ≤ 3.0 mΩ	
Select Frequencies	5 GHz to 7.125 GHz	12 GHz to 18 GHz
Insertion Loss (dB max.)	0.47	1.81
VSWR (max.)	1.2	1.4

ORDERING INFORMATION

Part Number	Description
CONSMP024-G	SMP plug (male pin) PCB cutout edge mount connector

Available from Linx Technologies and select distributors and representatives.

PRODUCT DIMENSIONS

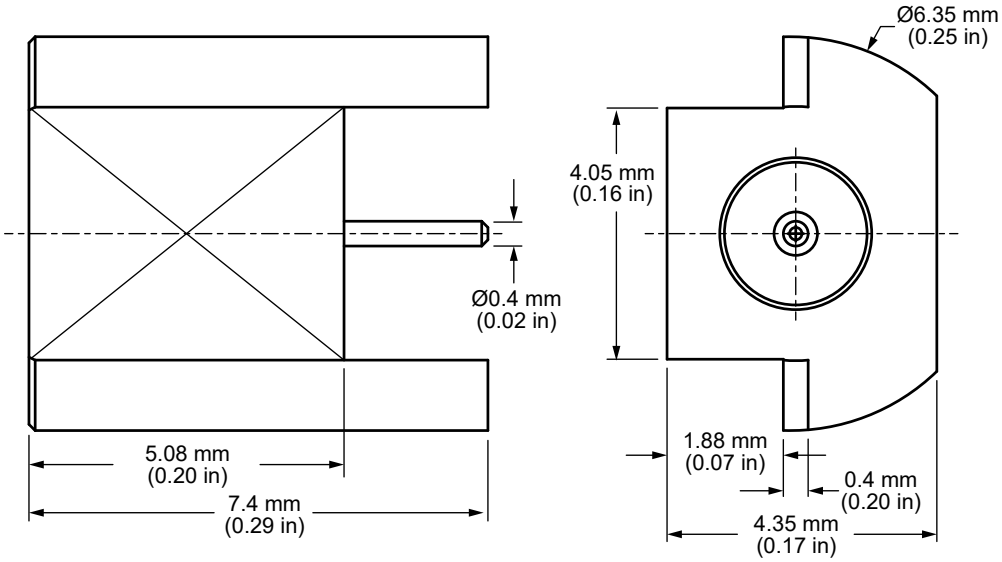

Figure 1. Product Dimensions for the CONSMP024-G Connector Table

2. CONNECTOR COMPONENTS

Connector Part	Material	Finish
Connector Body	Beryllium Copper	Gold
Center Contact (male pin)	Beryllium Copper	Gold
Insulator	PTFE	–

RECOMMENDED PCB FOOTPRINT

Figure 2 shows the connectors recommended PCB footprint.

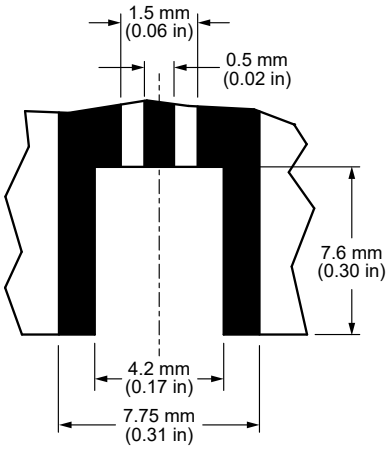

Figure 2. Recommended PCB Dimensions for the CONSMP024-G

CONNECTOR PERFORMANCE

Table 3 shows insertion loss and VSWR values for the CONSMP024-G connector at commonly used frequencies.

Insertion loss is the loss of signal power (gain) resulting from the insertion of a device in a transmission line. VSWR describes how efficiently power is transmitted through the connector. A lower VSWR value indicates better performance at a given frequency.

TABLE 3. INSERTION LOSS AND VSWR FOR THE CONSMP024-G CONNECTOR

Band	Low-Band Cellular/ ISM/LPWA	GNSS, Midband Cellular, Wifi	WiFi 6E	Ku
Frequency Range	400 MHz to 960 MHz	1.1 GHz to 5 GHz	5 GHz to 7.125 GHz	12 GHz to 18 GHz
Insertion Loss (dB max.)	0.11	0.32	0.47	1.81
VSWR (max.)	1.0	1.1	1.2	1.4

TABLE 4. MECHANICAL SPECIFICATIONS

Model	CONSMP024-G
Mounting Type	PCB Surface Mount
Fastening Type	Snap-on Coupling
Interface in Accordance with	MIL-STD-348B
Connector Durability	100 cycles min.
Weight	0.7 g (0.02 oz)

TABLE 5. ENVIRONMENTAL SPECIFICATIONS

MIL-STD, Method, Test Condition	
Corrosion (Salt spray)	MIL-STD-202 Method 101 test condition B
Thermal Shock	MIL-STD-202 Method 107 test condition C
Vibration	MIL-STD-202 Method 204 test condition B
Mechanical Shock	MIL-STD-202 Method 213 test condition B
Moisture Resistance	MIL-STD-202 Method 106 test condition D
Temperature Range	-65 °C to +165 ° C
Environmental Compliance	RoHS

REFLOW SOLDER PROFILE

Figure 5 shows the time and temperature data for reflow soldering the connector to a PCB.

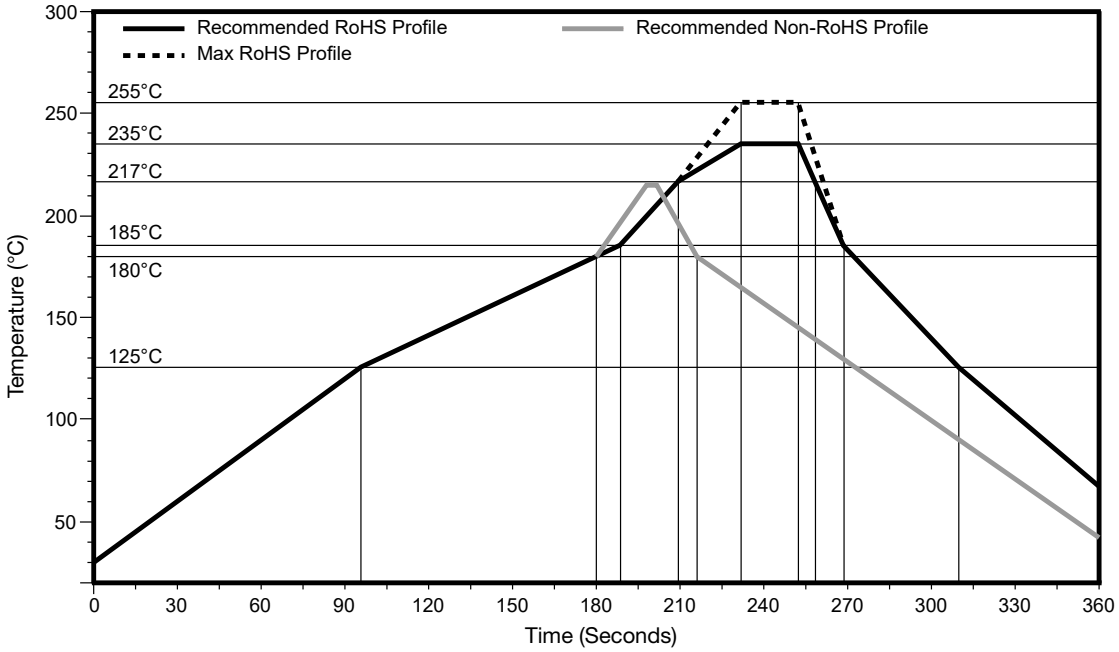

Figure 3. Recommended Reflow Solder Profile

PACKAGING INFORMATION

The CONSMP024-G connector is packaged in plastic trays of 100 pcs. Distribution channels may offer alternative packaging options.

CONNECTOR & ADAPTER DEFINITIONS AND USEFUL FORMULAS

VSWR - Voltage Standing Wave Ratio. VSWR is a unitless ratio that describes how efficiently power is transmitted through the connector. A lower VSWR value indicates better performance at a given frequency. VSWR is easily derived from Return Loss.

$$\mathrm{VSWR} = \frac{10^{\left[\frac{\mathrm{Return\ \ Loss}}{20}\right]} + 1}{10^{\left[\frac{\mathrm{Return\ \ Loss}}{20}\right]} - 1}$$

Insertion Loss - Insertion Loss - The loss of signal power (gain) resulting from the insertion of a device in a transmission line. Insertion loss can be derived from the power transmitted to the load before the insertion of the component PT and the power transmitted to the load after the insertion of the component P_R.

$$Insertion\ Loss\ (\mathrm{dB}) = 10 \log_{10} \frac{P_T}{P_R}$$

TE TECHNICAL SUPPORT CENTER

USA:	+1 (800) 522-6752
Canada:	+1 (905) 475-6222
Mexico:	+52 (0) 55-1106-0800
Latin/S. America:	+54 (0) 11-4733-2200
Germany:	+49 (0) 6251-133-1999
UK:	+44 (0) 800-267666
France:	+33 (0) 1-3420-8686
Netherlands:	+31 (0) 73-6246-999
China:	+86 (0) 400-820-6015

te.com

TE Connectivity, TE, TE connectivity (logo), Linx and Linx Technologies are trademarks owned or licensed by the TE Connectivity Ltd. family of companies. All other logos, products and/or company names referred to herein might be trademarks of their respective owners.

The information given herein, including drawings, illustrations and schematics which are intended for illustration purposes only, is believed to be reliable. However, TE Connectivity makes no warranties as to its accuracy or completeness and disclaims any liability in connection with its use. TE Connectivity's obligations shall only be as set forth in TE Connectivity's Standard Terms and Conditions of Sale for this product and in no case will TE Connectivity be liable for any incidental, indirect or consequential damages arising out of the sale, resale, use or misuse of the product. Users of TE Connectivity products should make their own evaluation to determine the suitability of each such product for the specific application.

TE Connectivity warrants to the original end user customer of its products that its products are free from defects in material and workmanship. Subject to conditions and limitations TE Connectivity will, at its option, either repair or replace any part of its products that prove defective because of improper workmanship or materials. This limited warranty is in force for the useful lifetime of the original end product into which the TE Connectivity product is installed. Useful lifetime of the original end product may vary but is not warrantied to exceed one (1) year from the original date of the end product purchase.

©2022 TE Connectivity. All Rights Reserved.

11/22 **Original**

Linx TECHNOLOGIES is now part of TE connectivity