CGF

POWER SUPPLY CONNECTOR

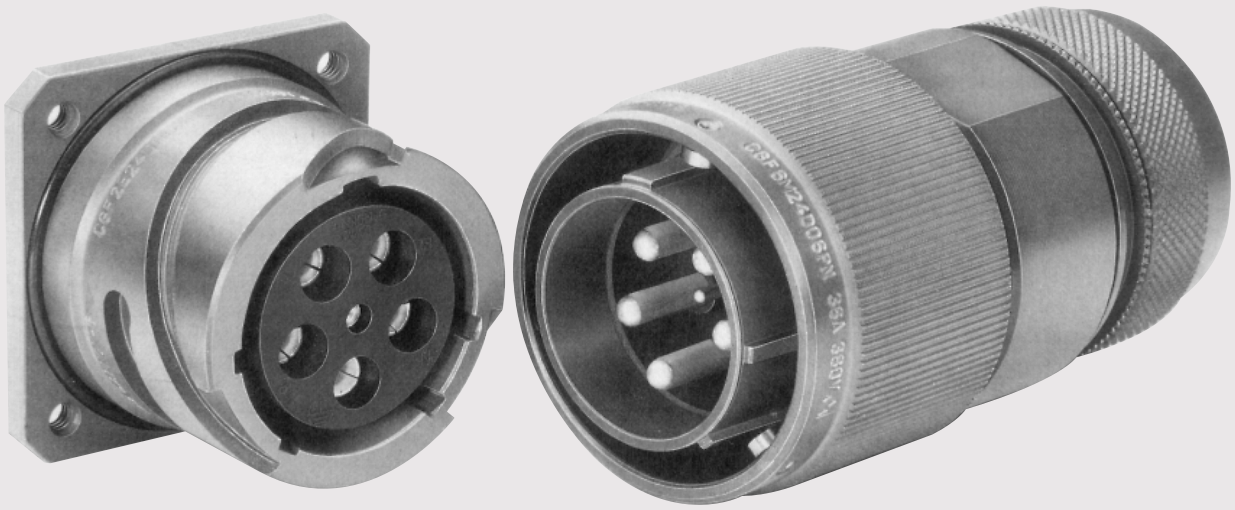

Cannon

ITT Industries
Engineered for life

Description

The circular connectors of the Cannon CGF series are employed to transmit high power in systems with voltages over 50 V. Cables according to MIL-W-5086, TL6145-009, TL6145-011 and MTV6145-005 can be used.

Features

- First-to-mate ground contact according to VDE 0623 connected to the shell
- First-to-break pilot contact according to VDE 0623 for mating and unmating without power
- Air and creepage paths according to VDE 0110, Insulation Group C, for 380 V
- Earthing continuity from receptacle to plug through grounding finger ring under coupling nut
- Contact arrangement and identification according to VDE 0623 requirements
- Endbells for shielding braid and heat shrinkable boots
- Five keyway shell polarisation ensures positive mating

Following shell styles are available:

Box mounting receptacle
optionally for front or rear mounting

Wall mounting receptacle
for shielding braid and heat shrinkable boots acc. to VG 95343

Plug
straight, for shielding braid and heat shrinkable boots acc. to VG 95343

Accessories
Series CA Bayonet gaskets (shielded and unshielded) can be used

How to order

CGF 6 M 36 D 06 P N - *

Series
CGF - Cannon designation

Shell style
0 - wall mounting receptacle with M endbell
2 - box mounting receptacle
6 - straight plug with M endbell

Class
E - environmental (shell style 2)
M - endbell for shielding and heat shrink boot (shell style 0 and 6)

Shell size
16, 20, 22, 24, 36

Termination
D - Crimp type

Contact arrangement
06 - 6-way, with pilot contact
05 - 5-way, without pilot contact
03 - 3-way

Contact type
P - pin contact
S - socket contact

Insert position
N - normal position 95°
Upon request:
A - 80°
B - 70°
C - 130°
D - 120°

Modification
002 - flange with 4 through holes
003 - crimp termination for cable 16 mm², shell size 36
006 - crimp termination for cable 4 mm², shell size 22

Technical data

Shell size	Contact arrangement	Current A	Voltage V	Air/Creepage path mm min.	Test voltage KV/Veff	Power contact mm^2	Wire size AWG	Pilot contact mm^2
16	16-03	16	250	2,8	2,5	1,5	16	-
20	20-05	16	380	3,8	2,8	1,5	16	-
22	22-06	32	380	4,2	3,0	2,5 (4,0)	12	0,75
24	24-06	63	380	5,0	3,5	10,0	-	0,75
36	36-06	125	380	7,5	4,5	25,0 (16)	-	1,5

Contact Arrangements

Pin front view

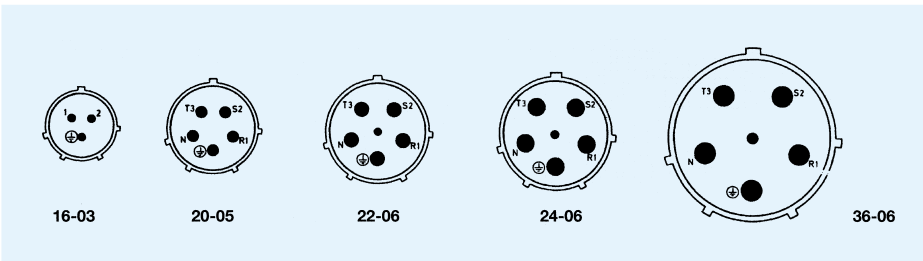

Materials

Shell	aluminum alloy
Shell finish	cadmium plated, olive chromate
Insulator	chloroprene elastomere
Contacts	copper alloy
Contact finish	hard silver plate and passivated

Metal dust caps

for receptacles

Shell size	with polyamide rope Standard (A66)	with chain
16	CGF 121003-7415	CGF 121003-7400
20	CGF 121003-7416	CGF 121003-7401
22	CGF 121003-7417	CGF 121003-7402
24	CGF 121003-7418	CGF 121003-7403
36	CGF 121003-7419	CGF 121003-7404

for plugs

Shell size	with polyamide rope Standard (A66)	with chain
16	CGF 121004-7115	CGF 121004-7100
20	CGF 121004-7116	CGF 121004-7101
22	CGF 121004-7117	CGF 121004-7102
24	CGF 121004-7118	CGF 121004-7103
36	CGF 121004-7119	CGF 121004-7104

Types with polyamide rope are preferred types

Wall mounting receptacle
Shell style 0 with endbell and heat shrink boot)

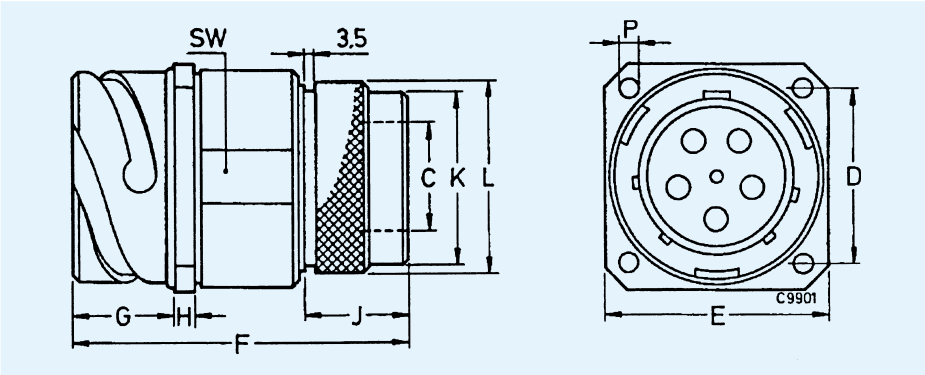

Shell size	Termination mm²	C + 0,2	D	E ±0,1 max	F max	G ±0,25	H ±0,2	J max	K	L ±0,2	SW	P	P Mod 002 H13
16	1,5	10,0	24,6	32,8	63	18,3	4,0	21	21,0	23,5	24	M4	4,2
20	1,5	12,2	29,4	38,3	69	23,2	4,0	21	23,0	25,5	32	M4	4,2
22	2,5/0,75	12,2	31,8	41,3	77	30,0	4,0	21	23,0	25,5	36	M4	4,2
	4,0/0,75	19,0	31,8	41,3	77	30,0	4,0	21	31,5	35,5	36	M4	4,2
24	10,0/0,75	23,0	34,9	45,4	82	30,0	4,0	26	37,5	41,5	41	M4	4,2
36	16,0/0,75	28,0	49,2	64,5	87	30,0	6,0	26	45,0	50,0	57	M5	5,3
	25,0/1,5	34,0	49,2	64,5	87	30,0	6,0	26	48,0	53,0	57	M5	5,3

First-to-mate contact

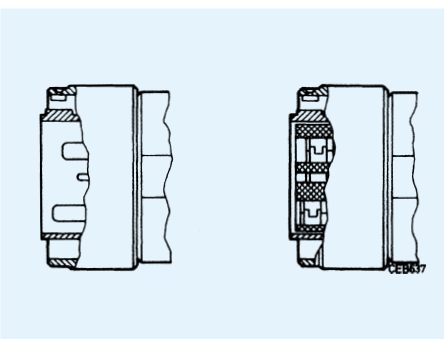

Mounting dimensions

min. hole dia.	# 16	# 20	# 22	# 24	# 36
Front mounting	22,9	29,5	32,7	38,7	54,6
Rear mounting	24,9	34,8	37,8	41,4	60,0
max wall thickness	8,0	8,0	10,0	10,0	10,0

Box mounting receptacle
Shell style 2

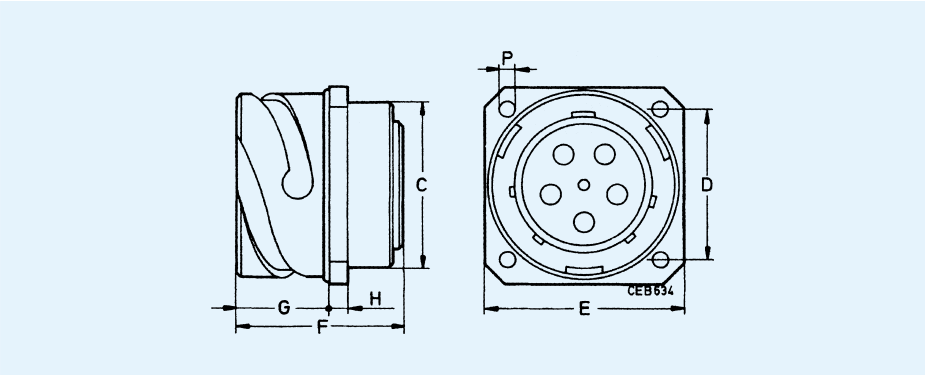

Shell size	C max	D 0,1	E max	F max	G 0,25	H 0,2	P	Mod 002 H13
16	22,4	24,6	32,8	33	18,3	4,0	M4	4,2
20	29,0	29,4	38,3	42	23,2	4,0	M4	4,2
22	32,2	31,8	41,3	44	30,0	4,0	M4	4,2
24	38,2	34,9	45,4	48	30,0	4,0	M4	4,2
36	54,1	49,2	64,5	54	30,0	6,0	M5	5,3

Straight plug
Shell style 6 with endbell for shielding braid and and shrink boot

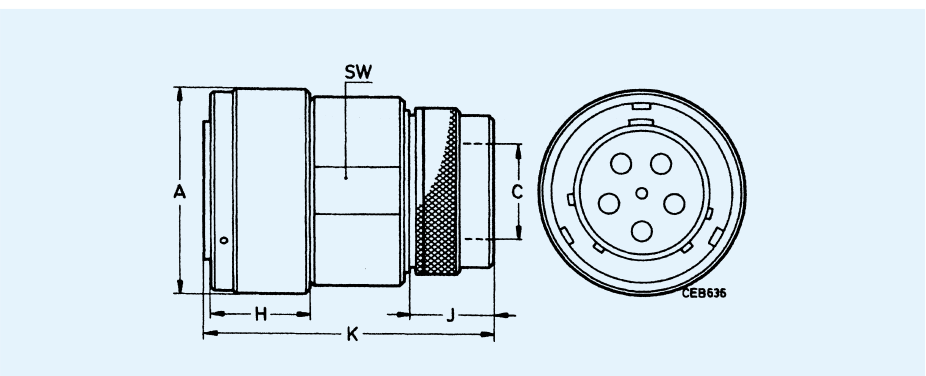

Shell size	Termination mm²	C + 0,2	D	F max	H ±0,2	J max	K	SW	P	Mod 002 H13
16	1,5	10,0	24,6	63	4,0	21	21,0	24	M4	4,2
20	1,5	12,2	29,4	69	4,0	21	23,0	32	M4	4,2
22	2,5/0,75	12,2	31,8	77	4,0	21	23,0	36	M4	4,2
	4,0/0,75	19,0	31,8	77	4,0	21	31,5	36	M4	4,2
24	10,0/0,75	23,0	34,9	82	4,0	26	37,5	41	M4	4,2
36	16,0/0,75	28,0	49,2	87	6,0	26	45,0	57	M5	5,3
	25,0/1,5	34,0	49,2	87	6,0	26	48,0	57	M5	5,3

Tools

Crimping of contacts
0,75 – 4,0 mm² / AWG 16 – 12

Hand crimp tool	M22520/1-01
Locator	TH 452 (P+S)
Hand crimp tool for ground contacts	CCT-CGF-E (P+S)
Pneumatic bench presses and semiautomatic crimp station	upon request

P – Pin contact, S – Socket contact

Contacts 10, 16 und 25 mm²

Electro hydraulic crimp tools	upon request
Hand pump	4601.00000.330
Foot pedal for hand pump	4601.51000.330
High pressure hose	4604.00000.020
Crimp head	4632.00000.601

Hex crimp dies for crimp head

10 mm²	upper part	317-8531-000
	lower part	317-8531-001
16 mm²	upper part	317-8532-000
	lower part	317-8532-001
25 mm²	upper part	317-8643-001
	lower part	317-8643-002

Insertion and Extraction of contacts

	Insertion	Extraction
0,75 – 1,5 mm² / AWG 16		
incl. ground and pilot contacts	CIT-F80-16 or CIT-16	CET-F80-16
Guiding pin	226-1017-000	
2,5 – 4,0 mm² / AWG 12		
incl. ground contact	CIT-F80-12 or CIT-12	CET-F80-12
Guiding pin	226-1018-000	
10 mm² incl. ground contact	CIT-8	CET-8
16 mm² incl. ground contact	CIT-CGF-160/250	CET-4
25 mm²- incl. ground contact	CIT-CGF-160/250	CET-0

THIS NOTE SHOULD BE READ IN CONJUNCTION WITH THE PRODUCT DATA SHEET/CATALOGUE. FAILURE TO OBSERVE THE ADVICE IN THIS INFORMATION SHEET AND THE OPERATING CONDITIONS SPECIFIED IN THE PRODUCT DATA SHEET/ CATALOGUE COULD RESULT IN HAZARDOUS SITUATIONS.

1. MATERIAL CONTENT AND PHYSICAL FORM
   Electrical connectors do not usually contain hazardous materials. They contain conducting and non-conducting materials and can be divided into two groups.

   a) Printed circuit types and low cost audio types which employ all plastic insulators and casings.

   b) Rugged, Fire Barrier and High Reliability types with metal casings and either natural rubber, synthetic rubber, plastic or glass insulating materials.

   Contact materials vary with type of connector and also application and are usually manufactured from either copper, copper alloys, nickel, alumel, chromel or steel. In special applications, other alloys may be specified.

2. FIRE CHARACTERISTICS AND ELECTRIC SHOCK HAZARD
   There is no fire hazard when the connector is correctly wired and used within the specified parameters. Incorrect wiring or assembly of the connector or careless use of metal tools or conductive fluids, or transit damage to any of the component parts may cause electric shock or burns. Live circuits must not be broken by separating mated connectors as this may cause arcing, ionisation and burning.
   Heat dissipation is greater at maximum resistance in a circuit. Hot spots may occur when resistance is raised locally by damage, e.g. cracked or deformed contacts, broken strands of wire. Local overheating may also result from the use of the incorrect application tools or from poor quality soldering or slack screw terminals. Overheating may occur if the ratings in the Product Data Sheet/ Catalogue are exceeded and can cause breakdown of insulation and hence electric shock.
   If heating is allowed to continue it intensifies by further increasing the local resistance through loss of temper of spring contacts, formation of oxide film on contacts and wires, and leakage currents through carbonisation of insulation and tracking paths. Fire can then result in the presence of combustible materials and this may release noxious fumes. Overheating may not be visually apparent. Burns may result from touching overheated components.
3. HANDLING
   Care must be taken to avoid damage to any component parts of electrical connectors during installation and use. Although there are normally no sharp edges, care must be taken when handling certain components to avoid injury to fingers.
   Electrical connectors may be damaged in transit to the customers, and damage may result in creation of hazards. Products should therefore be examined prior to installation/use and rejected if found to be damaged.

4. DISPOSAL
   Incineration of certain materials may release noxious or even toxic fumes.

5. APPLICATION
   Connectors with exposed contacts should not be selected for use on the current supply side of an electrical circuit, because an electric shock could result from touching exposed contacts on an unmated connector. Voltages in excess of 30 V ac or 42.5 V dc are potentially hazardous and care should be taken to ensure that such voltages can not be transmitted in any way to exposed metal parts of the connector body. The connector and wiring should be checked, before making live, to have no damage to metal parts or insulators, no solder blobs, loose strands, conducting lubricants, swarf, or any other undesired conducting particles. Insulation resistance should be checked to make certain that no low resistance joints or spurious conducting path are existing between contacts and exposed metal parts of the connector body. Further the contact resistance of the connectors should be measured within the electrical circuit in order to identify high resistances which result in excessive connector heating.

Always use the correct application tools as specified in the Data Sheet/Catalogue.

Do not permit untrained personnel to wire, assemble or tramper with connectors.

For operation voltage please see appropriate national regulations.

IMPORTANT GENERAL INFORMATION.

1. Air and creepage paths/Operating voltage
   The admissible operating voltages depend on the individual applications and the valid national and other applicable safety regulations.

   For this reason the air and creepage path data are only reference values. Observe reduction of air and creepage paths due to PC board and/or harnessing.

2. Temperature
   All information given are temperature limits. The operation temperature depends on the individual application.

3. Other important information
   Cannon continuously endeavours to improve their products. Therefore, Cannon products may deviate from the description, technical data and shape as shown in this catalogue and data sheets.

4. Harnessing and Assembly Instructions
   If applicable, our special harnessing and/or assembly instruction has to be adhered to. This is provided at request.

ITT Cannon manufactures the highest quality products available in the marketplace; however these products are intended to be used in accordance with the specifications in this catalog. Any use or application that deviates from stated operating specifications is not recommended and may be unsafe. No information and data contained in this catalog shall be construed to create any liability on the part of Cannon. Any new issue of this catalog shall automatically invalidate and supersede any and all previous issues. **A limited warranty applies to Cannon products. Except for obligations assumed by Cannon under this warranty, Cannon shall not be liable for any loss, damage, cost of repairs, incidental or consequential damages of any kind, whether or not based on express or implied warranty, contract, negligence or strict liability arising in connection with the design, manufacture, sale, use or repair of the products.** Product availability, prices and delivery dates are exclusively subject to our respective order confirmation form; the same applies to orders based on development samples delivered. This catalog is not be construed as an offer. It is intended merely as an invitation to make an offer. By this publication, Cannon does not assume responsibility or any liability for any patent infringements or other rights of third parties which may result from its use. Reprinting this catalog is generally permitted, indicating the source. However, Cannon's prior consent must be obtained in all cases.

Cannon is a trademark of ITT Industries, Inc

ITT Cannon Worldwide Facilities

Austria
Afrikanergasse 3
1020 Vienna
FAX: (1) 2160948 PH: (1) 2160947

Benelux
Rue Col. Bourg Str. 105A
1140 Brussels, Belgium
FAX: (02) 7269201 PH: (02) 726 75 94
NL
FAX: 31.35.691.8796 PH: 31.35.691.6855

China
No. 24, 2 Block
Taohuawu New District
Zhenjiang, Jiangsu
P.R.C.
FAX: 86 511 4428616 PH: 86 511 443 3399

Denmark
Park Allé 287 A
2605 Brøndby
FAX: 43 43 58 58 PH: 43 45 52 88

Finland
Virkatie 1
1510 Vantaa
FAX:+358 9 70039188 PH: +358 9 70039180

France
2, Ave Sablons Bouillants, B.P. 133
77109 Meaux
FAX: (1) 64 33 16 82 PH: (1) 60 24 51 51

Germany
Postfach 11 20, 71365 Weinstadt
Cannonstrasse 1, 71384 Weinstadt
FAX: (07151) 699217 PH: (07151) 699-0

Hong Kong
906 New World Office Building
West Wing, 20 Salisbury Road
Tsim Sha Tsui, Kowloon
FAX: (852) 2369-5651 PH: (852) 2732-2720

Italy
Via Panzeri 10
20123 Milano
FAX: (02) 8372036 PH: (02) 581801

Japan
5362-1, 5-chome, Hibarigaoka
Zama-shi, Kanagawa 228
FAX: 0462-57-1680 PH: 0462-57-2010

Korea
620, Changkang Bldg.
#22, Dohwa-dong, Mapo-ku
Seoul
FAX: (02) 717 7330 PH: (02) 702 7111

Spain
Edificio Italia 1a planta
Parque Empresarial San Fernando
San Fernando de Henares
28831 Madrid
FAX: (34) 1 656 15 83 PH: (34) 1 656 03 11

Sweden
Norr Mälarstrand 64
Jaktvarvet 1
11235 Stockholm
FAX: (46) 8 650 0072 PH: (46) 8 650 0071

Switzerland
Herzogenmühle 18
8304 Wallisellen
FAX: (01) 830-3104 PH: (01) 830-3888, 830-3613

United Kingdom
Jays Close, Viables Estate
Basingstoke Hampshire RG22 4BA
FAX: (01256) 323356 PH: (01256) 311200

United States
666 E. Dyer Road
Santa Ana, CA 92705-5612
FAX: 714.628.2142 PH: 714.557.4700

INTERNET
http://www.ittcannon.com

Cannon

ITT Industries
Engineered for life

© 1999 ITT Industries, Inc. Printed in Germany. All Rights Reserved.