CUI Devices is now Same Sky! Learn More



# SERIES: CDS-25148-L100 | DESCRIPTION: SPEAKER

## FEATURES

- micro-speaker
- small footprint
- rated 1.5 W
- wire leads

RoHS

## SPECIFICATIONS

| parameter | conditions/description | min | typ | max | units |
|---|---|---|---|---|---|
| input power | maximum power: IEC-60268-5, filter 60s on/120s off, 10 cycles at room temp | | 1.5 | 2.0 | W |
| impedance | at 1.4 kHz, 1.0 V | 6.8 | 8 | 9.2 | Ω |
| resonant frequency (Fo) | at 1.0 V | 600 | 750 | 900 | Hz |
| frequency response | output SPL ±10 dB | Fo | | 20,000 | Hz |
| sound pressure level | at 1.5 W, 0.1 m ave, at 1.0, 1.2, 1.5, 2.0 kHz<br>at 1.0 W, 1.0 m ave, at 1.0, 1.2, 1.5, 2.0 kHz | 91<br>70 | 94<br>73 | 97<br>76 | dB |
| distortion | at 1.4 kHz, 1.5 W | | | 5 | % |
| buzz, rattle, etc. | must be normal at sine wave between Fo ~ 20 kHz | | 3.46 | | V |
| polarity | cone will move forward with positive dc current to "+" terminal | | | | |
| dimensions | 25.0 x 14.0 x 4.5 | | | | mm |
| magnet | Nd-Fe-B, Ø6.8 x 1.5 | | | | mm |
| material | ABS UL-94 1/16" HB (black) | | | | |
| cone material | cloth | | | | |
| terminal | wire leads | | | | |
| weight | | | 1.72 | | g |
| operating temperature | | -20 | | 55 | °C |
| storage temperature | | -30 | | 70 | °C |
| RoHS | yes | | | | |

Notes: 1. All specifications measured at 5~35°C, humidity at 45~85%, under 86~106kPa pressure, unless otherwise noted.

## PART NUMBER KEY

CDS-25148-L100 **X**

Base Number

Termination Style:
"blank" = wire leads, no connector
1 = JST housing SHR-2V-S-B
2 = JST housing ZHR-2
3 = JST housing PHR-2
4 = JST housing HER-2
6 = Molex housing 51021-0200

## MECHANICAL DRAWING

units: mm
tolerance: ±0.3 mm

wire: UL1571 LF 30 AWG

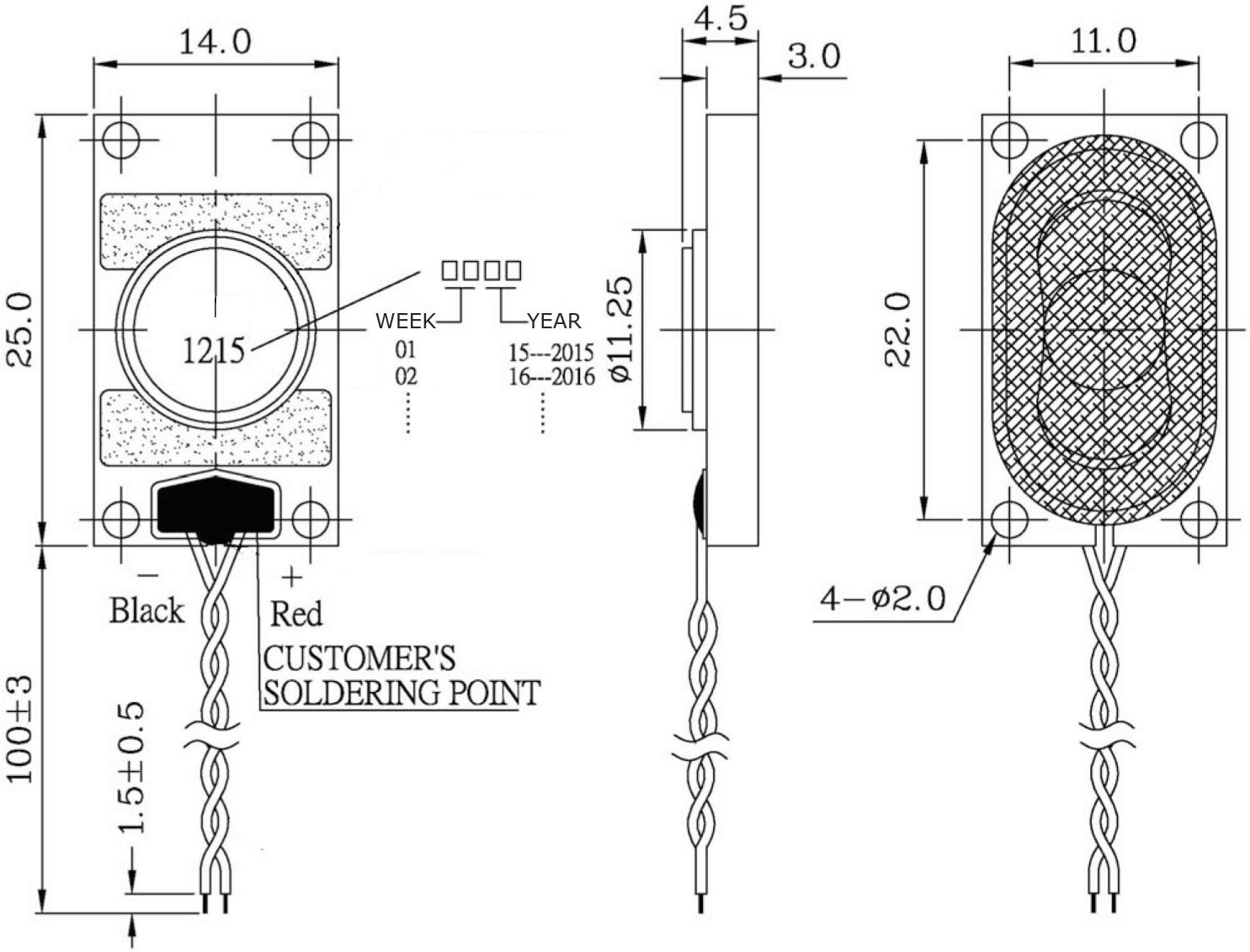

## RESPONSE CURVES

**Frequency Response Curve (1.5 W, 0.1m)**

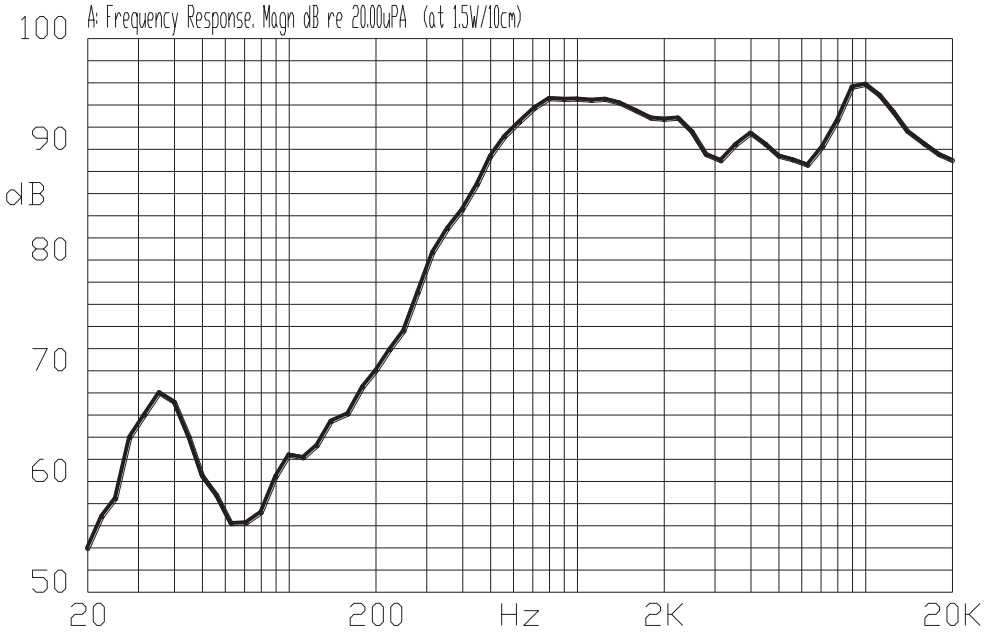


**Frequency Response Curve (1.0 W, 1.0m)**

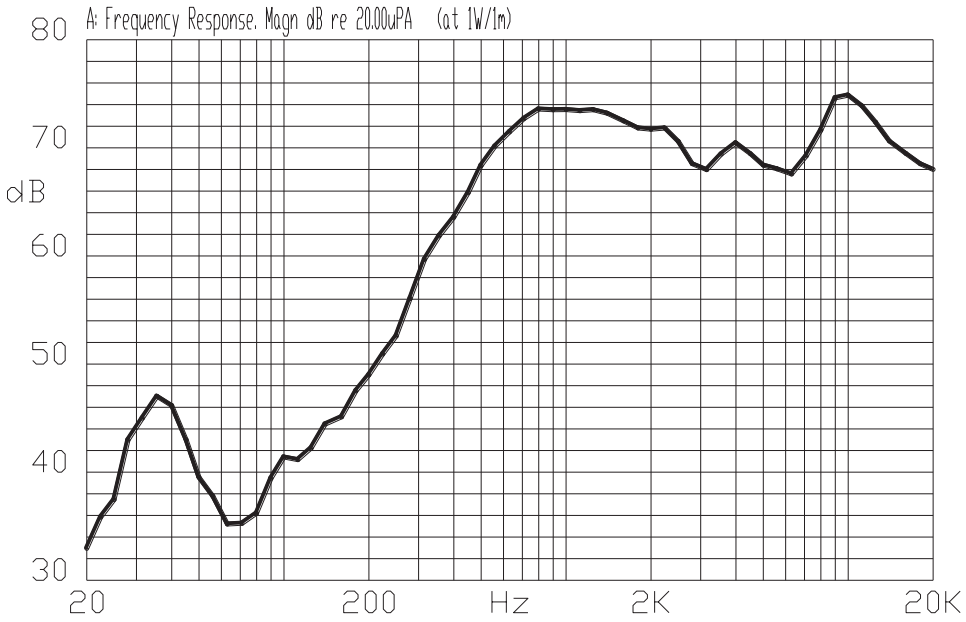


## THIELE-SMALL PARAMETERS

| parameter | conditions/description | typ |
|---|---|---|
| Mechanical Q Factor | Qms | 1.743 |
| Electrical Q Factor | Qes | 10.252 |
| Total Q Factor | Qts | 1.49 |
| Compliance Equivalent Volume | Vas | 0.003 |

Notes: 2. Results represent typical performance in Free Air conditions.

## PACKAGING

units: mm

Tray Size: 425 x 245 x 11 mm
Carton Size: 435 x 280 x 220 mm
Tray QTY: 100 pcs per tray
Carton QTY: 2,000 pcs per carton

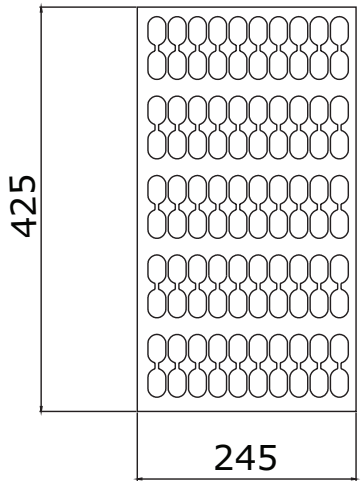


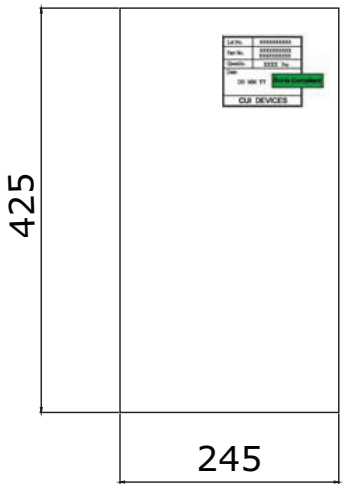


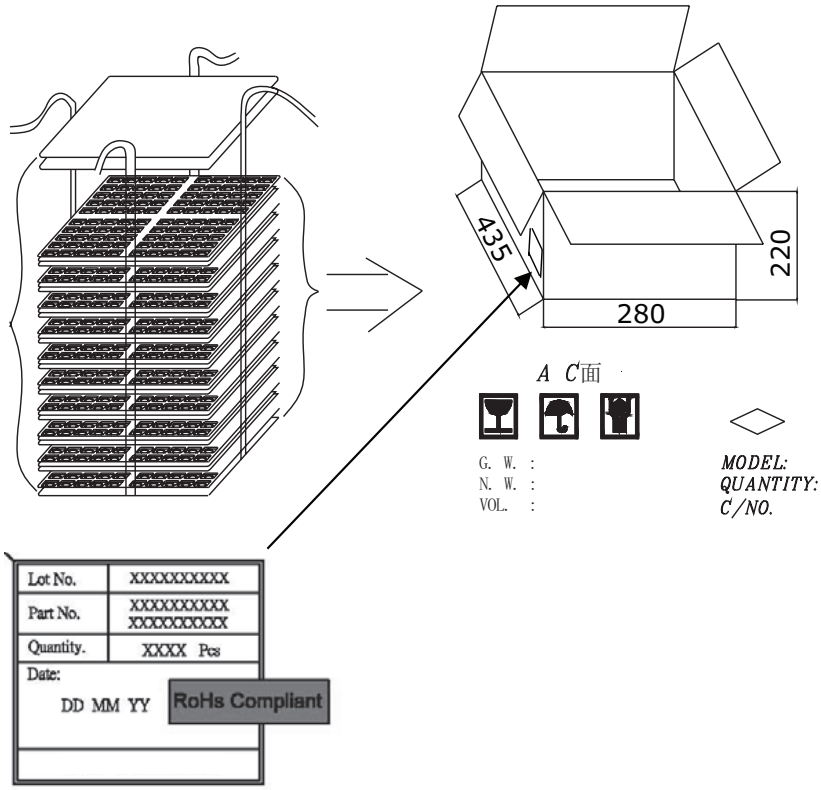

## REVISION HISTORY

| rev. | description | date |
|---|---|---|
| 1.0 | initial release | 04/28/2015 |
| 1.01 | updated datasheet | 07/23/2015 |
| 1.02 | added connector options | 07/15/2016 |
| 1.03 | discontinued JST housing PHR-4 option | 07/01/2019 |
| 1.04 | brand update | 01/23/2020 |
| 1.05 | modified solder pads | 12/16/2020 |
| 1.06 | logo, datasheet style update | 08/05/2022 |
| 1.07 | CUI Devices rebranded to Same Sky | 09/11/2024 |
| 1.08 | added Thiele-Small Parameters | 02/26/2025 |

The revision history provided is for informational purposes only and is believed to be accurate.

Same Sky offers a one (1) year limited warranty. Complete warranty information is listed on our website.

Same Sky reserves the right to make changes to the product at any time without notice. Information provided by Same Sky is believed to be accurate and reliable. However, no responsibility is assumed by Same Sky for its use, nor for any infringements of patents or other rights of third parties which may result from its use.

Same Sky products are not authorized or warranted for use as critical components in equipment that requires an extremely high level of reliability. A critical component is any component of a life support device or system whose failure to perform can be reasonably expected to cause the failure of the life support device or system, or to affect its safety or effectiveness.