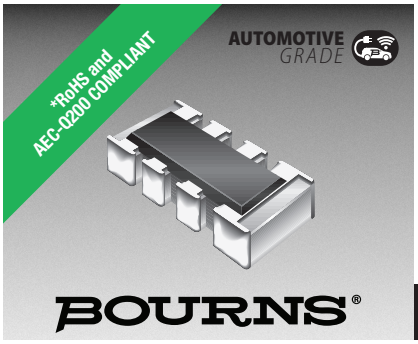

Features

- RoHS compliant*
- Convex terminal style
- 2/4 isolated elements available
- Resistance tolerance: 5 %
- Sulfur-resistant design
- Resistance range: 3 Ω to 1 MΩ and zero jumper
- AEC-Q200 compliant

CAY10A-AS Series – Sulfur-resistant Thick Film Chip Arrays

Electrical Characteristics

Characteristic	Model No.	
	CAY10A-xxxJ2AS	CAY10A-xxxJ4AS
Number of Elements (Isolated)	2	4
Power Rating @ 70 °C per Resistor	63 mW	
Resistor Tolerance	5 %	
Resistor Range & TCR (E24 for 5 %) plus zero ohm jumper	5 %, 10 ~ 1 MΩ ... 200 ppm/°C 5 %, 3 ~ 9, 1 Ω ... 500 ppm/°C	
Maximum Overload Voltage	50 V	
Maximum Working Voltage	25 V	
Operating Temperature Range	-55 to +125 °C	
Rating Temperature	+70 °C	
Packaging	10,000 pieces per reel	
Zero Ohm Jumper Current Rating / Max. Resistance (per element)	1 A / 2.5 A / 50 mΩ max.	

Isolated Circuit

CAY10A-xxxJ2AS

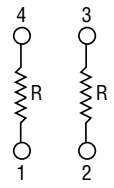

CAY10A-xxxJ4AS

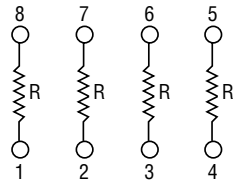

Derating Curve

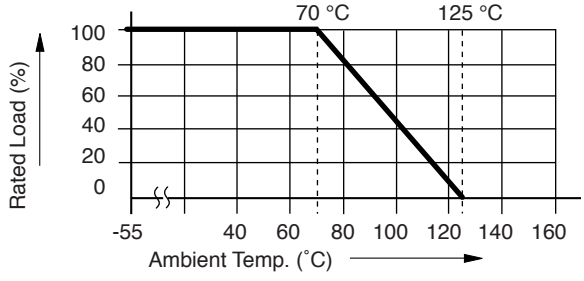

Additional Information

Click these links for more information:

PRODUCT | TECHNICAL LIBRARY | INVENTORY | SAMPLES | CONTACT

Construction

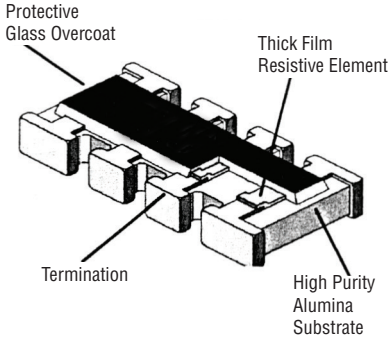

Typical Part Marking

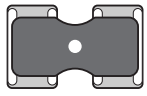

CAY10A-x2AS
No part marking

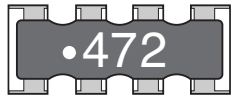

CAY10A-x4AS ±5 % (E24)
3 digits; first two digits are significant, third digit is the number of zeroes to follow.

EX: 472 = 4700 Ω = 4.7K Ω

Storage Conditions

5~35 °C, 40~75 % RH, 2 years

WARNING Cancer and Reproductive Harm
www.P65Warnings.ca.gov

*RoHS Directive 2015/863, Mar 31, 2015 and Annex.
Specifications are subject to change without notice.
Users should verify actual device performance in their specific applications.
The products described herein and this document are subject to specific legal disclaimers as set forth on the last page of this document, and at www.bourns.com/docs/legal/disclaimer.pdf.

Product Dimensions

CAY10A-xxxJ2AS

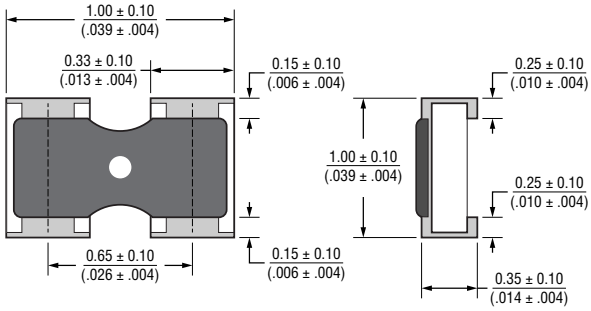

CAY10A-xxxJ4AS

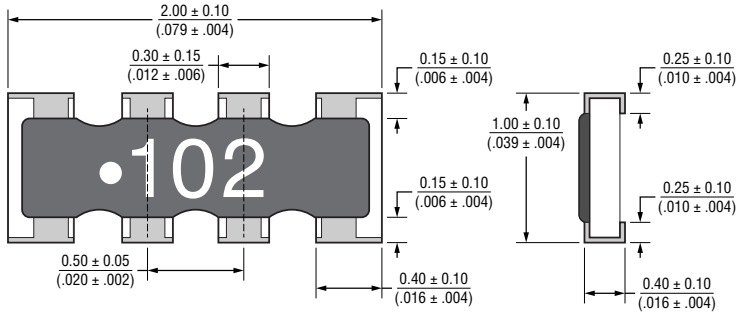

DIMENSIONS: MM / (INCHES)

Recommended Pad Layout

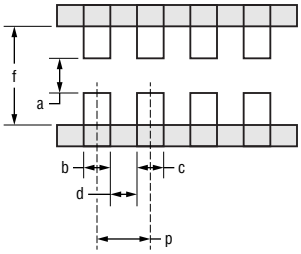

Model	a	b	c	d	p	f
CAY10A-xxxJ2AS	0.5 (.020)	0.35 ~ 0.40 (.014 ~ .016)	0.35 ~ 0.40 (.014 ~ .016)	--	0.65 (.026)	1.4 ~ 1.5 (.055 ~ .059)
CAY10A-xxxJ4AS	0.4 (.016)	0.525 (.021)	0.25 (.010)	0.25 (.010)	--	1.4 (.055)

DIMENSIONS: MM / (INCHES)

Specifications are subject to change without notice.
Users should verify actual device performance in their specific applications.
The products described herein and this document are subject to specific legal disclaimers as set forth on the last page of this document, and at www.bourns.com/docs/legal/disclaimer.pdf.

How to Order

CA Y 10 A - 103 J 4 AS

Series
CA = Chip Array

Type
Y = Convex

Model
10 = 04 Package Width

Feature
A = AEC-Q200 Compliant

Resistance Code
For 5 % Tolerance: (E24)
First two digits are significant, third digit represents the number of zeroes to follow (example: 103 = 1M Ω).

Resistance Tolerance
J = ±5 %

Number of Resistors
2 = 2 Resistors
4 = 4 Resistors

Special Characteristics
AS = Sulfur-resistant, Tin-plated Terminations (RoHS Compliant)

Soldering Profile

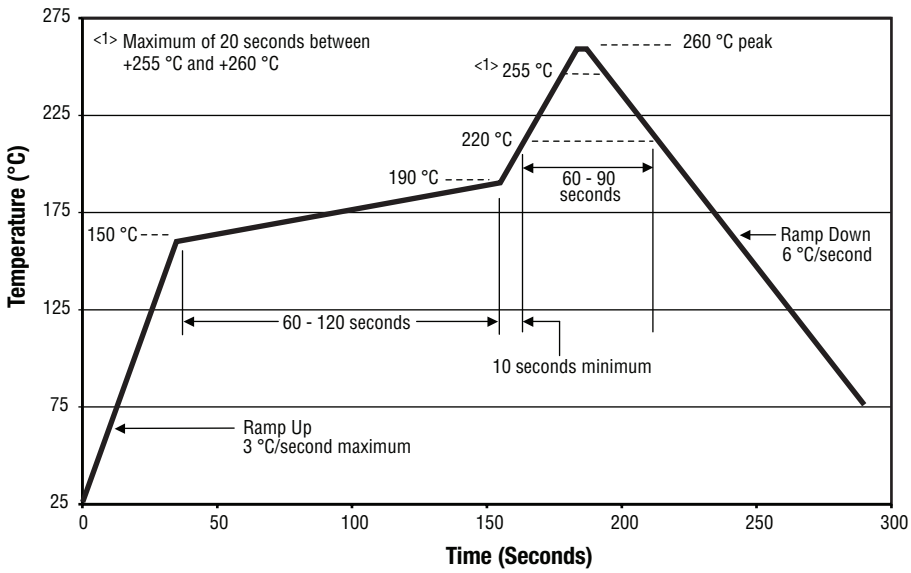

Specifications are subject to change without notice.
Users should verify actual device performance in their specific applications.
The products described herein and this document are subject to specific legal disclaimers as set forth on the last page of this document, and at www.bourns.com/docs/legal/disclaimer.pdf.

Performance Characteristics (AEC-Q200)

Test	Procedure	Test Limits
Short Time Overload	2.5 X rated voltage for 5 sec.	± (2.0 % + 0.1 Ω) 0 Ω : 50 mΩ or less
High Temperature Exposure (Storage)	1000 hrs. @ T=125 °C. Unpowered. Measurement at 24 ±2 hours after test conclusion.	5 %: ± (2.0 % + 0.1 Ω) 0 Ω: 50 mΩ or less
Temperature Cycling	1000 Cycles (-55 °C to +125 °C) Measurement at 24 ±4 hours after test conclusion. 30 min. maximum dwell time at each temperature extreme. 1 min. maximum transition time.	± (2.0 % + 0.1 Ω) 0 Ω : 50 mΩ or less
Moisture Resistance	T=24 hours / Cycle,10 Cycles. Notes: Steps 7a & 7b not required. Unpowered.	± (2.0 % + 0.1 Ω) 0 Ω : 50 mΩ or less
Biased Humidity	1000 hours 85 °C / 85 % RH. Note: Specified conditions: 10 % of operating power (not exceeding max. working voltage). Measurement at 24 ±2 hours after test conclusion.	± (3 % + 0.1 Ω) 0 Ω: 100 mΩ or less
Operational Life	1000 hours T_A=125 °C at 35 % rated power. Measurement at 24 ±4 hours after test conclusion.	± (3 % + 0.1 Ω) 0 Ω: 100 mΩ or less
Mechanical Shock	Wave Form: Tolerance for half sine shock pulse. Peak value is 100 g's. Normal duration (D) is 6 ms.	± (1 % + 0.1 Ω) 0 Ω: 50 mΩ or less
Vibration	5 g's for 20 min., 12 cycles each of 3 orientations. Note: Test from 10-2000 Hz.	± (1 % + 0.1 Ω) 0 Ω: 50 mΩ or less
Resistance to Soldering Heat	Condition B: Immerse the specimens in an eutectic solder at 260 ±5 °C for 10 ±1 s.	± (1 % + 0.1 Ω) 0 Ω: 50 mΩ or less
Thermal Shock	-55 °C / +155 °C. Note: Number of cycles required: 300, Maximum transfer time: 20 seconds, dwell time: 15 minutes. Air to Air.	± (1 % + 0.1 Ω) 0 Ω: 50 mΩ or less
ESD	Verify the voltage setting at 500 V	± (2 % + 0.1 Ω)
Solderability	Method B, aging 4 hours at 155 °C dry heat Lead-free solder bath at 235 ±3 °C Dipping time: 3 ±0.5 seconds	> 95 % area covered with tin
Flammability	V-0 or V-1 are acceptable. Electrical test not required.	V-0 or V-1
Board Flex (Bending)	The duration of the applied forces shall be 60 (+ 5) sec.	± (1 % + 0.1 Ω) 0 Ω: 50 mΩ or less
Terminal Strength (SMD)	Force of 1.8 kg for 60 seconds.	± (1 % + 0.05 Ω) 0 Ω: 50 mΩ or less
Sulfuration Test	Sulfur (Sulfur Vapor) 1000 hours, 105 ±2 °C, unpowered	1 %: ± (1.0 % + 0.05 Ω) 5 %: ± (2.0 % + 0.05 Ω) 0 Ω: 100 mΩ or less

Specifications are subject to change without notice.
Users should verify actual device performance in their specific applications.
The products described herein and this document are subject to specific legal disclaimers as set forth on the last page of this document, and at www.bourns.com/docs/legal/disclaimer.pdf.

Packaging Dimensions

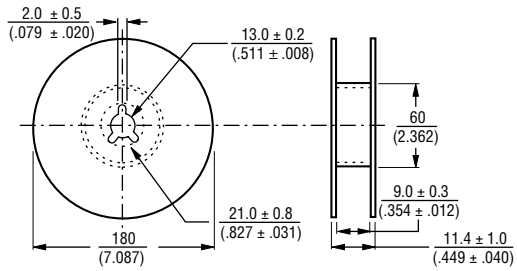

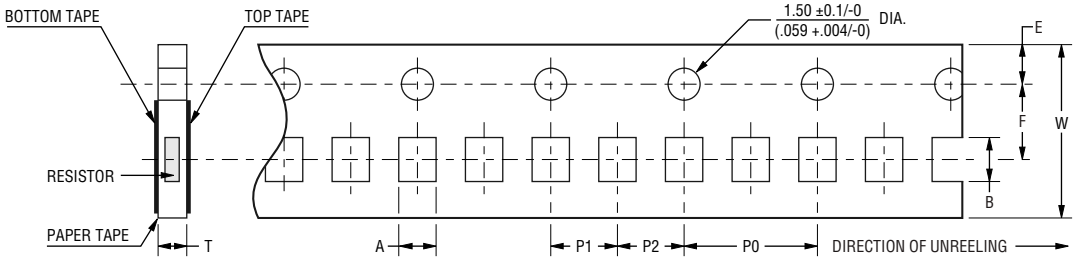

Model	A	B	W	F	E	P1	P2	P0	T
CAY10A-xxxJ2AS	1.2 ± 0.15 (.047 ± .006)	1.2 ± 0.1 (.047 ± .004)	8.0 ± 0.2 (.315 ± .008)	3.50 ± 0.05 (.138 ± .002)	1.75 ± 0.1 (.069 ± .004)	2.0 ± 0.1 (.079 ± .004)	2.0 ± 0.05 (.079 ± .002)	4.0 ± 0.1 (.157 ± .004)	0.45 ± 0.1 (.018 ± .004)
CAY10A-xxxJ4AS		2.2 ± 0.2 (.087 ± .008)							0.64 ± 0.1 (.025 ± .004)

DIMENSIONS: MM (INCHES)

BOURNS®

Asia-Pacific: Tel: +886-2 2562-4117 • Email: asiacus@bourns.com
EMEA: Tel: +36 88 885 877 • Email: eurocus@bourns.com
The Americas: Tel: +1-951 781-5500 • Email: americus@bourns.com
www.bourns.com

REV. 07/23

Specifications are subject to change without notice.
Users should verify actual device performance in their specific applications.
The products described herein and this document are subject to specific legal disclaimers as set forth on the last page of this document, and at www.bourns.com/docs/legal/disclaimer.pdf.

Legal Disclaimer Notice

BOURNS®

This legal disclaimer applies to purchasers and users of Bourns® products manufactured by or on behalf of Bourns, Inc. and its affiliates (collectively, "Bourns").

Unless otherwise expressly indicated in writing, Bourns® products and data sheets relating thereto are subject to change without notice. Users should check for and obtain the latest relevant information and verify that such information is current and complete before placing orders for Bourns® products.

The characteristics and parameters of a Bourns® product set forth in its data sheet are based on laboratory conditions, and statements regarding the suitability of products for certain types of applications are based on Bourns' knowledge of typical requirements in generic applications. The characteristics and parameters of a Bourns® product in a user application may vary from the data sheet characteristics and parameters due to (i) the combination of the Bourns® product with other components in the user's application, or (ii) the environment of the user application itself. The characteristics and parameters of a Bourns® product also can and do vary in different applications and actual performance may vary over time. Users should always verify the actual performance of the Bourns® product in their specific devices and applications, and make their own independent judgments regarding the amount of additional test margin to design into their device or application to compensate for differences between laboratory and real world conditions.

Unless Bourns has explicitly designated an individual Bourns® product as meeting the requirements of a particular industry standard (e.g., ISO/TS 16949) or a particular qualification (e.g., UL listed or recognized), Bourns is not responsible for any failure of an individual Bourns® product to meet the requirements of such industry standard or particular qualification. Users of Bourns® products are responsible for ensuring compliance with safety-related requirements and standards applicable to their devices or applications.

Bourns® products are not recommended, authorized or intended for use in nuclear, lifesaving, life-critical or life-sustaining applications, nor in any other applications where failure or malfunction may result in personal injury, death, or severe property or environmental damage. Unless expressly and specifically approved in writing by two authorized Bourns representatives on a case-by-case basis, use of any Bourns® products in such unauthorized applications might not be safe and thus is at the user's sole risk. Life-critical applications include devices identified by the U.S. Food and Drug Administration as Class III devices and generally equivalent classifications outside of the United States.

Bourns expressly identifies those Bourns® standard products that are suitable for use in automotive applications on such products' data sheets in the section entitled "Applications." Unless expressly and specifically approved in writing by two authorized Bourns representatives on a case-by-case basis, use of any other Bourns® standard products in an automotive application might not be safe and thus is not recommended, authorized or intended and is at the user's sole risk. If Bourns expressly identifies a sub-category of automotive application in the data sheet for its standard products (such as infotainment or lighting), such identification means that Bourns has reviewed its standard product and has determined that if such Bourns® standard product is considered for potential use in automotive applications, it should only be used in such sub-category of automotive applications. Any reference to Bourns® standard product in the data sheet as compliant with the AEC-Q standard or "automotive grade" does not by itself mean that Bourns has approved such product for use in an automotive application.

Bourns® standard products are not tested to comply with United States Federal Aviation Administration standards generally or any other generally equivalent governmental organization standard applicable to products designed or manufactured for use in aircraft or space applications. Bourns expressly identifies Bourns® standard products that are suitable for use in aircraft or space applications on such products' data sheets in the section entitled "Applications." Unless expressly and specifically approved in writing by two authorized Bourns representatives on a case-by-case basis, use of any other Bourns® standard product in an aircraft or space application might not be safe and thus is not recommended, authorized or intended and is at the user's sole risk.

The use and level of testing applicable to Bourns® custom products shall be negotiated on a case-by-case basis by Bourns and the user for which such Bourns® custom products are specially designed. Absent a written agreement between Bourns and the user regarding the use and level of such testing, the above provisions applicable to Bourns® standard products shall also apply to such Bourns® custom products.

Users shall not sell, transfer, export or re-export any Bourns® products or technology for use in activities which involve the design, development, production, use or stockpiling of nuclear, chemical or biological weapons or missiles, nor shall they use Bourns® products or technology in any facility which engages in activities relating to such devices. The foregoing restrictions apply to all uses and applications that violate national or international prohibitions, including embargos or international regulations. Further, Bourns® products and Bourns technology and technical data may not under any circumstance be exported or re-exported to countries subject to international sanctions or embargoes. Bourns® products may not, without prior authorization from Bourns and/or the U.S. Government, be resold, transferred, or re-exported to any party not eligible to receive U.S. commodities, software, and technical data.

To the maximum extent permitted by applicable law, Bourns disclaims (i) any and all liability for special, punitive, consequential, incidental or indirect damages or lost revenues or lost profits, and (ii) any and all implied warranties, including implied warranties of fitness for particular purpose, non-infringement and merchantability.

For your convenience, copies of this Legal Disclaimer Notice with German, Spanish, Japanese, Traditional Chinese and Simplified Chinese bilingual versions are available at:

Web Page: http://www.bourns.com/legal/disclaimers-terms-and-policies

PDF: http://www.bourns.com/docs/Legal/disclaimer.pdf