Radial Leaded Ceramic Disc Capacitors

Safety Standard Recognized, C900, Encapsulated, AC Type, X1 440 VAC/Y2 300 VAC (Industrial Grade)

Overview

KEMET's 900 encapsulated radial leaded ceramic disc capacitors are specifically designed for interference-suppression AC line filtering applications. Having internationally recognized safety certifications, these capacitors are well-suited for applications that require keeping potentially disruptive or damaging line transients and EMI out of susceptible equipment. They are also an ideal solution when needing to suppress line disturbances at the source.

Safety Certified Capacitors are classified as either X and/or Y capacitors. Class X capacitors are primarily used in line-to-line (across-the-line) applications. In this application, there is no danger of electric shock to humans should the capacitor fail, but could result in a risk of fire. The class Y capacitor is primarily used in line-to-ground (line by-pass) applications. In this application, failure of the capacitor could lead to danger of electric shock.

With a working voltage of 440 VAC in line-to-line (Class X) and 300 VAC in line-to-ground (Class Y) applications, these safety capacitors meet the impulse test criteria outlined in IEC Standard 60384. Meeting subclass X1 and Y2 requirements, these devices are certified to withstand impulses up to 4 KV (X1) and 5 KV (Y2) respectively. These encapsulated devices also meet the flame test requirements outlined in UL Standard 94 V–0.

Benefits

- Safety standard recognized (IEC 60384–14)
- Reliable operation up to 125°C
- Class X1/Y2
- 7.5 and 10 mm lead spacing
- Lead (Pb)-free and RoHS Compliant
- Halogen-free
- Capacitance offerings ranging from 10 pF up to 10 nF
- Available capacitance tolerances of ±5%, ±10%, and ±20%
- High reliability
- Preformed (crimped) or straight lead configurations
- Non-polar device, minimizing installation concerns
- Encapsulation meets flammability standard UL 94 V–0

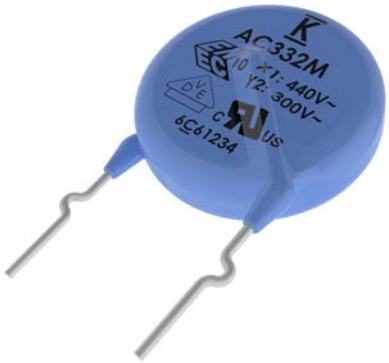

Applications

Typical applications include:
- Line-to-line (Class X) filtering
- Line-to-ground (Class Y) filtering
- Antenna coupling
- Primary and secondary coupling (switching power supplies)
- Line disturbances suppression (motors and motor controls, relays, switching power supplies, and invertors)

© KEMET Electronics Corporation • KEMET Tower • One East Broward Boulevard
Fort Lauderdale, FL 33301 USA • 954-766-2800 • www.kemet.com

Ordering Information

C9	7	1	U	472	M	Z	W	D	A	A	7317
Ceramic Series	Body Diameter	Lead Spacing[1,3]	Spec.	Capacitance Code (pF)	Capacitance Tolerance	Rated Voltage	Dielectric/ Temp. Char.	Design	Lead Configuration[2,3]	Failure Rate	Packaging (C-Spec)
C9 = Ceramic 900 Series	0 = 7.0 mm 1 = 8.0 mm 2 = 9.0 mm 3 = 10.0 mm 4 = 11.0 mm 6 = 13.0 mm 8 = 15.0 mm	7 = 7.5 mm 1 = 10.0 mm	U = Safety	Two significant digits and number of zeroes	J = ±5% K = ±10% M = ±20%	Z = X1 440 VAC /Y2 300 VAC	S = SL Y = Y5P W = Y5U V = Y5V	D = Disc	A = Straight B = Vertical Kink C = Outside Kink	A = N/A	See "Packaging C-Spec Ordering Options Table"

[1] Capacitor body diameter will limit available lead spacing and packaging options. See "Dimensions" and "Product Ordering Codes and Ratings" sections of this document to determine availability.

[2] "Vertical Kink" and "Outside Kink" lead configurations cannot be combined with the bulk/20 mm lead length option (WL20). 20 mm lead length is only available on capacitors with straight leads (lead configuration ordering code "A"). For nonstandard lead length inquiries, please contact KEMET.

[3] Bulk packaging lead length availability is dependent upon "Lead Configuration" and "Lead Spacing." See "Dimensions" section of this document to verify availability of a specific lead length option. For nonstandard lead length inquiries, please contact KEMET.

Packaging C-Spec Ordering Options Table

Packaging Type	Lead Length (mm)[2,3]	Packaging Ordering Code (C-Spec)
Ammo Pack	See Note 5	7317
Bulk Bag	3.0±1.0	WL30
	3.5±1.0	WL35
	4.0±1.0	WL40
	4.5±1.0	WL45
	5.0±1.0	WL50
	20.0 minimum[4]	WL20

[1] Preformed (crimped) lead configurations include "Vertical Kink" and "Outside Kink." See "Lead Configurations" and "Ordering Information" sections of this document for further details.

[2] "Vertical Kink" and "Outside Kink" lead configurations cannot be combined with the bulk/20 mm lead length option (WL20). 20 mm lead length is only available on capacitors with straight leads (lead configuration ordering code "A"). For nonstandard lead length inquiries, please contact KEMET.

[3] For nonstandard lead length inquiries, please contact KEMET.

[4] Lead length of 20.0 mm minimum only available for straight leads.

[5] Lead length for ammo pack packaging is defined by the H and H_0 dimensions in Table 3.

Lead Configurations

Straight	Vertical Kink	Outside Kink
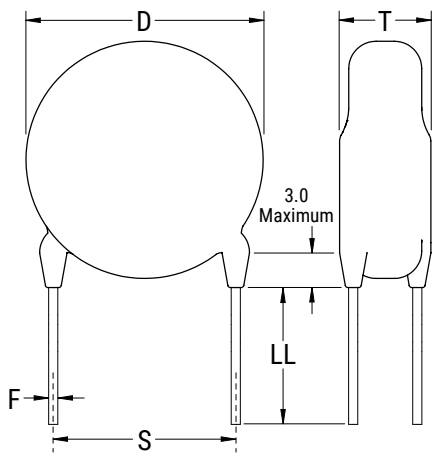	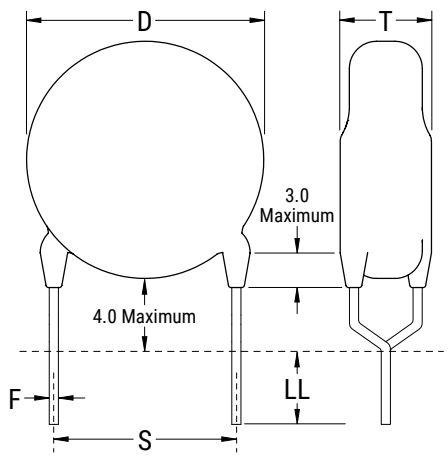	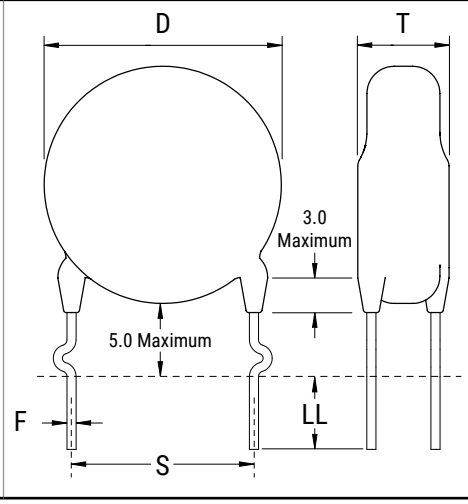

Dimensions – Millimeters

Lead Configuration	Lead Configuration Ordering Code[1]	S	Lead Spacing Tolerance	D	T	e	ØF
		Lead Spacing[2]		Body Diameter[2]	Body Thickness	Lead Meniscus	Lead Diameter
Straight	A	7.5	±1.0	See Table 1 - "Product Ordering Codes and Ratings"		3.0 maximum	0.55±0.1
		10.0	±1.0				
Vertical Kink (Preformed)	B	7.5	±1.0				
		10.0	±1.0				
Outside Kink (Preformed)	C	7.5	±1.0				
		10.0	±1.0				

[1] *Lead Configuration is identified in the 13th character of the ordering code. See "Lead Configuration" and "Ordering Information" sections of this document for further details.*

[2] *Body diameter of capacitor will limit available lead spacing and packaging options. See "Product Ordering Codes and Ratings" sections of this document for further details.*

Approval Standard and Certification No.

Safety Standard	Standard No.	Subclass	Working Voltage	Certificate No.
VDE (ENEC)	IEC 60384–14	X1	440 VAC	40036415
		Y2	300 VAC	
UL CAN/CSA	UL 60384–14 and E60384–14	X1	440 VAC	E356389
		Y2	300 VAC	

These devices are VDE/ENEC and UL recognized for antenna coupling and AC line-to-line (Class X) and line-to-ground (Class Y) applications per IEC60384–14 and UL 60384–14.

Environmental Compliance

These devices are Halogen-free and RoHS Compliant. They meet all requirements set forth by both EU and China RoHS directives.

RoHS HF Halogen Free

General Specifications/Performance Characteristics

Dielectric/Temperature Characteristic	SL	Y5P	Y5U	Y5V
Operating Temperature Range:	−40°C to +125°C			
Capacitance Change with Reference to +25°C and 0 VDC Applied (TCC):	−1,000 ~ +350 ppm/°C	±10%	+20%/−55%	~ +30%/−80%
Dielectric Withstanding Voltage (7.5 and 10 mm Lead Spacing)	2,600 VAC (60 ±5 seconds at 25°C)			
Quality Factor (Q)	30 pF and above: ≥ 1,000 Below 30 pF: ≥ 400 +(20xC)*	See "Dissipation Factor"		
Dissipation Factor (tanδ) at +25°C[1]	See "Quality Factor"	2.50%	2.50%	5.0%
Insulation Resistance (IR) Limit at +25°C	10,000 MΩ Minimum (500 VDC applied for 60 ±5 seconds at 25°C)			

**C = Nominal capacitance*

[1] Capacitance and Dissipation Factor (DF) measured under the following conditions:

SL: 1 MHz ±100 kHz and 1.0 ±0.2 Vrms

X5P, Y5U and Y5V: 1 kHz ±50 Hz and 1.0 ±0.2 Vrms

Note: When measuring capacitance, it is important to ensure the set voltage level is held constant. The HP4284 and Agilent E4980 have a feature known as Automatic Level Control (ALC). The ALC feature should be switched to "ON."

Table 1 – Product Ordering Codes and Ratings

Dielectric/ Temp. Char.	KEMET Part Number	Capacitance	Capacitance Tolerance	Dimensions (mm)			Lead Spacing	
				Body Diameter (Maximum)	Body Thickness (Maximum)	Lead Diameter	Bulk Packaging	Ammo Packaging
SL	C90(1)U100JZSD(2)A(3)	10 pF	±5%	7.0	5.0	0.55±0.1	7.5 mm or 10 mm	
	C90(1)U120JZSD(2)A(3)	12 pF						
	C90(1)U150JZSD(2)A(3)	15 pF						
	C90(1)U180JZSD(2)A(3)	18 pF						
	C90(1)U200JZSD(2)A(3)	20 pF						
	C90(1)U220JZSD(2)A(3)	22 pF						
	C90(1)U240JZSD(2)A(3)	24 pF						
	C90(1)U270JZSD(2)A(3)	27 pF						
	C90(1)U300JZSD(2)A(3)	30 pF						
	C90(1)U330JZSD(2)A(3)	33 pF						
	C90(1)U360JZSD(2)A(3)	36 pF						
	C90(1)U390JZSD(2)A(3)	39 pF						
	C90(1)U470JZSD(2)A(3)	47 pF						
	C90(1)U500JZSD(2)A(3)	50 pF						
	C90(1)U510JZSD(2)A(3)	51 pF						
	C91(1)U560JZSD(2)A(3)	56 pF		8.0				
	C91(1)U620JZSD(2)A(3)	62 pF						
	C91(1)U680JZSD(2)A(3)	68 pF						
	C91(1)U750JZSD(2)A(3)	75 pF						
	C92(1)U820JZSD(2)A(3)	82 pF		9.0				
	C93(1)U101JZSD(2)A(3)	100 pF		10.0				
Y5P	C90(1)U101KZYD(2)A(3)	100 pF	±10%	7.0	5.0	0.55±0.1	7.5 mm or 10 mm	
	C90(1)U151KZYD(2)A(3)	150 pF						
	C90(1)U221KZYD(2)A(3)	220 pF						
	C90(1)U331KZYD(2)A(3)	330 pF						
	C90(1)U471KZYD(2)A(3)	470 pF						
	C91(1)U561KZYD(2)A(3)	560 pF		8.0				
	C91(1)U681KZYD(2)A(3)	680 pF						
	C92(1)U821KZYD(2)A(3)	820 pF		9.0				
	C92(1)U102KZYD(2)A(3)	1,000 pF						
Y5U	C90(1)U102MZWD(2)A(3)	1,000 pF	±20%	7.0	5.0	0.55±0.1	7.5 mm or 10 mm	
	C92(1)U152MZWD(2)A(3)	1,500 pF		9.0				
	C92(1)U222MZWD(2)A(3)	2,200 pF						
	C94(1)U332MZWD(2)A(3)	3,300 pF		11.0				
	C96(1)U392MZWD(2)A(3)	3,900 pF		13.0				
	C96(1)U472MZWD(2)A(3)	4,700 pF						
Y5V	C90(1)U102MZVD(2)A(3)	1,000 pF	±20%	7.0	5.0	0.55±0.1	7.5 mm or 10 mm	
	C90(1)U152MZVD(2)A(3)	1,500 pF						
	C90(1)U222MZVD(2)A(3)	2,200 pF						
	C92(1)U332MZVD(2)A(3)	3,300 pF		9.0				
	C94(1)U392MZVD(2)A(3)	3,900 pF		11.0				
	C94(1)U472MZVD(2)A(3)	4,700 pF						
	C96(1)U682MZVD(2)A(3)	6,800 pF		13.0				
	C98(1)U103MZVD(2)A(3)	10,000 pF		15.0				
	KEMET Part Number	**Capacitance**	**Capacitance Tolerance**	**Body Diameter (Maximum)**	**Body Thickness (Maximum)**	**Lead Diameter**	**Lead Spacing**	

(1) To properly complete ordering code, insert the one-digit numeric code to reflect required lead spacing: (Note that select capacitance values and packaging options may limit lead spacing availability. See table above to verify availability.)
7 = 7.5 mm
1 = 10.0 mm
(2) To properly complete ordering code, insert the one-digit character code to reflect the required lead configuration: (See "Lead Configuration" section of this document, page 2, for further details.)
A = Straight
B = Vertical Kink
C = Outside Kink
(3) To properly complete ordering code, enter the four-digit numeric or alphanumeric "Packaging C-Spec Ordering Code." See "Dimensions" section of this document, page 2, for available options.

Table 2 – Performance & Reliability: Test Methods and Conditions

<table>
<tr><th colspan="2">Item</th><th>Specification</th><th>Test Method</th></tr>
<tr><td colspan="2">Operating Temperature Range</td><td colspan="2">−40°C to +125°C</td></tr>
<tr><td rowspan="2">Dielectric Strength</td><td>Between lead wires</td><td>No failures</td><td>The capacitor shall not be damaged when 2,600 VAC (rms) is applied between the lead wires for 60 seconds.</td></tr>
<tr><td>Body Insulation</td><td>No failures</td><td>The terminals (leads) of the capacitor shall be connected together. A metal foil is tightly wrapped around the body of the capacitor at a distance of about 3 to 4 mm from each terminal. The capacitor is then inserted into a container filled with metal balls approximately 1 mm in diameter. 2,600 VAC (rms) is applied for 60 seconds between the capacitor lead wires and metal balls.
 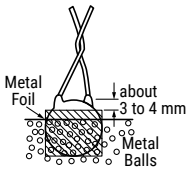 </td></tr>
<tr><td colspan="2">Insulation Resistance (IR)</td><td>10,000 MΩ minimum</td><td>The insulation resistance shall be measured with 500 ±50 VDC applied after 60 ±5 seconds of charging.</td></tr>
<tr><td colspan="2">Capacitance</td><td>Within specified tolerance</td><td rowspan="2">Y5P, Y5U, and Y5V: Capacitance is measured at 1 kHz ±20% and 5 V_{rms} or less. (20±2°C)
SL: Capacitance is measured at 1 MHz ±20% and 1.0 ±0.2 V_{rms} (25°C)</td></tr>
<tr><td colspan="2">Dissipation Factor (DF) or Q</td><td><table><tr><th>Temperature Characteristics</th><th>Specification</th></tr><tr><td>Y5P, Y5U</td><td>DF ≤ 2.5%</td></tr><tr><td>Y5V</td><td>DF ≤ 5.0%</td></tr><tr><td>SL</td><td>≥ 30 pF: Q ≥ 1,000
< 30 pF: Q ≥ 400 +(20 x C)
C = Nominal capacitance</td></tr></table></td></tr>
<tr><td colspan="2">Temperature Characteristics</td><td><table><tr><th>Temperature Characteristics</th><th>Capacitance Change</th></tr><tr><td>Y5P</td><td>Within ±10%</td></tr><tr><td>Y5U</td><td>Within +20%/−55%</td></tr><tr><td>Y5V</td><td>Within ~+30%/−80%</td></tr><tr><td>SL</td><td>−1,000 ~+350 ppm°C (+20°C ~+85°C)</td></tr></table></td><td>A capacitance measurement is made at each step specified:<table><tr><th>Step</th><th>Temperature</th></tr><tr><td>1</td><td>+20±2°C</td></tr><tr><td>2</td><td>−25±2°C</td></tr><tr><td>3</td><td>+20±2°C</td></tr><tr><td>4</td><td>+85±2°C</td></tr><tr><td>5</td><td>+20±2°C</td></tr></table>Pre-treatment:
Capacitor is stored at 85±2°C for 1 hour and then placed at room condition[1] for 24±2 hours before measurement.</td></tr>
<tr><td rowspan="2">Terminal Strength</td><td>Tensile</td><td>Lead wire or capacitor body shall not break.</td><td>With the termination in its normal position, the specimen is held by its body in such a manner that the axis of the termination is vertical; a tensile force of 10 N is applied to the termination in the direction of its axis and acting in a direction away from the body of the specimen.</td></tr>
<tr><td>Bending</td><td>Lead wire or capacitor body shall not break.</td><td>With the termination in its normal position, the specimen is held by its body in such a manner that the axis of the termination is vertical; a mass force of 5 N is then suspended from the end of the termination. The body of the specimen is then inclined within a period of 2 to 3 seconds, through an angle of approximately 90° in the vertical plane and then resumed to its initial position over the same period of time; this operation constitutes one bend. One bend immediately followed by a second bend in the opposite direction.</td></tr>
</table>

[1] *"Room Condition" is defined as follows: Temperature: 15 ~ 35°C/Humidity: 45 ~ 75%/Atmospheric Pressure: 86 ~ 106 kPa.*

Table 2 – Performance & Reliability: Test Methods and Conditions cont.

Item		Specification	Test Method
Solderability		Lead wire should have a uniform coating of solder in the axial direction and over 3/4 of its circumference.	The lead wire of the capacitor is dipped into molten solder for 5±0.5 seconds. The depth of immersion is up to 1.5 mm (+5/−0 mm) from the root of lead wires. Solder Temperature: Lead free solder (Sn-3Ag – 0.5 Cu) 245°C ±5°C.
Soldering Effect (Non-Preheat)	Appearance	No visual defect	As shown in the figure below, the lead wires are immersed in molten solder up to 1.5 mm (+5/−0 mm) from the end of the epoxy meniscus (root of lead wire). Duration/Solder Temperature: 3.5±0.5 seconds/350°C ±10°C or 10±1 seconds/260°C ±5°C 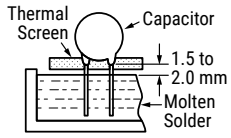 **Pre-treatment:** Capacitor is stored at 85°C ±2°C for 1 hour and then placed at room condition[1] for 24 ±2 hours before initial measurements. **Post-treatment:** Capacitor is stored for 1 to 2 hours at room condition[1].
	IR	1,000 MΩ	
	Dielectric Strength	Per item 1	
	Capacitance	Y5P, Y5U, and Y5V: Within ±10% SL: Within ±2.5% or ±0.25 pF, whichever is larger	
Soldering Effect (Preheat)	Appearance	No visual defect	Capacitor is stored at 120°C +0/−5°C for 60 +0/−5 seconds. Then, as shown in the figure below, the lead wires are immersed in molten solder up to 1.5 mm (+5/-0mm) from the end of the epoxy meniscus (root of lead wire). Duration/Solder Temperature: 7.5 +0/−1 seconds/260°C ±5°C 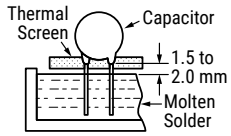 **Pre-treatment:** Capacitor is stored at 85°C ±2°C for 1 hour and then placed at room condition[1] for 24 ±2 hours before initial measurements. **Post-treatment:** Capacitor is stored for 1 to 2 hours at room condition[1].
	IR	1,000 MΩ	
	Dielectric Strength	Per item 1	
	Capacitance	Y5P, Y5U, and Y5V: Within ±10% SL: Within ±2.5% or ±0.25 pF, whichever is larger	
Biased Humidity	Appearance	No visual defect	Steady State Humidity: 90 to 95% humidity at 40°C ±2°C for 500 ±12 hours. **Post Treatment:** Capacitor is stored for 1 to 2 hours at room condition[1]. Load Humidity: 90 to 95% humidity at 40°C ±2°C for 500 ±12 hours with full rated voltage applied. **Post Treatment:** Capacitor is stored for 1 to 2 hours at room condition[1].
	Capacitance	Temperature Characteristics / Capacitance Change Y5P: Within ±10% Y5U: Within ±20% Y5V: Within ±30% SL: Within ±2.5% or ±0.25 pF, whichever is larger	
	DF	Y5P and Y5U: 5.0% maximum Y5V: 7.5% maximum	
	Q	SL: Less than 30 pF: Q ≥ 100 + 10 × C/3 More than 30 pF: Q ≥ 200 C = Nominal capacitance	
	IR	Y5P, Y5V, and Y5U: 3,000 MΩ minimum SL: 1,000 MΩ minimum	
	Dielectric Strength	No failures	

[1] *"Room Condition" is defined as follows: Temperature: 15 ~ 35°C/Humidity: 45 ~ 75%/Atmospheric Pressure: 86 ~ 106 kPa.*

Table 2 – Performance & Reliability: Test Methods and Conditions cont.

Item		Specification	Test Method
High Temperature Life	Appearance	No visual defect	Impulse Voltage: Each individual capacitor is subjected to three 5 kv impulses prior to life testing. 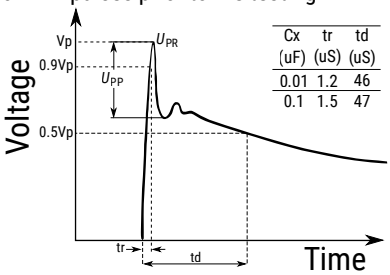 Capacitors are placed in a circulating air oven for a period of 1,000 hours. The air in the oven is maintained at a temperature of 125°C ±2 throughout the test. The capacitors are subjected to AC 510 V_{rms}. Each hour the voltage is increased to 1,000 V_{rms} for 0.1 seconds.
	Capacitance Change	Y5P, Y5V, and Y5U: Within ±20% SL: Within ±3 or ±0.3 pF, whichever is larger.	
	IR	3,000 MΩ minimum SL: 1,000 MΩ minimum	
	Dielectric Strength	No failures	
Flame Test		The capacitor flame extinguishes as follows: Cycle: 1 ~ 4 — Time: 30 seconds maximum Cycle: 5 — Time: 60 seconds maximum	The capacitor is exposed to a flame for 15 seconds and then removed for 15 seconds. This test is repeated for 5 cycles. 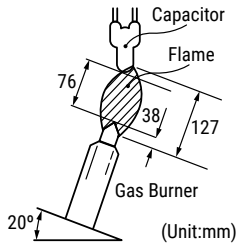
Active Flammability		The cheesecloth should not ignite.	The capacitors are individually wrapped in at least one, but not more than two, complete layers of cheesecloth. They are then subjected to 20 discharges. The interval between successive discharges is 5 seconds. The VAC is maintained for 2 minutes after the last discharge. 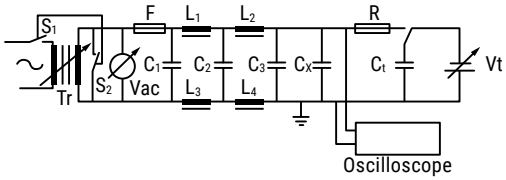

$C_{1,2}$	1 µF ±10%	C_3	0.033 µF ±5% 10 kV
L_{1-4}	1.5 Mh ±20% 16A Rod core choke	Cx	Test capacitor
R	100±2%	V_{AC}	VR ±5%
Ct	3 µF ±5% 10 kV	V_R	Rated Voltage
F	Fuse, Rated 10A	Vt	Voltage applied to Ct

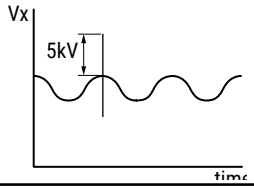

[1] *"Room Condition" is defined as follows: Temperature: 15 ~ 35°C/Humidity: 45 ~ 75%/Atmospheric Pressure: 86 ~ 106 kPa.*

Table 2 – Performance & Reliability: Test Methods and Conditions cont.

<table>
<tr><th colspan="2">Item</th><th>Specification</th><th>Test Method</th></tr>
<tr><td colspan="2">Passive Flammability</td><td>The burning time should not exceed 30 seconds.
The tissue paper should not ignite.</td><td>The capacitor under test is held into a flame and in a position which best promotes burning. Each specimen is exposed to the flame one time.
 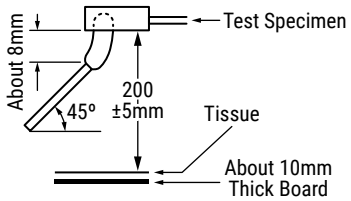

Time of exposure to flame: 30 seconds
Length of flame: 12 ±1 mm
Gas burner length: 35 mm minimum
Inside diameter: 0.5 ±0.1 mm
Outside diameter: 0.9 mm maximum
Gas butane gas purity: 95% minimum</td></tr>
<tr><td rowspan="5">Temperature Cycle</td><td>Appearance</td><td>No visual defect</td><td rowspan="5">The capacitor is subjected to 5 temperature cycles.

Temperature Cycle
<table><tr><th>Step</th><th>Temperature (°C)</th><th>Dwell Time (minutes)</th><th>Transition Time (minutes)</th></tr><tr><td>1</td><td>−40+0/−3</td><td>30</td><td rowspan="4">3</td></tr><tr><td>2</td><td>Room temperature</td><td>3</td></tr><tr><td>3</td><td>125+3/−0</td><td>30</td></tr><tr><td>4</td><td>Room temperature</td><td>3</td></tr></table>
Pre-treatment: Capacitor shall be stored at 85 ±2 for 1 hour then placed at room condition[1] for 24 ±2 hours.
Post-treatment: Capacitor is stored for 1 to 2 hours at room condition[1].</td></tr>
<tr><td>Capacitance</td><td><table><tr><th>Temperature Characteristics</th><th>Capacitance Change</th></tr><tr><td>SL</td><td>Within ±5%</td></tr><tr><td>Y5P</td><td>Within ±10%</td></tr><tr><td>Y5U, Y5V</td><td>Within ±20%</td></tr></table></td></tr>
<tr><td>DF/Q</td><td><table><tr><td>SL</td><td>≥ 30 pF: Q ≥ 350
< 30 pF: Q ≥ 275 +5/2C
C = Nominal capacitance</td></tr><tr><td>Y5P</td><td>DF ≤ 5%</td></tr><tr><td>Y5U, Y5V</td><td>DF ≤ 7.5%</td></tr></table></td></tr>
<tr><td>IR</td><td>3,000 MΩ minimum</td></tr>
<tr><td>Dielectric Strength</td><td>No failures</td></tr>
</table>

[1] *"Room Condition" is defined as follows: Temperature: 15 ~ 35°C/Humidity: 45 ~ 75%/Atmospheric Pressure: 86 ~ 106 kPa.*

Soldering and Mounting Information

Soldering:
When soldering this product to a PCB/PWB, do not exceed the solder heat resistance specification of the capacitor. Subjecting this product to excessive heating could reflow the solder joint between the lead and ceramic element and/or may result in thermal shocks that can crack the ceramic element.

When soldering these capacitors with a soldering iron, it should be performed under the following conditions:
- Temperature of iron-tip: 400ºC maximum
- Soldering iron wattage: 50 W maximum
- Soldering time: 3.5 seconds maximum

Cleaning (ultrasonic cleaning):
To perform ultrasonic cleaning, observe the following conditions:
- Rinse bath capacity: Output of 20 watts per liter or less
- Rinsing time: 5 minute maximum
- Do not vibrate the PCB/PWB directly
- Excessive ultrasonic cleaning may lead to fatigue destruction of the lead wires

Construction

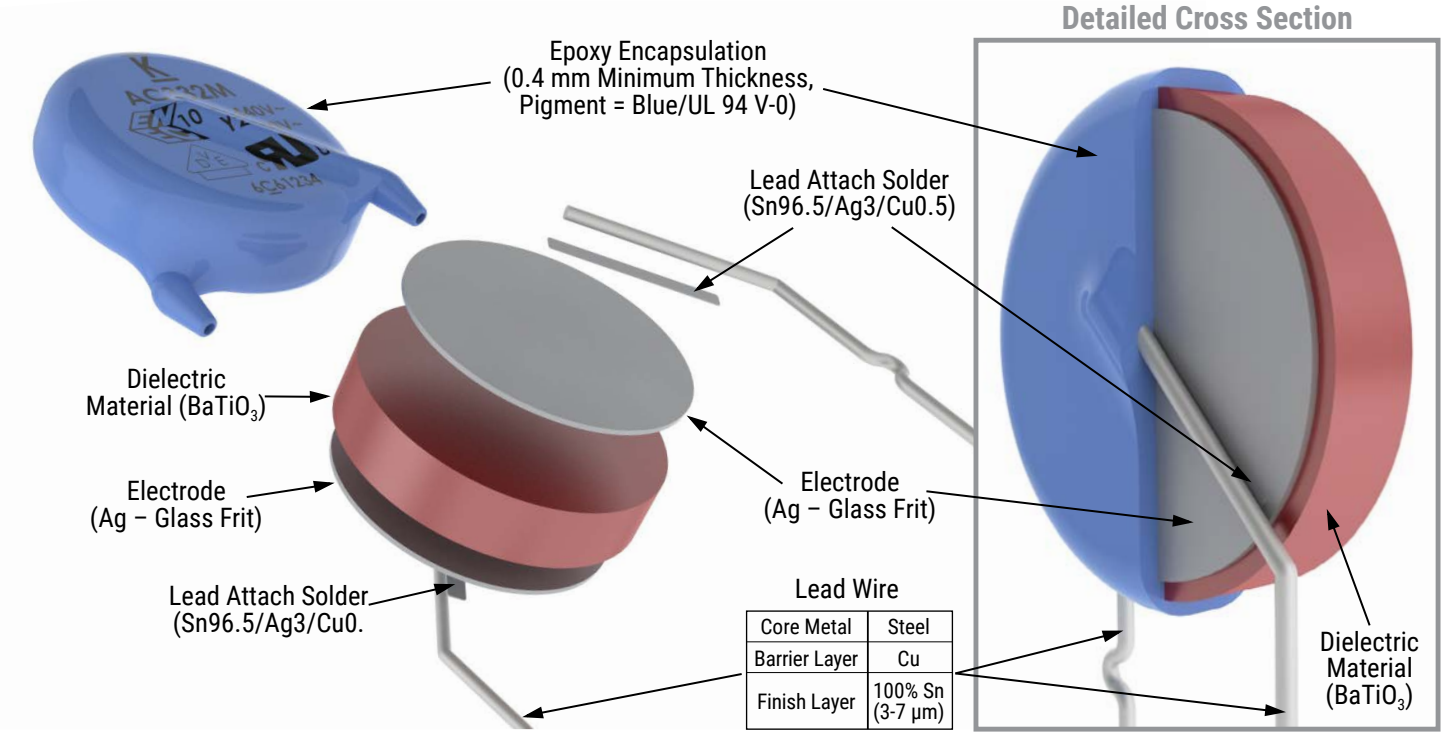

Marking

These capacitors shall be stamped or laser marked with KEMET's trademark, type designation, capacitor class, rated voltage, rated capacitance, and capacitance tolerance codes. In addition, all devices are marked with the recognized approval mark and a date/lot code for traceability. Marking will be supplied either on one side or both sides of the encapsulated capacitor body. All marking shall be legible to allow for clear identification of the component. Marking appears in legible contrast. Illustrated below is an example of the marking format and content. (Two-sided marking is limited to capacitors with body diameters ≤ 8.0 mm)

Single Sided

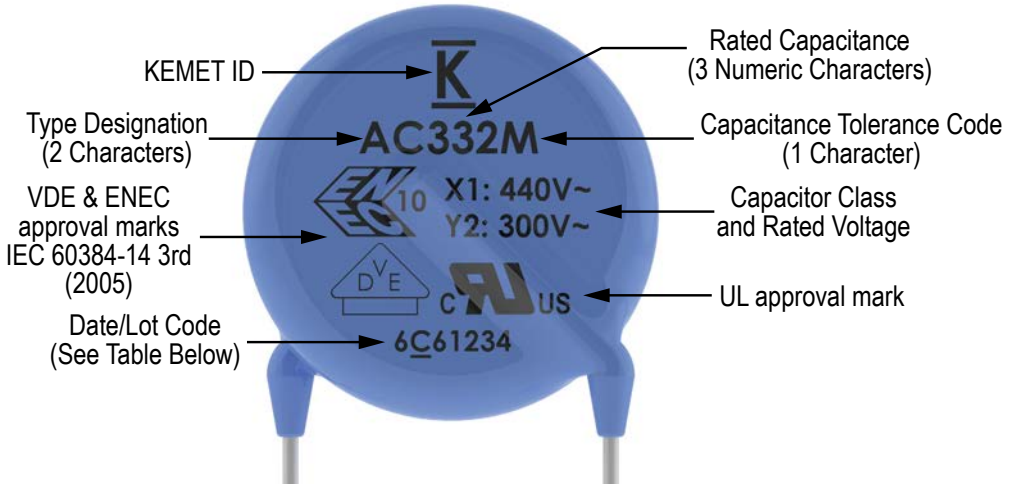

Double Sided

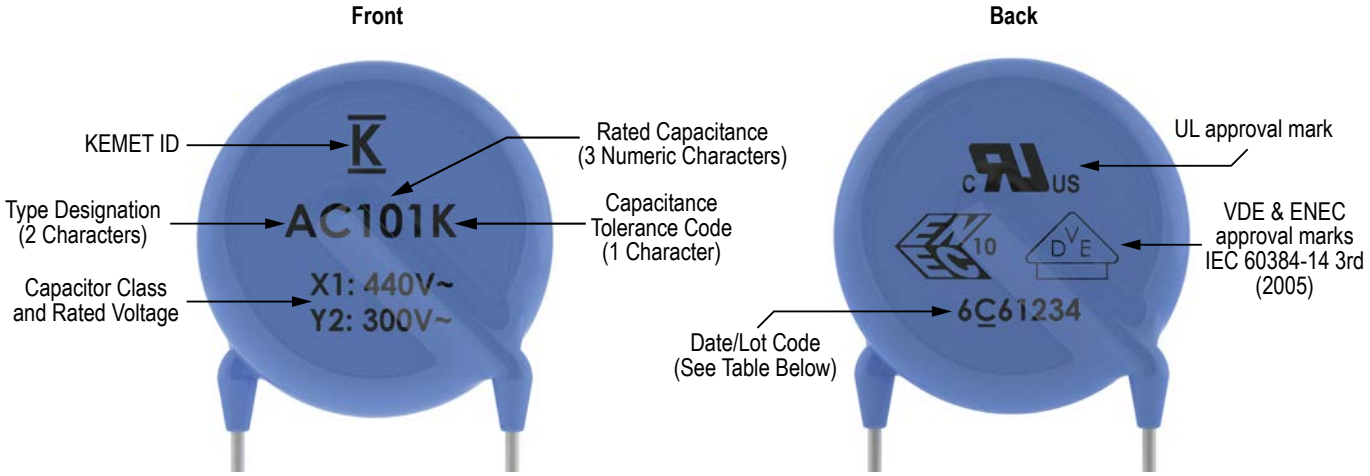

Date/Lot Code Explanation

6	C	6	1234
Last digit of year, e.g., 6 = 2016	Manufacturing Location Code	Manufacturing Month: 1-9 = Jan - Sept A = October N = November D = December	Last 4 digits of lot number

Packaging Quantities

<table>
<tr><th rowspan="3">Capacitor Body Diameter (mm)</th><th rowspan="3">Body Diameter Code[1]</th><th rowspan="3">Bulk Bag (Loose)</th><th colspan="3">Ammo Pack (Carrier Tape)</th></tr>
<tr><th colspan="3">Component pitch on carrier tape[2]</th></tr>
<tr><th>12.7 mm</th><th>15 mm</th><th>25.4 mm</th></tr>
<tr><td>7.0</td><td>0</td><td rowspan="9">500 pieces/bag</td><td colspan="2" rowspan="9">1,000 pieces/box</td><td rowspan="6">1,000 pieces/box</td></tr>
<tr><td>8.0</td><td>1</td></tr>
<tr><td>9.0</td><td>2</td></tr>
<tr><td>10.0</td><td>3</td></tr>
<tr><td>11.0</td><td>4</td></tr>
<tr><td>12.0</td><td>5</td></tr>
<tr><td>13.0</td><td>6</td><td rowspan="3">500 pieces/box</td></tr>
<tr><td>14.0</td><td>7</td></tr>
<tr><td>15.0</td><td>8</td></tr>
</table>

[1] The "Body Diameter Code" is located in the third character position of the ordering code. This code identifies the maximum diameter of the capacitor body in millimeters. For more information regarding the ordering code, see "Ordering Information" section of this document.

[2] For details regarding component pitch on carrier tape, see "Ammo Pack Taping Format" and "Ammo Pack Taping Specifications" sections of this document.

Figure 1 - Ammo Pack Taping Format

5 mm and 7.5 mm Lead Spacing:

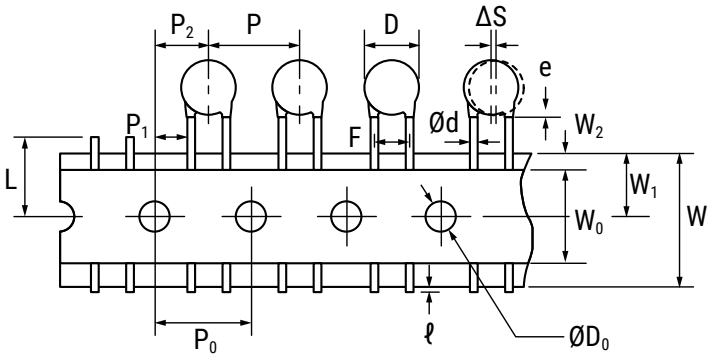

10 mm Lead Spacing:

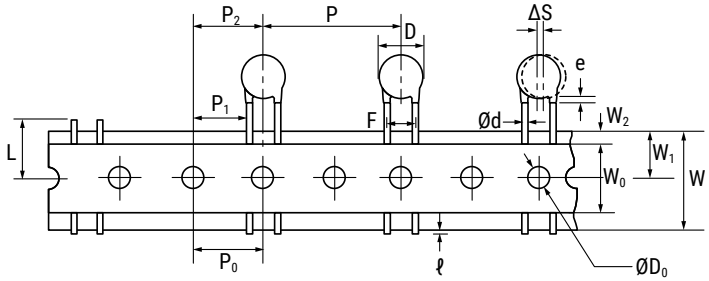

For All Lead Spacing:

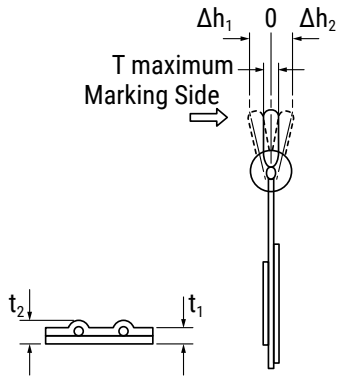

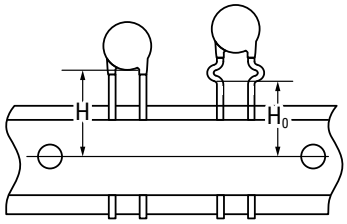

Table 3 – Ammo Pack Taping Specifications

Lead Spacing		5 mm				7.5 mm				10 mm	
Lead Style		Straight		Preformed[1]		Straight		Preformed[1]		Straight	Preformed[1]
Item	Symbol	Dimensions (mm)									
Lead Spacing	F	5.0 ±1.0				7.5 ±1.0				10.0 ±1.0	
Component Pitch	P	12.7 ±1.0	25.4 ±2.0	12.7 ±1.0	25.4 ±2.0	12.7 ±1.0	25.4 ±2.0	12.7 ±1.0	25.4 ±2.0	25.4 ±2.0	
Sprocket Hole Pitch	P_0	12.7 ±0.3				12.7 ±0.3				12.7 ±0.3	
Sprocket Hole Center to Component Center	P_2	6.35 ±1.5	12.7 ±1.5	6.35 ±1.5	12.7 ±1.5	7.5±1.5	12.7 ±1.5	7.5±1.5	12.7 ±1.5	12.7 ±1.5	
Sprocket Hole Center to Lead Center	P_1	3.75±1.0	10.2 ±1.5	3.75±1.0	10.2 ±1.5	3.75±1.0	8.95 ±1.5	3.75±1.0	8.95 ±1.5	7.7 ±1.5	
Body Diameter	D	See "Product Ordering Codes and Ratings" section of this document.									
Component Alignment (side/side)	ΔS	0 ±2.0									
Carrier Tape Width	W	18.0 +1.0/−0.5									
Sprocket Hole Position	W_1	9.0 ±0.5									

[1] *Prefromed (crimped) lead configurations include vertical kink and outside kink. See "Lead Configurations" and "Ordering Information" sections of this document for further details.*
[2] *Also referred to as "lead length" in this document.*

Table 3 – Ammo Pack Taping Specifications cont.

Lead Spacing		5 mm		7.5 mm		10 mm	
Lead Style		Straight	Preformed[1]	Straight	Preformed[1]	Straight	Preformed[1]
Item	Symbol	Dimensions (mm)					
Height to Seating Plane[2] (preformed leads[1])	H_0	N/A	18.0 +2.0/-0	N/A	18.0 +2.0/-0	N/A	18.0 +2.0/-0
Height to Seating Plane[2] (straight leads)	H	20.0 +1.5/-1.0	N/A	20.0 +1.5/-1.0	N/A	20.0 +1.5/-1.0	N/A
Lead Protrusion	ℓ	2.0 maximum					
Diameter of Sprocket Hole	D_0	4.0 ±0.2					
Lead Diameter	φd	0.55 ±0.1					
Carrier Tape Thickness	t_1	0.6 ±0.3					
Total Thickness (Carrier Tape, Hold-Down Tape and Lead)	t_2	1.5 maximum					
Component Alignment (front/back)	Δh_1	2.0 maximum					
	Δh_2						
Cut Out Length	L	11.0 maximum					
Hold-Down Tape Width	W_0	11.0 minimum		11.5 minimum			
Hold-Down Tape Position	W_2	3.0 maximum		1.5 ±1.5			
Coating Extension on Leads (meniscus)	e	3.0 maximum for straight lead; not to exceed the bend for preformed1 lead configurations.					
Body Thickness	T	See "Product Ordering Codes and Ratings" section of this document.					

[1] *Prefromed (crimped) lead configurations include vertical kink and outside kink. See "Lead Configurations" and "Ordering Information" sections of this document for further details.*
[2] *Also referred to as "lead length" in this document.*

Application Notes

Storage and Operating Conditions:
The insulating coating of these devices does not form an air and moisture-tight seal. Avoid exposure to moisture and do not use or store these devices in a corrosive atmosphere, especially where chloride gas, sulfide gas, acid, alkali, salt, or the like are present. Before cleaning, bonding or molding these devices, it is important to verify that your process does not affect product quality and performance. KEMET recommends testing and evaluating the performance of a cleaned, bonded or molded product prior to implementing and/or qualifying any of these processes. Store the capacitors where the temperature and relative humidity do not exceed 40 degrees Centigrade and 70% respectively. For optimum solderability, capacitor stock should be used promptly, preferably within 6 months of receipt.

Working Voltage:
Application voltage (Vp-p or Vo-p) must not exceed the voltage rating of the capacitor. Irregular voltages can be generated for a transient period of time when voltage is initially applied and/or removed from a circuit. It is important to choose a capacitor with a voltage rating greater than or equal to these irregular voltages.

Application Notes cont.

Voltage	DC Voltage	DC+AC Voltage	AC Voltage	Pulse Voltage (1)	Pulse Voltage (2)
Positional Measurement	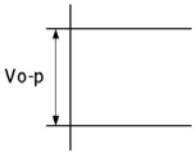	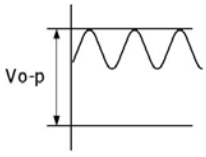	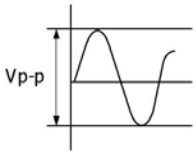	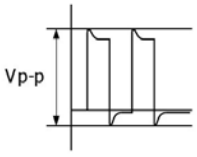	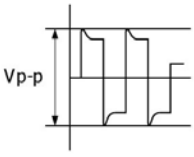

Operating Temperature and Self-Generating Heat:
The surface temperature of a capacitor should be kept below the upper limit of its rated operating temperature range. Be sure to take into account the heat generated by the capacitor itself. When the capacitor is used in a high-frequency current, pulse current or similar current, it may self-generate heat due to dielectric loss. Temperature rise due to self-generated heating should not exceed 20°C (while operated at an atmosphere temperature of 25°C).

Handling - Vibration and Impact:
Do not expose these devices or their leads to excessive shock or vibration during use.

FAILURE TO FOLLOW THE ABOVE CAUTIONS MAY RESULT, WORST CASE, IN A SHORT CIRCUIT AND CAUSE FUMING OR PARTIAL DISPERSION WHEN THE PRODUCT IS USED.

KEMET Electronics Corporation Sales Offices

For a complete list of our global sales offices, please visit www.kemet.com/sales.

Disclaimer

All product specifications, statements, information and data (collectively, the "Information") in this datasheet are subject to change. The customer is responsible for checking and verifying the extent to which the Information contained in this publication is applicable to an order at the time the order is placed. All Information given herein is believed to be accurate and reliable, but it is presented without guarantee, warranty, or responsibility of any kind, expressed or implied.

Statements of suitability for certain applications are based on KEMET Electronics Corporation's ("KEMET") knowledge of typical operating conditions for such applications, but are not intended to constitute – and KEMET specifically disclaims – any warranty concerning suitability for a specific customer application or use. The Information is intended for use only by customers who have the requisite experience and capability to determine the correct products for their application. Any technical advice inferred from this Information or otherwise provided by KEMET with reference to the use of KEMET's products is given gratis, and KEMET assumes no obligation or liability for the advice given or results obtained.

Although KEMET designs and manufactures its products to the most stringent quality and safety standards, given the current state of the art, isolated component failures may still occur. Accordingly, customer applications which require a high degree of reliability or safety should employ suitable designs or other safeguards (such as installation of protective circuitry or redundancies) in order to ensure that the failure of an electrical component does not result in a risk of personal injury or property damage.

Although all product–related warnings, cautions and notes must be observed, the customer should not assume that all safety measures are indicated or that other measures may not be required.

KEMET is a registered trademark of KEMET Electronics Corporation.