D-SUB SERIES

D-SUB connectors
with surface mount termination
CS FR053

Features and Benefits

- According to ESA/ESCC specifications
- Starclip female contacts technology
- Surface mount termination
- Non-Outgassing
- Lightweight connectors

Typical Applications

- Space equipment
- Satellites payloads
- Avionics / Military

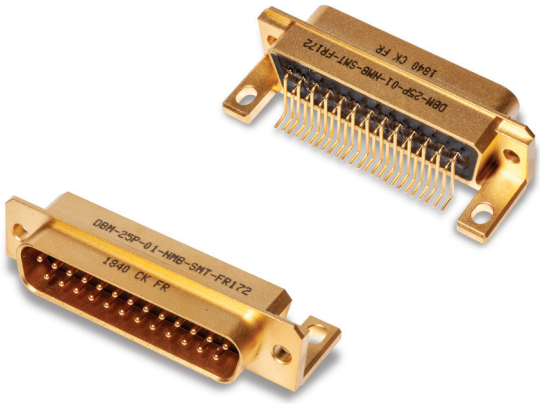

Specification

- High performance D-Sub connectors according to ESA specification, for space applications.
- Compatible with ESCC 3401/001 and 3401/002 D-Sub Connectors, 3401/020 Savers and 3401/022 Accessories.
- Suitable for use in Space, and high performance military/ aerospace applications: Board to Board or Board to Cable applications.
- Starclip female contact technology.
- E, A, B and C Standard Density sizes available

Electrical & Mechanical Characteristics

CHARACTERISTIC	SPECIFICATION
Working Voltage (sea level)	300 Vrms
Rated Current AWG 26	7.5 A
Contact Resistance	5 mΩ (rated current)
Insulation Resistance	5000 MΩ min
Voltage Proof	1250 Vrms /2.0mA (leakage current)
Temperature range	-55/+125 °C

TYPE	MATING FORCE (N MAX)	UNMATING FORCE (N MIN)	WEIGHT MAX(G)
Size E	30	3.5	9
Size A	50	4.5	12
Size B	83	8	16
Size C	123	11	21

Quality Level

- Compliant to CS FR053 C&K specification.
- According to ESA/ESCC code 3401.

Process to use it

- Manual soldering process.
- Hand Soldering temperature max.: 3s at 350°C.

Options

- Possibility to customize the connector to be in line with your demand (Example: Sealing ring cavity, bracket, thread…).
- Get closer to your representative for custom design request.

Packaging

- Individual packaging.
- Traceability associated as per ESA/ESCC specifications.
- Each D-Sub connector is sold and delivered with a antistatic dust cap in individual plastic bag.

HOW TO ORDER

CONNECTOR

Our easy build-a-connector concept allows you to mix and match options to create the D-Sub connector you need. To order, select desired option from each category and place it in the appropriate box.

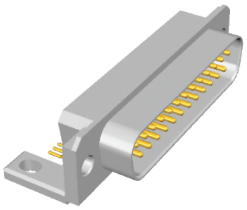

Pin connection with Nickel Plating

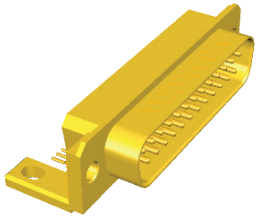

Pin connection with Gold Plating

D B M - 25 P - 01 - NMB - SMT - FR172

Series

Shell Size
E
A
B
C

Insert type: M

Number of contacts
9 (size E)
15 (size A)
25 (size B)
37 (size C)

Type of contact
P Pin (Male)
S Socket (Female)

Variant 01

Magnetism Level
NMB: ≤ 200 Gamma

Srface Mount Termination

Shell Finish:
A174 25.4 µm Ni
FR172 0.7 µm Au over 25.4 µm Ni

MATERIALS & FINISHES

COMPONENT	MATERIAL	FINISH
Shell	Aluminium alloy	**A174:** 25.4 µm electroless Nickel over Copper underlay
		FR172: 0.70 µm Gold over 25.4 µm electroless Nickel
Insulator	Liquid Crystal Polymer	UL 94-V0, Glass-filled, Black Color
Female Contacts	Housing: Copper Alloy Clips: Berylium Copper Alloy	1.27 µm Gold over Copper underlay 1.27 µm Gold over Nickel underlay
Male Contacts	Copper Alloy	1.27 µm Gold over Copper underlay
Encapsulant	Epoxy	
Dust Cap	Polyethylene	Black color, antistatic.

Dimensions shown in: mm
Specifications and dimensions subject to change

CONNECTOR AND LAYOUT DIMENSIONS - SIZE E - 9 PIN CONTACTS

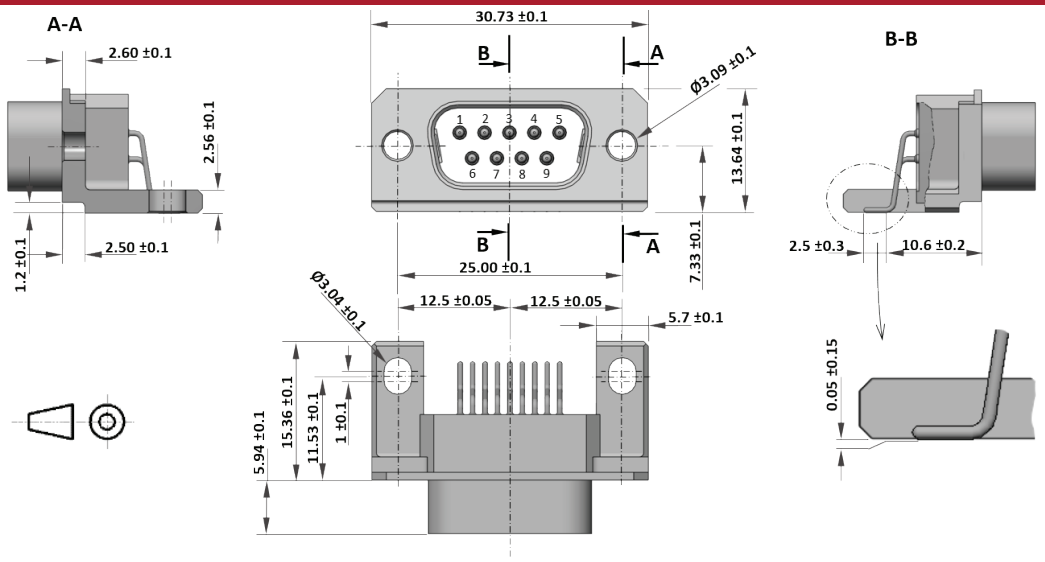

Recommended PC Board Layout:

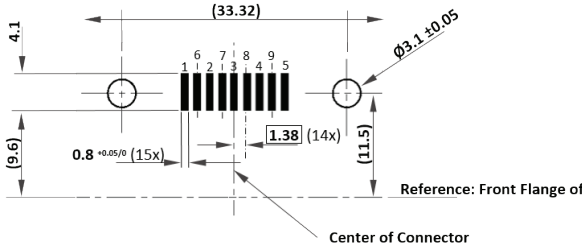

CONNECTOR AND LAYOUT DIMENSIONS - SIZE E - 9 SOCKET CONTACTS

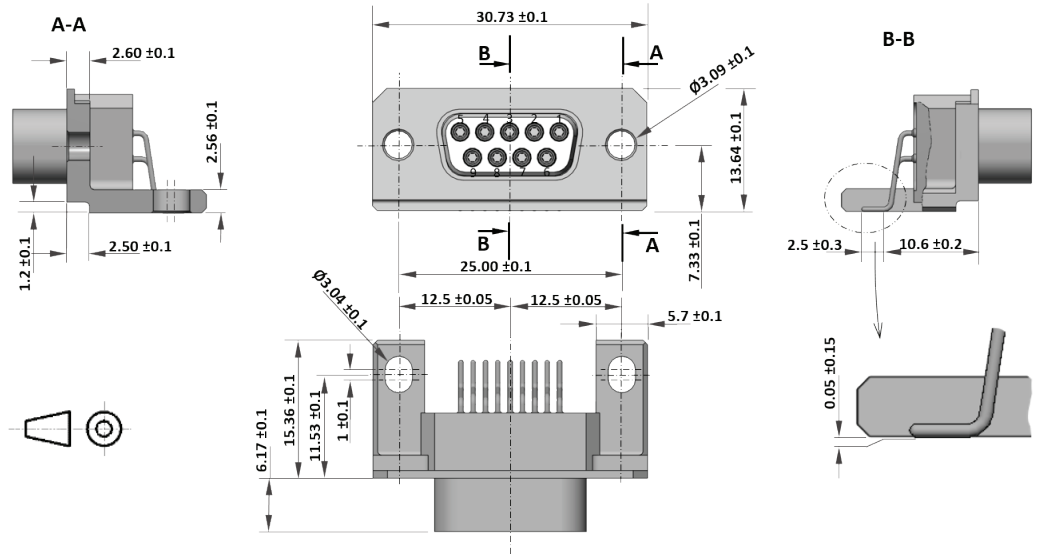

Recommended PC Board Layout:

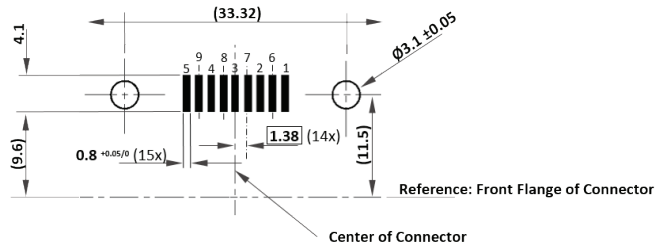

Dimensions shown in: mm
Specifications and dimensions subject to change

CONNECTOR AND LAYOUT DIMENSIONS - SIZE A - 15 PIN CONTACTS

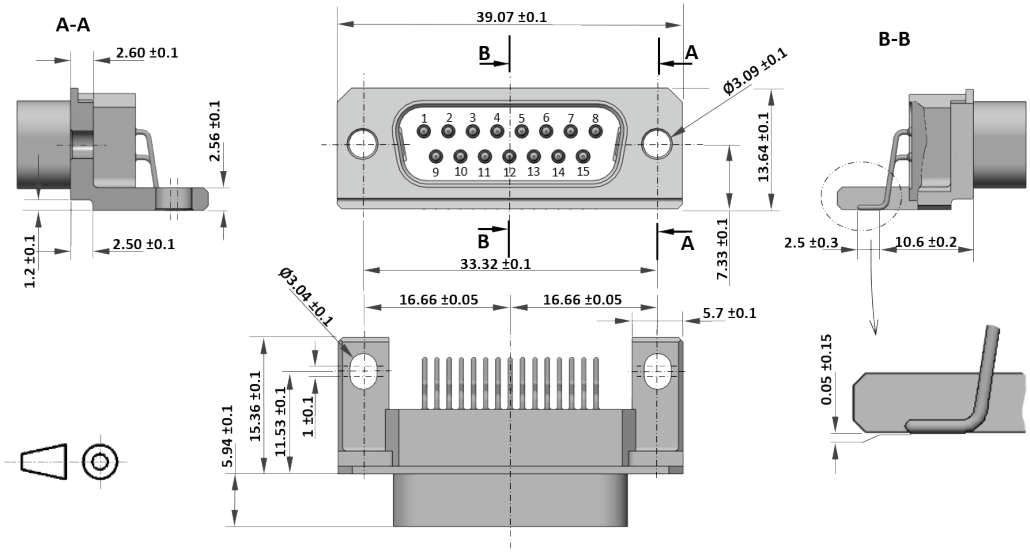

Recommended PC Board Layout:

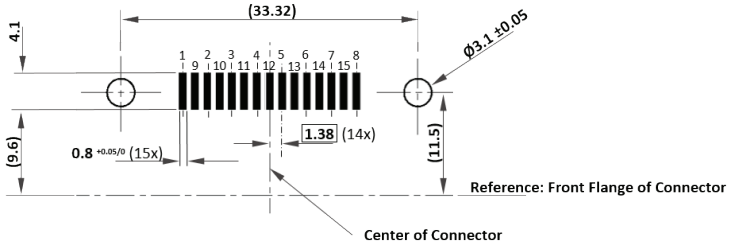

CONNECTOR AND LAYOUT DIMENSIONS - SIZE A - 15 SOCKET CONTACTS

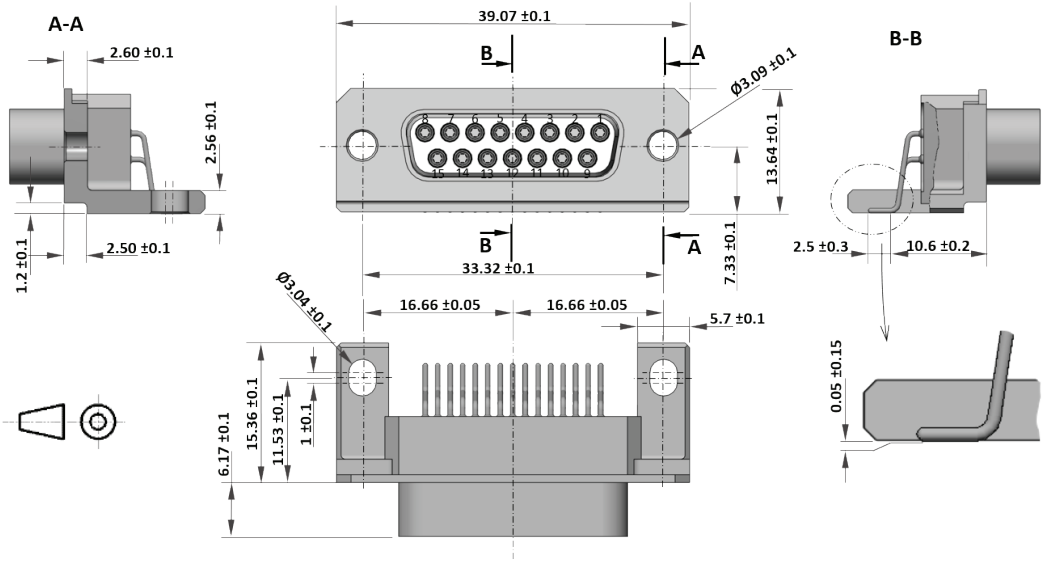

Recommended PC Board Layout:

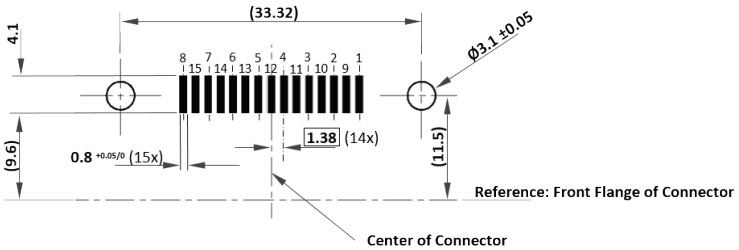

Dimensions shown in: mm
Specifications and dimensions subject to change

CONNECTOR AND LAYOUT DIMENSIONS - SIZE B - 25 PIN CONTACTS

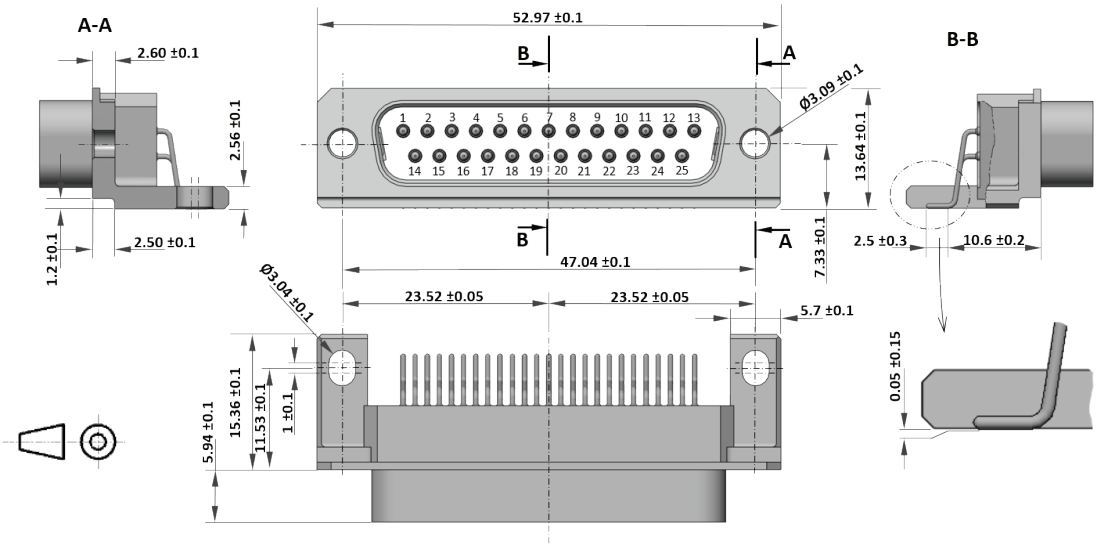

Recommended PC Board Layout:

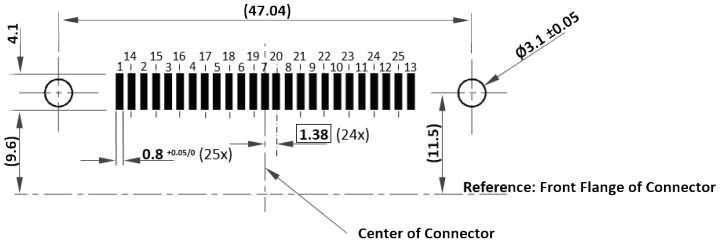

CONNECTOR AND LAYOUT DIMENSIONS - SIZE B - 25 SOCKET CONTACTS

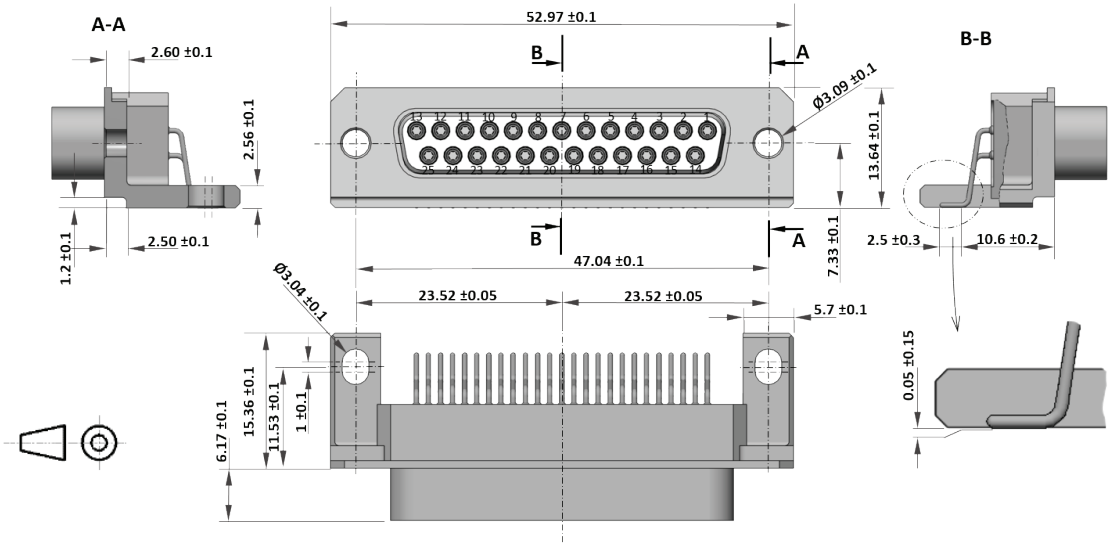

Recommended PC Board Layout:

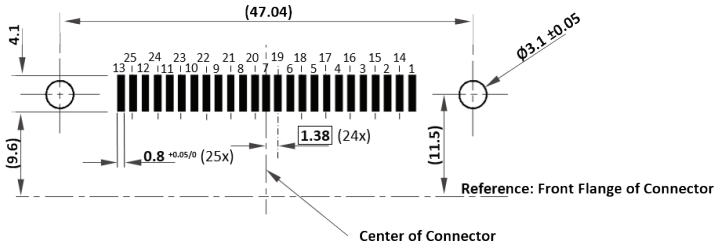

Dimensions shown in: mm
Specifications and dimensions subject to change

CONNECTOR AND LAYOUT DIMENSIONS - SIZE C - 37 PIN CONTACTS

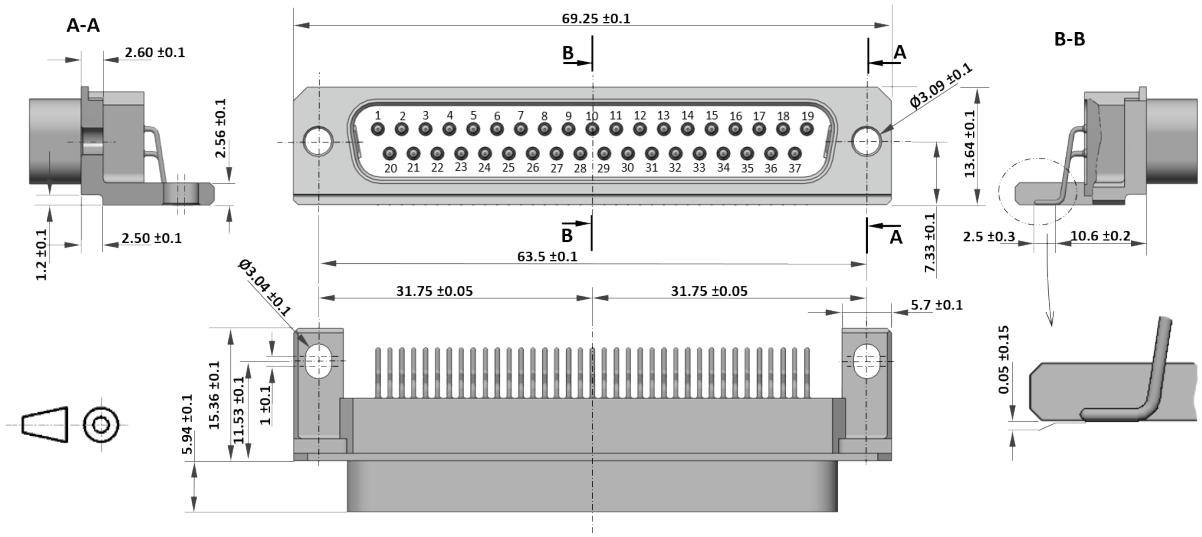

Recommended PC Board Layout:

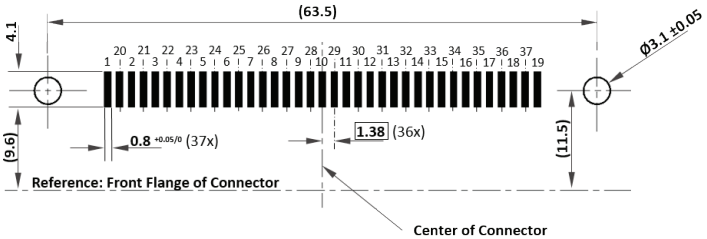

CONNECTOR AND LAYOUT DIMENSIONS - SIZE C - 37 SOCKET CONTACTS

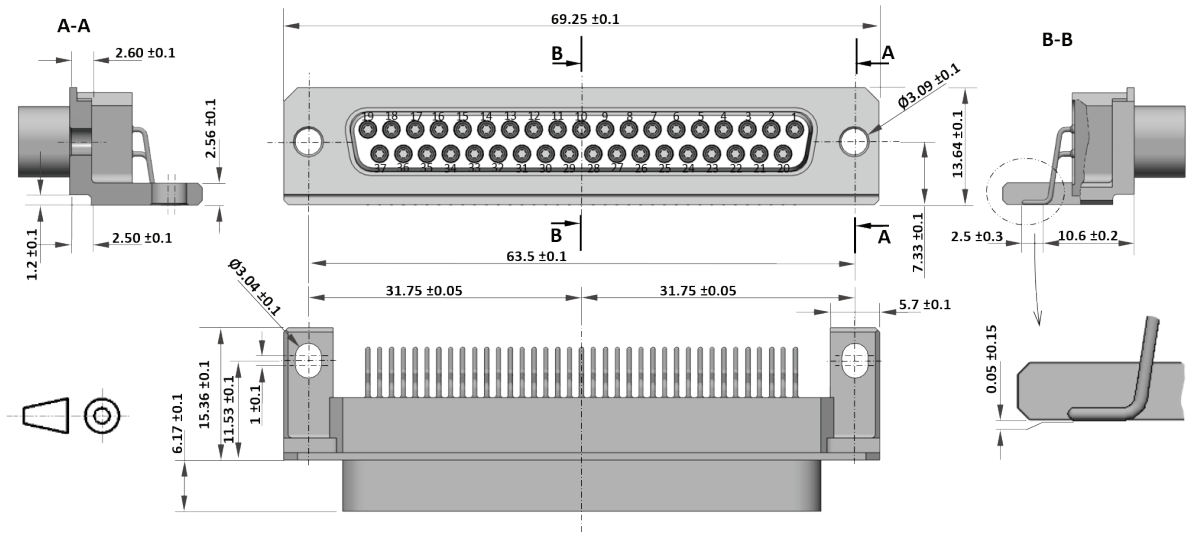

Recommended PC Board Layout:

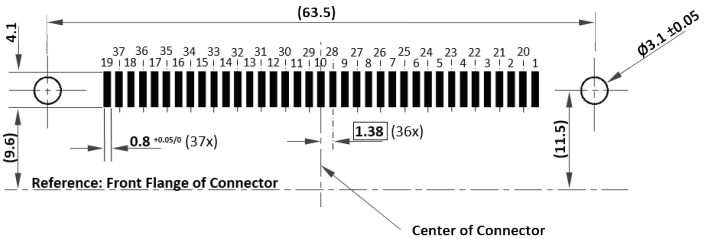

ACCESSORY

FEMALE SCREWLOCK	ESA/ESCC DESCRIPTION	C&K P/N
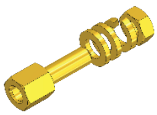 *2 part numbers per connector*	340102201B	C115418-0052C

For the complete range of accessories and details, consult our D-Sub accessories datasheet.

CONNECTORS DESCRIPTION AND C&K PART NUMBERS

SHELL FINISH	CONTACT TYPE	CONNECTOR SIZE	C&K DESCRIPTION	C&K PART NUMBER
Electroless Nickel	Pin	E	DEM-9P-01-NMB-SMT-A174	C115366-2891C
		A	DAM-15P-01-NMB-SMT-A174	C115366-2893C
		B	DBM-25P-01-NMB-SMT-A174	C115366-2895C
		C	DCM-37P-01-NMB-SMT-A174	C115366-2897C
	Socket	E	DEM-9S-01-NMB-SMT-A174	C115366-2899C
		A	DAM-15S-01-NMB-SMT-A174	C115366-2901C
		B	DBM-25S-01-NMB-SMT-A174	C115366-2903C
		C	DCM-37S-01-NMB-SMT-A174	C115366-2905C
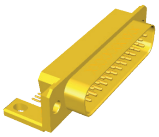 Gold	Pin	E	DEM-9P-01-NMB-SMT-FR172	C115366-2890C
		A	DAM-15P-01-NMB-SMT-FR172	C115366-2892C
		B	DBM-25P-01-NMB-SMT-FR172	C115366-2894C
		C	DCM-37P-01-NMB-SMT-FR172	C115366-2896C
	Socket	E	DEM-9S-01-NMB-SMT-FR172	C115366-2898C
		A	DAM-15S-01-NMB-SMT-FR172	C115366-2900C
		B	DBM-25S-01-NMB-SMT-FR172	C115366-2902C
		C	DCM-37S-01-NMB-SMT-FR172	C115366-2904C

AMERICAS
Tel: +1.617.969.3700

ASIA
Tel: +852.3713.5288

EUROPE
Tel: +33.1.60.24.51.51