C Series

XP Power

1W

DC-HVDC CONVERTER

The C Series is a line of miniature, regulated high voltage power supplies. Each model is programmed from 0 to 100% of rated output via a 0 to +5 volt, DAC-compatible, high-impedance programming input voltage. An externally accessible potentiometer provides adjustable gain trim, allowing for individual calibration of units.

These converters exhibit very low ripple, noise, and EMI/RFI by utilizing a quasi-sinewave oscillator, shielded transformer, excellent filtering techniques and an isolated steel enclosure featuring a separate grounding pin. A proprietary encapsulation process and a custom UL 94 V-0 listed, high-performance formula are used to achieve excellent high voltage and thermal properties. Temperature drift is typically less than 50ppm/°C.

Features

- +12VDC Input (11.5 to 16V)
- Voltage Regulated
- Output Voltages from 100V to 8000V
- 0 to 100% Programmable Output
- High Reliability 2.6MHrs MTBF
- <50ppm/°C Temperature Coefficient
- Shielded Case for Low EMI
- Low Ripple - down to 0.002%
- 3 Year Warranty

Typical Applications

- Photo Multiplier Tube
- Solid State Detectors
- Electrophoresis
- Piezo Devices
- Capacitor Charging
- EO Lenses

Dimensions

C01 - C20:
1.40" x 1.11" x 0.50" (35.6 x 28.2 x 12.7mm)

C25 - C40:
1.75" x 1.11" x 0.50" (44.4 x 28.2 x 12.7mm)

C50 - C60:
2.10" x 1.11" x 0.50" (53.3 x 28.2 x 12.7mm)

C80:
2.50" x 1.25" x 0.60" (63.50 x 31.75 x 15.24mm)

Models & Ratings

Model Number	Output Voltage	Output Current[1]	Regulation		Ripple	Frequency
			Load	Line		
C01	0 to +100V	10.0mA	<0.1%	<0.1%	<0.75%	200-250kHz
C02	0 to +200V	5.0mA	<0.1%	<0.1%	<0.05%	250-350kHz
C02N	0 to -200V	5.0mA	<0.1%	<1.0%	<0.05%	75-150kHz
C03	0 to +300V	3.3mA	<0.1%	<0.1%	<0.03%	200-300kHz
C05	0 to +500V	2.0mA	<0.07%	<0.1%	<0.004%	250-350kHz
C05N	0 to -500V	2.0mA	<0.5%	<0.5%	<0.005%	200-350kHz
C06	0 to +600V	1.67mA	<0.1%	<0.1%	<0.003%	250-300kHz
C06N	0 to -600V	1.67mA	<0.75%	<0.75%	<0.003%	125-300kHz
C10	0 to +1000V	1.0mA	<0.3%	<0.3%	<0.005%	200-250kHz
C10N	0 to -1000V	1.0mA	<0.5%	<0.3%	<0.002%	100-125kHz
C12	0 to +1250V	1.0mA	<0.1%	<0.1%	<0.004%	200-250kHz
C12N	0 to -1250V	1.0mA	<0.175%	<0.1%	<0.003%	100-125kHz
C15	0 to +1500V	0.67mA	<0.1%	<0.1%	<0.002%	100-125kHz
C15N	0 to -1500V	0.67mA	<0.2%	<0.2%	<0.002%	75-100kHz
C20	0 to +2000V	0.5mA	<0.15%	<0.1%	<0.002%	75-100kHz
C20N	0 to -2000V	0.5mA	<0.15%	<0.1%	<0.002%	75-100kHz
C25	0 to +2500V	0.4mA	<0.03%	<0.2%	<0.1%	125-150kHz
C25N	0 to -2500V	0.4mA	<0.5%	<0.2%	<0.2%	125-150kHz
C30	0 to +3000V	0.33mA	<0.03%	<0.05%	<0.1%	75-100kHz
C30N	0 to -3000V	0.33mA	<0.03%	<0.075%	<0.2%	75-100kHz
C40	0 to +4000V	0.25mA	<0.25%	<0.2%	<0.1%	50-125kHz
C40N	0 to -4000V	0.25mA	<0.2%	<0.1%	<0.1%	75-150kHz
C50	0 to +5000V	0.2mA	<0.35%	<0.1%	<0.1%	75-150kHz
C50N	0 to -5000V	0.2mA	<0.25%	<0.1%	<0.1%	125-175kHz
C60	0 to +6000V	0.167mA	<0.25%	<0.1%	<0.1%	125-175kHz
C60N	0 to -6000V	0.167mA	<0.25%	<0.15%	<0.1%	125-175kHz
C80	0 to +8000V	0.125mA	<0.75%	<0.15%	<0.2%	100-150kHz
C80N	0 to -8000V	0.125mA	<0.75%	<0.25%	<0.2%	100-150kHz

Input

Characteristic	Minimum	Typical	Maximum	Units	Notes & Conditions
Input Voltage Range	11.5	13.75	16	VDC	Works with nominal 12V or 15V supply
Input Current, Full Load			250	mA	
Input Current, No Load			100	mA	
Programming Inputs	0		5	VDC	Analog DC Voltage Controls Output 0 to 100%
Input Capacitance		440		µA	Low ESR

Output

Characteristic	Minimum	Typical	Maximum	Units	Notes & Conditions
Output Voltage			8000	VDC	See Models & Ratings table
Output Current			10	mA	See Models & Ratings table
Output Programming	0		100	%	Output Voltage programmable via Analog DC Programming Voltage Input
Setpoint Accuracy		±1		%	@ Max Vpgm, No Load
Gain Adjust		±5		%	Potentiometer, see Signals & Controls
Linearity: Output vs Program			±1	%	15 to 100% Output
Minimum Load	No minimum load required				
Start Up Response			250	msec	At Max Vout, Full Load
Line Regulation	0.05		1.0	%	100% Vpgm, Full Load, (Min to Max Input)
Load Regulation	0.07		0.75	%	100% Vpgm, 13.75Vin, (NL to FL)
Ripple and Noise	0.002		0.75	%	1MHz bandwidth, see Models & Ratings table
Temperature Coefficient		50		ppm/°C	
Stability			100	ppm/hr	After 30 minute warm up

General

Characteristic	Minimum	Typical	Maximum	Units	Notes & Conditions
Isolation: Input to Output	N/A - Input Ground is connected to Output Ground				
Switching Frequency	50		350	kHz	
Construction	Case material is zinc plated steel. Solid vacuum encapsulation, UL 94 V-0 rated				
Mean Time Between Failure	2.6			Mhrs	Per Bellcore TR 332

Notes:

1. Maximum current is available at maximum output voltage.
2. Specifications after 1 hour warm-up, full load, 25°C, unless otherwise noted.
3. Proper thermal management techniques are required to maintain safe case temperature.
4. SET POINT ACCURACY refers to the ability of the unit to accurately deliver the programmed voltage.
5. GAIN ADJUST refers to the ability to alter the gain of the circuit to allow for set-point accuracy error.
6. LINEARITY refers to how much the transfer function can deviate from a straight line in the absence of any set-point error

Environmental

Characteristic	Minimum	Typical	Maximum	Units	Notes & Conditions
Operating Temperature	-10		+60	°C	Case temperature
Storage Temperature	-20		+90	°C	
Cooling	Natural convection				
Humidity			95	%RH	Non-condensing
Thermal Shock Limit			1	°C/10sec	Natural convection

Safety Approvals

Safety Agency	Standard	Notes & Conditions
UL	IEC/UL/CSA/EN 62368	
CE	Meets all applicable directives	
RoHS	RoHS 2 and 3 Directive (2011/65/EU)	Where applicable

Application Notes

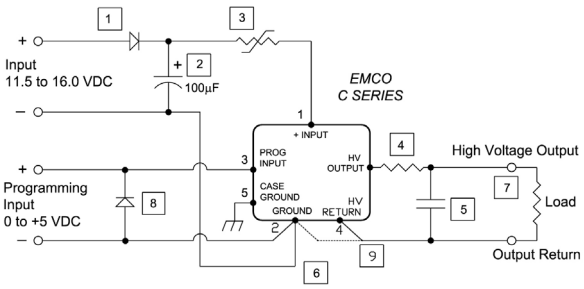

1. Diode provides reverse polarity protection.
2. Capacitor reduces ripple.
3. Resettable fuse (Raychem P/N RXE020,025 or 030) provides indefinite short circuit protection. *Selection depends on model used, load characteristics and operating temperature range.*
4. Series resistance increases arc protection and reduces ripple (when used with an output capacitor).
5. Capacitor reduces ripple.
6. IMPORTANT: Keep Input, Programming and Output return paths separate to eliminate ground loop accuracy errors.
7. Conformal coating recommended on all exposed high voltage conductors.
8. Diode provides protection against negative programming voltage or negative transient spike.
9. Output circuit return to HV return (pin 4) on C50 - C80. On C01-C40, output circuit return to ground (pin 2).

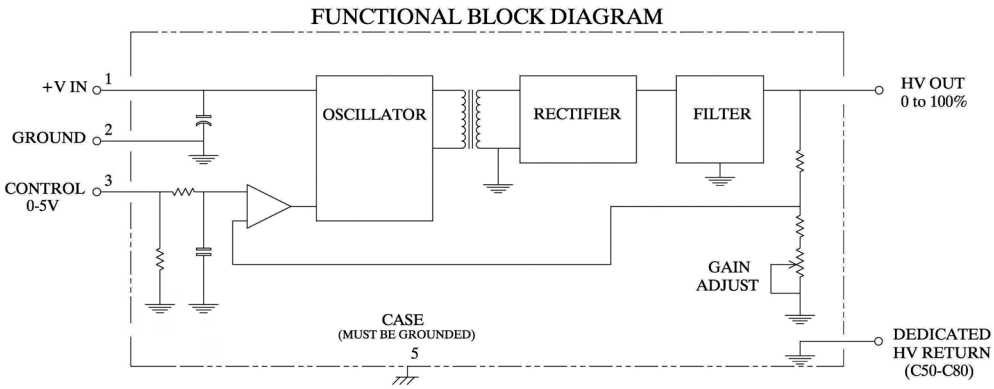

Mechanical Details

C01-C20

Top View

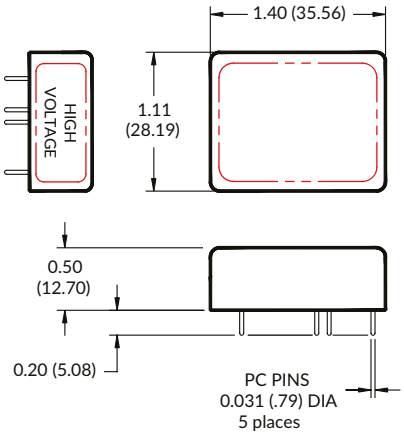

Bottom View

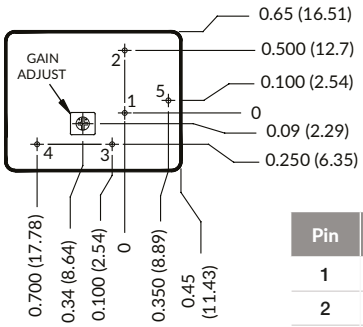

Pin	Function
1	Input (+)
2	Ground
3	Programming Voltage
4	HV Out
5	Case Ground

PCB Layout

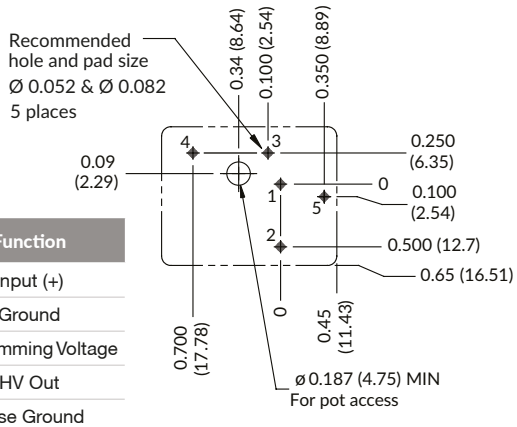

C25-C40

Top View

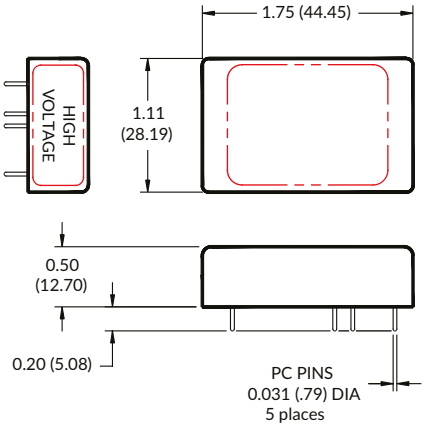

Bottom View

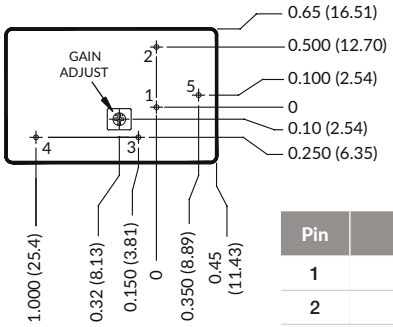

Pin	Function
1	Input (+)
2	Ground
3	Programming Voltage
4	HV Out
5	Case Ground

PCB Layout

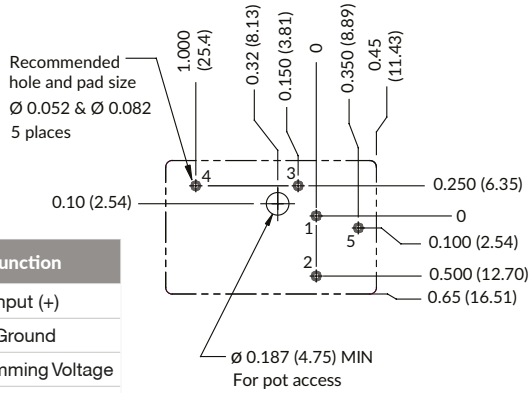

Notes:

1. All dimensions are in inches (mm)
2. Weight: C01-C20: 1.1oz (31g); C25-C40: 1.3oz (36.8g)
3. Tolerance: X.XX±0.02 (0.51)
4. Pin Tolerance: ±0.005 (0.127)

All grounds internally connected except case. Case ground (Pin 5) must be connected to ground, with no more than 50V between case ground (Pin 5) and circuit ground (Pin 2).

Mechanical Details

C50-C60

Top View

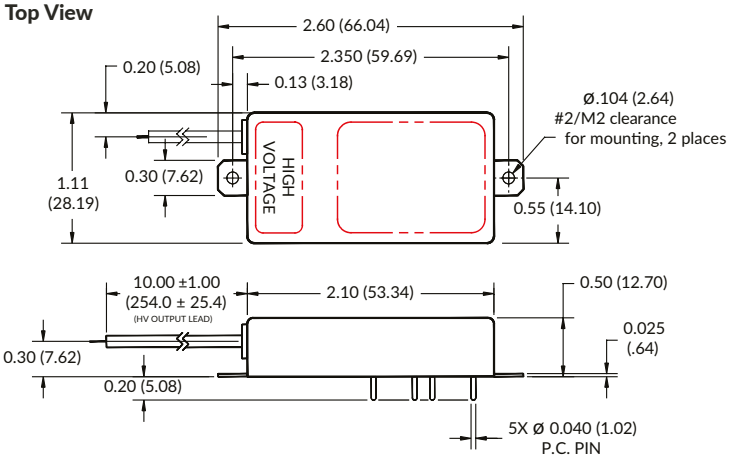

PCB Layout

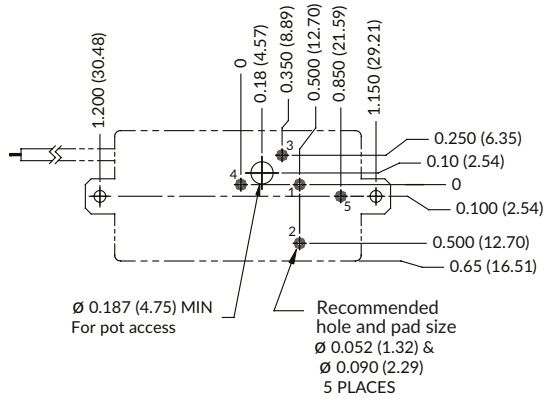

Bottom View

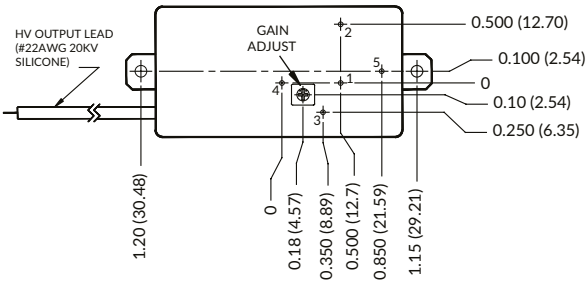

Pin	Function
1	Input (+)
2	Ground
3	Programming Voltage
4	HV Return
5	Case Ground
LEAD	HV Out

Notes:

1. All dimensions are in inches (mm)
2. Weight: C50-C60: 1.8oz (51g)
3. Tolerance: X.XX±0.02 (0.51)
4. Pin Tolerance: ±0.005 (0.127)

All grounds internally connected except case. Case ground (Pin 5) must be connected to ground, with no more than 50V between case ground (Pin 5) and circuit ground (Pin 2).

Mechanical Details

C80

Top View

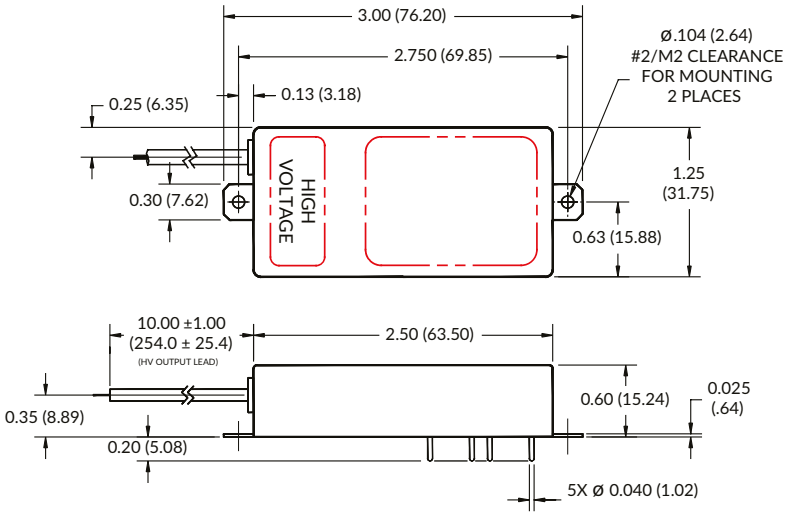

PCB Layout

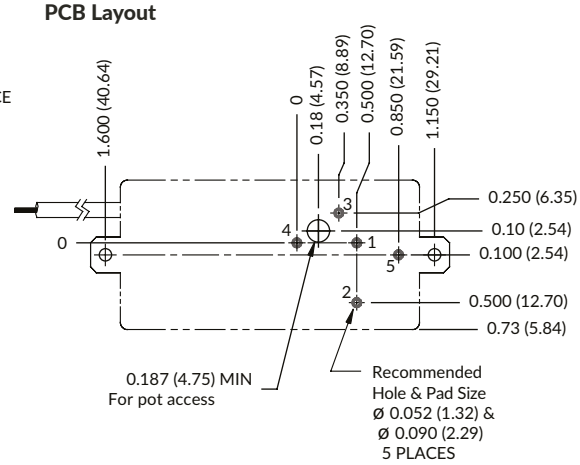

Bottom View

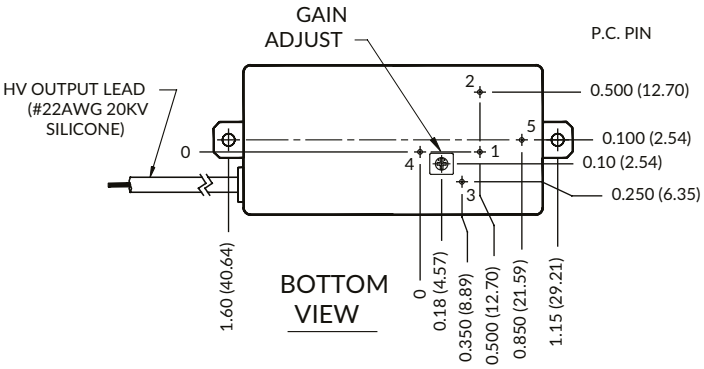

Pin	Function
1	Input (+)
2	Ground
3	Programming Voltage
4	HV Return
5	Case Ground
LEAD	HV Out

Notes:

1. All dimensions are in inches (mm)
2. Weight: C80: 2.0oz (57g).
3. Tolerance: X.XX±0.02 (0.51)
4. Pin Tolerance: ±0.005 (0.127)

All grounds internally connected except case. Case ground (Pin 5) must be connected to ground, with no more than 50V between case ground (Pin 5) and circuit ground (Pin 2).

Mounting Kit

CM3 fits models C25-C40

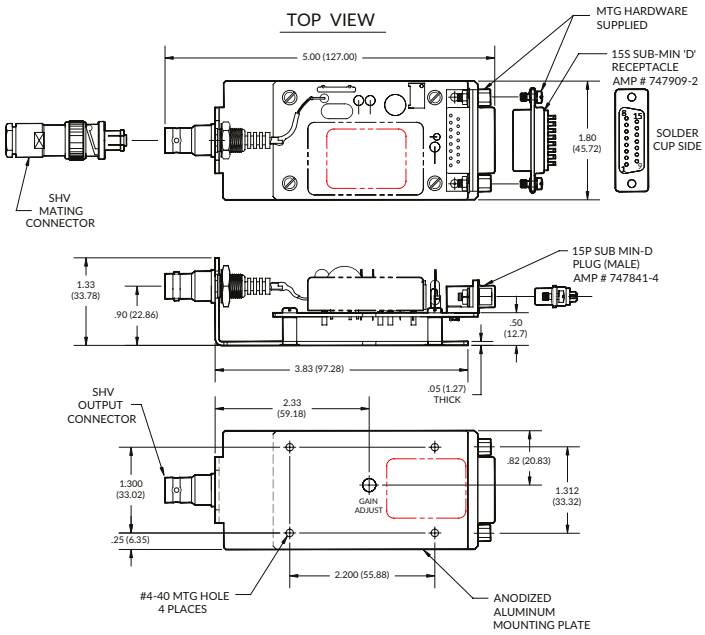

Block Diagram

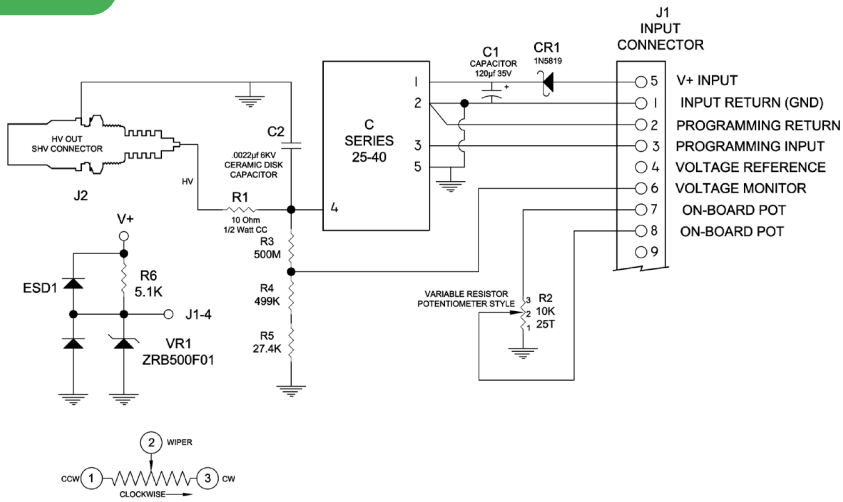

Notes:

Dimensions are in inches (metric equivalents are in parentheses)

Dimensional tolerances: .xx ±0.02 (0.51mm), .xxx ±0.005 (0.127mm)

Product Description

These adapters provide convenient prototyping and evaluation during system development and integration. They allow C Series modules to be mounted to a chassis instead of designed into a PC board. Extra filtering on the input and output improves performance. A schottky diode on the input provides reverse polarity protection. Input connector is via a 15P SUB MIN-D plug (mate supplied) and output is via an SHV style coaxial connector (mate supplied). Please note when ordering a CM3 the C Series is not included and must be ordered separately.

Programming Instructions

Onboard Potentiometer: connect pins 7 to 4 and 8 to 3, turn potentiometer to adjust high voltage.

Or Remote Potentiometer: connect wiper arm to pin 3, other sides to pins 4 and 2.

Or Remote Analog Signal: apply programming voltage to pin 3, return to pin 2.

Mounting Kit

CM4 fits models C50-C80

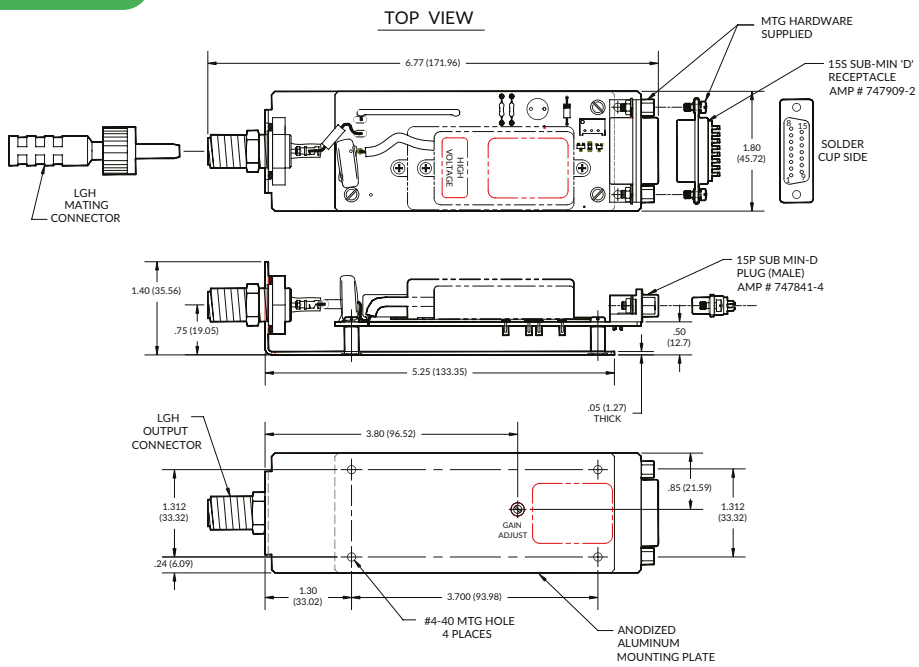

Block Diagram

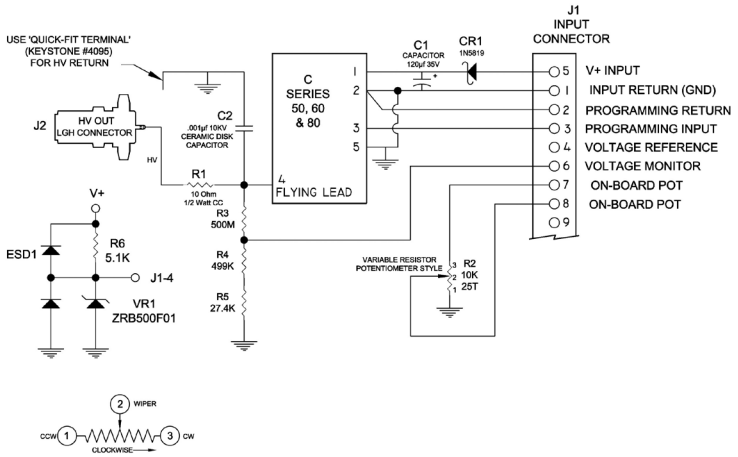

Notes:

Dimensions are in inches (metric equivalents are in parentheses)

Dimensional tolerances: .xx +/- 0.02 (0.51mm)
.xxx +/- 0.005 (0.127mm)

Product Description

These adapters provide convenient prototyping and evaluation during system development and integration. They allow C Series modules to be mounted to a chassis instead of designed into a PC board. Extra filtering on the input and output improves performance. A schottky diode on the input provides reverse polarity protection. Input connector is via a 15P SUB MIN-D plug (mate supplied) and output is via an SHV style coaxial connector (mate supplied).Please note when ordering a CM3 the C Series is not included and must be ordered separately.

Programming Instructions

Onboard Potentiometer: connect pins 7 to 4 and 8 to 3, turn potentiometer to adjust high voltage.
Or Remote Potentiometer: connect wiper arm to pin 3, other sides to pins 4 and 2.
Or Remote Analog Signal: apply programming voltage to pin 3, return to pin 2.