RoHS

For board-to-FPC

Narrow Pitch Connectors (0.35mm pitch)

S35

Excellent contact reliability and mating in a super miniature size (width 1.7 mm)

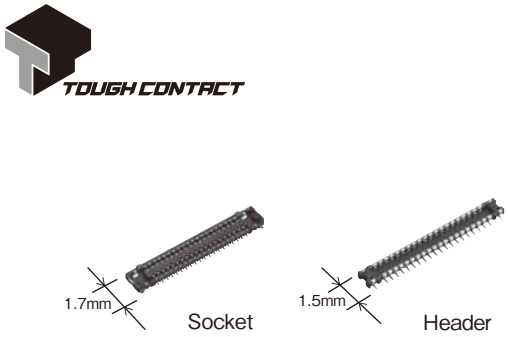

FEATURES

1. Slim: width 1.7mm
2. Low profile construction: mated height 0.6 mm/0.8 mm
3. "TOUGH CONTACT" construction withstands tough environments despite being slim and low profile.
4. For 0.6mm mated height, thanks to our proprietary "Fine fitting" construction, high removability with a nice click feel is maintained while being low profile.

APPLICATIONS

Wearable devices, smartphones and hearable devices

DETAILED FEATURES

Width 1.7mm slim and two-piece type connector

Mated height 0.6mm
Smaller compared to A35US; Width: approx. 23% down

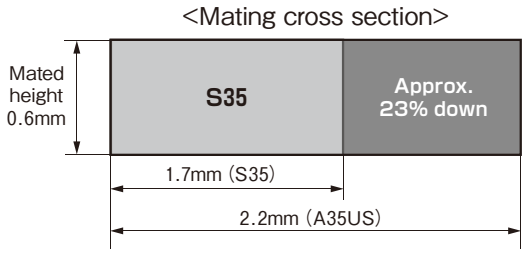

Mated height 0.8mm
Smaller compared to A35S/A4S; Width: approx. 32% down

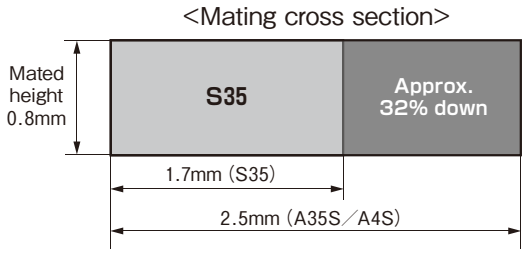

Proprietary "TOUGH CONTACT" construction for both high contact reliability and good workability while being slim and low profile

Mated height 0.6mm

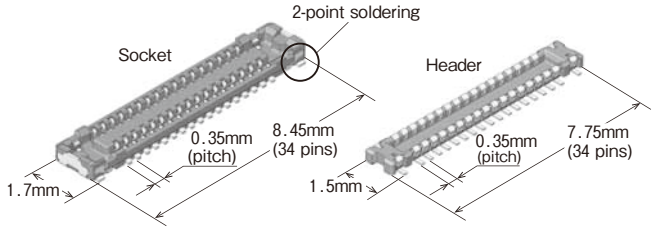

Mated height 0.8mm

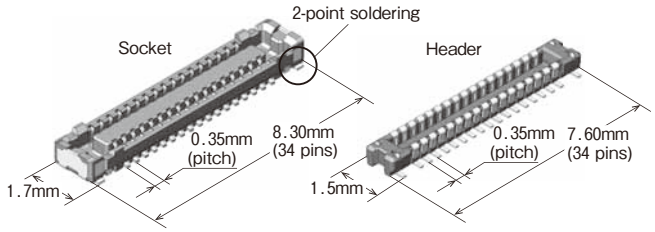

© Panasonic Corporation 2018

ORDERING INFORMATION

Mated height: 0.6mm

AXG ___ ___ 1 4 4

- 1: Socket / 2: Header
- Number of pins (2 digits)
- Mated height (Socket/Header) 1: 0.6 mm
- 4: (Fixed)
- Surface treatment (Contact portion / Terminal portion)
  (Socket)
  4: Base: Ni plating, Surface: Au plating/Base: Ni plating, Surface: Au plating
  (Header)
  4: Base: Ni plating, Surface: Au plating/Base: Ni plating, Surface: Au plating

Mated height: 0.8mm

AXG ___ ___ 2 2 4

- 1: Socket / 2: Header
- Number of pins (2 digits)
- Mated height (Socket/Header) 2: 0.8 mm
- 2: (Fixed)
- Surface treatment (Contact portion / Terminal portion)
  (Socket)
  4: Base: Ni plating, Surface: Au plating/Base: Ni plating, Surface: Au plating
  (Header)
  4: Base: Ni plating, Surface: Au plating/Base: Ni plating, Surface: Au plating

PRODUCT TYPES

Mated height	Number of pins	Part number		Packing	
		Socket	Header	Inner carton (1-reel)	Outer carton
0.6mm	6	AXG106144	AXG206144	15,000 pieces	30,000 pieces
	10	AXG110144	AXG210144		
	12	AXG112144	AXG212144		
	16	AXG116144	AXG216144		
	20	AXG120144	AXG220144		
	24	AXG124144	AXG224144		
	30	AXG130144	AXG230144		
	34	AXG134144	AXG234144		
	40	AXG140144	AXG240144		
	44	AXG144144	AXG244144		
	50	AXG150144	AXG250144		
	54	AXG154144	AXG254144		
	60	AXG160144	AXG260144		
0.8mm	12	AXG112224	AXG212224	15,000 pieces	30,000 pieces
	24	AXG124224	AXG224224		
	34	AXG134224	AXG234224		
	44	AXG144224	AXG244224		

Notes: 1. Order unit: For volume production: 1-inner carton (1-reel) units. For samples, please contact our sales office.
2. Please contact our sales office for connectors having a number of pins other than those listed above.

© Panasonic Corporation 2018

SPECIFICATIONS

1. Characteristics

Item		Specifications	Conditions
Electrical characteristics	Rated current	Max. 0.3 A/pin contact (Max. 5 A at total pin contacts)	
	Rated voltage	60V AC/DC	
	Dielectric strength	150V AC for 1 min.	No short-circuiting or damage at a detection current of 1 mA when the specified voltage is applied for 1 min.
	Insulation resistance	Min. 1,000MΩ (Initial)	Using 250V DC megger (applied for 1 min.)
	Contact resistance	Max. 90mΩ	According to the contact resistance measurement method of JIS C 5402
Mechanical characteristics	Composite insertion force	h = 0.6 mm 20 or less pins: Max. 26.0N, pin contact Over 22 pins: Max. 1. 300 N/pin contact × pin contacts (Initial stage) h = 0.8 mm Max. 1. 300 N/pin contact × pin contacts (Initial stage)	
	Composite removal force	Min. 0.215N/pin contact × pin contacts	
Environmental characteristics	Ambient temperature	–55 to +85°C	No icing. No condensation.
	Soldering heat resistance	The initial specification must be satisfied electrically and mechanically.	Reflow soldering: Peak temperature: 260°C or less (on the surface of the PC board around the connector terminals) Soldering iron: 300°C within 5 sec. 350°C within 3 sec.
	Storage temperature	–55 to +85°C (Products only) –40 to +50°C (Packaging structure)	No icing. No condensation.
	Thermal shock resistance (Header and socket mated)	5 cycles, insulation resistance: Min. 100MΩ, contact resistance: Max. 90mΩ	Conformed to MIL-STD-202F, method 107G Order / Temperature (°C) / Time (minutes) 1 / -55^{0}_{-3} / 30 2 / ∫ / Max. 5 3 / 85^{+3}_{0} / 30 4 / ∫ / Max. 5 -55^{0}_{-3}
	Humidity resistance (Header and socket mated)	120 hours, insulation resistance: Min. 100MΩ, contact resistance: Max. 90mΩ	Conformed to IEC60068-2-78 Temperature 40±2°C, Humidity 90 to 95% R.H.
	Salt water spray resistance (Header and socket mated)	24 hours, insulation resistance: Min. 100MΩ, contact resistance: Max. 90mΩ	Conformed to IEC60068-2-11 Temperature 35±2°C, Salt water concentration 5±1%
	H_2S resistance (Header and socket mated)	48 hours, contact resistance: Max. 90mΩ	Temperature 40±2°C, Gas concentration 3±1 ppm, Humidity 75 to 80% R.H.
Lifetime characteristics	Insertion and removal life	30 times	Repeated insertion and removal cycles of max. 200 times/hour
Unit weight		34 pins Socket h = 0.6 mm: 0.01g, h = 0.8 mm: 0.02g 34 pins Header h = 0.6 mm: 0.01g, h = 0.8 mm: 0.01g	

2. Material and surface treatment

Part name	Material	Surface treatment
Molded portion	LCP resin (UL94V-0)	—
Contact and Post	Copper alloy	Contact portion: Base: Ni plating, Surface: Au plating Terminal portion: Base: Ni plating, Surface: Au plating (except the terminal tips) The socket terminals close to the portion to be soldered have nickel barriers (exposed nickel portions).
Soldering terminals	Copper alloy	Sockets: Base: Ni plating, Surface: Pd + Au flash plating (except the terminal tips) Headers: Base: Ni plating, Surface: Au plating (except the terminal tips)

© Panasonic Corporation 2018

DIMENSIONS (Unit: mm)

The CAD data of the products with a CAD mark can be downloaded from: http://industrial.panasonic.com/ac/e/

Socket (Mated height: 0.6 mm)

CAD

External dimensions

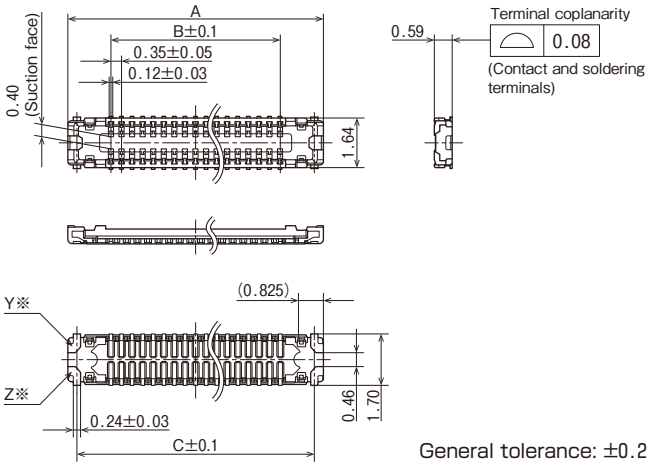

General tolerance: ±0.2

※Because the soldering terminal Y and Z are the unified structure, they are connected electrically.

Dimension table

Dimensions / Number of pins	A	B	C
6	3.55	0.70	2.95
10	4.25	1.40	3.65
12	4.60	1.75	4.00
16	5.30	2.45	4.70
20	6.00	3.15	5.40
24	6.70	3.85	6.10
30	7.75	4.90	7.15
34	8.45	5.60	7.85
40	9.50	6.65	8.90
44	10.20	7.35	9.60
50	11.25	8.40	10.65
54	11.95	9.10	11.35
60	13.00	10.15	12.40

Header (Mated height: 0.6 mm)

CAD

External dimensions

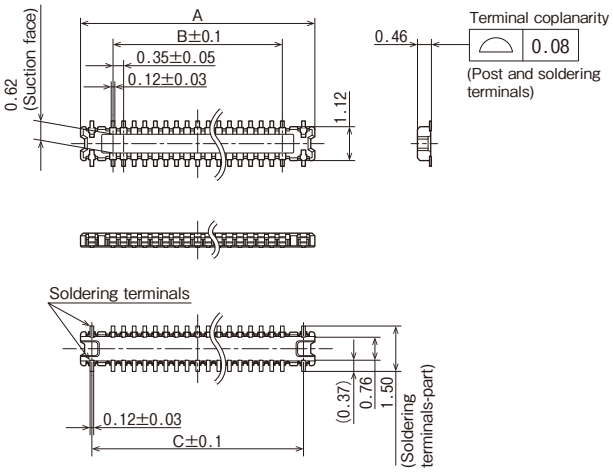

General tolerance: ±0.2

Dimension table

Dimensions / Number of pins	A	B	C
6	2.85	0.70	2.10
10	3.55	1.40	2.80
12	3.90	1.75	3.15
16	4.60	2.45	3.85
20	5.30	3.15	4.55
24	6.00	3.85	5.25
30	7.05	4.90	6.30
34	7.75	5.60	7.00
40	8.80	6.65	8.05
44	9.50	7.35	8.75
50	10.55	8.40	9.80
54	11.25	9.10	10.50
60	12.30	10.15	11.55

© Panasonic Corporation 2018

Socket (Mated height: 0.8 mm)

CAD

External dimensions

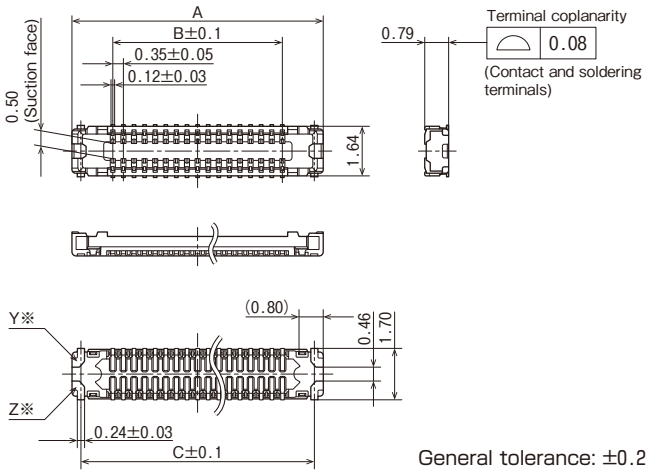

General tolerance: ±0.2

※Because the soldering terminal Y and Z are the unified structure, they are connected electrically.

Dimension table

Number of pins \ Dimensions	A	B	C
12	4.45	1.75	3.85
24	6.55	3.85	5.95
34	8.30	5.60	7.70
44	10.05	7.35	9.45

Header (Mated height: 0.8 mm)

CAD

External dimensions

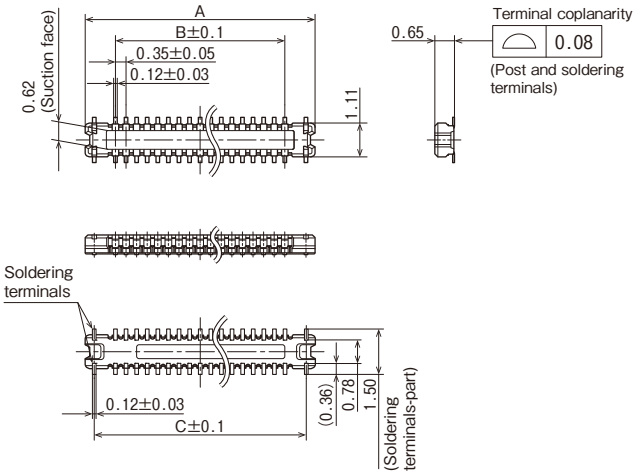

General tolerance: ±0.2

Dimension table

Number of pins \ Dimensions	A	B	C
12	3.75	1.75	3.15
24	5.85	3.85	5.25
34	7.60	5.60	7.00
44	9.35	7.35	8.75

Socket and Header are mated

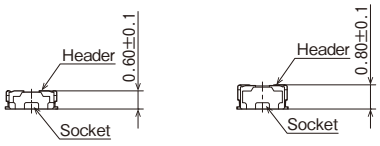

© Panasonic Corporation 2018

EMBOSSED TAPE DIMENSIONS (Unit: mm)

Specifications for taping

In accordance with JIS C 0806-3:1999. However, not applied to the mounting-hole pitch of some connectors.

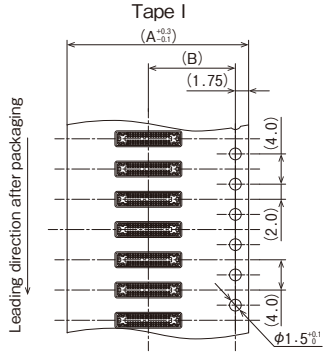

Specifications for the plastic reel

In accordance with EIAJ ET-7200B.

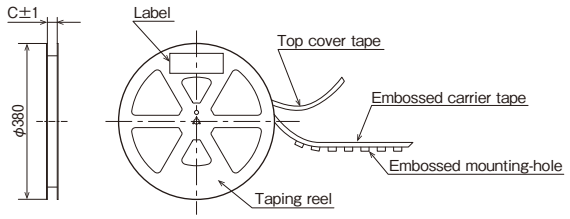

Dimension table

Type/Mated height	Number of pins	Type of taping	A	B	C	Quantity per reel
Socket 0.6mm and 0.8mm	Max. 30	Tape I	16.0	7.5	17.4	15,000
	34 to 60	Tape I	24.0	11.5	25.4	15,000

Type/Mated height	Number of pins	Type of taping	A	B	C	Quantity per reel
Header 0.6mm and 0.8mm	Max. 34	Tape I	16.0	7.5	17.4	15,000
	40 to 60	Tape I	24.0	11.5	25.4	15,000

Connector orientation with respect to embossed tape feeding direction

There is no indication on this product regarding top-bottom or left-right orientation.

Type / Direction of tape progress	Common for S35	
	Socket	Header
↓	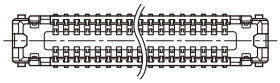	

© Panasonic Corporation 2018

NOTES (Unit: mm)

Design of PC board patterns

Conduct the recommended foot pattern design, in order to preserve the mechanical strength of terminal solder areas.

Recommended PC board and metal mask patterns

Connectors are mounted with high pitch density, intervals of 0.35 mm, 0.4 mm or 0.5 mm. In order to reduce solder and flux rise, solder bridges and other issues make sure the proper levels of solder is used.

The figures are recommended patterns. Please use them as a reference.

Socket (Mated height: 0.6 mm)

Recommended PC board pattern
(TOP VIEW)

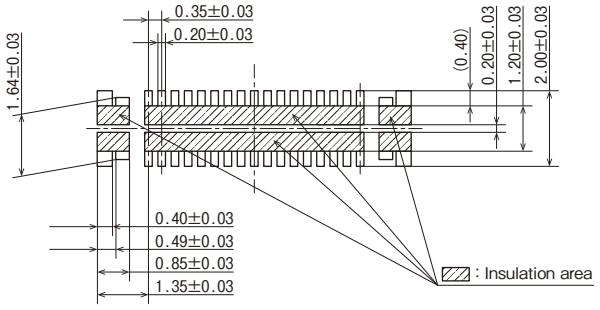

Recommended metal mask pattern
Metal mask thickness: When 100µm
(Terminal opening ratio: 70%)
(Metal-part opening ratio: 100%)

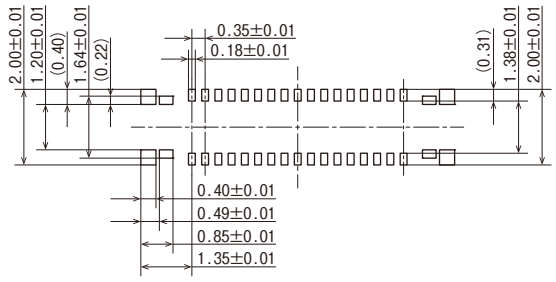

Socket (Mated height: 0.8 mm)

Recommended PC board pattern
(TOP VIEW)

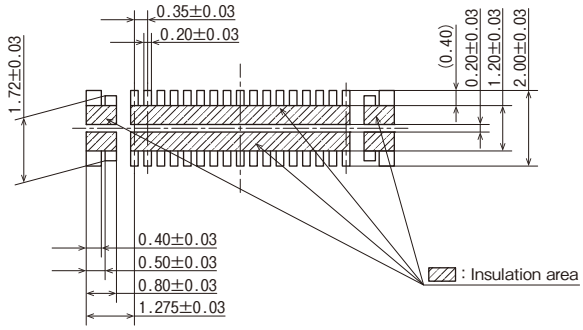

Recommended metal mask pattern
Metal mask thickness: When 100µm
(Terminal opening ratio: 70%)
(Metal-part opening ratio: 100%)

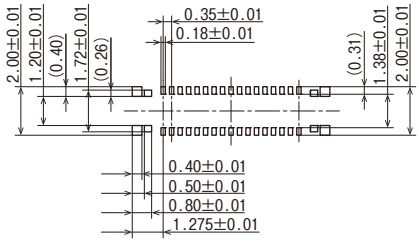

© Panasonic Corporation 2018

Header (Mated height: 0.6 mm and 0.8 mm)
Recommended PC board pattern
(TOP VIEW)

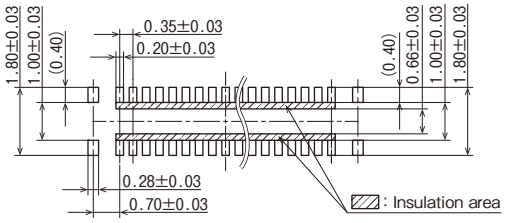

Recommended metal mask pattern
Metal mask thickness: When 100µm
(Terminal opening ratio: 70%)
(Metal-part opening ratio: 100%)

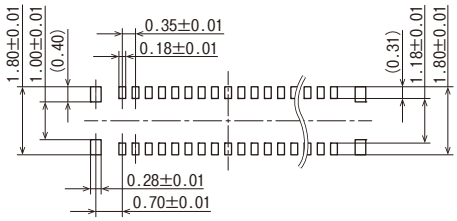

Please refer to the latest product specifications when designing your product.

© Panasonic Corporation 2018

For board-to-board/board-to-FPC

Notes on Using Narrow pitch Connectors/ High Current Connectors

About safety remarks

Observe the following safety remarks to prevent accidents and injuries.

1) Do not use these connectors beyond the specification sheets. The usage outside of specified rated current, dielectric strength, and environmental conditions and so on may cause circuitry damage via abnormal heating, smoke, and fire.

2) In order to avoid accidents, your thorough specification review is appreciated. Please contact our sales office if your usage is out of the specifications. Otherwise, Panasonic Corporation cannot guarantee the quality and reliability.

3) Panasonic Corporation is consistently striving to improve quality and reliability. However, the fact remains that electrical components and devices generally cause failures at a given statistical probability. Furthermore, their durability varies with use environments or use conditions. In this respect, please check for actual electrical components and devices under actual conditions before use. Continued usage in a state of degraded condition may cause the deteriorated insulation, thus result in abnormal heat, smoke or firing. Please carry out safety design and periodic maintenance including redundancy design, design for fire spread prevention, and design for malfunction prevention so that no accidents resulting in injury or death, fire accidents, or social damage will be caused as a result of failure of the products or ending life of the products.

Regarding the design of devices and PC board patterns

1) When using the board to board connectors, do not connect a pair of board with multiple connectors. Otherwise, misaligned connector positions may cause mating failure or product breakage.

2) With mounting equipment, there may be up to a ±0.2 to 0.3 mm error in positioning. Be sure to design PC boards and patterns while taking into consideration the performance and abilities of the required equipment.

3) Some connectors have tabs embossed on the body to aid in positioning. When using these connectors, make sure that the PC board is designed with positioning holes to match these tabs.

4) To ensure the required mechanical strength when soldering the connector terminals, make sure the PC board meets recommended PC board pattern design dimensions given.

5) PC board

Control the thicknesses of the cover lay and adhesive to prevent poor soldering. This connector has no stand-off. Therefore, minimize the thickness of the cover lay, etc. so as to prevent the occurrence of poor soldering.

6) For all connectors of the narrow pitch series, to prevent the PC board from coming off during vibrations or impacts, and to prevent loads from falling directly on the soldered portions, be sure to design some means to fix the PC board in place.

Example) Secure in place with screws

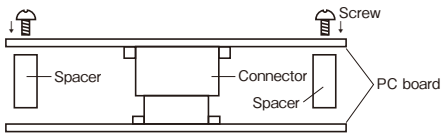

When connecting PC boards, take appropriate measures to prevent the connector from coming off.

7) When mounting connectors on a FPC

• When the connector soldered to FPC is mated or unmated, solder detachment may occur by the force to the terminals. Connector handling is recommended in the condition when the reinforcing plate is attached to the backside of FPC where the connector is mounted. The external dimension of the reinforcing plate is recommended to be larger than the dimension of “Recommended PC board pattern” (extended dimension of one side is approximately 0.5 to 1.0 mm). The materials and thickness of the reinforcing plate are glass epoxy or polyimide (thickness 0.2 to 0.3 mm) or SUS (thickness 0.1 to 0.2 mm).

• As this connector has temporary locking structure, the connector mating may be separated by the dropping impact depend on the size, weight or bending force of the FPC. Please consider the measures at usage to prevent the mating separation.

8) The narrow pitch connector series is designed to be compact and thin. Although ease of handling has been taken into account, take care when mating the connectors, as displacement or angled mating could damage or deform the connector.

© Panasonic Corporation 2018

Regarding the selection of the connector placement machine and the mounting procedures

1) Select the placement machine taking into consideration the connector height, required positioning accuracy, and packaging conditions.
2) Be aware that if the chucking force of the placement machine is too great, it may deform the shape of the connector body or connector terminals.
3) Be aware that during mounting, external forces may be applied to the connector contact surfaces and terminals and cause deformations.
4) Depending on the size of the connector being used, self alignment may not be possible. In such cases, be sure to carefully position the terminal with the PC board pattern.
5) The positioning bosses give an approximate alignment for positioning on the PC board. For accurate positioning of the connector when mounting it to the PC board, we recommend using an automatic positioning machine.
6) In case of dry condition, please note the occurrence of static electricity. The product may be adhered to the embossed carrier tape or the cover tape in dry condition. Recommended humidity is from 40 to 60%RH and please remove static electricity by ionizer in manufacturing process.

Regarding soldering

Reflow soldering

1) Measure the recommended profile temperature for reflow soldering by placing a sensor on the PC board near the connector surface or terminals. (Please refer to the specification for detail because the temperature setting differs by products.)
2) As for cream solder printing, screen printing is recommended.
3) When setting the screen opening area and PC board foot pattern area, refer the recommended PC board pattern and window size of metal mask on the specification sheet, and make sure that the size of board pattern and metal mask at the base of the terminals are not increased.
4) Please pay attentions not to provide too much solder. It makes miss mating because of interference at soldering portion when mating.

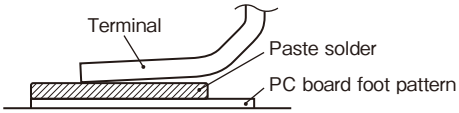

5) When mounting on both sides of the PC board and the connector is mounting on the underside, use adhesives or other means to ensure the connector is properly fixed to the PC board. (Double reflow soldering on the same side is possible.)
6) The condition of solder or flux rise and wettability varies depending on the type of solder and flux. Solder and flux characteristics should be taken into consideration and also set the reflow temperature and oxygen level.
7) Do not use resin-containing solder. Otherwise, the contacts might be firmly fixed.
8) Soldering conditions
Please use the reflow temperature profile conditions recommended below for reflow soldering. Please contact our sales office before using a temperature profile other than that described below (e.g. lead-free solder)

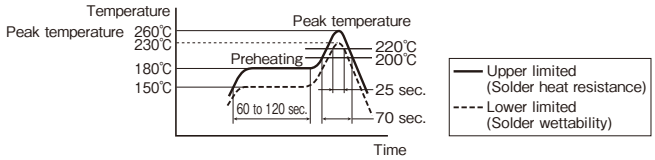

For products other than the ones above, please refer to the latest product specifications.
9) The temperature profiles given in this catalog are values measured when using the connector on a resin-based PC board. When performed reflow soldering on a metal board (iron, aluminum, etc.) or a metal table to mount on a FPC, make sure there is no deformation or discoloration of the connector before mounting.
10) Please contact our sales office when using a screen-printing thickness other than that recommended.

Hand soldering

1) Set the soldering iron so that the tip temperature is less than that given in the table below.

Table A

Product name	Soldering iron temperature
SMD type connectors all products	300°C within 5 sec. 350°C within 3 sec.

2) Do not allow flux to spread onto the connector leads or PC board. This may lead to flux rising up to the connector inside.
3) Touch the soldering iron to the foot pattern. After the foot pattern and connector terminal are heated, apply the solder wire so it melts at the end of the connector terminals.

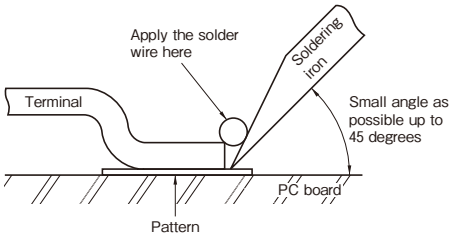

4) Be aware that soldering while applying a load on the connector terminals may cause improper operation of the connector.
5) Thoroughly clean the soldering iron.
6) Flux from the solder wire may get on the contact surfaces during soldering operations. After soldering, carefully check the contact surfaces and clean off any solder before use.
7) These connector is low profile type. If too much solder is supplied for hand soldering, It makes miss mating because of interference at soldering portion. Please pay attentions.

© Panasonic Corporation 2018

Solder reworking
1) Finish reworking in one operation.
2) In case of soldering rework of bridges. Do not use supplementary solder flux. Doing so may cause contact problems by flux.
3) Keep the soldering iron tip temperature below the temperature given in Table A.

Handling single components

1) Make sure not to drop or allow parts to fall from work bench.
2) Excessive force applied to the terminals could cause warping, come out, or weaken the adhesive strength of the solder. Handle with care.
3) Do not insert or remove the connector when it is not soldered. Forcibly applied external pressure on the terminals can weaken the adherence of the terminals to the molded part or cause the terminals to lose their evenness.

Precautions for mating

This product is designed with ease of handling. However, in order to prevent the deformation or damage of contacts and molding, take care and do not mate the connectors as shown right.

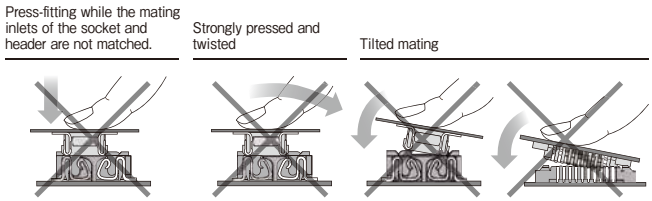

Cleaning flux from PC board

There is no need to clean this product.
If cleaning it, pay attention to the following points to prevent the negative effect to the product.

1) Keep the cleaning solvent clean and prevent the connector contacts from contamination.
2) Some cleaning solvents are strong and they may dissolve the molded part and characters, so pure water passed liquid solvent is recommended.

Handling the PC board

Handling the PC board after mounting the connector
When cutting or bending the PC board after mounting the connector, be careful that the soldered sections are subjected to excessive force.

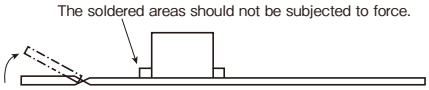

Storage of connectors

1) To prevent problems from voids or air pockets due to heat of reflow soldering, avoid storing the connectors in areas of high humidity.
2) Depending on the connector type, the color of the connector may vary from connector to connector depending on when it is produced. Some connectors may change color slightly if subjected to ultraviolet rays during storage. This is normal and will not affect the operation of the connector.
3) When storing the connectors with the PC boards assembled and components already set, be careful not to stack them up so the connectors are subjected to excessive forces.
4) Avoid storing the connectors in locations with excessive dust. The dust may accumulate and cause improper connections at the contact surfaces.

Other Notes

1) Do not remove or insert the electrified connector (in the state of carrying current or applying voltage).
2) Dropping of the products or rough mishandling may bend or damage the terminals and possibly hinder proper reflow soldering.
3) Before soldering, try not to insert or remove the connector more than absolutely necessary.
4) When coating the PC board after soldering the connector to prevent the deterioration of insulation, perform the coating in such a way so that the coating does not get on the connector.
5) There may be variations in the colors of products from different production lots. This is normal.
6) The connectors are not meant to be used for switching.
7) Product failures due to condensation are not covered by warranty.

© Panasonic Corporation 2018

Regarding sample orders to confirm proper mounting

When ordering samples to confirm proper mounting with the placement machine, connectors are delivered in 50-piece units in the condition given right. Consult a sale representative for ordering sample units.

Condition when delivered from manufacturing

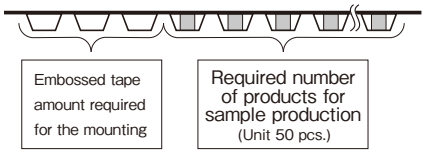

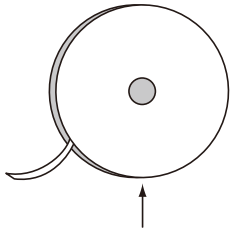

Reel
(Delivery can also be made on a reel by customer request.)

Please refer to the latest product specifications when designing your product.

© Panasonic Corporation 2018

Please contact .....

Panasonic Corporation
Electromechanical Control Business Division
■ 1006, Oaza Kadoma, Kadoma-shi, Osaka 571-8506, Japan
industrial.panasonic.com/ac/e/

Panasonic®

©Panasonic Corporation 2018

ACCTB66E-3 201803-T

Specifications are subject to change without notice.