Long Stroke and Sliding Contact Construction Sealed Switches

Turquoise Stroke Switches

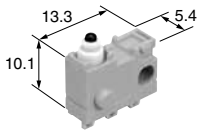

(Unit: mm)

RoHS compliant

FEATURES

- **For pin plunger type, it maintains a long stroke OT (Over Travel) with over 2.2 mm on the NO side and over 2.5 mm on the NC side.**
- **Since contact force does not depend on the operation stroke, the range of possible use over the entire stroke is greatly increased.**
- **High contact reliability to support low level switching loads**
- **Highly effective sealing for resistance against adverse environments**
- **Silent operation with sliding contact**

TYPICAL APPLICATIONS

- **Automobiles (detection of door opening and closing and shift lever position, etc.)**
- **Household appliances (vacuum cleaners, air conditioners, washing machines, etc.)**

ORDERING INFORMATION

ASQ1 □ □ □ □

- Size of mounting hole
  - 0: Mounting hole 3 mm standard type
  - 1: Mounting hole 3 mm without boss type
  - 4: Right side pin type (solder terminal only)
  - 5: Left side pin type (solder terminal only)
  - 6: Right 2 boss type (solder terminal only)
  - 7: Left 2 boss type (solder terminal only)
- Terminal
  - 2: Wire leads right side type (SPST-NC and SPST-NO only)
  - 3: Wire leads left side type (SPST-NC and SPST-NO only)
  - 4: Solder terminal
  - 5: PC board terminal
  - 6: Wire leads bottom type
  - 7: PC board right angle terminal
  - 8: PC board left angle terminal
- Contact form
  - 1: SPDT (COM NO NC)
  - 2: SPST-NC (wire lead type only) (COM NC)
  - 3: SPST-NO (wire lead type only) (COM NO)
- Actuator
  - 0: Pin plunger
  - 7: Leaf lever
  - 8: Simulated leaf lever

Note: Not every combination is available. Please refer to the following table, “PRODUCT TYPES”.

PRODUCT TYPES

■ Terminal type (Mounting hole 3mm standard type/Mounting hole 3mm without boss type/2 boss type/Side pin type)

Actuator	Operating Force OF (Max.)	Mounting hole 3mm standard type			Mounting hole 3mm without boss type	Right 2 boss type	Left 2 boss type	Right side pin type	Left side pin type
		Solder terminal	PC right angle terminal	PC left angle terminal	PC board terminal	Solder terminal	Solder terminal	Solder terminal	Solder terminal
Pin plunger	1.5N	ASQ10410	ASQ10710	ASQ10810	ASQ11510	ASQ16410	ASQ17410	ASQ14410	ASQ15410
Leaf lever	1.7N	ASQ10417	ASQ10717	ASQ10817	ASQ11517	ASQ16417	ASQ17417	ASQ14417	ASQ15417
Simulated leaf lever	1.5N	ASQ10418	ASQ10718	ASQ10818	ASQ11518	ASQ16418	ASQ17418	ASQ14418	ASQ15418

© Panasonic Corporation 2017

■ Wire leads bottom type (Mounting hole 3mm standard type)

Actuator	Operating Force OF (Max.)	Wire leads bottom type (Mounting hole 3mm standard type)		
		SPDT	SPST-NC	SPST-NO
Pin plunger	1.5N	ASQ10610	ASQ10620	ASQ10630
Leaf lever	1.7N	ASQ10617	ASQ10627	ASQ10637
Simulated leaf lever	1.5N	ASQ10618	ASQ10628	ASQ10638

■ Wire leads side type (Mounting hole 3mm standard type)

Actuator	Operating Force OF (Max.)	Wire leads right side type (Mounting hole 3mm standard type)		Wire leads left side type (Mounting hole 3mm standard type)	
		SPST-NC	SPST-NO	SPST-NC	SPST-NO
Pin plunger	1.5N	ASQ10220	ASQ10230	ASQ10320	ASQ10330
Leaf lever	1.7N	ASQ10227	ASQ10237	ASQ10327	ASQ10337
Simulated leaf lever	1.5N	ASQ10228	ASQ10238	ASQ10328	ASQ10338

SPECIFICATIONS

■ Contact rating

1 mA 5 V DC to 100 mA 30 V DC

Note: Please consult us regarding 42 V DC rating.

■ Operation environment and conditions

Item	Specifications
Ambient and storage temperature	–40°C to +85°C (no freezing and condensing)
Allowable operating speed	30 to 500 mm/sec.
Max. operating cycle rate	120 cpm

Note: When switching at low and high speeds or under vibration, or in high-temperature, high-humidity environments, life and performance may be reduced significantly depending on the load capacity. Please consult us.

■ Electrical characteristics

Dielectric strength (Initial)	Between non-continuous terminals: 600 Vrms, Between each terminal and other exposed metal parts: 1,500 Vrms, Between each terminal and ground: 1,500 Vrms (at detection current of 1 mA)
Insulation resistance (Initial)	Min. 100 MΩ (at 500 V DC insulation resistance meter) (Locations measured same as dielectric strength.)
Contact resistance (Initial)	Max. 1 Ω (by voltage drop 0.1 A 6 to 8 V DC)

■ Characteristics

Item		Specifications	
Electrical switching life	5 V DC 1 mA (Resistive load)	Min. 5×10^5 Note 1)	Switching frequency: 20 times/min. Conduction ratio: 1:1 Pushbutton operation speed: 100 mm/s Pushbutton switching position: free position (FP) to operation limit position (TTP)
	16 V DC 50 mA (Resistive load)	Min. 5×10^5 Note 2)	
	30 V DC 100 mA (Resistive load)	Min. 2×10^5 Note 2)	
Vibration resistance (malfunction vibration resistance)		Single amplitude: 0.75 mm Amplitude of vibration: 10 to 55 Hz (4 minutes cycle) Direction and time: 30 minutes each in X, Y and Z directions	
		Amplitude of vibration: 5 to 200 Hz (10 minutes cycle) Acceleration: 43.1 m/s² Direction and time: 30 minutes each in X, Y and Z directions	
Shock resistance (malfunction shock resistance)		Shock value: 980 m/s² Direction and time: 5 times each in X, Y and Z directions	
Vibration resistance endurance		Frequency of vibration: 33.3 Hz, Acceleration: 43.1 m/s² Direction and time: 8 hours each in X, Y and Z directions	
Terminal strength		6 N min. (each direction) *Terminal deformation possible.	
Heat resistance		85°C 500 hours	
Cold resistance		–40°C 500 hours	
Humidity resistance		40°C 95% RH 500 hours	
Thermal shock resistance		30 min. at 85°C to 30 min at –40°C for 1,000 cycles	
Unit weight		Approx. 0.8 g (terminal type), Approx. 5.4 g (wire leads side type)	
Protection grade		IP67 (except exposed terminal part of terminal type)	

Note: As long as there are no particular designations, the following conditions apply to the test environment.
- Ambient temperature: 5 to 35°C
- Relative humidity: 25 to 85% RH
- Air pressure: 86 to 106 kPa

Note 1: Switching life for single switching (COM-NC or COM-NO connection) and double switching (COM-NC and COM-NO connection).
Note 2: Switching life is for single switching life. For double switching it is greater than 100,000 times.

© Panasonic Corporation 2017

■ Protection grade

1) JIS C0920 (water-resistance experiments for electrical machines and protection rating against incursion of solid substances): Immersion protected (Note 1)
2) IEC 60529 (rating for outer shell protection): IP67 (Immersion protected) (Note 1)
3) JIS D0203 (method for testing moisture resistance and water resistance in automotive components): Equivalent of D2 (Note 2)

Note 1) A concrete testing method is to check for any adverse effect on the structure after leaving it submerged for 30 minutes under 1 m of water (with temperature difference between water and switch no larger than 5°C).
Note 2) A concrete testing method is to check for any adverse effect on the structure after leaving it submerged for 10 minutes under 10 cm water (with temperature difference between water and switch no larger than 30°C).

■ Operating characteristics

Characteristics		Unit	Pin plunger	Leaf lever	Simulated leaf lever
Operating Force (max. OF) *Note 2		N	1.5	1.7	1.5
Total travel Force (max. TF) (reference value)		N	(2.0)	(3.1)	(2.8)
Free Position (max. FP)	From mounting boss and hole center line	mm	9.2	11.5	14.4
	From standoff		13.4	15.7	18.6
Operating Position on NC side OP (NC) *Note 3	From mounting boss and hole center line	mm	8.7±0.3	9.8±0.5	12.5±0.5
	From standoff		12.9±0.3	14.0±0.5	16.7±0.5
Operating Position on NO side OP (NO) *Note 4	From mounting boss and hole center line	mm	8.4±0.3	9.3±0.5	12.0±0.5
	From standoff		12.6±0.3	13.5±0.5	16.2±0.5
Release Position on NC side RP (NC) *Note 5	From mounting boss and hole center line	mm	8.8±0.3	10.1±0.5	12.9±0.5
	From standoff		13.0±0.3	14.3±0.5	17.1±0.5
Release Position on NO side RP (NO) *Note 6	From mounting boss and hole center line	mm	8.5±0.3	9.6±0.5	12.4±0.5
	From standoff		12.7±0.3	13.8±0.5	16.6±0.5
Over travel on NC side (min. OT (NC))		mm	2.5	3.1	3.3
Over travel on NO side (min. OT (NO))		mm	2.2	2.6	2.8
Total Travel Position (TTP) (reference value)	From mounting boss and hole center line	mm	(5.9)	(6.2)	(8.7)
	From standoff		(10.1)	(10.4)	(12.9)

Notes: 1. The above indicates the characteristics when operating the pushbutton from the vertical direction.
2. Indicates operation load for NO contact to achieve ON status.
3. Indicates position for NC contact to achieve OFF status.
4. Indicates position for NO contact to achieve ON status.
5. Indicates position for NC contact to achieve ON status.
6. Indicates position for NO contact to achieve OFF status.

OPERATION CONCEPT DIAGRAM

Contact form: SPDT

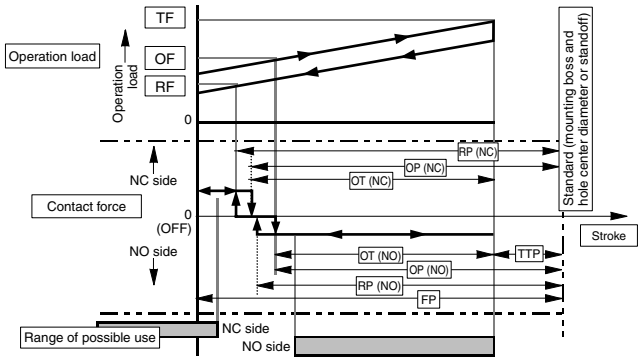

DATA

Applicable current range (Reference)

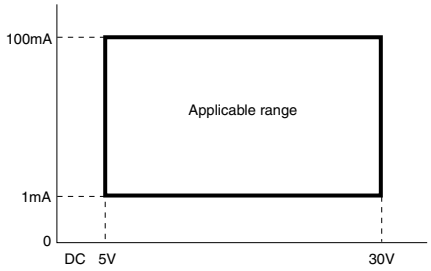

© Panasonic Corporation 2017

DIMENSIONS

(Unit: mm) General tolerance: ±0.25

The CAD data of the products with a CAD Data mark can be downloaded from: http://industrial.panasonic.com/ac/e/

■ Terminal type: Mounting hole 3 mm, standard type Pin plunger

CAD Data

External dimensions

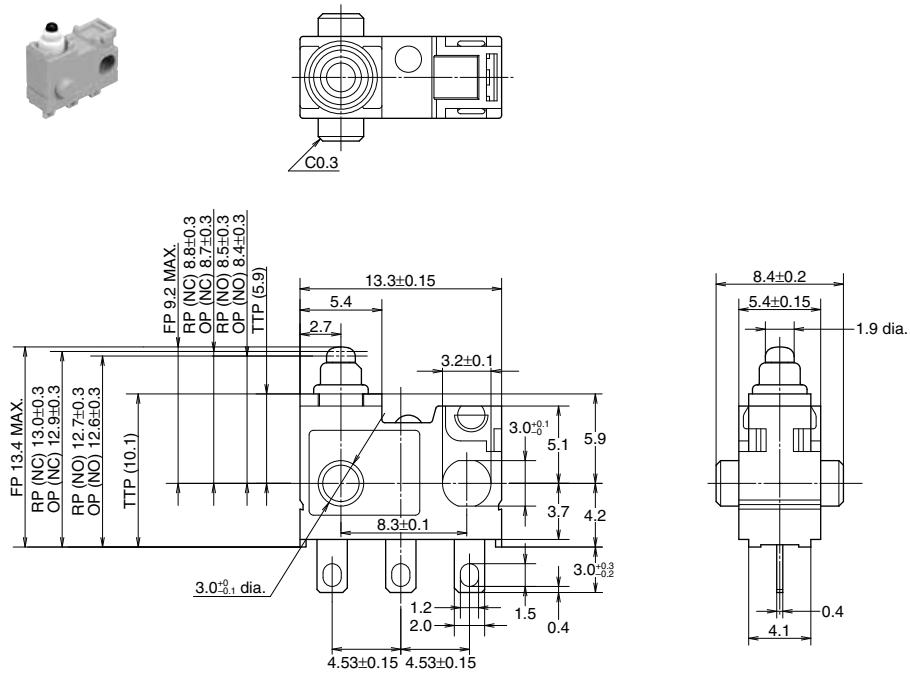

Operating Force (max. OF)		1.5N
Free Position (max. FP)	From mounting boss and hole center line	9.2mm
	From standoff	13.4mm
Operating Position on NC side OP (NC)	From mounting boss and hole center line	8.7±0.3mm
	From standoff	12.9±0.3mm
Operating Position on NO side OP (NO)	From mounting boss and hole center line	8.4±0.3mm
	From standoff	12.6±0.3mm
Release Position on NC side RP (NC)	From mounting boss and hole center line	8.8±0.3mm
	From standoff	13.0±0.3mm
Release Position on NO side RP (NO)	From mounting boss and hole center line	8.5±0.3mm
	From standoff	12.7±0.3mm
Over travel on NC side (min. OT (NC))		2.5mm
Over travel on NO side (min. OT (NO))		2.2mm

■ Terminal type: Leaf lever

CAD Data

External dimensions

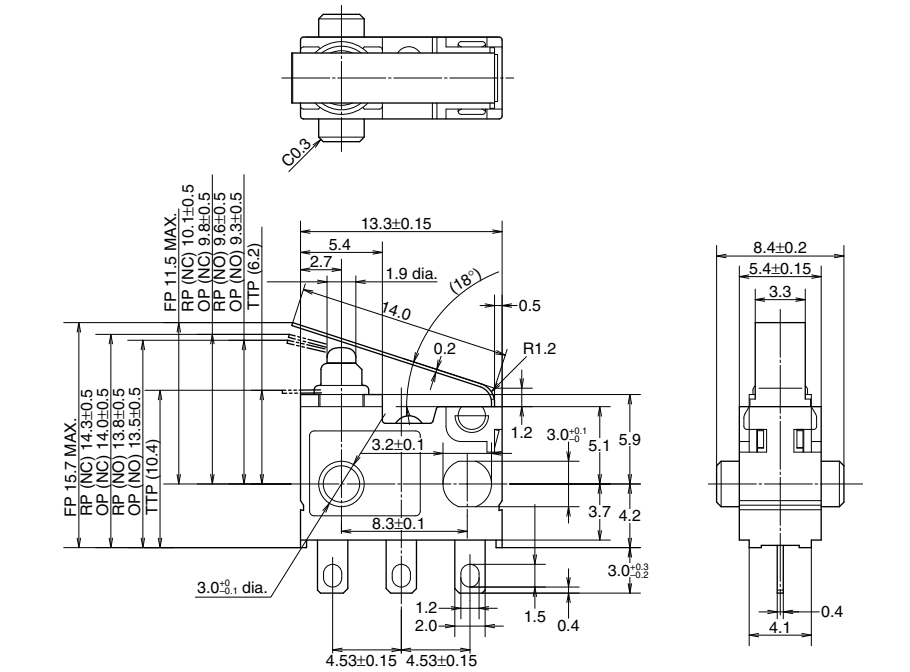

Operating Force (max. OF)		1.7N
Free Position (max. FP)	From mounting boss and hole center line	11.5mm
	From standoff	15.7mm
Operating Position on NC side OP (NC)	From mounting boss and hole center line	9.8±0.5mm
	From standoff	14.0±0.5mm
Operating Position on NO side OP (NO)	From mounting boss and hole center line	9.3±0.5mm
	From standoff	13.5±0.5mm
Release Position on NC side RP (NC)	From mounting boss and hole center line	10.1±0.5mm
	From standoff	14.3±0.5mm
Release Position on NO side RP (NO)	From mounting boss and hole center line	9.6±0.5mm
	From standoff	13.8±0.5mm
Over travel on NC side (min. OT (NC))		3.1mm
Over travel on NO side (min. OT (NO))		2.6mm

Note: When switching at high speed or under shock, lever endurance may drop. Therefore, please be sure to conduct an endurance evaluation under actual switching conditions.

© Panasonic Corporation 2017

■ Terminal type: Simulated leaf lever

CAD Data

External dimensions

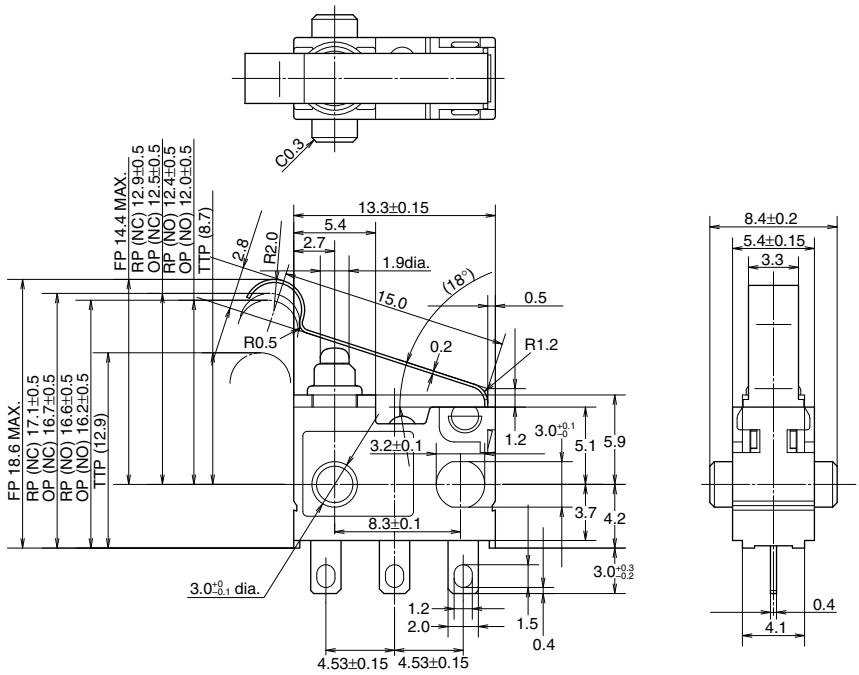

Operating Force (max. OF)		1.5N
Free Position (max. FP)	From mounting boss and hole center line	14.4mm
	From standoff	18.6mm
Operating Position on NC side OP (NC)	From mounting boss and hole center line	12.5±0.5mm
	From standoff	16.7±0.5mm
Operating Position on NO side OP (NO)	From mounting boss and hole center line	12.0±0.5mm
	From standoff	16.2±0.5mm
Release Position on NC side RP (NC)	From mounting boss and hole center line	12.9±0.5mm
	From standoff	17.1±0.5mm
Release Position on NO side RP (NO)	From mounting boss and hole center line	12.4±0.5mm
	From standoff	16.6±0.5mm
Over travel on NC side (min. OT (NC))		3.3mm
Over travel on NO side (min. OT (NO))		2.8mm

Note: When switching at high speed or under shock, lever endurance may drop. Therefore, please be sure to conduct an endurance evaluation under actual switching conditions.

■ PC board terminal: Mounting hole 3 mm without boss type

CAD Data

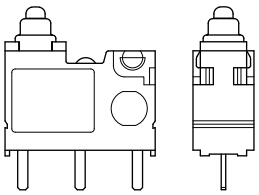

PC board terminal

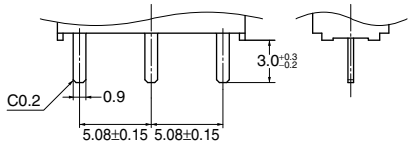

PC board pattern

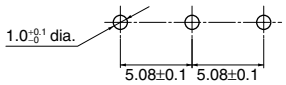

■ Terminal type: Right side pin type

CAD Data

External dimensions

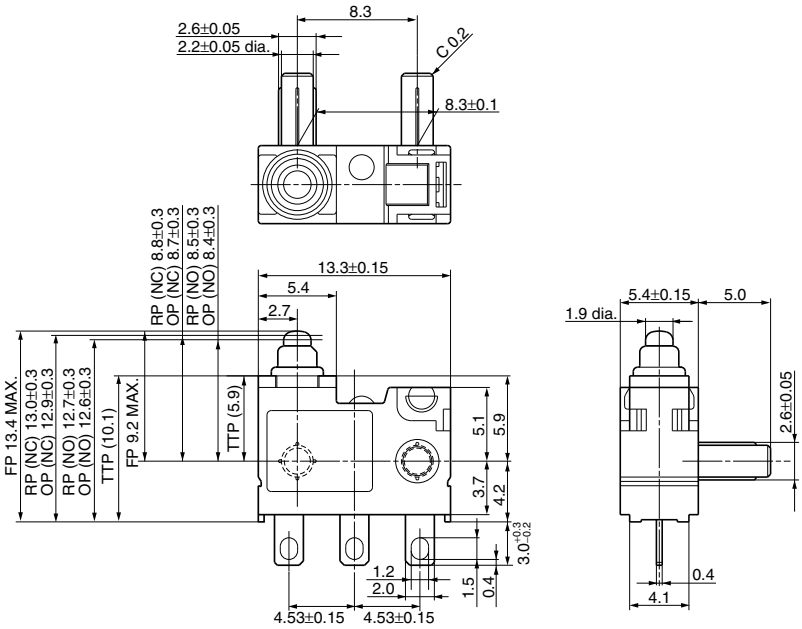

© Panasonic Corporation 2017

■ Terminal type: Left side pin type

CAD Data

External dimensions

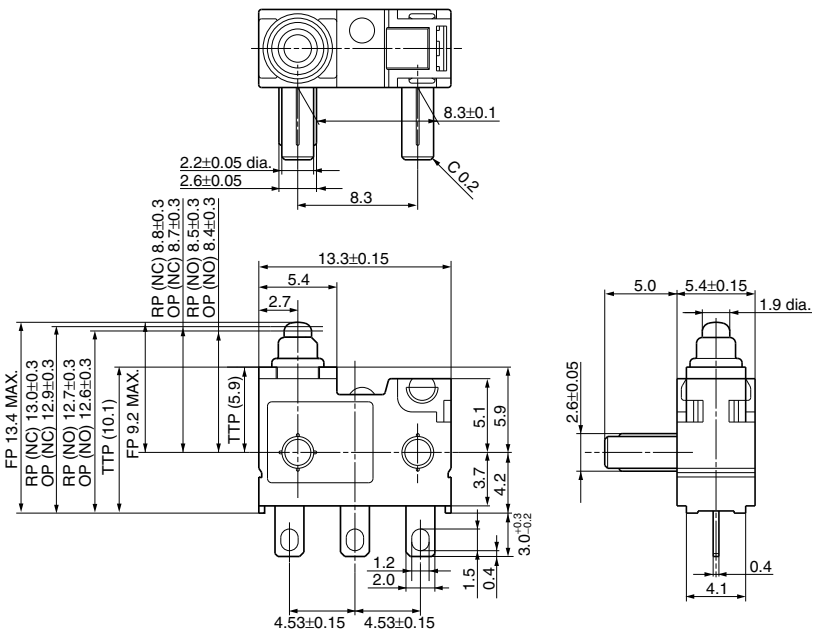

■ Terminal type: Right 2 boss type

CAD Data

External dimensions

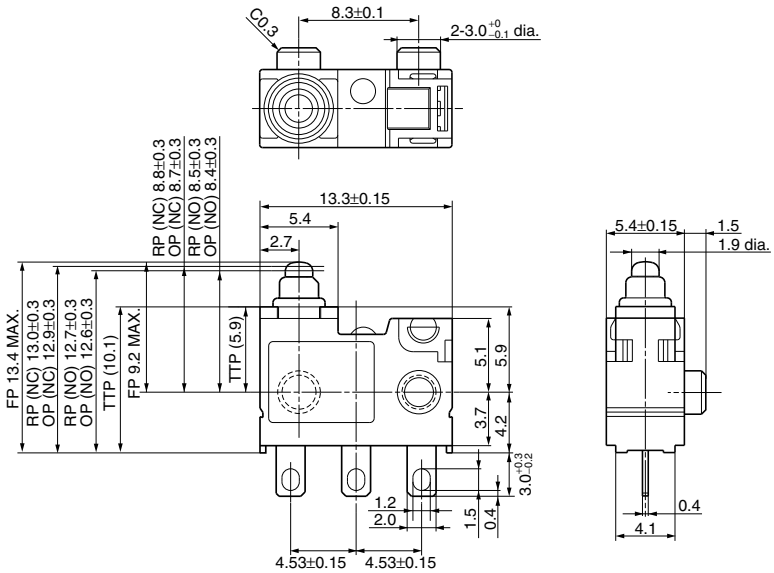

■ Terminal type: Left 2 boss type

CAD Data

External dimensions

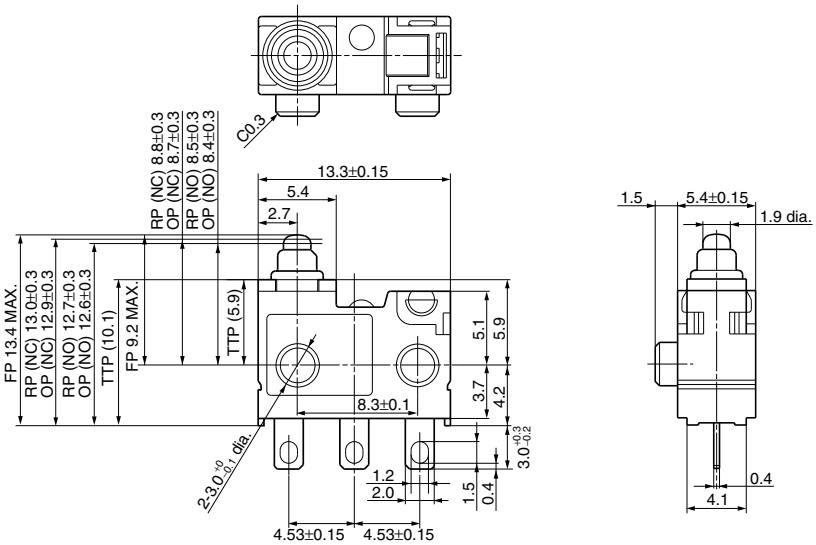

© Panasonic Corporation 2017

■ **Angle terminal type: Mounting hole 3 mm, standard type (Right type)**

CAD Data

External dimensions

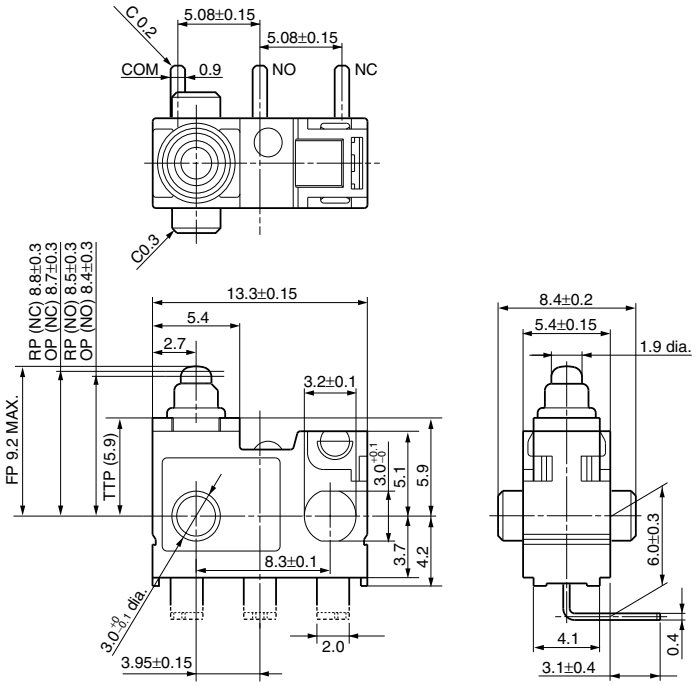

■ **Angle terminal type: Mounting hole 3 mm, standard type (Left type)**

CAD Data

External dimensions

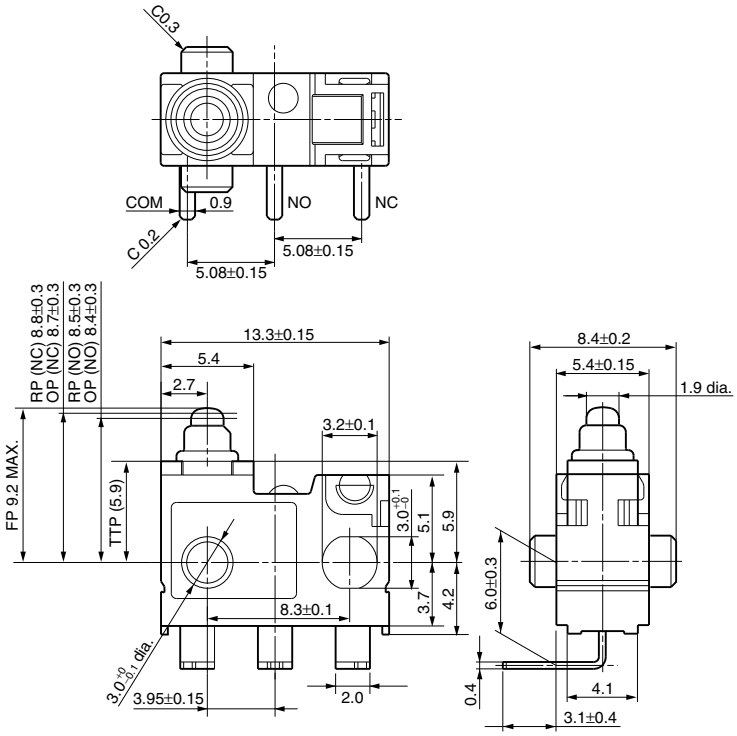

© Panasonic Corporation 2017

■ **Wire leads bottom type: Mounting hole 3 mm, standard type**

CAD Data

External dimensions

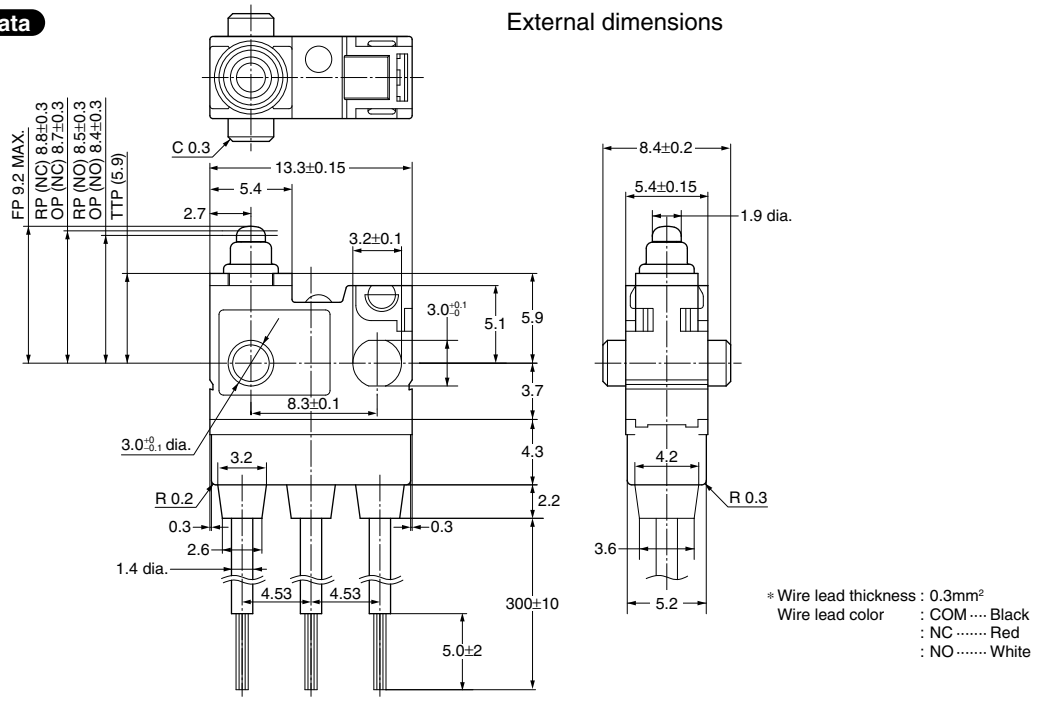

∗ Wire lead thickness : 0.3mm²
Wire lead color : COM ···· Black
: NC ····· Red
: NO ····· White

■ **Wire leads right side type: Mounting hole 3 mm, standard type**

CAD Data

External dimensions

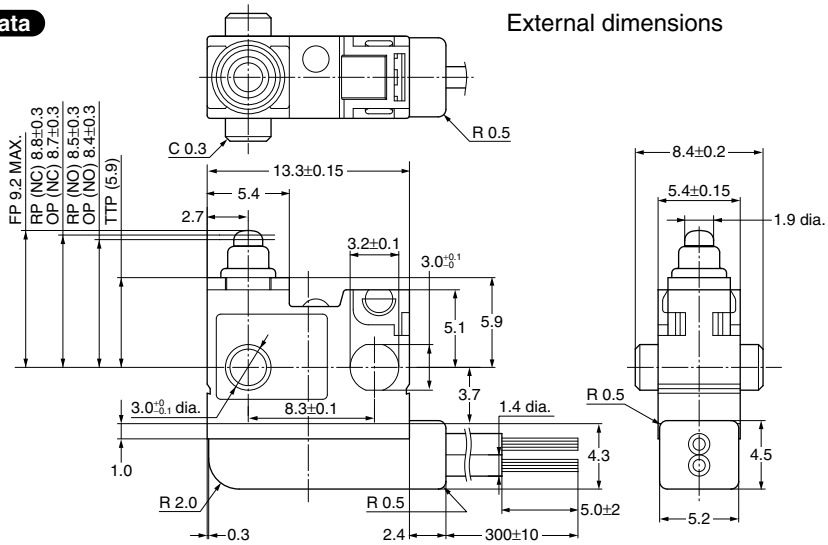

∗ Wire lead thickness : 0.3mm²
Wire lead color : COM ···· Black
: NC ····· Red
: NO ····· White

■ **Wire leads left side type: Mounting hole 3 mm, standard type**

CAD Data

External dimensions

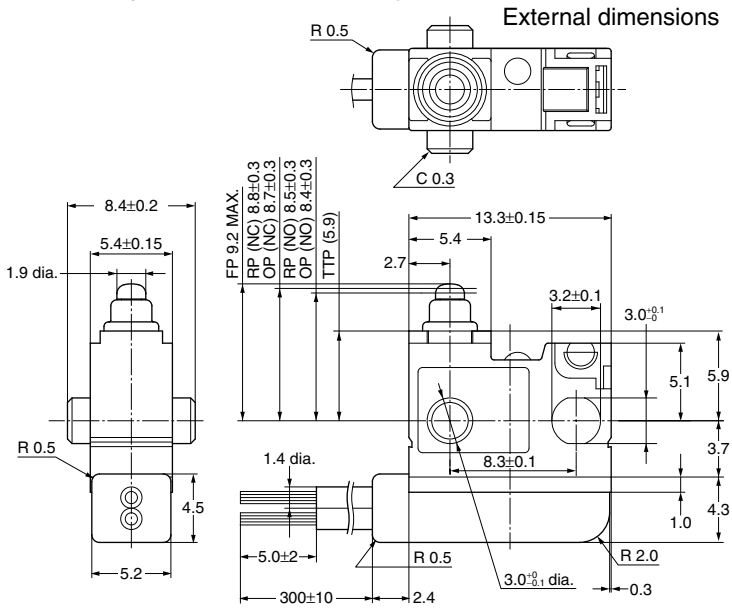

∗ Wire lead thickness : 0.3mm²
Wire lead color : COM ···· Black
: NC ····· Red
: NO ····· White

© Panasonic Corporation 2017

CAUTIONS FOR USE

■ **Soldering conditions**

The application of excessive heat upon the switch when soldering can cause degradation of switch operation. Therefore, be sure to keep within the conditions given below.
Manual soldering: use soldering irons (max. 350°C, within 3 seconds at each terminal) capable of temperature adjustment. This is to prevent deterioration due to soldering heat. Care should be taken not to apply force to the terminals during soldering.
(More than one second interval is required to apply heat at each terminal.)
Please consult us if you intend to use a soldering iron that exceeds 60 W.

■ **Mounting**

Please avoid use in which load would be applied to the sides (hatch part (both sides) shown below) of the switch in the direction indicated by the arrows. This could cause erroneous operation. Also, when using a metal installation board, please make allowance for burr direction designation and burr suppressing, etc., so that the burr side will not be on the switch installation side.

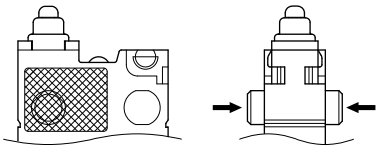

1) To secure the switch, please use an M3 small screw on a flat surface and tighten using a maximum torque of 0.29 N·m. It is recommended that both flat metal washer and spring washers be used with the screws and adhesive be applied to lock the screws to prevent loosening of the screws. Please make sure not to apply adhesive onto the moving parts.
2) Be sure to maintain adequate insulating clearance between each terminal and ground.
3) Although it is possible to directly operate the pin plunger type from the lateral direction, please consult us if doing so.
4) After mounting please make sure no tensile load will be applied to the switch terminals.
5) Range of possible use: Please set the operation position to within the ranges in the following table so that there is sufficient insulation distance and to maintain contact reliability.

Actuator	Plunger/lever free	
	From mounting boss and hole center line	From standoff
Pin plunger	>9.2 mm	>13.4 mm
Leaf lever	>10.7 mm	>14.9 mm
Simulated leaf lever	>13.5 mm	>17.7 mm

Actuator	Plunger/Lever pushed	
	From mounting boss and hole center line	From standoff
Pin plunger	7.8 to 5.9 mm	12.0 to 10.1 mm
Leaf lever	8.4 to 6.2 mm	12.6 to 10.4 mm
Simulated leaf lever	11.1 to 8.7 mm	15.3 to 12.9 mm

6) PC board terminal type should be used if the products are to be soldered on the PC board. Solder terminal type is not for soldering on PC board.

■ **Cautions regarding the circuit**

1) In order to prevent malfunction in set devices caused by bounce and chattering during the ON-OFF switch operation, please verify the validity of the circuit under actual operating conditions and temperature range.
2) When switching inductive loads (relays, solenoids, buzzers, etc.), an arc absorbing circuit is recommended to protect the contacts.

■ **Please verify under actual conditions.**

Please be sure to conduct quality verification under actual operating conditions in order to increase reliability during actual use.

■ **Selection of switch**

Please make your selection so that there will be no problems even if the operating characteristics vary up to ±20% from the standard values.

■ **Oil-proof and chemical-proof characteristics**

Do not use alcohol-based solvents.
The rubber cap swells when exposed to oil and chemicals. The extent of swelling will vary widely depending on the type and amount of oil and chemicals.
Check with the actual oil or chemicals used. In particular, be aware that solvents such as freon, chlorine, toluene, and cannot be used.

■ **Environment**

1) Although continuous operation of the switch is possible within the range of ambient temperature (humidity), as the humidity range differs depending on the ambient temperature, the humidity range indicated below should be used.
Continuous use near the limit of the range should be avoided.
2) This humidity range does not guarantee permanent performance.

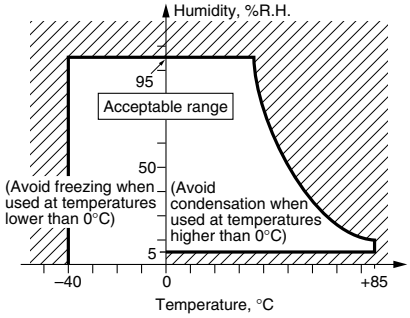

■ **Other**

Be careful when handling the switch to make sure that the rubber cap for sealing the plunger does not break.
1) Please remember that this switch cannot be used under water. Also, please be warned that switching and sudden temperature changes with the presence of water droplets can cause seepage into the switch.
2) Keep away from environments where silicon based adhesives, oil or grease are present as faulty contacts may result from silicon oxide. Do not use in areas where flammable or explosive gases from gasoline and thinner, etc., may be present.
3) When using the lever type, please be careful not to apply unreasonable load from the reverse or lateral directions of operation.
4) Do not exceed the total travel position (TTP) and press the actuator. This could cause operation failure. Also, when switching at high speed or under shock even within the operation limit, the working life may decrease. Therefore, please be sure to verify the quality under actual conditions of use.
5) Please make considerations so that the switch does not become the stopper for the moving part.
6) Please do not pull wire leads constantly.

© Panasonic Corporation 2017

Notes for Turquoise Switches (BJ, BS, BV type)

CAUTIONS FOR USE (Common for BJ, BS and BV types)

■ Fastening of the switch body

1) Fasten the switch body onto a smooth surface using the correct screw as shown in the chart below and tighten it with the prescribed torque.
The switch case may deform depending on the type of screw (screw head diameter, etc.), the size of the washer, and the use or non-use of a washer. Therefore, please confirm the appropriate torque of actual conditions. Also, it is recommended that adhesive be applied to lock the screws to prevent loosening of the screws. When doing so, please be careful not let any adhesive get inside the switch.

	Screws	Tightening torque
ABJ (BJ) switches	M1.2	Not more than 0.098N·m
	M2.3	Not more than 0.29N·m
	M3.0	Not more than 0.29N·m
ABS (BS) switches	M2.3	Not more than 0.29N·m
ABV (BV) switches	M3.0	Not more than 0.49N·m

2) Fixed pin type
To secure the switch unit, thermally crimp or press-fit the mounting pins. If the pins are to be press-fitted, install a guide on the opposite surface to the mounting pins to prevent them from slipping out of position and developing play.
3) Be sure to maintain adequate insulating clearance between each terminal and ground.
4) The positioning of the switch should be such that direct force is not applied to the pushbutton or actuator in its free position. The operating force to the pushbutton should only be applied in a perpendicular direction.
5) The standard value of overtravel used should be within the range of 70% to 100% of the rated OT value.
6) When soldering the BV type turquoise switch or the immersion protected type of the BJ and BS type switches, the sealing material sometimes forms a lump or bulge at the base of the terminal or lead. Be sure to allow enough space for this when attaching the switch.

■ Soldering operations

1) Manual soldering: Perform soldering in less than 3 seconds with maximum 350°C iron. Care should be taken not to apply force to the terminals during soldering. We recommend a soldering iron with temperature adjustment in order to prevent poor quality soldering.
Please consult us if you intend to use a soldering iron of 60 W or higher.
2) Terminal portions should not be moved within 1 minute after soldering.

	Soldering time
ABJ (BJ) switches	Within 3 seconds
ABS (BS) switches	Within 3 seconds
ABV (BV) switches	Within 5 seconds

■ Selection of the switch

Allow for up to ±20% variation of the specified characteristics values to compensate for long term operational wear of the switch in your design.

■ Cautions regarding use

1) When switching inductive loads (relays, solenoids, buzzers, etc.), an arc absorbing circuit is recommended to protect the contacts.
2) If switching of the contact is synchronized with the phase of the AC power, reduced electrical life or welded contact may occur. Therefore, test the switch while it is operating under actual loads for this condition. If found, you may wish to take corrective action in your design.
3) In the slow or high speed operating condition, the electrical life might be greatly reduced depending upon the switching load. Please consult us before use.
4) Using lever type in do not condition, there is the concern that the flexible part may be impeded and return movement may not be possible. In this situation take the following precautions:
• Select a product of higher OF or use a leaf type lever.
• Attach a protective cover to the lever.
5) If the leaf lever type switch is excessively pushed (pushed further than the operational limit position) or switching is done at high speed or is accompanied by the impact, the lever will break. Please be careful. Also, be careful with the short roller lever type ABV (BV) switch as improper return may result from pressing too much.

■ Protection from dust, water and corrosive gas

1) The pin button and the space around the body cap Turquoise switches are sealed with elastic material, the terminal portion is integrally molded. This prevents dust entry and protects the switch against corrosive gases. Wireleaded types are recommended for applications subject to water or oil splash. However, avoid soaking these immersion protected types in oil or water, because those types are not of completely oil tight construction.
2) Switch operation or rapid temperature change while water droplets are on the switch may cause the water invasion inside the switch because of breathing action on condensation. Especially do not use switch in a bath.
If sources of silicon gas are existing in the vicinity of the switch (silicon rubber, silicon oil, silicon coating, and silicon filler, etc.), silicon gas (low molecular siloxane, etc.) will be emitted and it will get into the product due to the permeability of the plastic. If the switch is used or stored in such an environment, silicon compound might generate on the contacts, cause the and faulty contacting. Therefore, please do not use sources that can emit silicon gas in the vicinity of the switch.
Do not use in areas where flammable or explosive gases from gasoline and thinner, etc., may be present.

© Panasonic Corporation 2015

• Dust protection test
Test conditions: The talcum powder used shall be able to pass through a square- meshed sieve the nominal wire diameter of 7 μm. The amount of talcum powder to be used is 2 kg per cubic metre of the test chamber volume. The duration of the test is 8 hours.
No damage observed after the test.

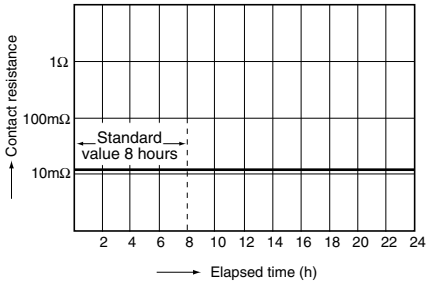

• Waterproof test
Test conditions: Immersion protected IP67 switches ...
Submerge at 1 m below the water surface for 30 minutes.

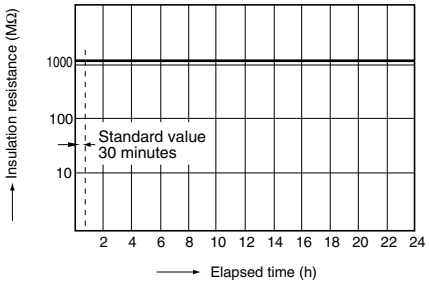

• Hydrogen sulfide exposure test
Test conditions: Concentration: 3 ppm, Temperature: 40°C 104°F, Humidity: 75% RH

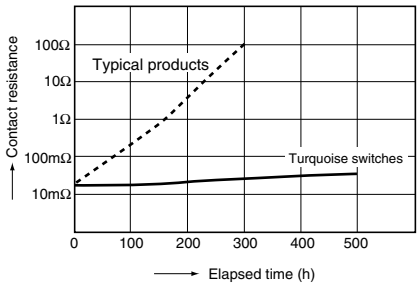

■ Oil-proof and chemical-proof characteristics
The rubber elastomer swells when exposed to oil and chemicals. The extent of swelling will vary widely depending on the type and amount of oil and chemicals.
Check with the actual oil or chemicals used.
In particular, be aware that solvents such as freon, chlorine, and toluene cannot be used.

■ Washability [ABJ (BJ) and ABS (BS)]
Do not clean the switch. Doing so can cause problems. Please contact us if cleaning is necessary.

REFERENCE

■ Dust-protected type
This type of construction prevents dust that is large enough to have an effect on operation from getting inside the unit. This construction is stipulated by protective classes against solid matter in the IEC standards (IEC60529).
The talcum powder used shall be able to pass through a square-meshed sieve the nominal wire diameter of 7 μm. The amount of talcum powder to be used is 2 kg per cubic metre of the test chamber volume. The duration of the test is 8 hours.
No damage observed after the test.

■ Immersion-protected type
This type of construction prevents any harmful effects even after the device is left underwater at a depth of 1 m for 30 minutes. This construction is stipulated by protective classes against water in the IEC standards (IEC60529).

■ IEC's IP Codes
The IEC (International Electrotechnical Commission) has defined the IP characteristic code that represents the levels of protection described in IEC standard (IEC60529).
The two numbers that follow the IP code (the characteristics numbers) indicate the suitability of this protection for all environmental conditions.

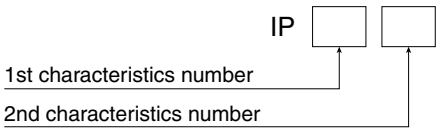

• Level of protection indicated by the 1st Characteristics number

1st Characteristics number	Protection level (IEC60529/Solid matter)
0	No protection
1	Protected against solid matter larger than 50mm
2	Protected against solid matter larger than 12mm
3	Protected against solid matter larger than 2.5mm
4	Protected against solid matter larger than 1.0mm
5	Dust-protected type Prevents dust that is large enough to have an effect on operation from getting inside the unit
6	Dust-resistant type Prevents dust from getting inside the unit

• Level of protection indicated by the 2nd Characteristics number

JIS C0920	2nd Characteristics number	Protection level (IEC60529/Liquid matter)
	0	No protection
Droplet-protected type I	1	Protected against water droplets that fall perpendicular to the unit
Droplet-protected type II	2	Protected against water droplets that fall from within 15° of perpendicular to the unit
Rain-protected type	3	Protected against water droplets that fall from within 60° of perpendicular to the unit
Splash-protected type	4	Protected against water that splashes on the unit from any direction
Spray-protected type	5	Free from adverse effects even if sprayed directly with water from any direction
Water-resistant type	6	Protected against water sprayed directly on the unit from any direction
Immersion-protected type	7	Water does not get inside of the unit when submerged in water according to the specified conditions
Underwater type	8	Unit can be used underwater

Note: Details of test conditions are the same as NECA C 0920. Please refer to them.

© Panasonic Corporation 2015