CUI Devices is now Same Sky! Learn More



# SERIES: AMT33 | DESCRIPTION: MODULAR COMMUTATION ENCODER

## FEATURES

- patented capacitive ASIC technology
- low power consumption
- U, V, W commutation phase channels
- 2, 4, 6, 8, 10, 12, 20 motor poles w/ incremental resolutions up to 4096 PPR
- resolutions and poles programmable with AMT Viewpoint™ PC software
- differential line driver versions
- digitally set zero position with AMT One Touch Zero™ module or serial commands
- compact modular package with locking hub for ease of installation
- radial and axial cable connections
- -40~125°C operating temperature

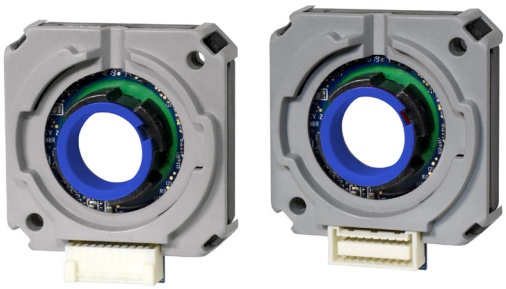

## ELECTRICAL

| parameter | conditions/description | min | typ | max | units |
|---|---|---|---|---|---|
| power supply | VDD | 4.5 | 5 | 5.5 | V |
| start-up time[1] | | | 200 | | ms |
| current consumption | with unloaded output | | 16 | | mA |
| single ended channels | output high level | VDD-0.1 | | | V |
| | output low level | | | 0.1 | V |
| | output current (per channel) | | | 15 | mA |
| | rise/fall time | | 8 | | ns |
| differential channels | output high level | 3 | | | V |
| | output low level | | | 0.1 | V |
| | output current (per channel) | | | 20 | mA |
| | rise/fall time | 7 | 11 | 20 | ns |

Note: 1. Encoder must be stationary during start-up.

## INCREMENTAL CHARACTERISTICS

| parameter | conditions/description | min | typ | max | units |
|---|---|---|---|---|---|
| waveform | CMOS voltage square wave | | | | |
| phase difference | A leads B for CCW rotation (viewed from front) | | 90 | | degrees |
| quadrature resolutions[2] | 48, 96, 100, 125, 192, 200, 250, 256, 360, 384, 400, 500, 512, 768, 800, 1000, 1024, 1600, 2000, 2048, 2500, 4096 | | | | PPR |
| index[3] | one pulse per 360 degree rotation | | | | |
| accuracy | | | 0.2 | | degrees |
| quadrature duty cycle (at each resolution) | 48, 96, 100, 125, 192, 256, 384 | 49 | 50 | 51 | % |
| | 200, 250, 360, 400, 768, 800 | 48 | 50 | 52 | % |
| | 500, 1000, 1600 | 46 | 50 | 54 | % |
| | 512, 1024 , 2048, 4096 | 50 | 50 | 50 | % |
| | 2000 | 44 | 50 | 56 | % |
| | 2500 | 43 | 50 | 57 | % |

Notes: 2. Resolutions programmed with AMT Viewpoint™ PC software. Default resolution set to 2048 PPR. Listed as pre-quadrature, meaning final number of counts is PPR x 4.
3. Zero position alignment set with AMT One Touch Zero™ module, AMT Viewpoint™ PC software, or serial commands.

## COMMUTATION CHARACTERISTICS

| parameter | conditions/description | | min | typ | max | units |
|---|---|---|---|---|---|---|
| channels | CMOS Voltage (S)<br>Line Driver (D) | A, B, Z, U, V, W<br>A, Ā, B, B̄, Z, Z̄, U, Ū, V, V̄, W, W̄ | | | | |
| motor poles[4] | 2, 4, 6, 8, 10, 12, 20 | | | | | |
| waveform[4] | CMOS voltage square wave | | | | | |
| phase difference | WYE motor winding configurations | | | 120 | | electrical degrees |

Notes: 4. Pole counts and waveform direction set via AMT Viewpoint™ PC software. Default poles set to 4 poles and counter-clockwise direction.

## MECHANICAL

| parameter | conditions/description | min | typ | max | units |
|---|---|---|---|---|---|
| motor shaft length | | 13.5 | | | mm |
| motor shaft tolerance | | | NOM +0/-0.015 | | mm |
| weight | weight varies by configuration | | 26 | | g |
| axial play | | | | ±0.3 | mm |
| hub set screw to shaft torque | set screw size: M2.5x0.45 | | 3 | | in-lb |
| rotational speed (at each resolution) | 48, 96, 100, 125, 192, 200, 250, 256, 384, 400, 500, 512, 800, 1000, 1024, 2048 | | | 8000 | RPM |
| | 360, 768, 1600, 2000, 4096 | | | 4000 | RPM |
| | 2500 | | | 2500 | RPM |

## ENVIRONMENTAL

| parameter | conditions/description | min | typ | max | units |
|---|---|---|---|---|---|
| operating temperature | | -40 | | 125 | °C |
| humidity | non-condensing | | | 85 | % |
| vibration | 10~500 Hz, 5 minute sweep, 2 hours on each XYZ | | | 5 | G |
| shock | 3 pulses, 6 ms, 3 on each XYZ | | | 200 | G |
| RoHS | yes | | | | |

## SERIAL INTERFACE

| parameter | conditions/description | min | typ | max | units |
|---|---|---|---|---|---|
| protocol | serial UART | | | | |
| controller | Driven by onboard Microchip PIC18F25K80. See Microchip documentation for additional details. | | | | |
| data rate | 8 data bits, no parity, 1 stop bit, least significant bit first | | 115200 | | baud |

## WAVEFORMS

**Figure 1**

Quadrature signals with index showing counter-clockwise rotation

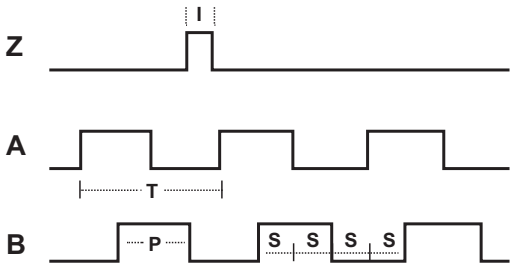


The following parameters are defined by the resolution selected for each encoder. The encoders resolution is listed as Pulses Per Revolution (PPR), which is the number of periods (or high pulses) over the encoders revolution.

| Parameter | Description | Expression | Units | Notes |
|---|---|---|---|---|
| PPR | resolution | | Pulses Per Revolution | This is the user selected value and the format all resolutions are listed in |
| CPR | counts | PPR x 4 | Counts Per Revolution | This is the number of quadrature counts the encoder has |
| T | period | 360/R | mechanical degrees | |
| P | pulse width | T/2 | mechanical degrees | |
| S | A/B state width | T/4 | mechanical degrees | This is the width of a quadrature state |
| I | index width | T/4 | mechanical degrees | The width of a once per turn index is the state width for A & B lines |

Note: For more information regarding PPR, CPR, or LPR (Lines Per Revolution) view https://www.sameskydevices.com/blog/what-is-encoder-ppr-cpr-and-lpr

**Figure 2**

Commutation signals with index (The programmable direction setting dictates in which direction of rotation U will lead V, and V will lead W)

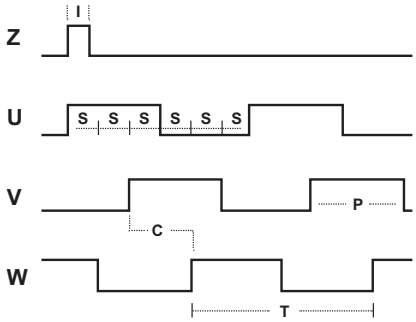


The following parameters are defined by the resolution and pole count selected for each encoder, where PPR = resolution and M = motor poles.

| Parameter | Description | Expression | Units |
|---|---|---|---|
| T | period | 360/M | mechanical degrees |
| P | pulse width | T/2 | mechanical degrees |
| I | index width | 360/(PPR*4) | mechanical degrees |
| S | U/V/W state width | 60 | electrical degrees |
| | | T/6 | mechanical degrees |
| C | phase spacing | 120 | electrical degrees |
| | | T/3 | mechanical degrees |

## PART NUMBER KEY

For customers that prefer a specific AMT33 configuration, please reference the custom configuration key below.

**AMT33 X X - XXXX - XXXX - XX - XX - X**

Base Number

Orientation:
2 = Radial
3 = Axial

Output Signals:
S = CMOS Voltage
D = Line Driver

Quadrature Resolution (PPR):

| | |
|---|---|
| 0048 | 0500 |
| 0096 | 0512 |
| 0100 | 0768 |
| 0125 | 0800 |
| 0192 | 1000 |
| 0200 | 1024 |
| 0250 | 1600 |
| 0256 | 2000 |
| 0360 | 2048 |
| 0384 | 2500 |
| 0400 | 4096 |

Bore Diameter:
9000 = 9 mm
9525 = 3/8''
1000 = 10 mm
1100 = 11 mm
1200 = 12 mm
1270 = 1/2”
1300 = 13 mm
1400 = 14 mm
1500* = 15 mm
1587 = 5/8”

Motor Poles:

| | |
|---|---|
| 02 | 10 |
| 04 | 12 |
| 06 | 20 |
| 08 | |

Direction:
“blank” = CCW
CW = clockwise

Mounting Base:
S = Standard
W** = Wide

*15 mm bore diameter option only available as custom configuration.
**Wide base not included in kits.

## AMT33-V KITS

In order to provide maximum flexibility for our customers, the AMT33 series is provided in kit form standard. This allows the user to implement the encoder into a range of applications using one sku#, reducing engineering and inventory costs. AMT33 kit includes all items shown below.

### ORDERING GUIDE

**AMT33XX-V**

Orientation:
2 = Radial
3 = Axial

Output Signals:
S = CMOS Voltage
D = Line Driver

| SHAFT ADAPTERS | | | | | | | |
|---|---|---|---|---|---|---|---|
| 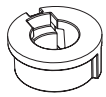 | 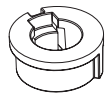 | 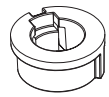 | 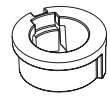 | 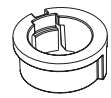 | 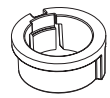 | 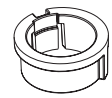 | 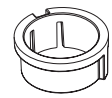 |
| 9 mm | 3/8 in | 10 mm | 11 mm | 12 mm | 1/2 in | 13 mm | 14 mm |
| Light Blue | Orange | Purple | Gray | Yellow | Green | Red | Blue |

| AMT33 | ALIGNMENT TOOL* | PLACEMENT TOOL | ALLEN WRENCH |
|---|---|---|---|
| 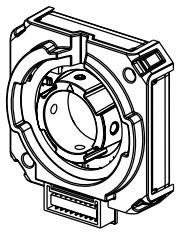 Shaft adapter is not needed for 5/8" shaft | 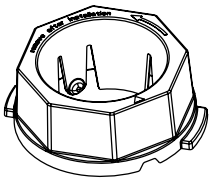 | 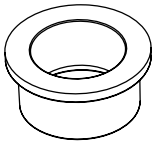 | |

*Alignment Tool comes pre-installed on all AMT33 Series.

# ENCODER INTERFACE

| CONNECTOR PINOUT | | | | |
|---|---|---|---|---|
| | Function | | | |
| **#** | **AMT332S** | **AMT333S** | **AMT332D** | **AMT333D** |
| 1 | RX_ENC+ | RX_ENC+ | RX_ENC+ | RX_ENC+ |
| 2 | TX_ENC+ | TX_ENC+ | TX_ENC+ | TX_ENC+ |
| 3 | U+ | U+ | U+ | U+ |
| 4 | GND | GND | GND | GND |
| 5 | W+ | W+ | W+ | W+ |
| 6 | +5 V | +5 V | +5 V | +5 V |
| 7 | V+ | V+ | V+ | V+ |
| 8 | A+ | A+ | A+ | A+ |
| 9 | N/A | N/A | A- | A- |
| 10 | B+ | B+ | B+ | B+ |
| 11 | N/A | N/A | B- | B- |
| 12 | Z+ | Z+ | Z+ | Z+ |
| 13 | N/A | N/A | Z- | Z- |
| 14 | MCLR | MCLR | MCLR | MCLR |
| 15 | N/A | N/A | W- | W- |
| 16 | N/A | N/A | V- | V- |
| 17 | N/A | N/A | U- | U- |
| 18* | NOISE GND | NOISE GND | NOISE GND | NOISE GND |

*Pin 18 is not connected internally for standard encoders. Contact Same Sky for support with high noise applications.

**AMT332**

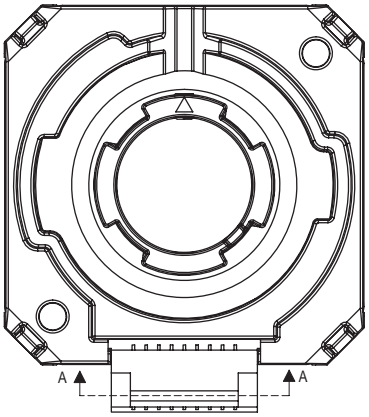


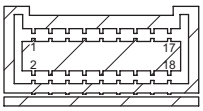


SECTION A-A
SCALE 2 : 1

**AMT333**

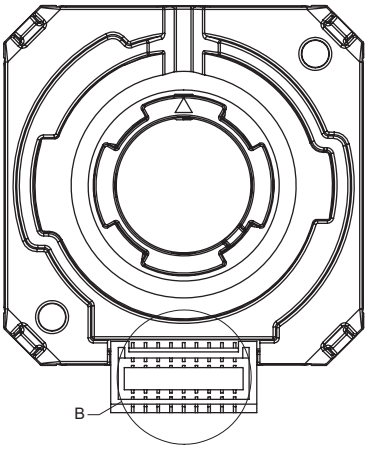


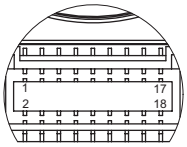


DETAIL B
SCALE 2 : 1

Mating Connector:
JST ZPDR-18V-S

## MECHANICAL DRAWING

units: mm
tolerance:
X.XX ±0.25 mm
hole dia: ±0.08 mm

**AMT332**

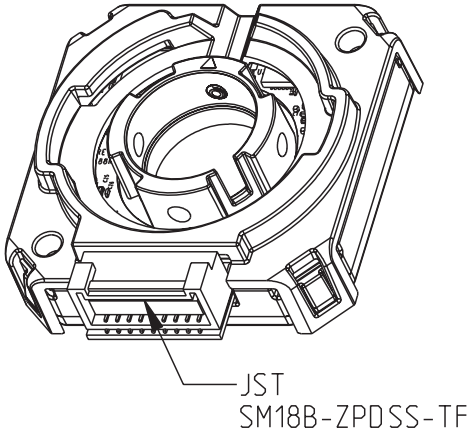


**AMT333**

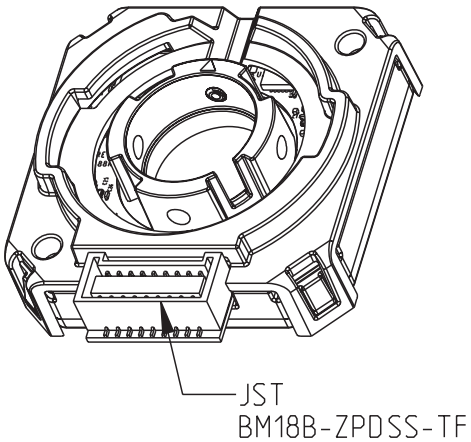


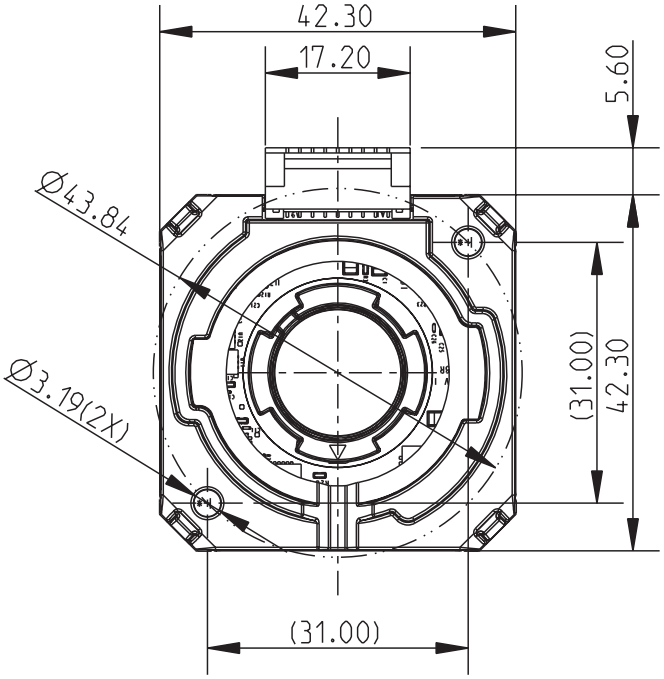


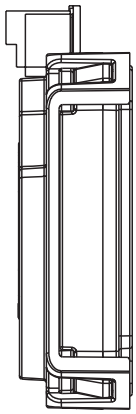

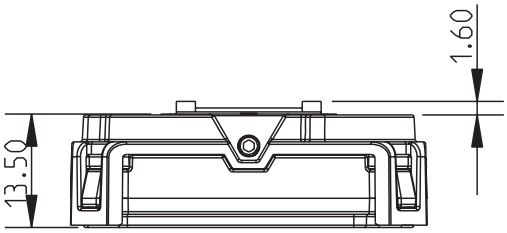


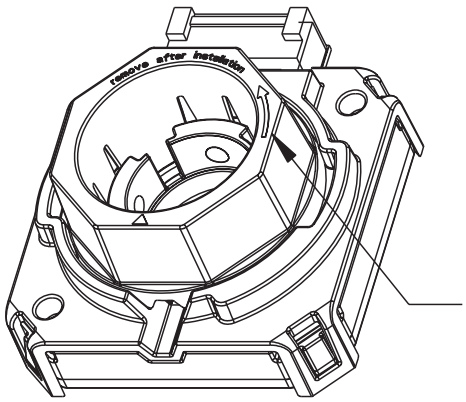

## MECHANICAL DRAWING (WIDE BASE)

units: mm
tolerance:
X.XX ±0.25 mm
hole dia: ±0.08 mm

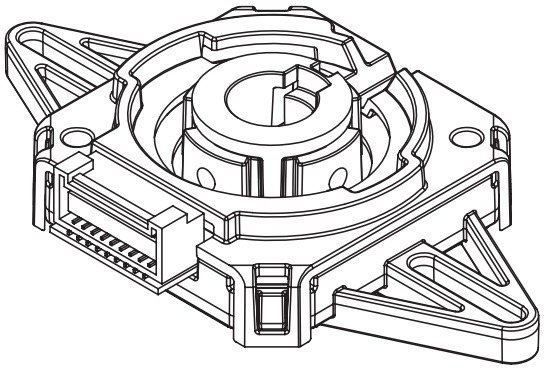

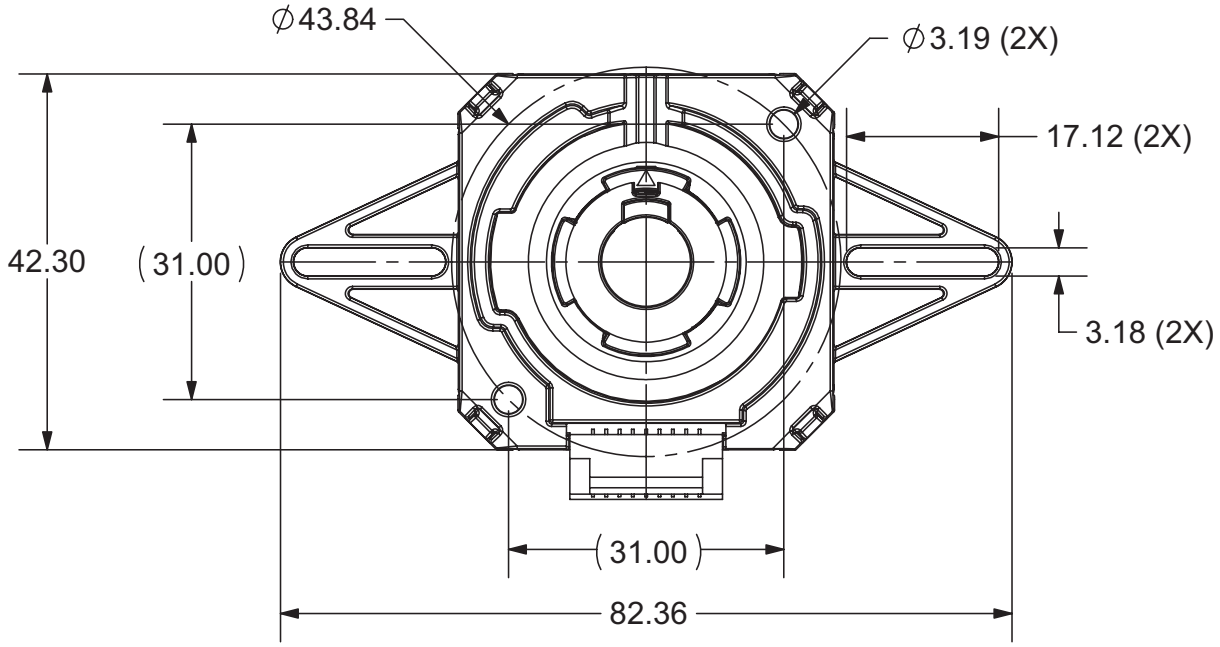


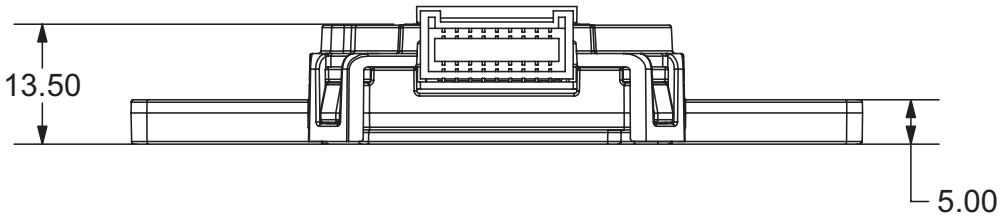

# ASSEMBLY PROCEDURE

## STEP 1

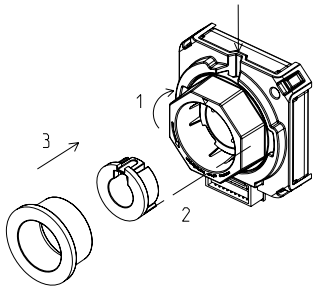


1. Begin by rotating the pre-installed alignment tool clockwise and completely to the right so that the pre-installed shaft set screw is visible.
2. Select the appropriately sized shaft adapter and insert it into the encoder making sure the adapter is properly aligned with the keyway in the metal hub. No adapter is needed for a 5/8" motor shaft.
3. Select the placement tool and insert it into the encoder. This placement tool holds the encoder's hub and shaft adapter in the proper position for installation onto the motor shaft.

## STEP 2

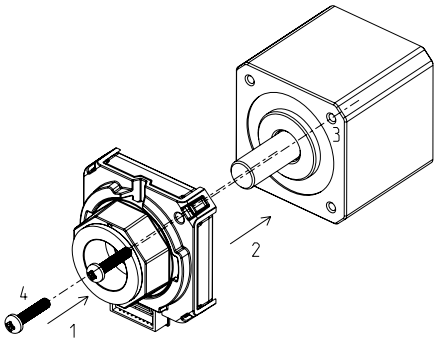


1. Slide the encoder onto the motor shaft applying force only to the placement tool to maintain proper alignment of the encoder's hub and shaft adapter.
2. Press until the encoder sits flush with the motor body.
3. Once in contact with the motor body, rotate the encoder until the mounting holes are aligned with the proper bolt circle.
4. Insert screws and fasten the encoder to the motor.

## STEP 3

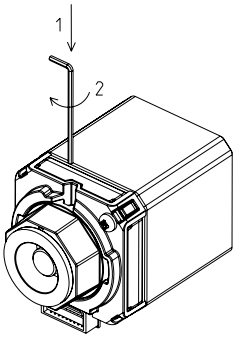


1. Insert the Allen Wrench into the notch on the top.
2. Tighten the shaft set screw to the recommended torque settings per the spec.

## STEP 4

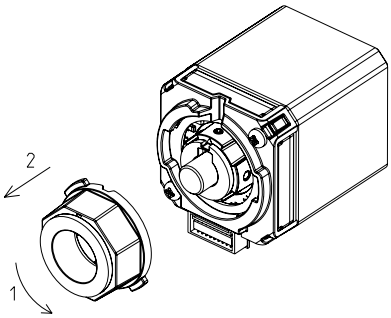


1. Rotate the placement tool and alignment tool counterclockwise until the tabs align with the openings.
2. Remove both tools from the encoder.
3. When installation is finished, the motor shaft should be rotating freely.

# APPLICATION NOTES

## SERIAL INTERFACE

The AMT33 series encoder is designed to operate with a serial UART interface. This interface allows the encoder to be configured and programmed by the AMT Viewpoint™ application. Along with programming, the AMT Viewpoint™ application uses the serial interface for diagnostics and motor pole alignment. Below are instructions on how to use the serial interface for position zeroing.

**Table 1**

Serial Commands

| Command | Action | Use |
|---|---|---|
| 0 | This command sends an ascii '0' (hex value 0x30). | This zeros the encoder and sets the index at the current angular position along with the rising edge of the commutation channel U. This position is stored in non-volatile memory and will remain present until a zero command is set again or the encoder is reprogrammed via the AMT Viewpoint™ application. |
| Q | This command sends an ascii 'Q' (hex value 0x51). | This command restarts the encoder as if it were power cycled. |

**Table 2**

Serial Pins

| Pin | Description | Connection |
|---|---|---|
| TX_ENC+ | This is the pin that the encoder transmits serial data on. | Connect this pin to the receiver input of your serial/UART interface. |
| RX_ENC+ | This is the pin that the encoder receives serial commands on. | Connect this pin to your serial/UART interface transmitter output. |
| MCLRB | This pin is used to force the encoder into reset for reprogramming via the AMT Viewpoint™ application. | Connection of this pin is not required for the above serial commands. |

The serial interface operates at 115200 baud with 8 data bits, no parity, and 1 stop bit, and 1 start bit. This is the standard UART protocol. Data lines TX_ENC+ and RX_ENC+ are high when inactive.

**Figure 3**

Serial Timing Diagram

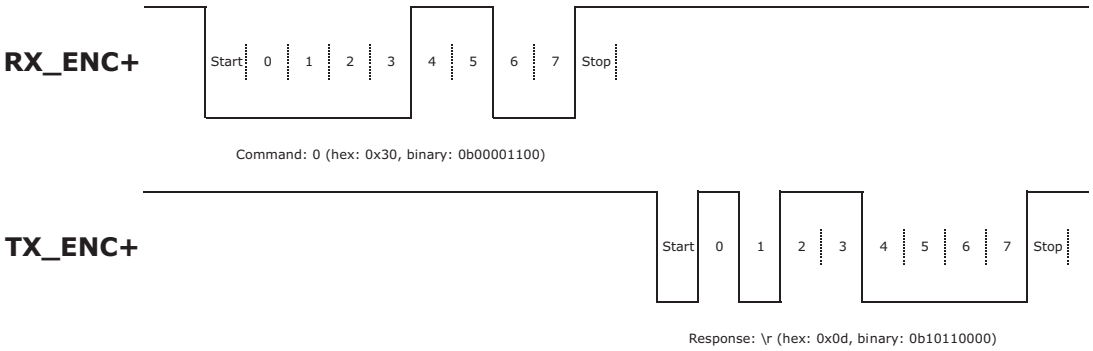

# APPLICATION NOTES (CONTINUED)

## COMMUTATION ALIGNMENT AND ZERO POSITION

The AMT33 series encoder requires minimal setup time for brushless DC (BLDC) motor applications. Installation can be completed with either a PC with the AMT Viewpoint™ application installed, an AMT-OTZ-1 zero alignment module, or any 5V serial interface. The following steps explain the proper commutation alignment procedure for the AMT33 encoder.

1. Ensure AMT33 encoder is set for correct pole count. To verify or change settings use the AMT Viewpoint™ software.
2. Mount encoder following AMT Assembly procedure.
3. Use the motor manufacturer's documentation to determine the correct motor phase to energize for alignment. Energized phase will coincide with the rising edge of the AMT33 encoders 'U' signal. This typically means energizing phase 1 by applying positive voltage to the wire labeled 'phase 1', and grounding the wire labeled 'phase 2'. The third wire always remains unconnected.
4. Using a power supply, energize the two wires found previously. This will lock the rotor into a fixed position.
5. Connect AMT33 encoder to an AMT-OTZ-1 zero alignment module, the AMT Viewpoint™ application, or any suitable 5V serial interface.
6. Use any of the connected devices to issue an alignment command to the encoder. This will digitally set the rising edge of 'U' and the 'Z' index to the current angular position.
7. Remove power from motor phase windings; connect motor and encoder to proper motor driver.
8. If the above is done correctly your AMT33 encoder is now ready for operation. As a verification of alignment you may power the encoder, and use an oscilloscope to monitor phase 1 of the motor and the 'U' channel of the encoder as you hand spin the motor. If alignment is correct, the square wave generated on the 'U' channel will overlap perfectly with the sine wave generated by phase 1 of the motor. If alignment does not match, recheck motor documentation and retry alignment procedure.

## REVISION HISTORY

| rev. | description | date |
|---|---|---|
| 1.0 | initial release | 06/21/2019 |
| 1.01 | brand update | 10/04/2019 |
| 1.02 | updated quadrature duty cycle details | 10/08/2020 |
| 1.03 | added motor shaft tolerance details, updated start-up details | 09/10/2021 |
| 1.04 | logo, datasheet style update | 08/05/2022 |
| 1.05 | added wide base version | 01/17/2023 |
| 1.06 | CUI Devices rebranded to Same Sky | 09/12/2024 |
| 1.07 | added connector pin numbers | 06/24/2025 |

The revision history provided is for informational purposes only and is believed to be accurate.

Same Sky offers a one (1) year limited warranty. Complete warranty information is listed on our website.

Same Sky reserves the right to make changes to the product at any time without notice. Information provided by Same Sky is believed to be accurate and reliable. However, no responsibility is assumed by Same Sky for its use, nor for any infringements of patents or other rights of third parties which may result from its use.

Same Sky products are not authorized or warranted for use as critical components in equipment that requires an extremely high level of reliability. A critical component is any component of a life support device or system whose failure to perform can be reasonably expected to cause the failure of the life support device or system, or to affect its safety or effectiveness.