CUI Devices is now Same Sky! Learn More

SERIES: AMT13A | DESCRIPTION: MODULAR INCREMENTAL ENCODER

FEATURES

- patented capacitive ASIC technology
- low power consumption
- incremental resolutions up to 4096 PPR
- differential line driver versions
- compact modular package with locking hub for ease of installation
- radial and axial cable connections
- -40~125°C operating temperature

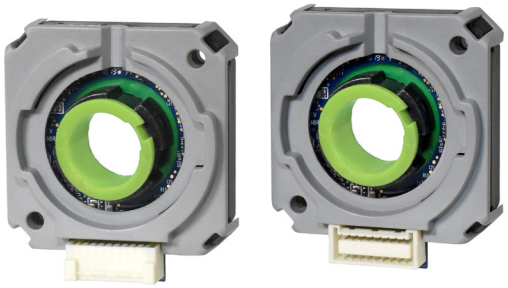

ELECTRICAL

parameter	conditions/description	min	typ	max	units
power supply	VDD	4.5	5	5.5	V
start-up time[1]			200		ms
current consumption	with unloaded output		8		mA
single ended channels	output high level	VDD-0.1			V
	output low level			0.1	V
	output current (per channel)			15	mA
	rise/fall time		8		ns
differential RS-422 channels	output high level	3			V
	output low level			0.1	V
	output current (per channel)			25	mA
	rise/fall time	7	11	20	ns

Note: 1. Encoder must be stationary during start-up.

INCREMENTAL CHARACTERISTICS

parameter	conditions/description		min	typ	max	units
channels	CMOS Voltage (S)	A, B				
	Quadrature Line Driver (Q)	A, $\bar{A}$, B, $\bar{B}$				
waveform	CMOS voltage square wave					
phase difference	A leads B for CCW rotation (viewed from front)					
quadrature resolutions[2]	96, 192, 200, 250, 384, 400, 500, 512 768, 800, 1000, 1024, 1600, 2000, 2048, 4096					PPR
accuracy				0.2		degrees
quadrature duty cycle (at each resolution)	96, 192, 384		49	50	51	%
	200, 250, 400, 768, 800		48	50	52	%
	500, 1000, 1600		46	50	54	%
	512, 1024 , 2048, 4096		50	50	50	%
	2000		44	50	56	%

Notes: 2. Default resolution set to 4096 PPR. All resolutions are listed as pre-quadrature, meaning the final number of counts is PPR x 4.

MECHANICAL

parameter	conditions/description	min	typ	max	units
motor shaft length		13.5			mm
motor shaft tolerance			NOM +0/-0.015		mm
weight	weight varies by configuration		26		g
hub set screw to shaft torque	set screw size: M2.5x0.45		3		in-lb
axial play				±0.3	mm
rotational speed (at each resolution)	96, 192, 200, 250, 384, 400, 500, 512, 800, 1000, 1024, 2048			8000	RPM
	768, 1600, 2000, 4096			4000	RPM

ENVIRONMENTAL

parameter	conditions/description	min	typ	max	units
operating temperature		-40		125	°C
humidity	non-condensing			85	%
vibration	10~500 Hz, 5 minute sweep, 2 hours on each XYZ			5	G
shock	3 pulses, 6 ms, 3 on each XYZ			200	G
RoHS	yes				

WAVEFORMS

Figure 1

Quadrature signals with index showing counter-clockwise rotation

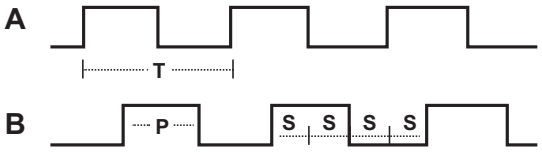

The following parameters are defined by the resolution selected for each encoder. The encoders resolution is listed as Pulses Per Revolution (PPR), which is the number of periods (or high pulses) over the encoders revolution.

Parameter	Description	Expression	Units	Notes
PPR	resolution		Pulses Per Revolution	This is the user selected value and the format all resolutions are listed in
CPR	counts	PPR x 4	Counts Per Revolution	This is the number of quadrature counts the encoder has
T	period	360/R	mechanical degrees	
P	pulse width	T/2	mechanical degrees	
S	A/B state width	T/4	mechanical degrees	This is the width of a quadrature state

Note: For more information regarding PPR, CPR, or LPR (Lines Per Revolution) view https://www. sameskydevices.com/blog/what-is-encoder-ppr-cpr-and-lpr

PART NUMBER KEY

For customers that prefer a specific AMT13A configuration, please reference the custom configuration key below.

AMT13A X X - XXXX - XXXX - X

Base Number

Orientation:
2 = Radial
3 = Axial

Output Signals:
S = CMOS Voltage
Q = Quadrature Line Driver

Quadrature Resolution (PPR):

0096	0768
0192	0800
0200	1000
0250	1024
0384	1600
0400	2000
0500	2048
0512	4096

Bore Diameter:
9000 = 9 mm
9525 = 3/8"
1000 = 10 mm
1100 = 11 mm
1200 = 12 mm
1270 = 1/2"
1300 = 13 mm
1400 = 14 mm
1500* = 15 mm
1587 = 5/8"

Mounting Base:
S = Standard
W** = Wide

*15 mm bore diameter option only available as custom configuration.
**Wide base not included in kits.

AMT13A-V KITS

In order to provide maximum flexibility for our customers, the AMT13A series is provided in kit form standard. This allows the user to implement the encoder into a range of applications using one sku#, reducing engineering and inventory costs. AMT13A kit includes all items shown below.

ORDERING GUIDE

AMT13AXX-V

Orientation:
2 = Radial
3 = Axial

Output Signals:
S = CMOS Voltage
Q = Quadrature Line Driver

SHAFT ADAPTERS

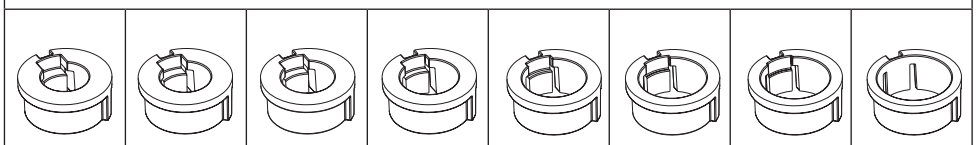

9 mm	3/8 in	10 mm	11 mm	12 mm	1/2 in	13 mm	14 mm
Light Blue	Orange	Purple	Gray	Yellow	Green	Red	Blue

AMT13A	ALIGNMENT TOOL*	PLACEMENT TOOL	ALLEN WRENCH
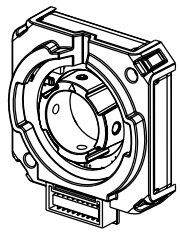 Shaft adapter is not needed for 5/8" shaft	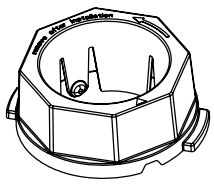	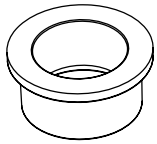	

*Alignment Tool comes pre-installed on all AMT13A Series.

RESOLUTION SETTINGS

1 = On, 0 = Off

Resolution (PPR)	Maximum RPM	1	2	3	4
4096	4000	0	0	0	0
2048	8000	0	0	1	0
2000	4000	1	0	0	0
1600	4000	0	1	0	0
1024	8000	0	0	0	1
1000	8000	1	0	1	0
800	8000	0	1	1	0
768	4000	1	1	0	0
512	8000	0	0	1	1
500	8000	1	0	0	1
400	8000	0	1	0	1
384	8000	1	1	1	0
250	8000	1	0	1	1
200	8000	0	1	1	1
192	8000	1	1	0	1
96	8000	1	1	1	1

DIP switch:
Example setting: 1000 PPR

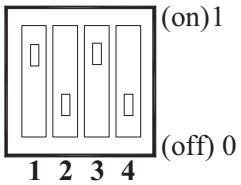

ENCODER INTERFACE

CONNECTOR PINOUT				
Function				
#	AMT13A2S	AMT133AS	AMT13A2Q	AMT13A3Q
1	N/A	N/A	N/A	N/A
2	N/A	N/A	N/A	N/A
3	N/A	N/A	N/A	N/A
4	GND	GND	GND	GND
5	N/A	N/A	N/A	N/A
6	+5 V	+5 V	+5 V	+5 V
7	N/A	N/A	N/A	N/A
8	A+	A+	A+	A+
9	N/A	N/A	A-	A-
10	B+	B+	B+	B+
11	N/A	N/A	B-	B-
12	N/A	N/A	N/A	N/A
13	N/A	N/A	N/A	N/A
14	N/A	N/A	N/A	N/A
15	N/A	N/A	N/A	N/A
16	N/A	N/A	N/A	N/A
17	N/A	N/A	N/A	N/A
18*	NOISE GND	NOISE GND	NOISE GND	NOISE GND

*Pin 18 is not connected internally for standard encoders. Contact Same Sky for support with high noise applications.

AMT13A2

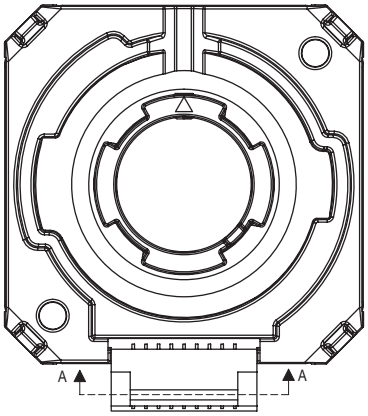

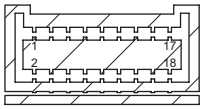

SECTION A-A
SCALE 2 : 1

AMT13A3

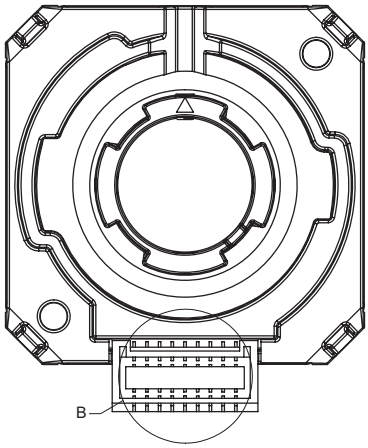

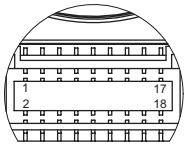

DETAIL B
SCALE 2 : 1

Mating Connector:
JST ZPDR-18V-S

MECHANICAL DRAWING

units: mm
tolerance:
X.XX ±0.25 mm
hole dia: ±0.08 mm

AMT13A2

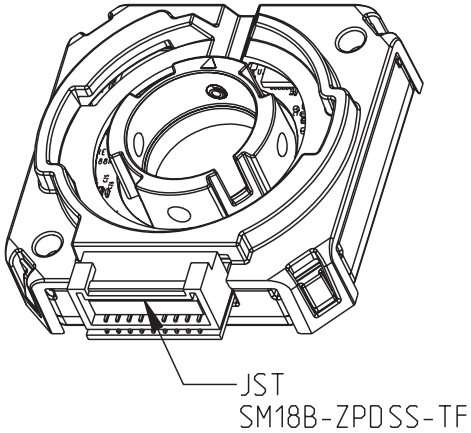

AMT13A3

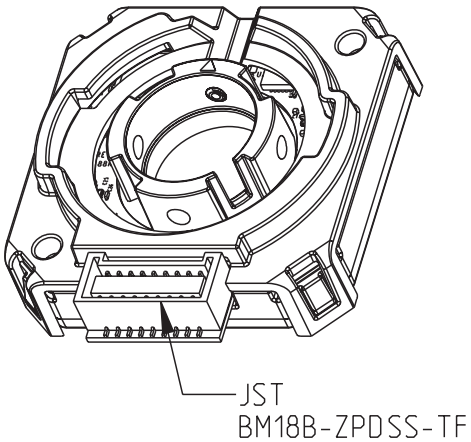

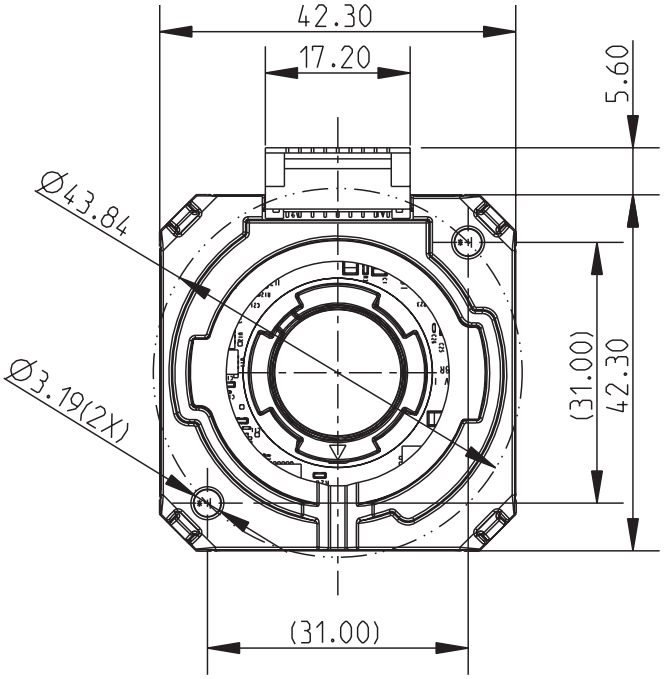

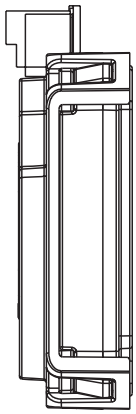

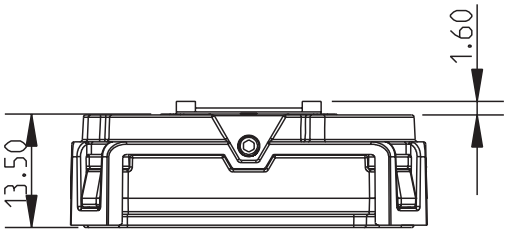

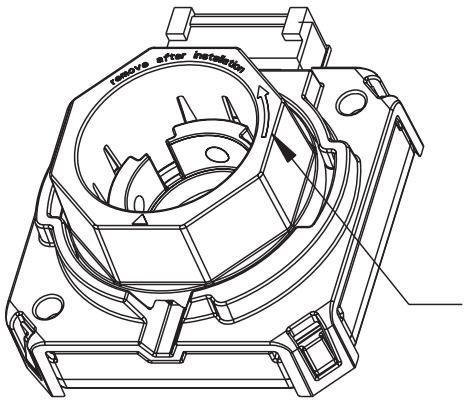

MECHANICAL DRAWING (WIDE BASE)

units: mm
tolerance:
X.XX ±0.25 mm
hole dia: ±0.08 mm

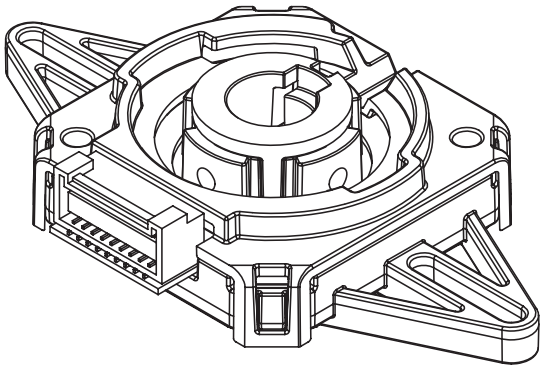

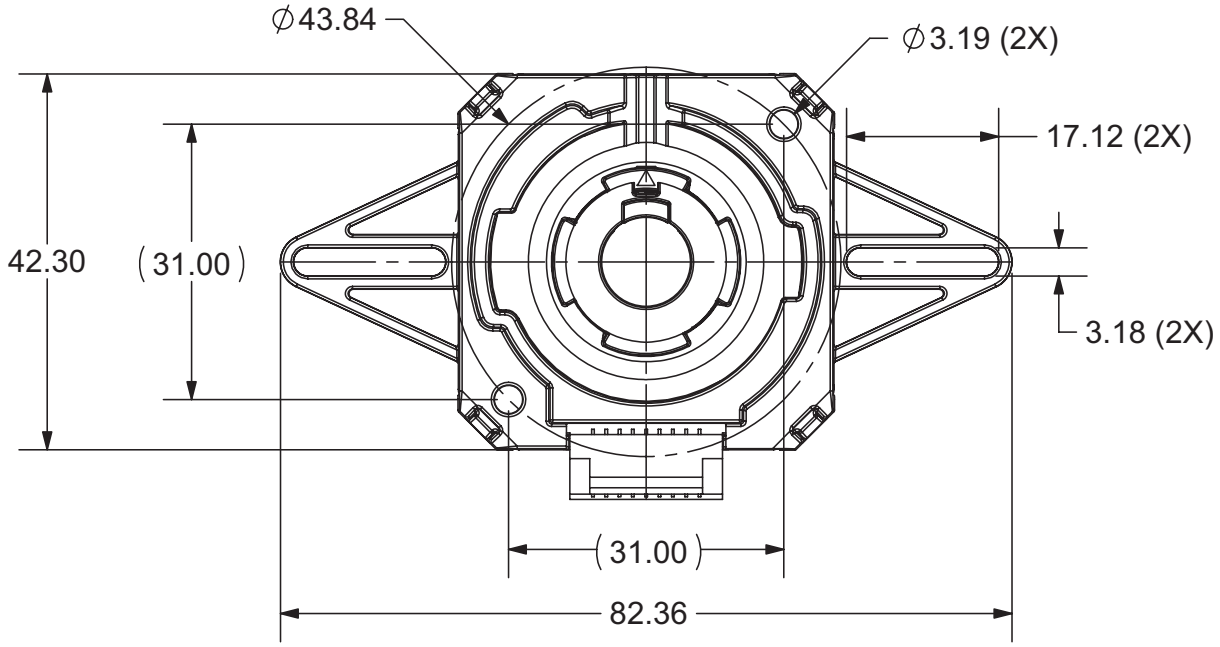

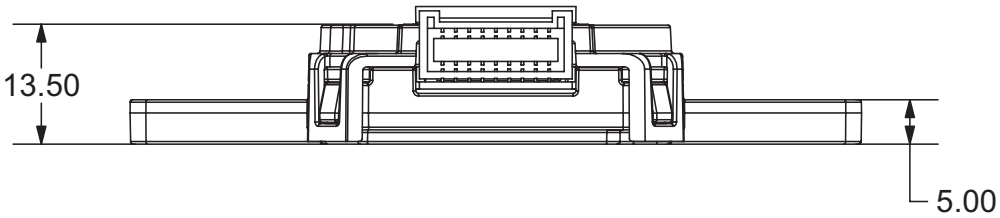

ASSEMBLY PROCEDURE

STEP 1

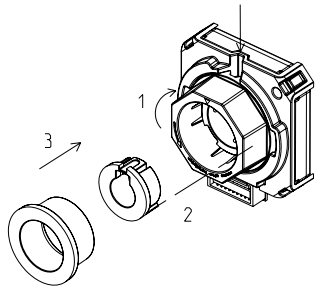

1. Begin by rotating the pre-installed alignment tool clockwise and completely to the right so that the pre-installed shaft set screw is visible.
2. Select the appropriately sized shaft adapter and insert it into the encoder making sure the adapter is properly aligned with the keyway in the metal hub. No adapter is needed for a 5/8" motor shaft.
3. Select the placement tool and insert it into the encoder. This placement tool holds the encoder's hub and shaft adapter in the proper position for installation onto the motor shaft.

STEP 2

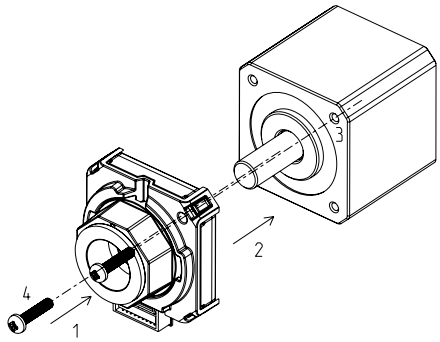

1. Slide the encoder onto the motor shaft applying force only to the placement tool to maintain proper alignment of the encoder's hub and shaft adapter.
2. Press until the encoder sits flush with the motor body.
3. Once in contact with the motor body, rotate the encoder until the mounting holes are aligned with the proper bolt circle.
4. Insert screws and fasten the encoder to the motor.

STEP 3

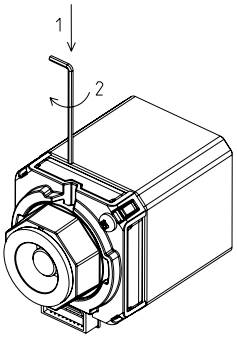

1. Insert the Allen Wrench into the notch on the top.
2. Tighten the shaft set screw to the recommended torque settings per the spec.

STEP 4

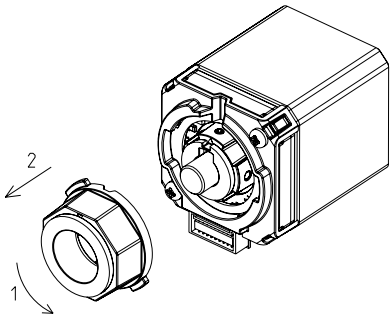

1. Rotate the placement tool and alignment tool counterclockwise until the tabs align with the openings.
2. Remove both tools from the encoder.
3. When installation is finished, the motor shaft should be rotating freely.

REVISION HISTORY

rev.	description	date
1.0	initial release	07/19/2022
1.01	logo, datasheet style update	08/05/2022
1.02	added wide base drawing	01/12/2023
1.03	CUI Devices rebranded to Same Sky	09/12/2024
1.04	added connector pin numbers	06/24/2025

The revision history provided is for informational purposes only and is believed to be accurate.

Same Sky offers a one (1) year limited warranty. Complete warranty information is listed on our website.

Same Sky reserves the right to make changes to the product at any time without notice. Information provided by Same Sky is believed to be accurate and reliable. However, no responsibility is assumed by Same Sky for its use, nor for any infringements of patents or other rights of third parties which may result from its use.

Same Sky products are not authorized or warranted for use as critical components in equipment that requires an extremely high level of reliability. A critical component is any component of a life support device or system whose failure to perform can be reasonably expected to cause the failure of the life support device or system, or to affect its safety or effectiveness.