REVISIONS					
REV	ECO	DESCRIPTION	DATE	BY	APPR
A1	--	RELEASE NEW DRAWING	18/OCT/18	BROOK	TOMMY
A2	--	ADD MORE MATERIAL NOTES	25/OCT/18	BROOK	TOMMY

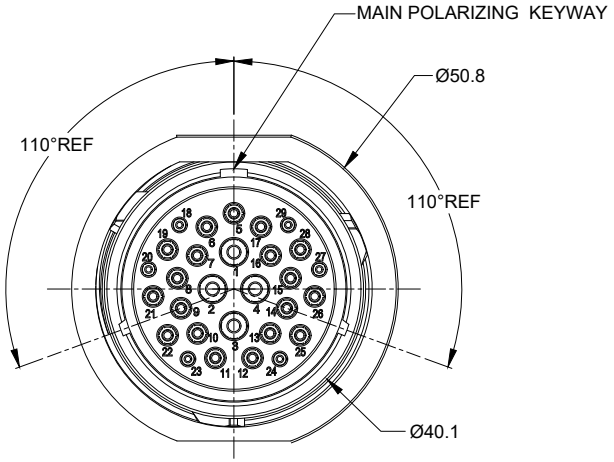

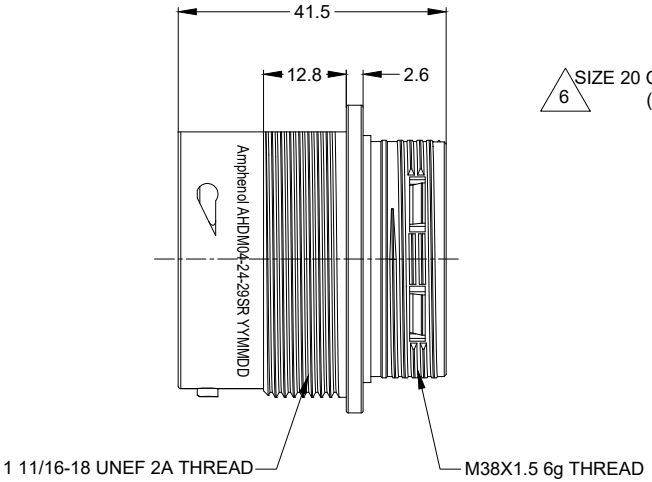

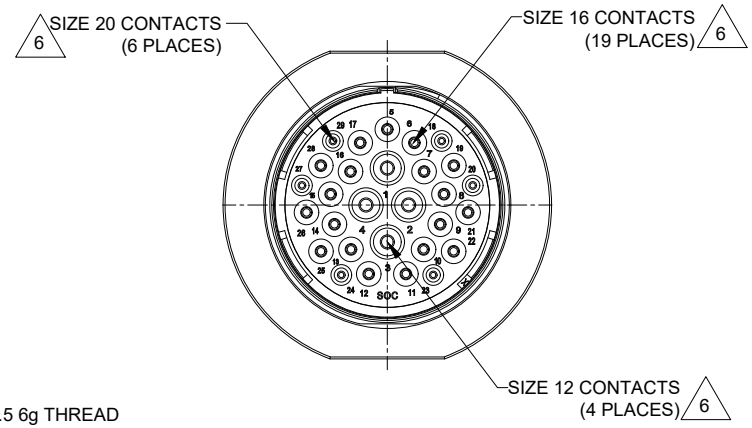

NOTES: UNLESS OTHERWISE SPECIFIED

1. MATERIAL:
   SHELL: ZINC ALLOY, NICKEL PLATED
   INSERT AND RETAINING RING: THERMOPLASTIC
   SEAL: SILICONE RUBBER

2. MODIFICATIONS: THREADED HOUSING; REDUCED DIA. WIRE SEAL

3. SPECIFICATIONS:
   3.1 OPERATING TEMPERATURE: -55℃ TO +125℃.
   3.2 DIELECTRIC WITHSTANDING VOLTAGE: LESS THAN 2 MILLIAMPS CURRENT LEAKAGE @ 1500 VOLTS AC.
   3.3 INSULATION RESISTANCE: 1000 MEGOHM MIN @ 25℃.
   3.4 MOISTURE RESISTANCE: IP67&IP69K (MATED CONDITION).
   3.5 MATING CYCLE DURABILITY: 100 CYCLES
   3.6 RoHS COMPLIANT

4. MATING PART: AHDM06-24-29P* (* = SEAL TYPE)

5. ALL DIMENSIONS ARE FOR REFERENCE USE ONLY.

△6 CONTACT SIZE AND WIRE RANGE:

CONTACT SIZE	MIN. INSUL O.D.	MAX. INSUL O.D.	TYPICAL WIRE RANGE	CURRENT RATING
12	2.46 mm (.097 in)	4.01 mm (.158 in)	10-14 AWG	25 AMPS
16	1.35 mm (.053 in)	2.62 mm (.103 in)	14-20 AWG	13 AMPS
20	1.02 mm (.040 in)	2.10 mm (.083 in)	16-22 AWG	7.5 AMPS

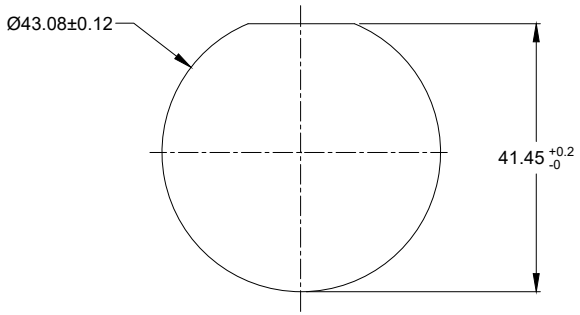

RECOMMENDED PANEL MOUNTING HOLE

RECOMMENDED PANEL THICKNESS:1.6 TO 4.7MM

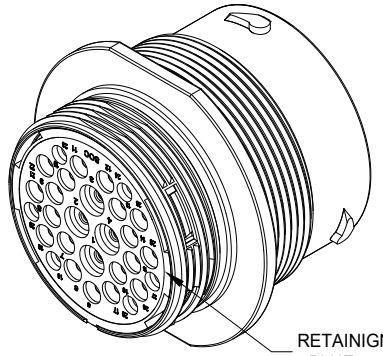

	AHDM04-24-29SR		
	PART NUMBER	DESCRIPTION	ITEM
QUANTITY	MATERIALS LIST		

UNLESS OTHERWISE SPECIFIED
1) All dimensions are in metric(mm).
2) Tolerances are as follows:
1 PL DEC ±0.30 | Fractions ±1/64
2 PL DEC ±0.15 | Angles ±1°
3 PL DEC ±0.08
3) Note reference = △X

MATERIAL SPECIFICATIONS:

PROCESS SPECIFICATIONS:

NEXT ASS'Y:

SIGNATURES		DATE
DRAWN:	BROOK	25/OCT/18
CHECKED:	ORION	25/OCT/18
ENGINEER:		
APPROVAL:	TOMMY	25/OCT/18
CUSTOMER:		

THIS DRAWING IS SUPPLIED FOR INFORMATION ONLY. DESIGN FEATURES, SPECIFICATIONS AND PERFORMANCE DATA SHOWN HEREON ARE THE PROPERTY OF THE AMPHENOL CORPORATION. NO RIGHTS OF REPRODUCTION ARE IMPLIED. ALL DIMENSIONS ARE SUBJECT TO NORMAL MANUFACTURING VARIATIONS.

Amphenol

Sine Systems - www.amphenol-sine.com
44724 Morley Drive
Clinton Township, MI 48036

RECPT, 24 SZ 29 SOC, RD, WIDE THD

SIZE	TYPE	DWG NO:	REVISION
B	C-	AHDM04-24-29SR	A2

SCALE NONE SHEET 1 OF 1

TITLE: RECPT, 24 SZ 29 SOC, RD, WIDE THD
DWG NO: AHDM04-24-29SR
REV: A2
SH: 1
OF: 1

AHD, ARB, ATP, ATHD, DuraMate™ and PanelMate™ Series

Size 12 Contact & Tooling Options

Contacts - Machined

Part Number	Type	Style	Contact Size	Amp	Wire Range (AWG)	Wire Range (mm^2)	Insulation OD (mm)	Plating	Reel Size	Packaging
AT60-204-12141-10	Pin	Machined	Size 12	25A	10-12AWG	-	-	Nickel-Plated	-	-
AT60-204-12141	Pin	Machined	Size 12	25A	12-14AWG	-	-	Nickel-Plated	-	-
AT60-220-1231	Pin	Machined	Size 12	25A	12-14AWG	-	-	Gold-Plated	-	-
AT60-204-12NKIT	Pin	Machined	Size 12	25A	12-14AWG	-	-	Nickel-Plated	-	-
AT60-220-1231-1618	Pin	Machined	Size 12	25A	16-18AWG	-	-	Gold-Plated	-	-
AT60-220-1231-1820	Pin	Machined	Size 12	25A	18-20AWG	-	-	Gold-Plated	-	-
AT62-203-12141-10	Socket	Machined	Size 12	25A	10-12AWG	-	-	Nickel-Plated	-	-
AT62-203-12141	Socket	Machined	Size 12	25A	12-14AWG	-	-	Nickel-Plated	-	-
AT62-203-12NKIT	Socket	Machined	Size 12	25A	12-14AWG	-	-	Nickel-Plated	-	-
AT62-210-1231	Socket	Machined	Size 12	25A	12-14AWG	-	-	Gold-Plated	-	-
AT62-210-1231-1618	Socket	Machined	Size 12	25A	16-18AWG	-	-	Gold-Plated	-	-
AT62-210-1231-1820	Socket	Machined	Size 12	25A	18-20AWG	-	-	Gold-Plated	-	-

Contacts - Stamped & Formed

AT60-12-0222	Pin	S&F	Size 12	25A	10-12AWG	6.0-4.0mm^2	3.56 - 5.18mm	Nickel-Plated	-	-
AT60-12-0222-LP	Pin	S&F	Size 12	25A	10-12AWG	6.0-4.0mm^2	3.56 - 5.18mm	Nickel-Plated	-	Loose Piece
AT60-12-0244	Pin	S&F	Size 12	25A	10-12AWG	6.0-4.0mm^2	3.56 - 5.18mm	Gold-Plated	-	-
AT60-12-0244-LP	Pin	S&F	Size 12	25A	10-12AWG	6.0-4.0mm^2	3.56 - 5.18mm	Gold-Plated	-	Loose Piece
AT60-12-0144	Pin	S&F	Size 12	25A	12-14AWG	4.0-2.0mm^2	2.87 - 4.47mm	Gold-Plated	-	-
AT60-12-0144-LP	Pin	S&F	Size 12	25A	12-14AWG	4.0-2.0mm^2	2.87 - 4.47mm	Gold-Plated	-	Loose Piece
AT60-12-0166	Pin	S&F	Size 12	25A	12-14AWG	4.0-2.0mm^2	2.87 - 4.47mm	Nickel-Plated	-	-
AT60-12-0166-LP	Pin	S&F	Size 12	25A	12-14AWG	4.0-2.0mm^2	2.87 - 4.47mm	Nickel-Plated	-	Loose Piece
AT62-12-0222	Socket	S&F	Size 12	25A	10-12AWG	6.0-4.0mm^2	3.56 - 5.18mm	Nickel-Plated	-	-
AT62-12-0222-LP	Socket	S&F	Size 12	25A	10-12AWG	6.0-4.0mm^2	3.56 - 5.18mm	Nickel-Plated	-	Loose Piece
AT62-12-0244	Socket	S&F	Size 12	25A	10-12AWG	6.0-4.0mm^2	3.56 - 5.18mm	Gold-Plated	-	-
AT62-12-0244-LP	Socket	S&F	Size 12	25A	10-12AWG	6.0-4.0mm^2	3.56 - 5.18mm	Gold-Plated	-	Loose Piece
AT62-12-0144	Socket	S&F	Size 12	25A	12-14AWG	4.0-2.0mm^2	2.87 - 4.47mm	Gold-Plated	-	-
AT62-12-0144-LP	Socket	S&F	Size 12	25A	12-14AWG	4.0-2.0mm^2	2.87 - 4.47mm	Gold-Plated	-	Loose Piece
AT62-12-0166	Socket	S&F	Size 12	25A	12-14AWG	4.0-2.0mm^2	2.87 - 4.47mm	Nickel-Plated	-	-
AT62-12-0166-LP	Socket	S&F	Size 12	25A	12-14AWG	4.0-2.0mm^2	2.87 - 4.47mm	Nickel-Plated	-	Loose Piece

Tooling

Part Number	Tool Name	Style	Contact Size	Wire Range (AWG)	Material	Color
MFX-3966	Contact Locator for Hand Crimp Tool M300-25A	Machined	Size 12	10AWG	-	-
AUTK-12	Hand Crimp Tool	Machined	Size 12	10-18AWG	-	-
M300-25A	Hand Crimp Tool w MFX-3966 Locator	Machined	Size 12	10-18AWG	-	-
CA-5E12	Pneumatic Crimp Tool	Machined	Size 12/16/20	12-26AWG	-	-
CA-5D12	Universal Hand Crimp Tool	Machined	Size 12/16/20	12-26AWG	-	-
AUTK-100	Universal Heavy Duty Contact Crimping Tool Kit	Machined	Size 12/16/20	12-26AWG	-	-

AHD, ARB, ATP, ATHD, DuraMate™ and PanelMate™ Series

Size 12 Contact & Tooling Options, cont.

Tooling, cont.

Part Number	Tool Name	Style	Contact Size	Wire Range (AWG)	Material	Color
MFX-3973-G or K	Crimp Die Press Applicator	S&F	Size 12	12AWG	-	-
MFX-3985-G or K	Crimp Die Press Applicator	S&F	Size 12	10-12AWG	-	-
ATT-12-00	Hand Crimp Tool	S&F	Size 12	12-14AWG	-	-
ATT-12-01	Hand Crimp Tool	S&F	Size 12	10AWG	-	-
ATRT-100	Contact and Wedgelock Extraction Tool	Universal	Universal	-	Steel	Silver
AT11-337-1205	Contact Extraction Tool	Universal	Size 12	-	Plastic	Orange
A114017	Seal Plug	Universal	Size 12/16	-	Thermoplastic	White

AT, ATV, AHD, ARB, ARC, DuraMate™ and PanelMate™ Series

Size 16 Contact & Tooling Options

Contacts - Machined

Part Number	Type	Style	Contact Size	Amp	Wire Range (AWG)	Wire Range (mm^2)	Insulation OD (mm)	Plating	Reel Size	Packaging
AT60-215-16141	Pin	Machined	Size 16	13A	14AWG	-	-	Nickel-Plated	-	-
AT60-215-1631	Pin	Machined	Size 16	13A	14AWG	-	-	Gold-Plated	-	-
AT60-202-16NKIT	Pin	Machined	Size 16	13A	16-20AWG	-	-	Nickel-Plated	-	-
AT60-202-16141	Pin	Machined	Size 16	13A	16-20AWG	-	-	Nickel-Plated	-	-
AT60-202-1631	Pin	Machined	Size 16	13A	16-20AWG	-	-	Gold-Plated	-	-
AT60-202-16141-22	Pin	Machined	Size 16	13A	22-24AWG	-	-	Nickel-Plated	-	-
AT60-202-1631-22	Pin	Machined	Size 16	13A	22-24AWG	-	-	Gold-Plated	-	-
AT62-209-16141	Socket	Machined	Size 16	13A	14AWG	-	-	Nickel-Plated	-	-
AT62-209-1631	Socket	Machined	Size 16	13A	14AWG	-	-	Gold-Plated	-	-
AT62-201-16NKIT	Socket	Machined	Size 16	13A	16-20AWG	-	-	Nickel-Plated	-	-
AT62-201-16141	Socket	Machined	Size 16	13A	16-20AWG	-	-	Nickel-Plated	-	-
AT62-201-1631	Socket	Machined	Size 16	13A	16-20AWG	-	-	Gold-Plated	-	-
AT62-201-16141-22	Socket	Machined	Size 16	13A	22-24AWG	-	-	Nickel-Plated	-	-
AT62-201-1631-22	Socket	Machined	Size 16	13A	22-24AWG	-	-	Gold-Plated	-	-
Contacts - Stamped & Formed										
AT60-14-0122	Pin	S&F	Size 16	13A	14-18AWG	2.0-0.75mm^2	2.40 - 3.81mm	Nickel-Plated	-	-
AT60-14-0122-LP	Pin	S&F	Size 16	13A	14-18AWG	2.0-0.75mm^2	2.40 - 3.81mm	Nickel-Plated	-	Loose Piece
AT60-14-0144	Pin	S&F	Size 16	13A	14-18AWG	2.0-0.75mm^2	2.40 - 3.81mm	Gold-Plated	-	-
AT60-14-0144-LP	Pin	S&F	Size 16	13A	14-18AWG	2.0-0.75mm^2	2.40 - 3.81mm	Gold-Plated	-	Loose Piece
AT60-16-0122	Pin	S&F	Size 16	13A	16-18AWG	1.5-0.75mm^2	1.91 - 3.55mm	Nickel-Plated	-	-
AT60-16-0122-LP	Pin	S&F	Size 16	13A	16-18AWG	1.5-0.75mm^2	1.91 - 3.55mm	Nickel-Plated	-	Loose Piece
AT60-16-0144	Pin	S&F	Size 16	13A	16-18AWG	1.5-0.75mm^2	1.91 - 3.55mm	Gold-Plated	-	-
AT60-16-0144-LP	Pin	S&F	Size 16	13A	16-18AWG	1.5-0.75mm^2	1.91 - 3.55mm	Gold-Plated	-	Loose Piece
AT60-16-0622	Pin	S&F	Size 16	13A	16-20AWG	1.0-0.5mm^2	1.40 - 2.54mm	Nickel-Plated	-	-
AT60-16-0622-LP	Pin	S&F	Size 16	13A	16-20AWG	1.0-0.5mm^2	1.40 - 2.54mm	Nickel-Plated	-	Loose Piece
AT60-16-0644	Pin	S&F	Size 16	13A	16-20AWG	1.0-0.5mm^2	1.40 - 2.54mm	Gold-Plated	-	-
AT60-16-0644-LP	Pin	S&F	Size 16	13A	16-20AWG	1.0-0.5mm^2	1.40 - 2.54mm	Gold-Plated	-	Loose Piece
AT60-16-0322	Pin	S&F	Size 16	13A	20-22AWG	0.5-0.35mm^2	1.31 - 1.50mm	Nickel-Plated	-	-
AT60-16-0344	Pin	S&F	Size 16	13A	20-22AWG	0.5-0.35mm^2	1.31 - 1.50mm	Gold-Plated	-	-
AT60-16-0377	Pin	S&F	Size 16	13A	20-22AWG	0.5-0.35mm^2	1.31 - 1.50mm	Tin-Plated	-	-
AT60-16-0822	Pin	S&F	Size 16	13A	20-22AWG	0.5-0.35mm^2	1.31 - 1.50mm	Nickel-Plated	4,000	-
AT60-16-0844	Pin	S&F	Size 16	13A	20-22AWG	0.5-0.35mm^2	1.31 - 1.50mm	Gold-Plated	4,000	-
AT62-14-0122	Socket	S&F	Size 16	13A	14-18AWG	2.0-0.75mm^2	2.40 - 3.81mm	Nickel-Plated	-	-
AT62-14-0122-LP	Socket	S&F	Size 16	13A	14-18AWG	2.0-0.75mm^2	2.40 - 3.81mm	Nickel-Plated	-	Loose Piece
AT62-14-0144	Socket	S&F	Size 16	13A	14-18AWG	2.0-0.75mm^2	2.40 - 3.81mm	Gold-Plated	-	-
AT62-14-0144-LP	Socket	S&F	Size 16	13A	14-18AWG	2.0-0.75mm^2	2.40 - 3.81mm	Gold-Plated	-	Loose Piece
AT62-16-0122	Socket	S&F	Size 16	13A	16-18AWG	1.5-0.75mm^2	1.91 - 3.55mm	Nickel-Plated	-	-
AT62-16-0122-LP	Socket	S&F	Size 16	13A	16-18AWG	1.5-0.75mm^2	1.91 - 3.55mm	Nickel-Plated	-	Loose Piece
AT62-16-0144	Socket	S&F	Size 16	13A	16-18AWG	1.5-0.75mm^2	1.91 - 3.55mm	Gold-Plated	-	-

AT, ATV, AHD, ARB, ARC, DuraMate™ and PanelMate™ Series

Size 16 Contact & Tooling Options, cont.

Contacts - Stamped & Formed, cont.

Part Number	Type	Style	Contact Size	Amp	Wire Range (AWG)	Wire Range (mm^2)	Insulation OD (mm)	Plating	Reel Size	Packaging
AT62-16-0144-LP	Socket	S&F	Size 16	13A	16-18AWG	1.5-0.75mm^2	1.91 - 3.55mm	Gold-Plated	-	Loose Piece
AT62-16-0622	Socket	S&F	Size 16	13A	16-20AWG	1.0-0.5mm^2	1.40 - 2.54mm	Nickel-Plated	-	-
AT62-16-0622-LP	Socket	S&F	Size 16	13A	16-20AWG	1.0-0.5mm^2	1.40 - 2.54mm	Nickel-Plated	-	Loose Piece
AT62-16-0644	Socket	S&F	Size 16	13A	18-20AWG	1.0-0.5mm^2	1.40 - 2.54mm	Gold-Plated	-	-
AT62-16-0644-LP	Socket	S&F	Size 16	13A	18-20AWG	1.0-0.5mm^2	1.40 - 2.54mm	Gold-Plated	-	Loose Piece
AT62-16-0822	Socket	S&F	Size 16	13A	20-22AWG	0.5-0.35mm^2	1.31 - 1.50mm	Nickel-Plated	4,000	-
AT62-16-0844	Socket	S&F	Size 16	13A	20-22AWG	0.5-0.35mm^2	1.31 - 1.50mm	Gold-Plated	4,000	-

Tooling

Part Number	Tool Name	Style	Contact Size	Wire Range (AWG)	Material	Color
AUTK-16	Hand Crimp Tool	Machined	Size 16	-	-	-
AUTK-100	Universal Heavy Duty Contact Crimping Tool Kit	Machined	Size 12/16/20	12-26AWG	-	-
CA-5D12	Universal Hand Crimp Tool	Machined	Size 12/16/20	12-26AWG	-	-
CA-5E12	Pneumatic Crimp Tool	Machined	Size 12/16/20	12-26AWG	-	-
MFX-3950-G or K	Crimp Die Press Applicator	S&F	Size 16	18-20AWG	-	-
MFX-3953-G or K	Crimp Die Press Applicator	S&F	Size 16	16-18AWG	-	-
MFX-3975-G or K	Crimp Die Press Applicator	S&F	Size 16	14-16AWG	-	-
MFX-3990	Crimp Die	S&F	Size 16	20-22AWG	-	-
ATT-16-00	Hand Crimp Tool	S&F	Size 16	14-16AWG	-	-
ATT-16-01	Hand Crimp Tool	S&F	Size 16	18-20AWG	-	-
ATT-1612-03	Hand Crimp Tool	S&F	Size 12/16	20-22AWG	-	-
ATRT-100	Contact and Wedgelock Extraction Tool	Universal	Universal	-	Steel	Silver
AT11-310-1605	Contact Extraction Tool	Universal	Size 16	-	Plastic	Lt Blue
A114017	Seal Plug	Universal	Size 12/16	-	Thermoplastic	White
A114017-SR	Seal Plug	Universal	Size 16	-	Thermoplastic	Black
AT13-217-1605	Locking Seal Plug	Universal	Size 16	-	Thermoplastic	Grey
AT13-217-1605-SR	Locking Seal Plug	Universal	Size 16	-	Thermoplastic	Red

ATM, DuraMate™ and PanelMate™ Series

Size 20 Contact & Tooling Options

Contacts - Machined

Part Number	Type	Style	Contact Size	Amp	Wire Range (AWG)	Wire Range (mm^2)	Insulation OD (mm)	Plating	Reel Size	Packaging
AT60-010-20141	Pin	Machined	Size 20	7.5A	16-18AWG	-	-	Nickel-Plated	-	-
AT60-010-2031	Pin	Machined	Size 20	7.5A	16-18AWG	-	-	Gold-Plated	-	-
AT60-202-20NKIT	Pin	Machined	Size 20	7.5A	18-22AWG	-	-	Nickel-Plated	-	-
AT60-202-20141	Pin	Machined	Size 20	7.5A	20-22AWG	-	-	Nickel-Plated	-	-
AT60-202-2031	Pin	Machined	Size 20	7.5A	20-22AWG	-	-	Gold-Plated	-	-
AT60-202-2031-22	Pin	Machined	Size 20	5A	22-26AWG	-	-	Gold-Plated	-	-
AT60-202-20141-22	Pin	Machined	Size 20	5A	22-26AWG	-	-	Nickel-Plated	-	-
AT62-005-20141	Socket	Machined	Size 20	7.5A	16-18AWG	-	-	Nickel-Plated	-	-
AT62-005-2031	Socket	Machined	Size 20	7.5A	16-18AWG	-	-	Gold-Plated	-	-
AT62-201-20NKIT	Socket	Machined	Size 20	7.5A	20-22AWG	-	-	Nickel-Plated	-	-
AT62-201-20141	Socket	Machined	Size 20	7.5A	20-22AWG	-	-	Nickel-Plated	-	-
AT62-201-2031	Socket	Machined	Size 20	7.5A	20-22AWG	-	-	Gold-Plated	-	-
AT62-20-0422	Socket	Machined	Size 20	7.5A	20-22AWG	-	-	Nickel-Plated	-	-
AT62-20-0444	Socket	Machined	Size 20	7.5A	20-22AWG	-	-	Gold-Plated	-	-
AT62-201-2031-22	Socket	Machined	Size 20	5A	22-26AWG	-	-	Gold-Plated	-	-
AT62-201-20141-22	Socket	Machined	Size 20	5A	22-26AWG	-	-	Nickel-Plated	-	-

Contacts - Stamped & Formed

AT60-20-0122	Pin	S&F	Size 20	7.5A	16-22AWG	1.5-0.35mm^2	1.91 - 3.15mm	Nickel-Plated	-	-
AT60-20-0122-LP	Pin	S&F	Size 20	7.5A	16-22AWG	1.5-0.35mm^2	1.91 - 3.15mm	Nickel-Plated	-	Loose Piece
AT60-20-0144	Pin	S&F	Size 20	7.5A	16-22AWG	1.5-0.35mm^2	1.91 - 3.15mm	Gold-Plated	-	-
AT60-20-0144-LP	Pin	S&F	Size 20	7.5A	16-22AWG	1.5-0.35mm^2	1.91 - 3.15mm	Gold-Plated	-	Loose Piece
AT60-20-0222	Pin	S&F	Size 20	7.5A	16-22AWG	1.5-0.35mm^2	1.30 - 2.16mm	Nickel-Plated	-	-
AT60-20-0244	Pin	S&F	Size 20	7.5A	16-22AWG	1.5-0.35mm^2	1.30 - 2.16mm	Gold-Plated	-	-
AT60-20-0277	Pin	S&F	Size 20	7.5A	16-22AWG	1.5-0.35mm^2	1.30 - 2.16mm	Tin-Plated	-	-
AT60-20-0422	Pin	S&F	Size 20	7.5A	20-22AWG	0.5-0.35mm^2	1.25 - 1.8mm	Nickel-Plated	-	-
AT60-20-0444	Pin	S&F	Size 20	7.5A	20-22AWG	0.5-0.35mm^2	1.25 - 1.8mm	Gold-Plated	-	-
AT62-20-0122	Socket	S&F	Size 20	7.5A	16-22AWG	1.5-0.35mm^2	1.91 - 3.15mm	Nickel-Plated	-	-
AT62-20-0122-LP	Socket	S&F	Size 20	7.5A	16-22AWG	1.5-0.35mm^2	1.91 - 3.15mm	Nickel-Plated	-	Loose Piece
AT62-20-0144	Socket	S&F	Size 20	7.5A	16-22AWG	1.5-0.35mm^2	1.91 - 3.15mm	Gold-Plated	-	-
AT62-20-0144-LP	Socket	S&F	Size 20	7.5A	16-22AWG	1.5-0.35mm^2	1.91 - 3.15mm	Gold-Plated	-	Loose Piece
AT62-20-0222	Socket	S&F	Size 20	7.5A	16-22AWG	1.5-0.35mm^2	1.30 - 2.16mm	Nickel-Plated	-	-
AT62-20-0244	Socket	S&F	Size 20	7.5A	16-22AWG	1.5-0.35mm^2	1.30 - 2.16mm	Gold-Plated	-	-
AT62-20-0277	Socket	S&F	Size 20	7.5A	16-22AWG	1.5-0.35mm^2	1.30 - 2.16mm	Tin-Plated	-	-
AT62-20-0422	Socket	S&F	Size 20	7.5A	20-22AWG	0.5-0.35mm^2	1.25 - 1.8mm	Nickel-Plated	-	-
AT62-20-0444	Socket	S&F	Size 20	7.5A	20-22AWG	0.5-0.35mm^2	1.25 - 1.8mm	Gold-Plated	-	-

ATM, DuraMate™ and PanelMate™ Series

Size 20 Contact & Tooling Options, cont.

Tooling

Part Number	Tool Name	Style	Contact Size	Wire Range (AWG)	Material	Color
AUTK-20	Hand Crimp Tool	Machined	Size 20	12-26AWG	-	-
AUTK-100	Universal Heavy Duty Contact Crimping Tool Kit	Machined	Size 12/16/20	12-26AWG	-	-
CA-5D12	Universal Hand Crimp Tool	Machined	Size 12/16/20	12-26AWG	-	-
CA-5E12	Pneumatic Crimp Tool	Machined	Size 12/16/20	12-26AWG	-	-
MFX-3974-G or K	Crimp Die Press Applicator	S&F	Size 20	20AWG	-	-
MFX-3976-G or K	Crimp Die Press Applicator	S&F	Size 20	20-22AWG	-	-
MFX-3978-G or K	Crimp Die Press Applicator	S&F	Size 20	20-22AWG	-	-
ATT-20-00	Hand Crimp Tool	S&F	Size 20	16-20AWG	-	-
ATRT-100	Contact and Wedgelock Extraction Tool	Universal	Universal	-	Steel	Silver
AT11-240-2005	Contact Extraction Tool	Universal	Size 20	-	Plastic	Red
AT13-204-2005	Seal Plug	Universal	Size 20	-	Thermoplastic	White
AT13-204-2005-SR	Seal Plug	Universal	Size 20	n/a	Thermoplastic	Black
ATM13-217-2005	Locking Seal Plug	Universal	Size 20	-	Thermoplastic	Grey
ATM13-217-2005-SR	Locking Seal Plug	Universal	Size 20	-	Thermoplastic	Blue