Automotive Power Common Mode Chokes

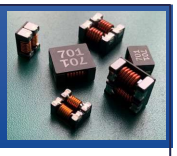

ACMP-Q9050

Request Samples Check Inventory

9.0 x 7.0 x 4.5 mm
RoHS/RoHS II Compliant
MSL Level = 1

Features

- AEC-Q200 compliant, Grade 1
- PPAP ready and supported
- Manufactured in TS/IATF 16949 production lines
- Excellent impedance characteristics
- Rated current up to 6A
- Extremely low DCR

Applications

- DC power line common mode noise suppression.
- Multimedia devices
- Automotive power train
- Automotive infotainment

Electrical Specifications

Part Number	Impedance (Ω) @100MHz		DCR (mΩ)	Rated Current (A)	Rated Voltage (Vdc)	Insulation Resistance (MΩ)
	Min	Typ.	Max	Max	Max	Min
ACMP-Q9050-701	500	700	9	6.0	80	10
ACMP-Q9050-102	750	1000	10	5.0	80	10
ACMP-Q9050-152	1000	1500	15	4.5	80	10
ACMP-Q9050-222	1700	2200	25	4.0	80	10
ACMP-Q9050-272	2000	2700	32	3.5	80	10

Rated Current is based on an Irms temperature rise of 40°C.
ACMP-Q9050 is AEC-Q200 Automotive certified.
ACMP-Q9050 Series is RoHS Compliant and Pb free.
Operating Temperature: -40°C to +125°C (Including self-heating)
Storage Temperature (on PCB): -40°C to +125°C.
Storage (in original packaging): <40°C, <60% RH.

Automotive Power Common Mode Chokes

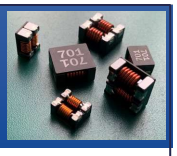

ACMP-Q9050

Request Samples Check Inventory

9.0 x 7.0 x 4.5 mm
RoHS/RoHS II Compliant
MSL Level = 1

Electrical Specifications

ACMP-Q9050-701

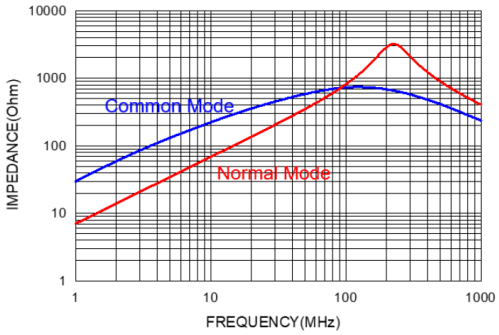

ACMP-Q9050-102

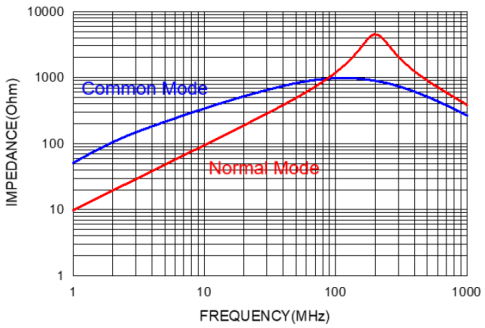

ACMP-Q9050-152

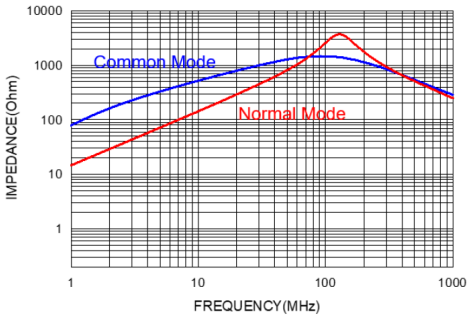

ACMP-Q9050-222

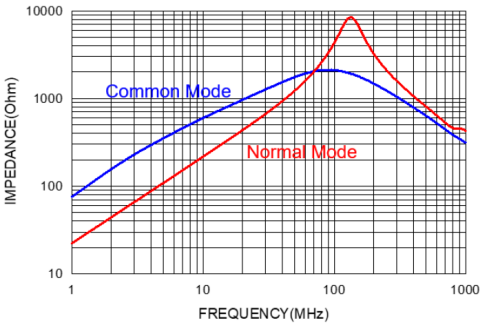

ACMP-Q9050-272

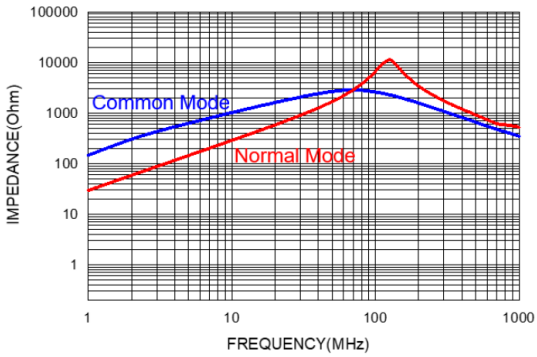

ABRACON

5101 Hidden Creek Ln, Spicewood TX 78669
Phone: 512-371-6159 Fax: 512-351-8858
For terms and conditions of sales, please visit:
www.abracon.com

REVISION A 8/24/2023

ABRACON IS
ISO9001-2015
CERTIFIED

Automotive Power Common Mode Chokes

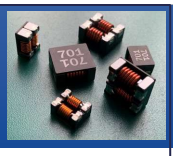

ACMP-Q9050

Request Samples Check Inventory

9.0 x 7.0 x 4.5 mm
RoHS/RoHS II Compliant
MSL Level = 1

Mechanical Specifications

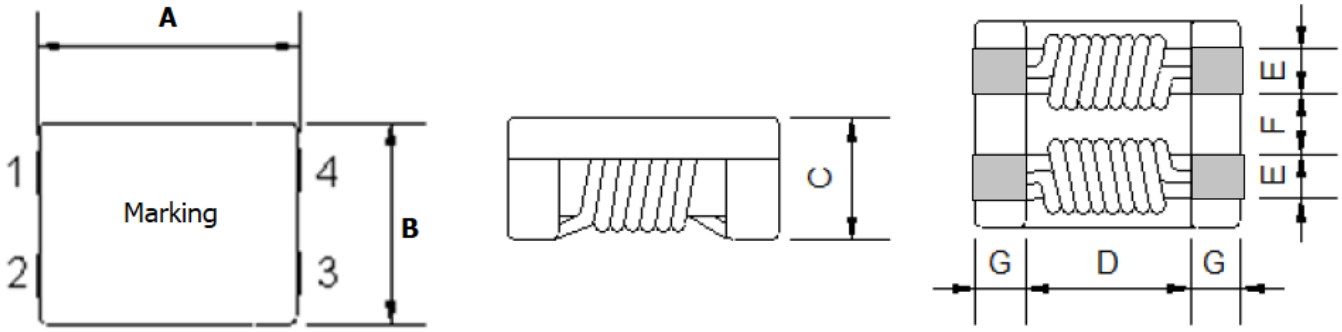

A	B	C	D	E	F	G
9.0 ±0.5	7.0 ±0.5	4.5 Max	5.3 Typ.	1.5 ±0.5	2.1 ±0.5	1.8 ±0.5

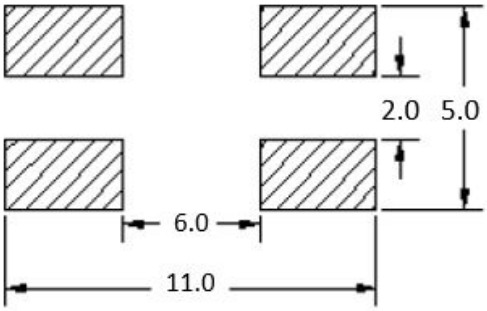

Recommended Layout

Dimensions: mm

Automotive Power Common Mode Chokes

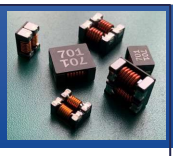

ACMP-Q9050

Request Samples Check Inventory

9.0 x 7.0 x 4.5 mm
RoHS/RoHS II Compliant
MSL Level = 1

Schematic

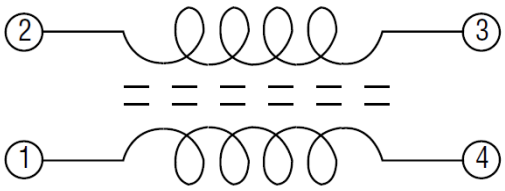

Materials

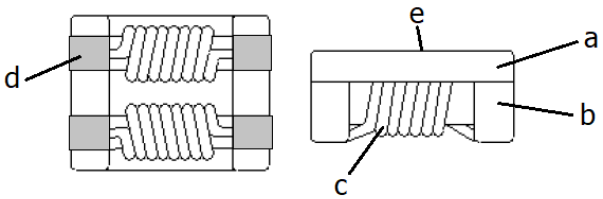

	Description	Specification
a	Upper Plate	Plastic
b	Core	Ferrite Core
c	Wire	Enameled Copper
d	Electrode	Ag/Ni/Sn + Sn Solder
e	Marking	Laser Marking

Part Identification

ACMP - ☐ ☐ - ☐ - ☐

AEC-Q200
Q: Automotive Grade

Package L x H (mm)
9050: 9.0mm x 4.5mm

Impedance (Ω)
i.e. 701: 700Ω Typical

Packaging
T: Tape & Reel 800 pcs

Automotive Power Common Mode Chokes

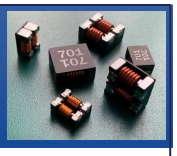

ACMP-Q9050

Request Samples Check Inventory

9.0 x 7.0 x 4.5 mm
RoHS/RoHS II Compliant
MSL Level = 1

Reflow Profile

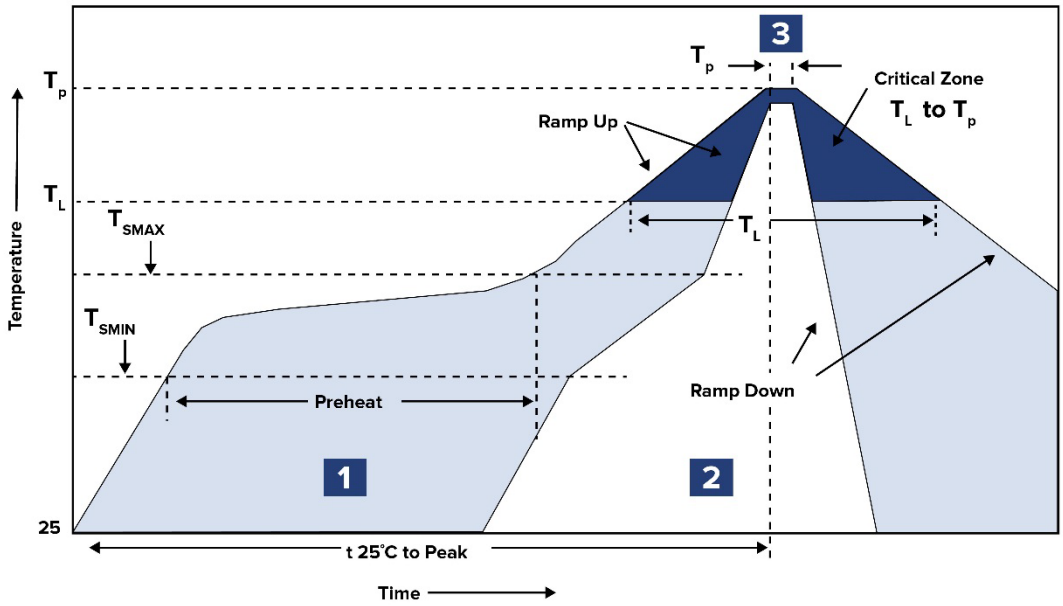

Zone	Description	Temperature	Times
1	Preheat	T_{SMIN} ~ T_{SMAX} 150°C ~ 200°C	60 ~ 120 sec.
2	Reflow	T_L 217°C	60 ~ 150 sec.
3	Peak heat	T_P 250°C±5°C	30 sec. MAX

ABRACON

5101 Hidden Creek Ln, Spicewood TX 78669
Phone: 512-371-6159 Fax: 512-351-8858
For terms and conditions of sales, please visit:
www.abracon.com

ABRACON IS ISO9001-2015 CERTIFIED

Automotive Power Common Mode Chokes

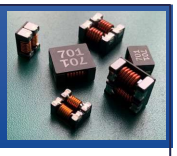

ACMP-Q9050

Request Samples Check Inventory

9.0 x 7.0 x 4.5 mm
RoHS/RoHS II Compliant
MSL Level = 1

Packaging

Tape & Reel: 800pcs/reel

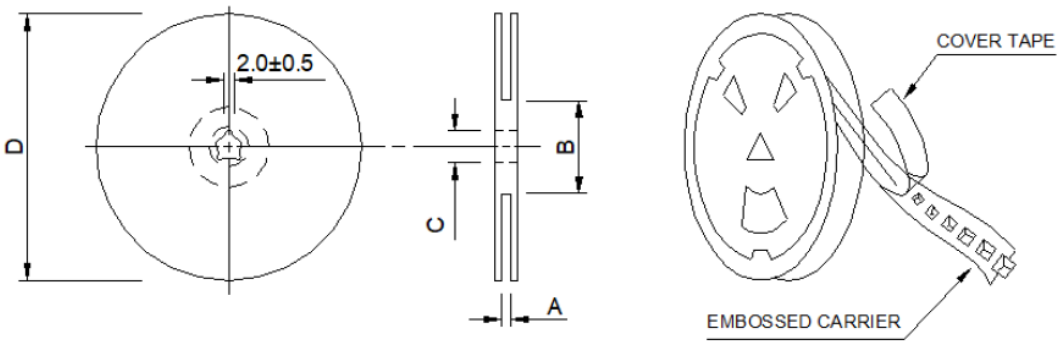

Series	A	B	C	D
ACMP-Q9050	16.0 ±0.5	100.0 ±2.0	13.5 ±0.5	330

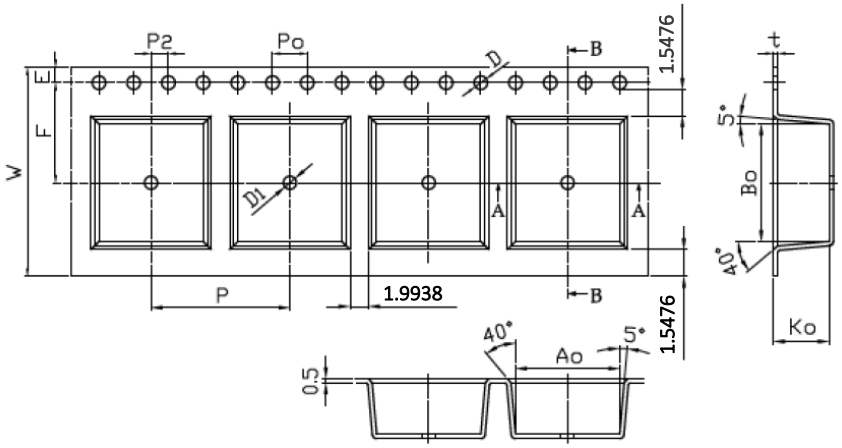

W	P	E	F	P0	P2	Bo	Ao	Ko	D	D1	t
16.0 ±0.30	12 ±0.10	1.75 ±0.10	7.5 ±0.10	4.0 ±0.10	2.0 ±0.10	9.6 ±0.10	8.6 ±0.10	4.6 ±0.10	1.5 +0.10/-0	1.5 ±0.10	0.4 ±0.05

Dimensions: mm

ATTENTION: Abracon LLC's products are COTS – Commercial-Off-The-Shelf products; suitable for Commercial, Industrial and, where designated, Automotive Applications. Abracon's products are not specifically designed for Military, Aviation, Aerospace, Life-dependent Medical applications or any application requiring high reliability where component failure could result in loss of life and/or property. For applications requiring high reliability and/or presenting an extreme operating environment, written consent and authorization from Abracon LLC is required. Please contact Abracon LLC for more information.

ABRACON

5101 Hidden Creek Ln, Spicewood TX 78669
Phone: 512-371-6159 Fax: 512-351-8858
For terms and conditions of sales, please visit:
www.abracon.com

ABRACON IS ISO9001-2015 CERTIFIED