Automotive Grade Ceramic SMD Ultra Miniature Crystal

ABM8AIG

RoHS / RoHS II Compliant

3.2 x 2.5 x 0.8mm

Moisture Sensitivity Level (MSL) – This product is Hermetically Sealed and not Moisture Sensitive - MSL = N/A: Not Applicable

FEATURES:

- PPAP ready and supported
- TS16949 certified production lines
- Miniature size and low profile package: 3.2 x 2.5 x 0.8mm
- AEC-Q200 qualified
- Hermetically sealed ceramic package assures high precision and reliability
- Extended operating temperature range: -40°C to +125°C
- RoHS compliant and Pb free

APPLICATIONS:

- Navigation
- Car entertainment system
- COTS Military
- Test equipment
- Industrial control
- Medical Electronics (non-life dependent)
- Comfort control
- Instrument panel
- Telematics
- Industrial automation

STANDARD SPECIFICATIONS:

Parameters	Minimum	Typical	Maximum	Units	Notes
Frequency Range	10.000		54.000	MHz	
Operation Mode	Fundamental, AT-cut				
Operating Temperature	-40		+125	ºC	See options
Storage Temperature	-40		+125	ºC	
Frequency Tolerance @+25°C	-50		+50	ppm	See options
Frequency Stability over the Operating Temperature (ref. to +25°C)	-100		+100	ppm	See options
Equivalent series resistance (R1)			100	Ω	10.000 – 15.999MHz
			70		16.000 – 19.999MHz
			50		20.000 – 29.999MHz
			40		30.000 – 39.999MHz
			35		40.000 –54.000MHz
Shunt capacitance (C0)			7	pF	
Load capacitance (CL)	18			pF	Standard (See options if other than STD)
Drive Level		10	100	µW	
Aging	-3		+3	ppm	@25°C±3°C First year
Insulation Resistance	500			MΩ	@ 100Vdc ± 15V

OPTIONS AND PART IDENTIFICATION:

ABM8AIG - [ ] MHz - [ ] - [ ] - [ ][ ][ ] - [ ]

Frequency in MHz
Please specify the frequency in MHz.
e.g. 14.31818MHz

Load Capacitance (pF)
Blank: 18pF
If not standard, please specify CL in pF or S for series

Custom ESR if other than standard
R□
□: Specify a value in Ω
(e.g.: R80)

Operating Temp.
Blank: -40°C ~ +125°C
D: -40°C ~ +85°C
J: -40°C ~ +105°C

Freq. Tolerance
Blank: ± 50 ppm
4: ± 30 ppm
2: ± 20 ppm

Freq. Stability
Blank: ± 100 ppm
Z: ± 50 ppm

Packaging
Blank: Bulk
T3: Tape & Reel

Automotive Grade Ceramic SMD Ultra Miniature Crystal

ABM8AIG

RoHS / RoHS II Compliant

3.2 x 2.5 x 0.8mm

OUTLINE DIMENSIONS:

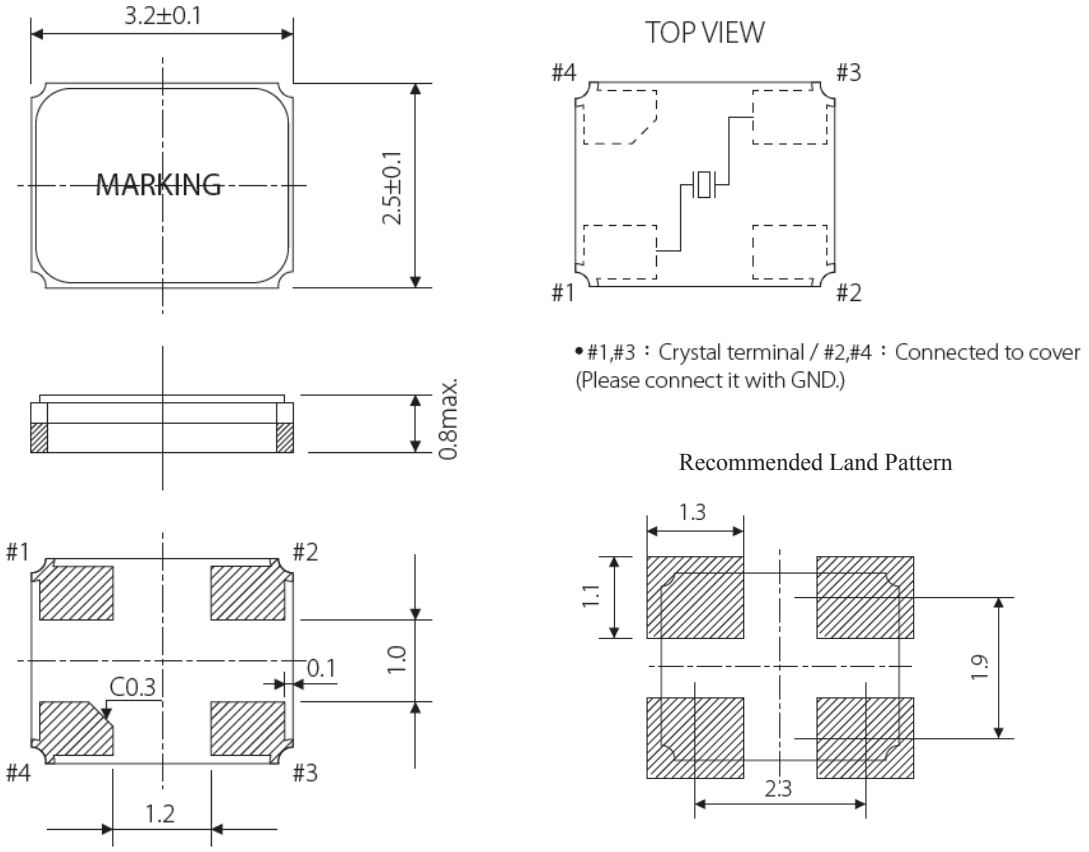

Dimensions: mm

REFLOW PROFILE:

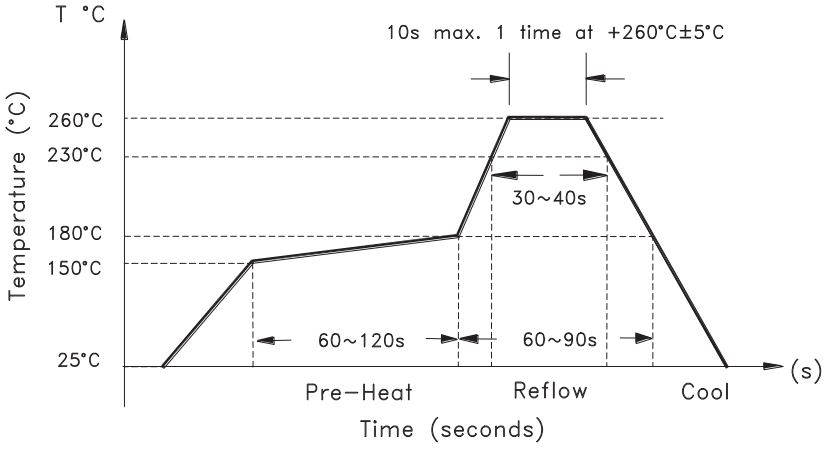

TAPE & REEL:

Packaging: T3: 3000pcs/reel

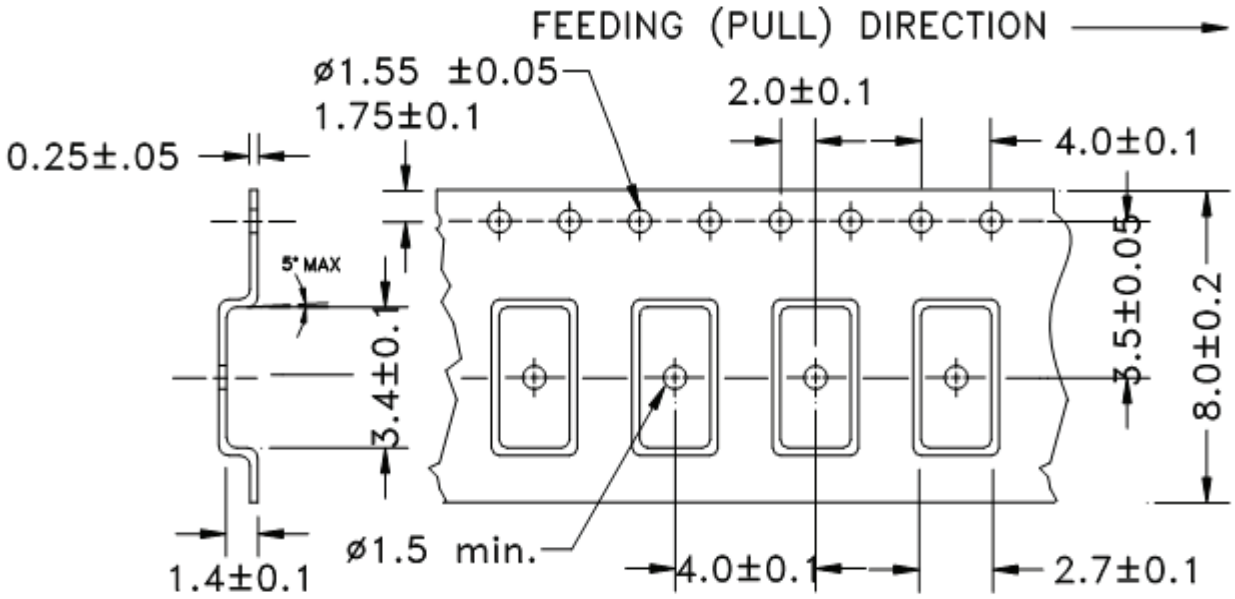

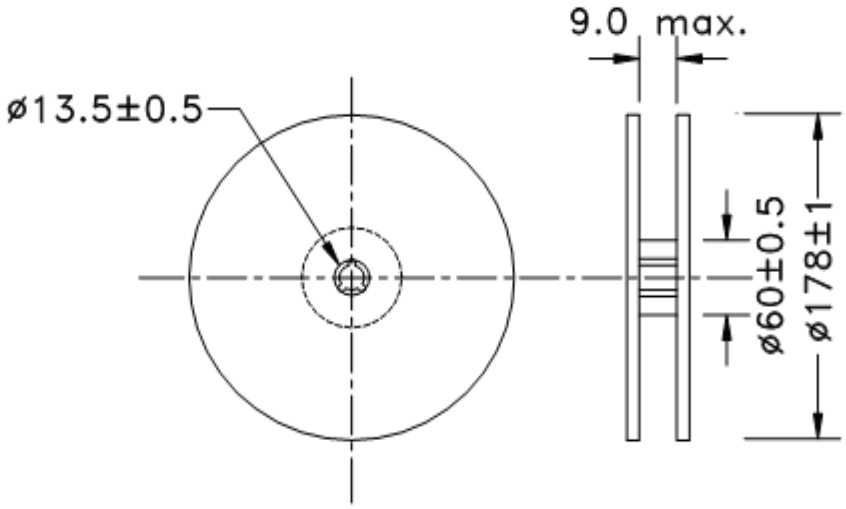

Dimensions: mm

ATTENTION: Abracon Corporation's products are COTS – Commercial-Off-The-Shelf products; suitable for Commercial, Industrial and, where designated, Automotive Applications. Abracon's products are not specifically designed for Military, Aviation, Aerospace, Life-dependant Medical applications or any application requiring high reliability where component failure could result in loss of life and/or property. For applications requiring high reliability and/or presenting an extreme operating environment, written consent and authorization from Abracon Corporation is required. Please contact Abracon Corporation for more information.

Pierce Analyzer System (PAS)
Advanced Board Characterization Service

Abracon PAS System enables us to offer Automotive, Medical, and Industrial application customers a comprehensive, automated assessment of the Pierce Oscillator loop, in concert with the customers selected Quartz Crystal. The PAS System Circuit Analysis report is ideally suited for PPAP documentation, design history reporting, and overall assurance of a reliable optimized circuit.

Features:

- Circuit characterization; providing best possible match between Quartz Crystal, oscillator loop and associated components
- Eliminates probability of oscillator start-up issues related to inadequate design or marginal component performance
- Eliminates production launch issues related to crystal oscillator based timing circuit
- Solves design margin uncertainty

Deliverables: A detail Report encompassing:

- ***Stand alone Quartz Crystal characteristics including:***
  - Motional parameters (Cm, Lm, ESR & C0)
  - Narrow Band Frequency Response Plot
  - Wide Band Frequency Response Plot
  - Admittance versus Susceptance plot
  - Frequency dependence versus load capacitance plot
- ***Oscillator loop characteristics including:***
  - Initial frequency accuracy and drive level as seen by the crystal with measured ESR
  - Worst case projected drive level with maximum specified ESR
  - Safety Factor of the oscillator loop under both typical and maximum ESR
  - Recommendation on proper component selection (C1, C2 & Rs when applicable) for best compromise with respect to Safety Factor and Frequency accuracy
  - Recommendation on the Abracon Crystal part # with proper plating load and other key attributes to enable the most robust design, specific to the µcontroller/processor implemented

Ordering information:

PAS-BC1WK	Analysis & Report with 1-week maximum lead-time
PAS-BC2WK	Analysis & Report with 2-week maximum lead-time
PAS-BC3WK	Analysis & Report with 3-week maximum lead-time

For detailed information, click here:

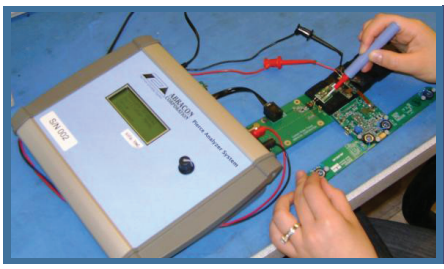

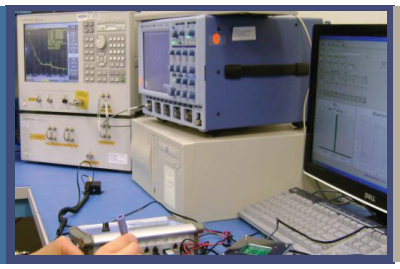
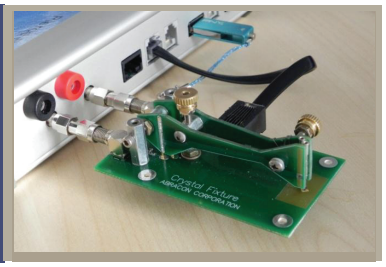

For additional information, please contact at: tech-support@abracon.com

2 Faraday, Suite# B | Irvine | CA 92618 **Revised: 12.09.15**
Ph. 949.546.8000 | Fax. 949.546.8001
Visit www.abracon.com for Terms and Conditions of Sale