A-400 Series, Rated up to 400 Amps, 28 Vdc

Product Facts

- **SPST NO, Double break**
- **Gasket sealed**
- **Auxiliary contacts available**
- **Meets many requirements of MIL-PRF-6106**

Performance Data

Electrical Characteristics

Contact Arrangement — SPST NO, Double Break

Rated Operating Voltage — 28 Vdc

Resistive Rating — 400 Amps

Inductive Rating — 100 Amps

Inrush Rating —
A-400B, A-400D, A400DB-1 — 1,200 Amps
A-400A, A-400AA, A-400L and A-400S — 1,500 Amps

Rupture Rating — 4,000 Amps

General Characteristics

Temperature Range — -55°C to +71°C

Operating Cycles (Life) at Rated Resistive Load, Min. — 50,000 cycles

Operating Cycles (Life) Mechanical, Min. — 100,000 cycles

Dielectric Strength —
All Circuits to Ground — 1,250 Vrms
Circuit to Circuit — 1,250 Vrms
Coil to Ground and Aux. Contacts — 1,000 Vrms

Altitude, Max. — 50,000 ft.

Weight — 1.26 to 1.48 lbs

Coil Characteristics

Duty Cycle — Intermittent with Suppression, or Continuous with Suppression

Operating Voltage, Nom. —
A-400A, A-400AA, A-400B, A-400D, A400DB-1, A-400DC, A-400G, A-400G-2, A-400L, A-400S — 28 Vdc

Operating Voltage, Max. —
A-400A, A-400AA, A-400B, A-400D, A400DB-1, A-400L, A-400S — 30 Vdc
A-400G, A-400G-2 — 31 Vdc
A-400DC — 32 Vdc

Pickup Voltage, Max. —
A-400A, A-400AA, A-400L — 14 Vdc
A-400B, A-400D, A400DB-1 — 18 Vdc
A-400DC — Normal — 14 Vdc
High Temp. — 18 Vdc
A-400G — Normal — 15 Vdc
High Temp. — 19 Vdc
A-400G-2 — Normal — 10 Vdc
High Temp. — 12.5 Vdc
A-400S — +X to -X2 — 18 Vdc
+Y1 to -Y2 — 13 Vdc

Dropout Voltage —
A-400L — 0.5 to 4 Vdc
A-400A, A-400AA, — 1 to 5 Vdc
A-400B, A-400D, A400DB-1 — 1 to 7 Vdc
A-400DC, A-400G, A-400G-2 — 1.0 Vdc Min.
A-400S — +X to -X2 — 1 to 7 Vdc
+Y1 to -Y2 — 0.5 to 5 Vdc

For factory-direct application assistance, phone 419-521-9500 or fax 419-526-2749.

Catalog 5-1773450-5
Revised 3-13

www.te.com

Dimensions are shown for reference purposes only. Specifications subject to change.

Dimensions are in millimeters unless otherwise specified.

USA: +1 800 522 6752
Asia Pacific: +86 0 400 820 6015
UK: +44 800 267 666

For additional support numbers please visit www.te.com

A-400 Series, Rated up to 400 Amps, 28 Vdc (Continued)

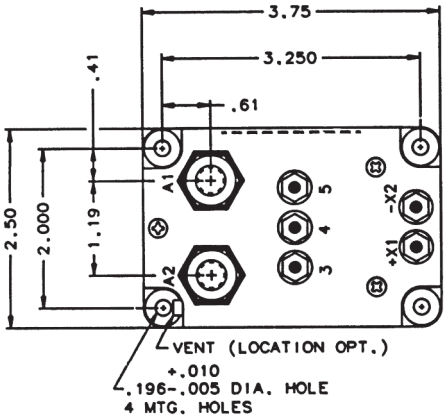

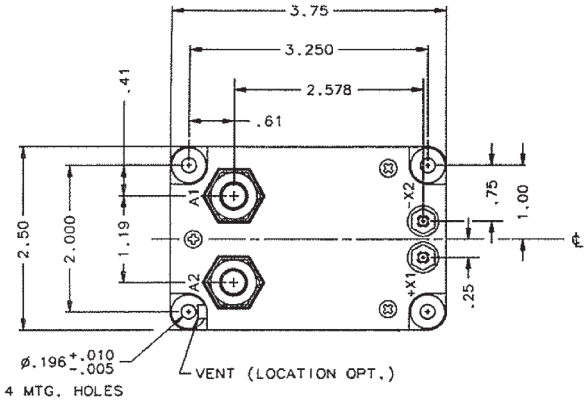

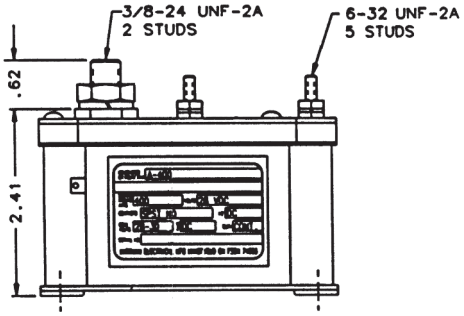

Mounting Style A

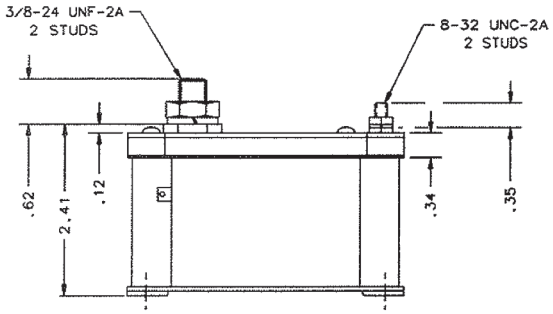

Mounting Style B

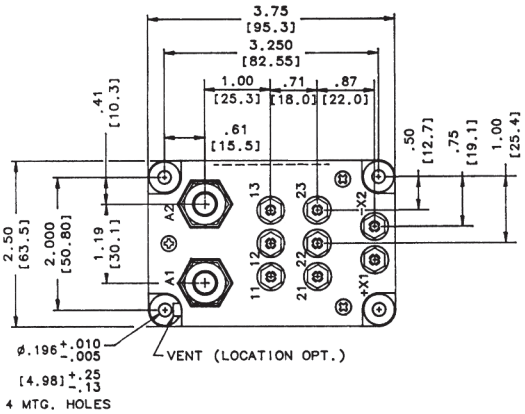

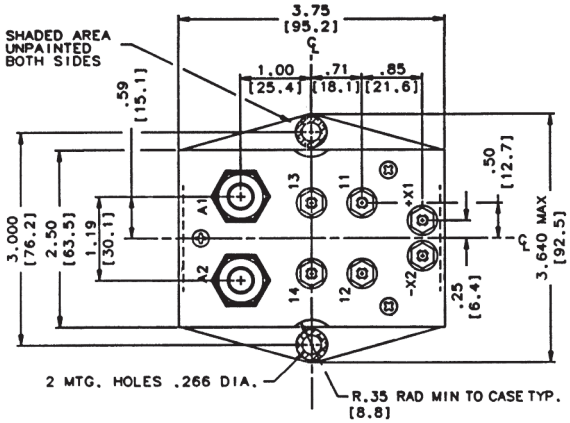

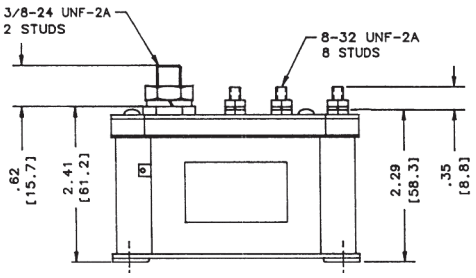

Mounting Style C

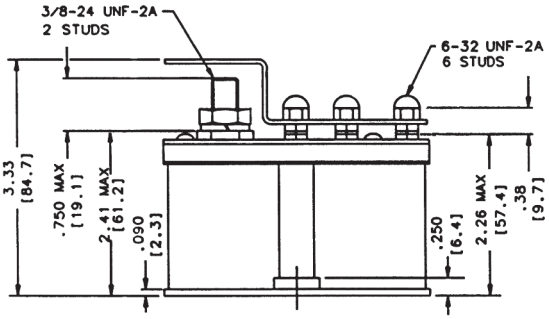

Mounting Style D

For factory-direct application assistance, phone 419-521-9500 or fax 419-526-2749.

Dimensions are shown for reference purposes only. Specifications subject to change.

Dimensions are in millimeters unless otherwise specified.

USA: +1 800 522 6752
Asia Pacific: +86 0 400 820 6015
UK: +44 800 267 666

For additional support numbers please visit www.te.com

A-400 Series, Rated up to 400 Amps, 28 Vdc (Continued)

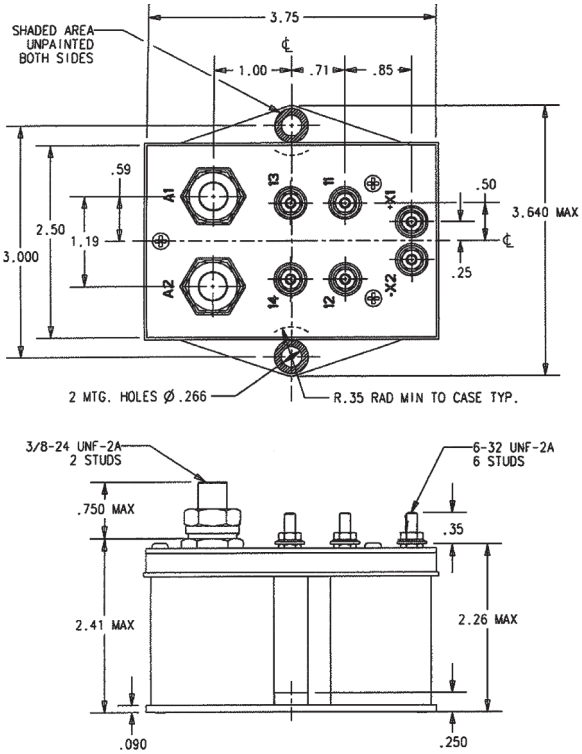

Mounting Style E

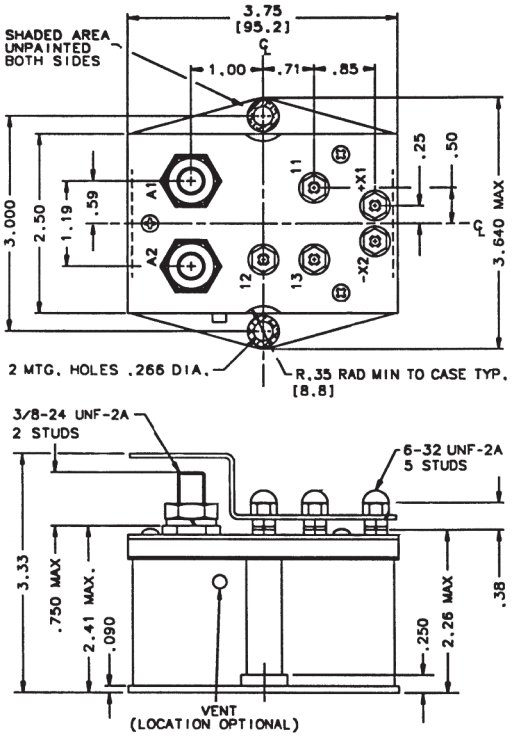

Mounting Style F

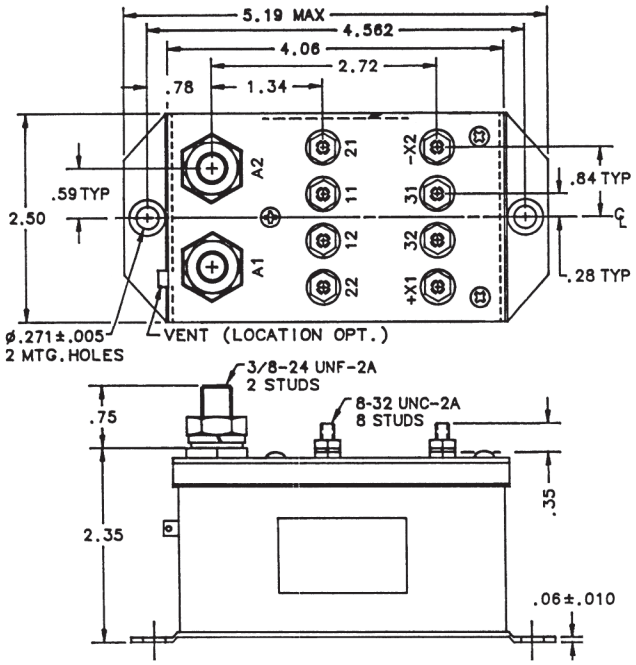

Mounting Style G

For factory-direct application assistance, phone 419-521-9500 or fax 419-526-2749.

Dimensions are shown for reference purposes only. Specifications subject to change.

Dimensions are in millimeters unless otherwise specified.

USA: +1 800 522 6752
Asia Pacific: +86 0 400 820 6015
UK: +44 800 267 666

For additional support numbers please visit www.te.com

A-400 Series, Rated up to 400 Amps, 28 Vdc (Continued)

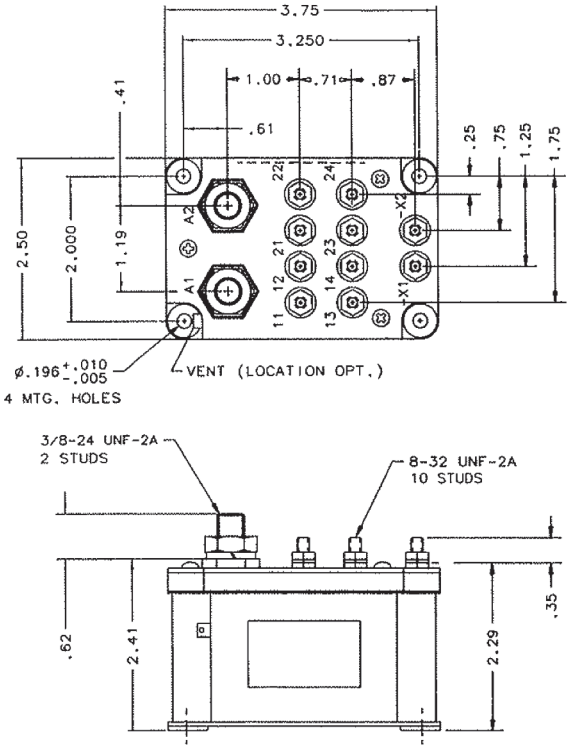

Mounting Style I

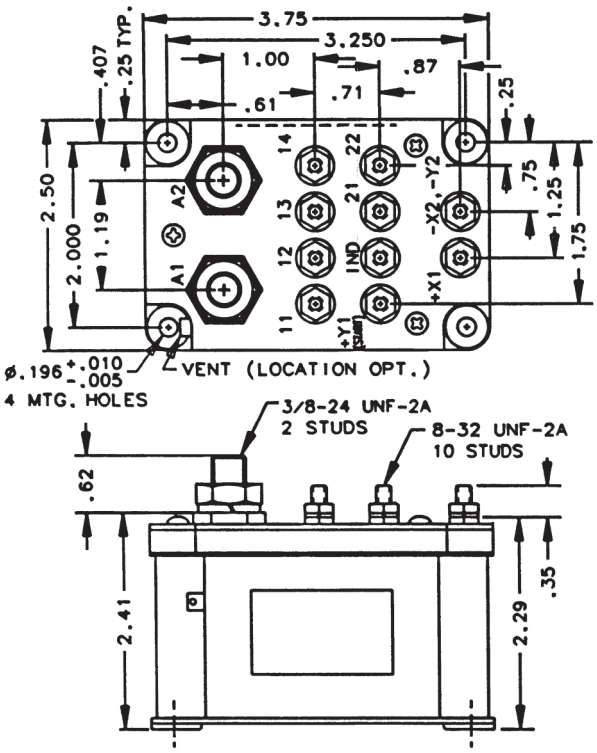

Mounting Style J

For factory-direct application assistance, phone 419-521-9500 or fax 419-526-2749.

Dimensions are shown for reference purposes only. Specifications subject to change.

Dimensions are in millimeters unless otherwise specified.

USA: +1 800 522 6752
Asia Pacific: +86 0 400 820 6015
UK: +44 800 267 666

For additional support numbers please visit www.te.com

A-400 Series, Rated up to 400 Amps, 28 Vdc (Continued)

Circuit Configurations (Consult factory for other available circuit configurations)

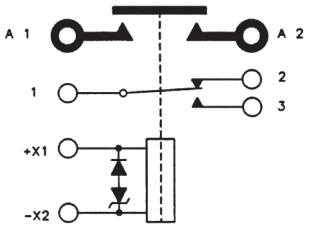

Circuit Configuration 1

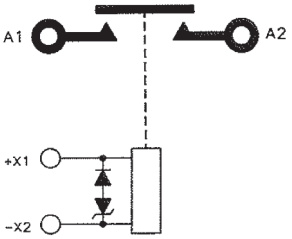

Circuit Configuration 2

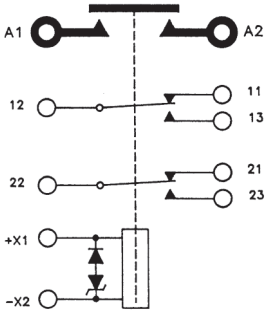

Circuit Configuration 3

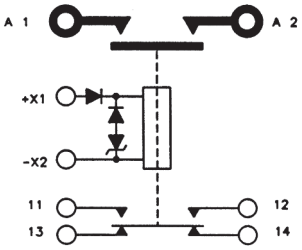

Circuit Configuration 4

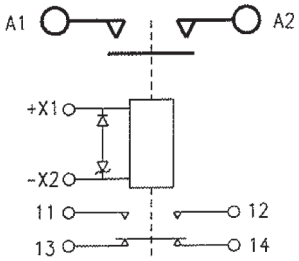

Circuit Configuration 5

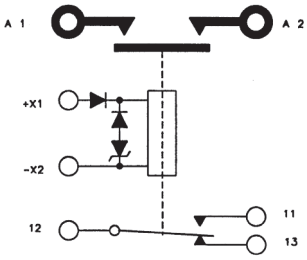

Circuit Configuration 6

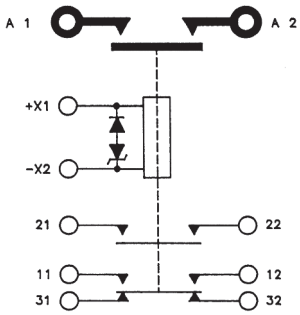

Circuit Configuration 7

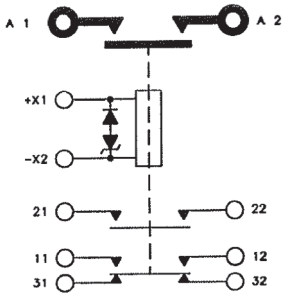

Circuit Configuration 8

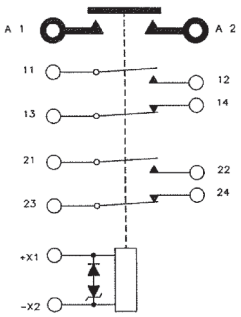

Circuit Configuration 9

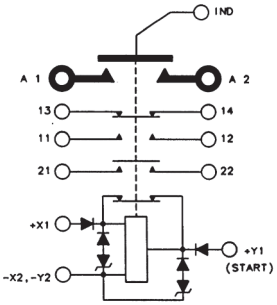

Circuit Configuration 10

HARTMAN Part Number	Construction Type	Mounting Style	Coil Type	Circuit Config.	TE Part Number
A-400A	Gasket/Vented	A	Intermittent	1	1-1616530-6
A-400AA	Gasket/Vented	B	Intermittent	2	1616056-2
A-400B	Gasket/Vented	C	Continuous	3	1616056-4
A-400D	Environ.	D	Continuous	4	1616056-5
A-400DB1	Environ.	E	Continuous	5	1-1616964-3
A-400DC	Gasket/Vented	F	Continuous	6	1616056-6
A-400G	Gasket/Vented	G	Intermittent	7	1616056-8
A-400G2	Gasket/Vented	G	Intermittent	8	6-1616949-1
A-400L	Gasket/Vented	I	Intermittent	9	1-1616530-5
A-400S	Gasket/Vented	J	Continuous/ Intermittent	10	1616056-9

For factory-direct application assistance, phone 419-521-9500 or fax 419-526-2749.

Catalog 5-1773450-5
Revised 3-13

www.te.com

Dimensions are shown for reference purposes only. Specifications subject to change.

Dimensions are in millimeters unless otherwise specified.

USA: +1 800 522 6752
Asia Pacific: +86 0 400 820 6015
UK: +44 800 267 666

For additional support numbers please visit www.te.com