A Series

XP Power

1 & 1.5W CONVECTION COOLED

DC-HVDC CONVERTER

The A Series is a broad line of ultra-miniature, DC to HV DC converters that set an industry standard in high voltage miniaturization. This unique package occupies less than one tenth of a cubic inch of volume, and an extremely low profile of only 0.250 inches (6.35mm).

Controllable output voltages range from 100 volts to 6000 volts. The output is directly proportional to the input voltage and is linear from <0.7V input to maximum input voltage, allowing for an adjustable output voltage. Output is load dependent. Isolation permits <±500V bias on output return. No external components or minimum load are required.

A separate high impedance control pin is standard and is designed for external error amplifier and/or DAC control in closed or open loop systems. Or simply connect the control pin to the + input for proportional input to output operation. These component-sized converters are ideal for applications requiring minimal size and weight.

Features

- Output voltages from 100V to 6000V
- Output Proportional to Input
- 0.7VDC Turn-on Voltage
- Extremely Low Profile <0.25”
- Input to Output Isolation
- Short Circuit Protection
- Control Pin
- No minimum load
- 3 Year Warranty

Typical Applications

- Avalanche Photo Diodes
- Photo Multiplier Tubes
- Electrophoresis
- Capacitor Charging
- Sustaining Ion Pumps
- Piezo Devices
- Handheld Instruments

Dimensions

All models:
Height x Width: 0.25 x 0.45" (6.35 x 11.43mm)

100V to 2000V outputs:
Length: 0.92" (23.37mm)

6000V outputs:
Length: 1.33" (33.78mm)

3000V to 5000V outputs:
Length: 1.13" (28.69mm)

Input

Characteristic	Minimum	Typical	Maximum	Units	Notes & Conditions
Input Voltage	0.7		5, 12, 24	VDC	See Models & Ratings table
Input Current			550	mA	See Models & Ratings table
Control Voltage Input	Analog Control Voltage adjusts output from 0 to 100%, not to exceed Input Voltage, see Application Notes on Page 8 for details				

Output

Characteristic	Minimum	Typical	Maximum	Units	Notes & Conditions
Output Voltage			6000	VDC	See Models & Ratings table
Output Current			15	mA	See Models & Ratings table
Output Voltage Tolerance		±10		%	At Max Vout, Full Load
Minimum Load	No minimum load required				
Regulation	Unregulated, Output is proportional to Input. See Application Notes				
Short Circuit Protection	Protected against short circuit conditions for a minimum 1 minute.				
Ripple and Noise			5	%	See Models & Ratings table

Environmental

Characteristic	Minimum	Typical	Maximum	Units	Notes & Conditions
Operating Temperature (case)	-25		+75	°C	Standing operating temp, all models
Operating Temperature (case)	-55		+85	°C	Extended operating temp, -T models
Storage Temperature	-55		+105	°C	
Cooling	Natural convection				
Humidity			95	%RH	Non-condensing

Safety Approvals

Safety Agency	Standard	Notes & Conditions
UL	IEC/UL/CSA/EN 62368	
CE	Meets all applicable directives	
RoHS	RoHS 2 and 3 Directive (2011/65/EU)	Where applicable

General

Characteristic	Minimum	Typical	Maximum	Units	Notes & Conditions
Isolation: Input to Output			500	V	<±500VDC Bias on Output Return
Leakage Current			100	mA	
Switching Frequency	50		350	kHz	
Construction	Solid vacuum encapsulation, UL 94 V-0 rated				
Mean Time Between Failure	1.862			Mhrs	Per Bellcore TR 332

Notes:

1. Maximum output current is available at maximum rated output voltage, and derates linearly as input voltage is decreased.
2. Output Voltage is load dependent. Under light or no-load conditions, reduce the Input Voltage so maximum rated Output Voltage is not exceeded.
3. Specifications are after 30 minute warm-up, full-load at 25°C, unless otherwise noted.
4. Proper thermal management techniques are required to maintain safe case temperature at maximum power output.

Block Diagram

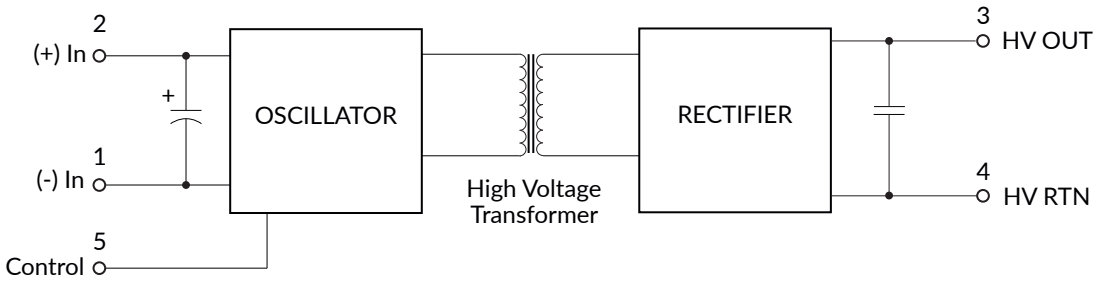

Pin	Function
1	(-) Input
2	(+) Input
3	HV Out
4	HV RTN
5	Control

Models & Ratings

Model Number	Output Voltage	Output Current	input Voltage	Input Current		Ripple
				No Load	Full Load	
A01N-5	0 to -100V	10mA	5V	<300mA	<500mA	<5%
A01N-12	0 to -100V	10mA	12V	<100mA	<185mA	<5%
A01N-12T	0 to -100V	10mA	12V	<100mA	<185mA	<5%
A01N-24T	0 to -100V	10mA	24V	<25mA	<60mA	<5%
A01P-5T	0 to +100V	10mA	5V	<300mA	<500mA	<5%
A01P-12	0 to +100V	10mA	12V	<100mA	<185mA	<5%
A01P-12T	0 to +100V	10mA	12V	<100mA	<185mA	<5%
A01P-24T	0 to +100V	10mA	24V	<25mA	<60mA	<5%
A02N-5	0 to -200V	5mA	5V	<300mA	<500mA	<1%
A02N-5T	0 to -200V	5mA	5V	<300mA	<500mA	<1%
A02N-12	0 to -200V	5mA	12V	<100mA	<185mA	<1%
A02N-12T	0 to -200V	5mA	12V	<100mA	<185mA	<1%
A02N-24	0 to -200V	5mA	24V	<25mA	<60mA	<1%
A02N-24T	0 to -200V	5mA	24V	<25mA	<60mA	<1%
A02P-5	0 to +200V	5mA	5V	<300mA	<500mA	<1%
A02P-5T	0 to +200V	5mA	5V	<300mA	<500mA	<1%
A02P-12	0 to +200V	5mA	12V	<100mA	<185mA	<1%
A02P-12T	0 to +200V	5mA	12V	<100mA	<185mA	<1%
A02P-24	0 to +200V	5mA	24V	<25mA	<60mA	<1%
A02P-24T	0 to +200V	5mA	24V	<25mA	<60mA	<1%
A025P-5	0 to +250V	4mA	5V	<300mA	<500mA	<0.9%
A03N-12	0 to -300V	3.33mA	12V	<100mA	<185mA	<0.7%
A03P-12	0 to +300V	3.33mA	12V	<100mA	<185mA	<0.7%
A03P-12T	0 to +300V	3.33mA	12V	<100mA	<185mA	<0.7%
A04N-12T	0 to -400V	2.5mA	12V	<100mA	<185mA	<0.5%
A04P-5	0 to +400V	2.5mA	5V	<300mA	<500mA	<0.5%
A04P-12T	0 to +400V	2.5mA	12V	<100mA	<185mA	<0.5%
A05N-12	0 to -500V	2mA	12V	<100mA	<185mA	<0.5%
A05P-5	0 to +500V	2mA	5V	<300mA	<500mA	<0.5%
A05P-5T	0 to +500V	2mA	5V	<300mA	<500mA	<0.5%
A05P-12	0 to +500V	2mA	12V	<100mA	<185mA	<0.5%
A05P-12T	0 to +500V	2mA	12V	<100mA	<185mA	<0.5%
A06N-5	0 to -600V	1.67mA	5V	<300mA	<500mA	<1%
A06N-12	0 to -600V	1.67mA	12V	<100mA	<185mA	<1%

Models & Ratings

Model Number	Output Voltage	Output Current	input Voltage	Input Current		Ripple
				No Load	Full Load	
A06P-5	0 to +600V	1.67mA	5V	<300mA	<500mA	<1%
A06P-5T	0 to +600V	1.67mA	5V	<300mA	<500mA	<1%
A07N-24	0 to -700V	1.43mA	24V	<25mA	<60mA	<1%
A08N-24	0 to -800V	1.25mA	24V	<25mA	<60mA	<1%
A08P-5	0 to +800V	1.25mA	5V	<300mA	<500mA	<1%
A08P-12	0 to +800V	1.25mA	12V	<100mA	<185mA	<1%
A10N-12	0 to -1000V	1mA	12V	<100mA	<185mA	<0.8%
A10P-5	0 to +1000V	1mA	5V	<300mA	<500mA	<0.8%
A10P-5T	0 to +1000V	1mA	5V	<300mA	<500mA	<0.8%
A10P-12	0 to +1000V	1mA	12V	<100mA	<185mA	<0.8%
A12N-5	0 to -1200V	0.83mA	5V	<300mA	<500mA	<0.5%
A12N-12	0 to -1200V	0.83mA	12V	<100mA	<185mA	<0.5%
A12N-24	0 to -1200V	0.83mA	24V	<25mA	<60mA	<0.5%
A12P-12	0 to +1200V	0.83mA	12V	<100mA	<185mA	<0.5%
A12P-5	0 to +1200V	0.83mA	5V	<300mA	<500mA	<0.5%
A15N-12	0 to -1500V	0.66mA	12V	<100mA	<185mA	<0.4%
A15N-24T	0 to -1500V	0.66mA	24V	<25mA	<60mA	<0.4%
A15N-5	0 to -1500V	0.66mA	5V	<300mA	<500mA	<0.4%
A15P-5	0 to +1500V	0.66mA	5V	<300mA	<500mA	<0.4%
A15P-12	0 to +1500V	0.66mA	12V	<100mA	<185mA	<0.4%
A15P-24	0 to +1500V	0.66mA	24V	<25mA	<60mA	<0.4%
A15P-24T	0 to +1500V	0.66mA	24V	<25mA	<60mA	<0.4%
A20N-5	0 to -2000V	0.5mA	5V	<300mA	<500mA	<0.3%
A20N-12T	0 to -2000V	0.5mA	12V	<100mA	<185mA	<0.3%
A20P-5	0 to +2000V	0.5mA	5V	<300mA	<500mA	<0.3%
A20P-12	0 to +2000V	0.5mA	12V	<100mA	<185mA	<0.3%
A20P-12T	0 to +2000V	0.5mA	12V	<100mA	<185mA	<0.3%
A30N-5	0 to -3000V	0.33mA	5V	<300mA	<500mA	<0.3%
A30N-5T	0 to -3000V	0.33mA	5V	<300mA	<500mA	<0.3%
A30N-12	0 to -3000V	0.33mA	12V	<100mA	<185mA	<0.3%
A30N-24	0 to -3000V	0.33mA	24V	<25mA	<60mA	<0.3%
A30P-5	0 to +3000V	0.33mA	5V	<300mA	<500mA	<0.3%
A30P-5T	0 to +3000V	0.33mA	5V	<300mA	<500mA	<0.3%
A30P-12	0 to +3000V	0.33mA	12V	<100mA	<185mA	<0.3%
A30P-24	0 to +3000V	0.33mA	24V	<25mA	<60mA	<0.3%
A40N-5	0 to -4000V	0.25mA	5V	<300mA	<500mA	<0.3%
A40N-5T	0 to -4000V	0.25mA	5V	<300mA	<500mA	<0.3%
A40P-5	0 to +4000V	0.25mA	5V	<300mA	<500mA	<0.3%
A40P-5T	0 to +4000V	0.25mA	5V	<300mA	<500mA	<0.3%
A50N-5	0 to -5000V	0.20mA	5V	<300mA	<500mA	<0.3%
A50N-5T	0 to -5000V	0.20mA	5V	<300mA	<500mA	<0.3%
A50P-5	0 to +5000V	0.20mA	5V	<300mA	<500mA	<0.3%
A50P-5T	0 to +5000V	0.20mA	5V	<300mA	<500mA	<0.3%
A60N-5	0 to -6000V	0.16mA	5V	<300mA	<500mA	<0.3%
A60P-5	0 to +6000V	0.16mA	5V	<300mA	<500mA	<0.3%
A60P-5T	0 to +6000V	0.16mA	5V	<300mA	<500mA	<0.3%
AH Models - 1.5W						
AH01N-12	0 to -100V	15mA	12V	<125mA	<250mA	<2%
AH01N-24	0 to -100V	15mA	24V	<40mA	<120mA	<2%
AH01P-12	0 to +100V	15mA	12V	<125mA	<250mA	<2%
AH02N-5	0 to -200V	7.5mA	5V	<300mA	<550mA	<3%
AH02N-12	0 to -200V	7.5mA	12V	<125mA	<250mA	<3%

Models & Ratings

Model Number	Output Voltage	Output Current	input Voltage	Input Current		Ripple
				No Load	Full Load	
AH02P-5	0 to +200V	7.5mA	5V	<300mA	<550mA	<3%
AH02P-24	0 to +200V	7.5mA	24V	<40mA	<120mA	<3%
AH025P-5	0 to +250V	6mA	5V	<300mA	<550mA	<1.2%
AH025P-12	0 to +250V	6mA	12V	<125mA	<250mA	<1.2%
AH03N-12	0 to -300V	5mA	12V	<125mA	<250mA	<0.7%
AH03P-5	0 to +300V	5mA	5V	<300mA	<550mA	<0.7%
AH03P-24	0 to +300V	5mA	24V	<40mA	<120mA	<0.7%
AH04N-12	0 to -400V	3.75mA	12V	<125mA	<250mA	<0.8%
AH04P-12	0 to +400V	3.75mA	12V	<125mA	<250mA	<0.8%
AH05N-5	0 to -500V	3mA	5V	<300mA	<550mA	<0.7%
AH05N-12	0 to -500V	3mA	12V	<125mA	<250mA	<0.75%
AH05P-5	0 to +500V	3mA	5V	<300mA	<550mA	<0.7%
AH05P-12	0 to +500V	3mA	12V	<125mA	<250mA	<0.7%
AH06N-5	0 to -600V	2.5mA	5V	<300mA	<550mA	<2%
AH06P-5	0 to +600V	2.5mA	5V	<300mA	<550mA	<2%
AH08P-5	0 to +800V	1.87mA	5V	<300mA	<550mA	<1.2%
AH09N-5	0 to -900V	1.67mA	5V	<300mA	<550mA	<1.2%
AH09P-24	0 to +900V	1.67mA	24V	<40mA	<120mA	<1.2%
AH10N-12	0 to -1000V	1.5mA	12V	<125mA	<250mA	<1%
AH10P-12	0 to +1000V	1.5mA	12V	<125mA	<250mA	<1%
AH12N-5	0 to -1200V	1.25mA	5V	<300mA	<550mA	<0.6%
AH12P-24	0 to +1200V	1.25mA	24V	<40mA	<120mA	<0.6%
AH15P-5	0 to +1500V	1mA	5V	<300mA	<550mA	<0.6%
AH15P-24	0 to +1500V	1mA	24V	<40mA	<120mA	<0.6%
AH20N-12	0 to -2000V	0.75mA	12V	<125mA	<250mA	<0.5%
AH20P-5	0 to +2000V	0.75mA	5V	<300mA	<550mA	<0.5%
AH20P-12	0 to +2000V	0.75mA	12V	<125mA	<250mA	<0.5%
AH30N-5	0 to -3000V	0.5mA	5V	<300mA	<550mA	<0.3%
AH30N-24	0 to -3000V	0.5mA	24V	<40mA	<120mA	<0.3%
AH30P-5	0 to +3000V	0.5mA	5V	<300mA	<550mA	<0.3%
AH30P-12	0 to +3000V	0.5mA	12V	<125mA	<250mA	<0.3%
AH60N-5	0 to -6000V	0.25mA	5V	<300mA	<550mA	<0.3%
AH60P-5	0 to +6000V	0.25mA	5V	<300mA	<550mA	<0.3%

Notes:

-T represents extended temperature model

Mechanical Details

100V - 2000V

Top View

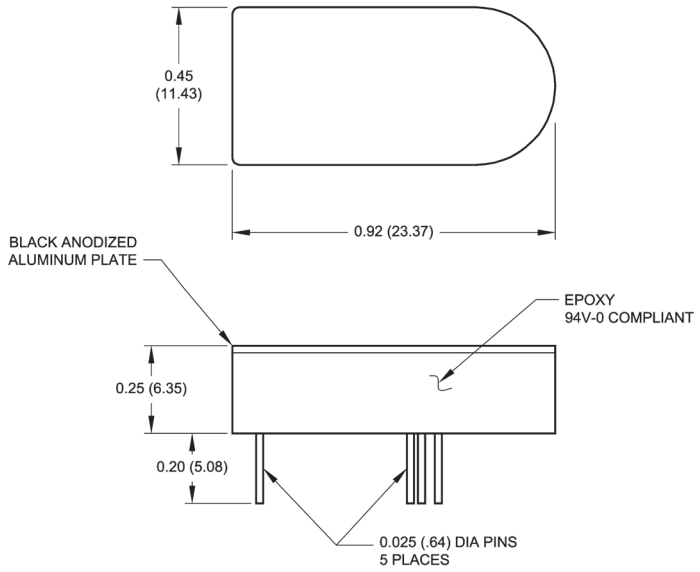

Bottom View

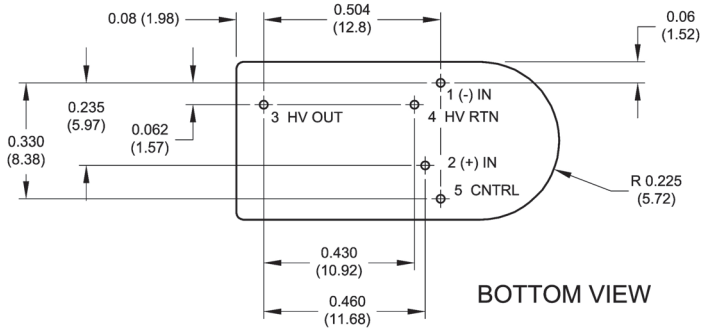

Recommended Layout

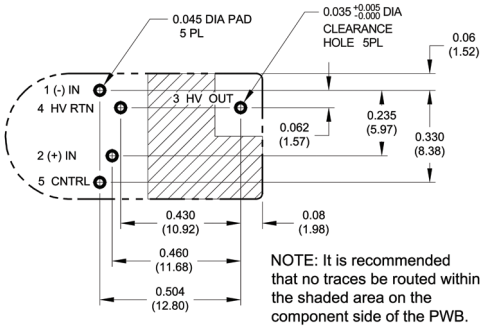

Notes:

1. All dimensions are in inches (mm)
2. Weight <0.2oz (5.66g)
3. Tolerance: X.XX±0.02 (0.51)
4. Pin Tolerance: ±0.005 (0.127)

Mechanical Details

3000V - 5000V

Top View

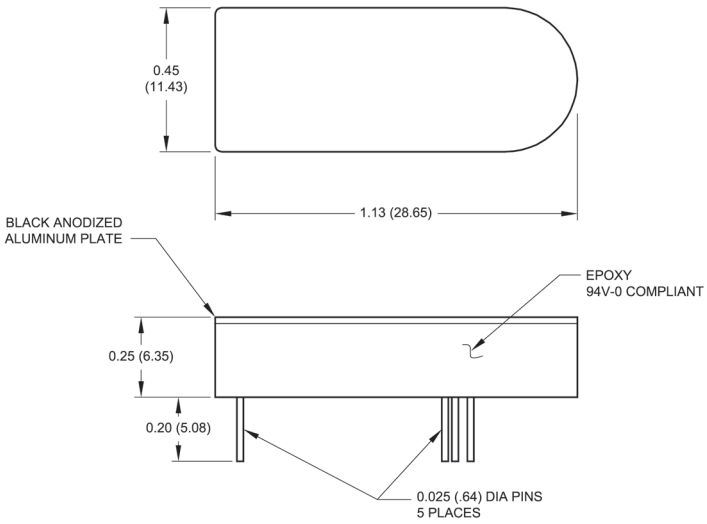

Bottom View

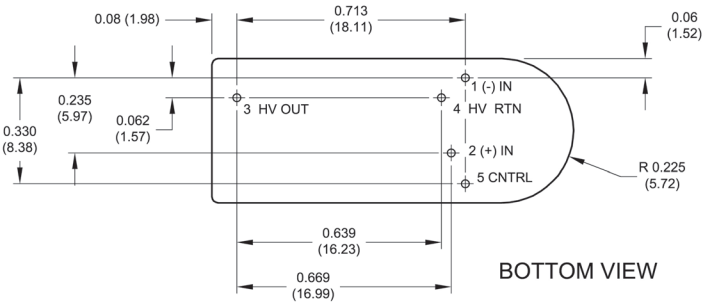

Recommended Layout

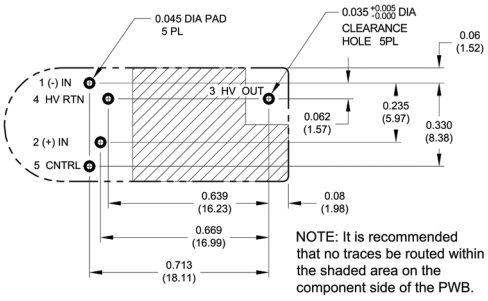

Notes:

1. All dimensions are in inches (mm)
2. Weight 0.25oz (7.09g)
3. Tolerance: X.XX±0.02 (0.51)
4. Pin Tolerance: ±0.005 (0.127)

Mechanical Details

6000V

Top View

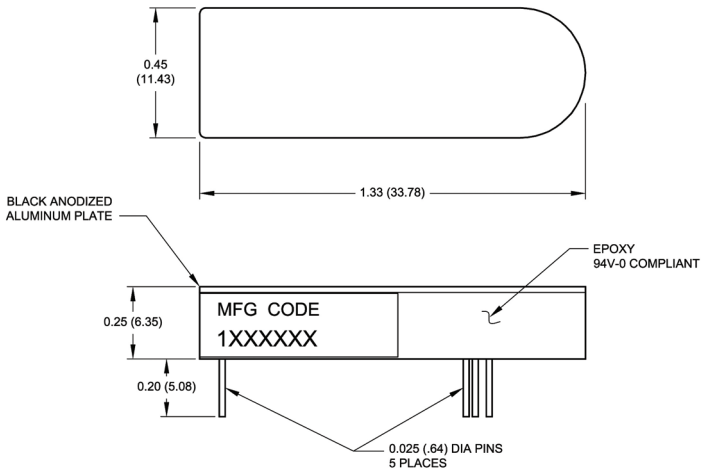

Bottom View

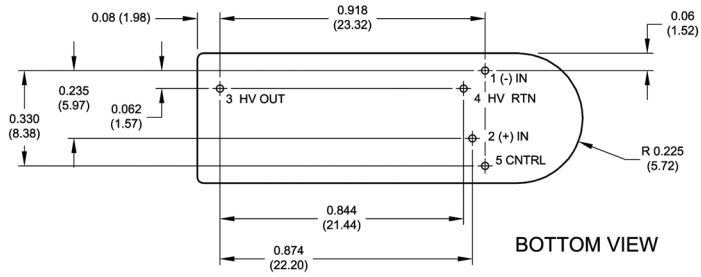

Recommended Layout

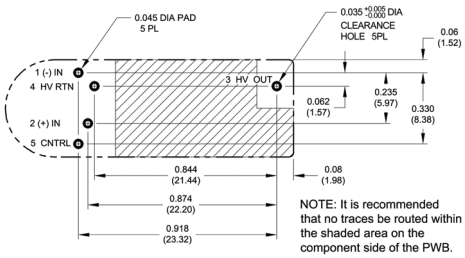

RECOMMENDED LAYOUT

Notes:

1. All dimensions are in inches (mm)
2. Weight <0.3oz (8.49g)
3. Tolerance: X.XX±0.02 (0.51)
4. Pin Tolerance: ±0.005 (0.127)

Application Notes

Typical HV Output vs. Control Voltage

For proportional operation, tie the control pin to the input voltage, or use separately for control as shown below. Do not leave floating.

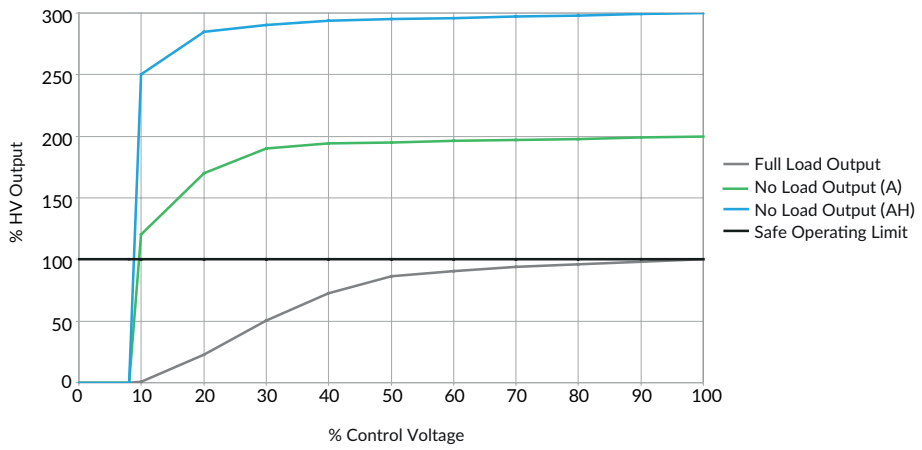
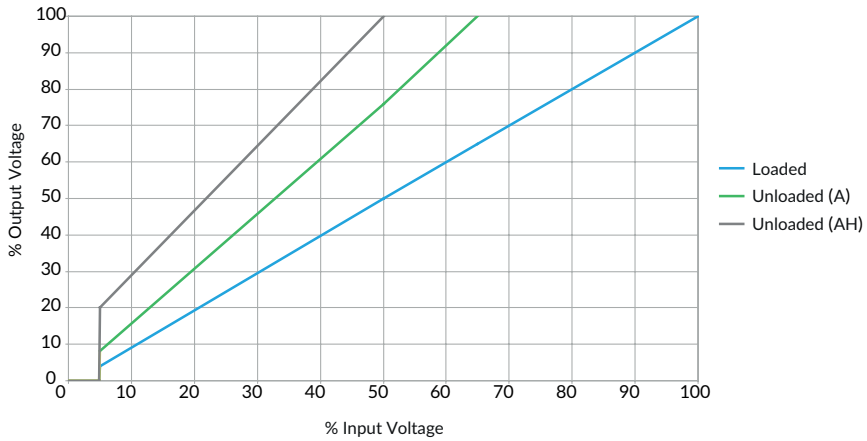
Typical Output vs. Input Voltage