TAOGLAS®

Datasheet

Bolt

Part No:
A.120.A.101111

Description

All-Band GNSS Active Permanent Mount Antenna

Features:

Dual Stage LNA
Bands Covered:

- GPS (L1/L2/L5)
- IRNSS (L5)
- QZSS (L1/L2C/L5/L6)
- Galileo (E1/E5a/E5b/E6)
- GLONASS (G1/G2/G3)
- BeiDou (B1/B2a/B2b/B3)
- L-Band

Dimensions: Ø94 x 26mm
Cable: 1m RG-174, Connector: SMA(M)
Permanent Mount, IP67 Waterproof Rated Enclosure
RoHS & REACH Compliant

1.	Introduction	2
2.	Specification	3
3.	Antenna Characteristics	5
4.	Radiation Patterns	8
5.	Active Circuitry Performance	17
6.	Field Test Results	21
7.	Mechanical Drawing	23
8.	Packaging	24
	Changelog	25

Taoglas makes no warranties based on the accuracy or completeness of the contents of this document and reserves the right to make changes to specifications and product descriptions at any time without notice. Taoglas reserves all rights to this document and the information contained herein. Reproduction, use or disclosure to third parties without express permission is strictly prohibited.

Ireland & USA
ISO 9001:2015
Certified

Taiwan
ISO 9001:2015
Certified

046

IATF16949

1. Introduction

The Taoglas Bolt A.120 is an active multi-band GNSS antenna has been carefully designed to work well on the full GNSS spectrum and the L-Band for correction services. This allows the user to achieve higher location accuracy, as well as stability of position tracking in urban environments meaning a better overall GNSS system for the user.

The A.120 Bolt has excellent performance across the full bandwidth of the antenna and its design has an even gain across the hemisphere giving almost excellent, broad axial ratio which in turn makes it resilient to multipath rejection and excellent phase centre stability.

The LNA used in the A.120 ensures excellent out of band rejection and provides excellent positioning stability and reliability of GNSS signals. The robust, covert, permanent mount IP67 rated ASA enclosure is just 26mm in height designed for ease of installation. It can be mounted on any surface; however, performance can be affected when mounted on metal surfaces.

Typical Applications Include:

- Autonomous Driving
- Precision Positioning for Robotics
- Precision Agriculture
- Telematics & Asset Tracking

The A.120 is the latest external addition to an ongoing product road map of high precision antennas by Taoglas. For RTK applications when used on the base and/or the rover, the A.120 can achieve genuine cm-level accuracy. View the embedded antennas used in the A.120 and similar below:

- GPDF6010.A
- AGPDFD6010.A
- AA.250

Cable and connectors are customizable. Please contact your regional Taoglas customer support team for further information.

2. Specification

GNSS Frequency Bands					
GPS	L1 1575.42 MHz	L2 1227.6 MHz	L5 1176.45 MHz		
	■	■	■		
GLONASS	G1 1602 MHz	G2 1248 MHz	G3 1207 MHz		
	■	■	■		
Galileo	E1 1575.24 MHz	E5a 1176.45 MHz	E5b 1201.5 MHz	E6 1278.75 MHz	
	■	■	■	■	
BeiDou	B1C 1575.42 MHz	B1I 1561 MHz	B2a 1176.45 MHz	B2b 1207.14 MHz	B3 1268.52 MHz
	■	■	■	■	■
L-Band	L-Band 1542 MHz				
	■				
QZSS (Regional)	L1 1575.42 MHz	L2C 1227.6 MHz	L5 1176.45 MHz	L6 1278.75e6	
	■	■	■	■	
IRNSS (Regional)	L5 1176.45 MHz				
	■				
SBAS	L1/E1/B1 1575.42 MHz	L5/B2a/E5a 1176.45 MHz	G1 1602 MHz	G2 1248 MHz	G3 1207 MHz
	■	■	■	■	■

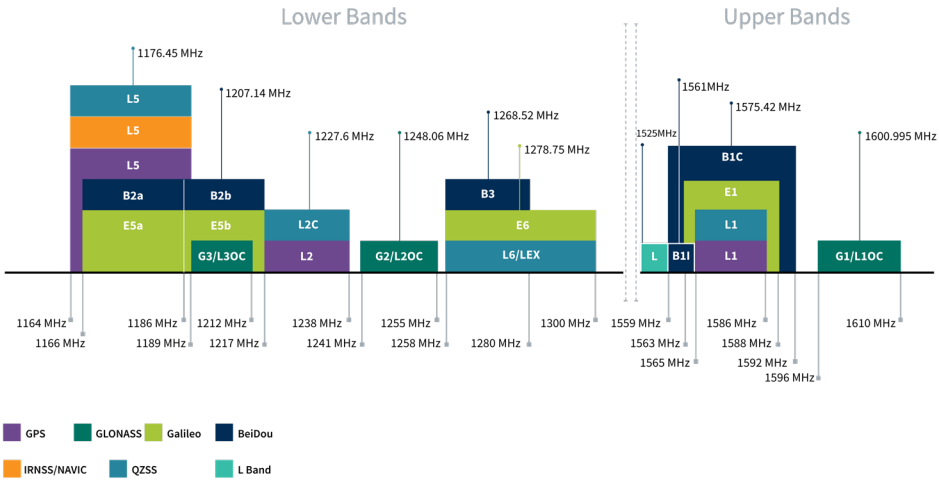

GNSS Bands and Constellations

GNSS Electrical

Frequency (MHz)	1176.45	1201.55	1227.6	1248	1268.52	1278.75	1542	1561	1575.42	1602
VSWR (max.)	1.5:1		1.5:1	1.5:1	1.5:1	1.5:1	1.5:1	1.5:1	1.5:1	1.5:1
Passive Antenna Efficiency (%)	20	31	40	40	30	20	38	53	50	38
Passive Antenna Gain at Zenith (dBic)	-1.5	0.5	1.8	1.2	-0.1	-1.5	2.6	4.2	4.0	2.7
Axial Ratio (dB)	0.71	0.24	0.22	0.4	0.43	1.24	1.29	1.3	1.31	1.37
PCO	1.10	1.00	0.95	1.03	1.13	1.15	0.49	0.33	0.28	0.30
PCV	0.06	0.05	0.08	0.11	0.16	0.24	0.29	0.40	0.40	0.35
Polarization	RHCP									
Impedance	50Ω									

LNA and Filter Electrical Properties

Frequency (MHz)	1176.45	1201.55	1227.6	1248	1268.52	1278.75	1542	1561	1575.42	1602
Gain (dB)	27.6	28.8	28.7	26.7	23.1	21.7	30.2	30.2	30.7	29.8
Noise Figure (dB)	3.1	3.1	3.1	3.1	3.1	3.1	1.7	1.6	1.6	1.6
Group Delay (ns)	12.6	10.3	10.3	11.4	12.8	8.6	8.0	7.8	7.7	8.3
P1dB (dBm)	-24.5	-24.3	-24.2	-22.8	-21.8	-21.0	-25.5	-24.9	-24.6	-24.2
Current Draw (Typ.)	16-21 mA									
Voltage Range (Typ.)	+1.8 ~ +5.5V									

Mechanical

Dimensions	94.3mm, Height: 26mm
Weight	283.5g
Material	ASA
Connector	SMA(M)
Cable	RG-174
Thread Diameter	M20

Environmental

Operation Temperature	-40°C - +85°C
Storage Temperature	-40°C - +85°C

3. Antenna Characteristics

3.1 Axial Ratio

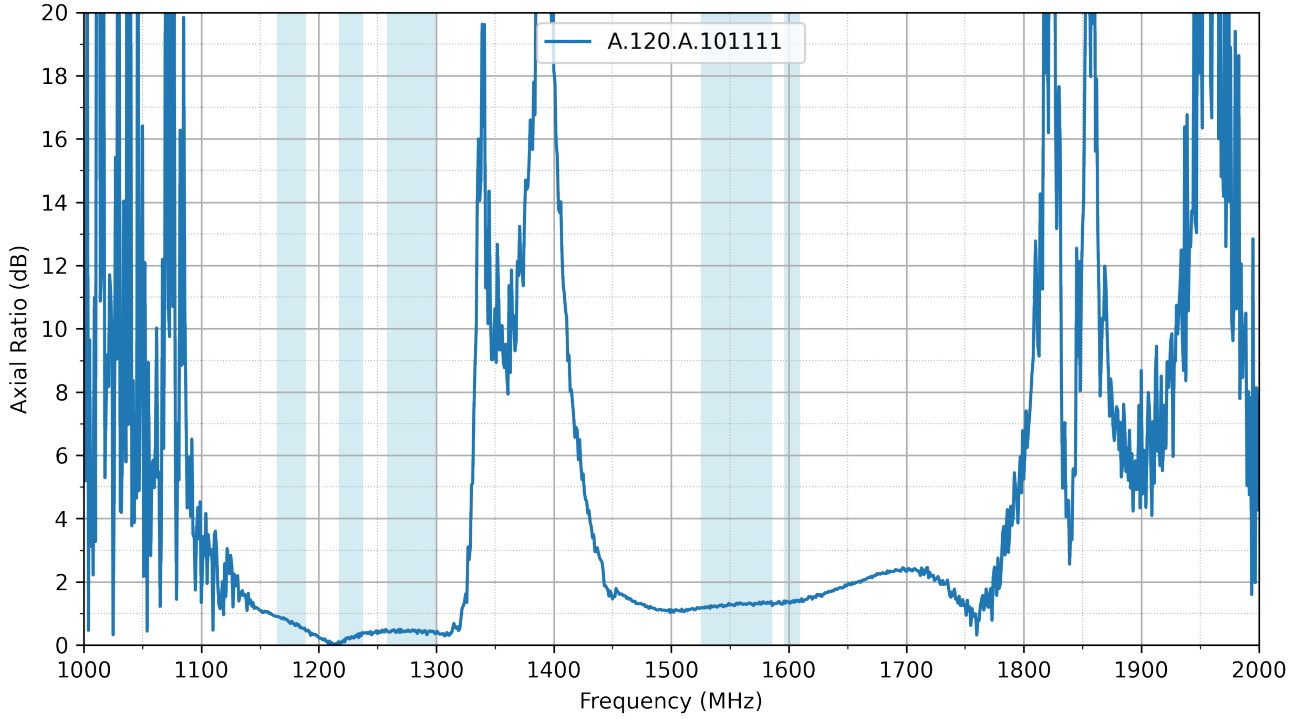

3.2 Axial Ratio vs Angle for Phi=0

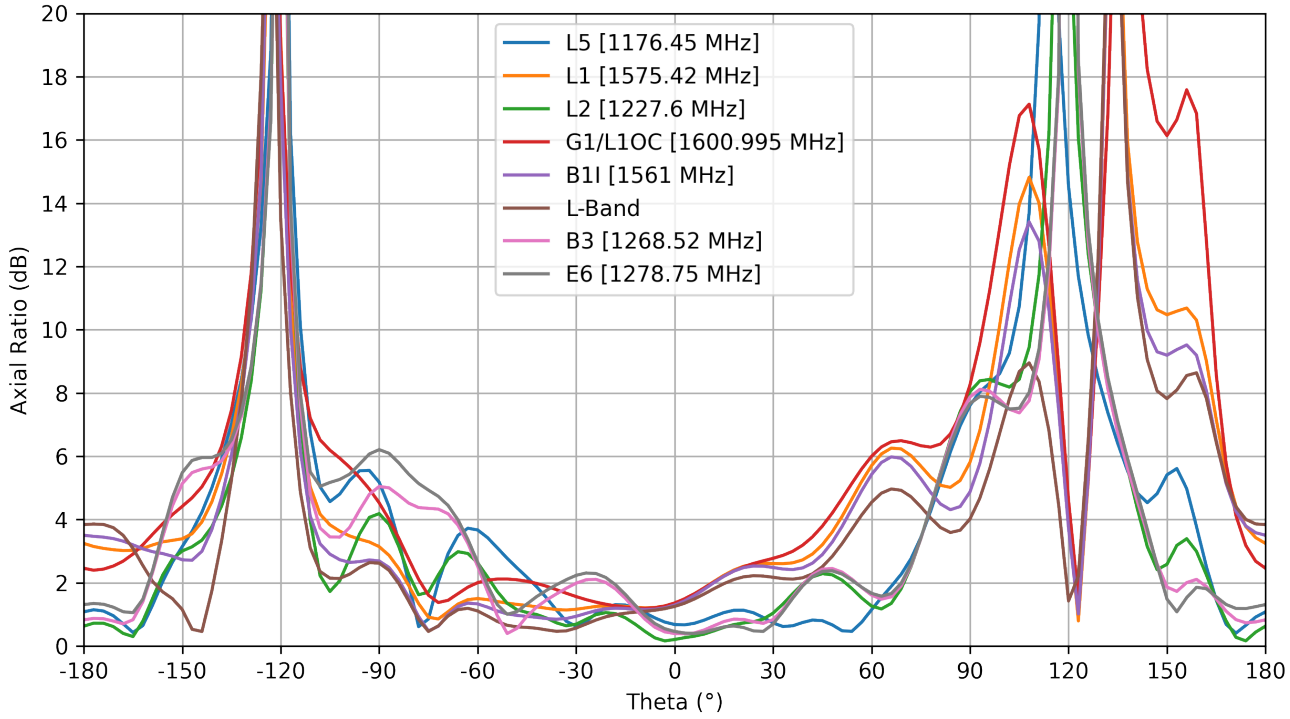

3.3 Axial Ratio vs Angle for Phi=90

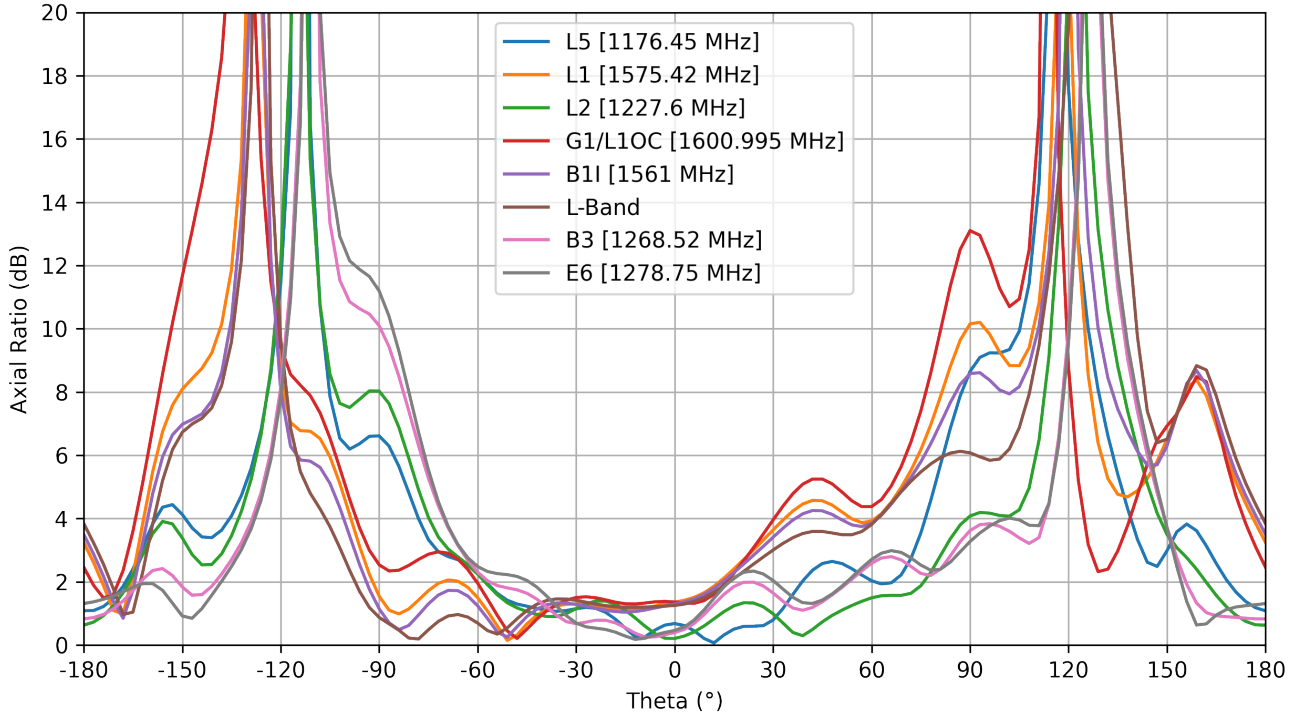

3.4 PCO

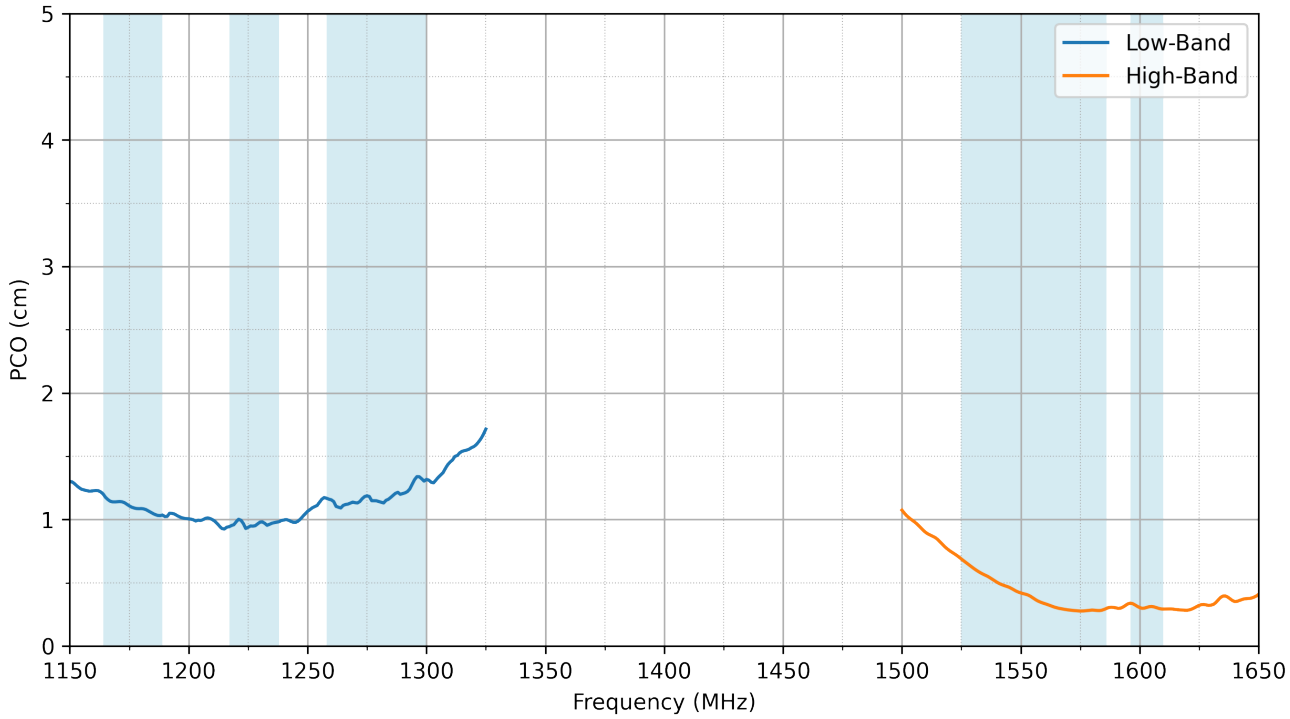

3.5 PCV

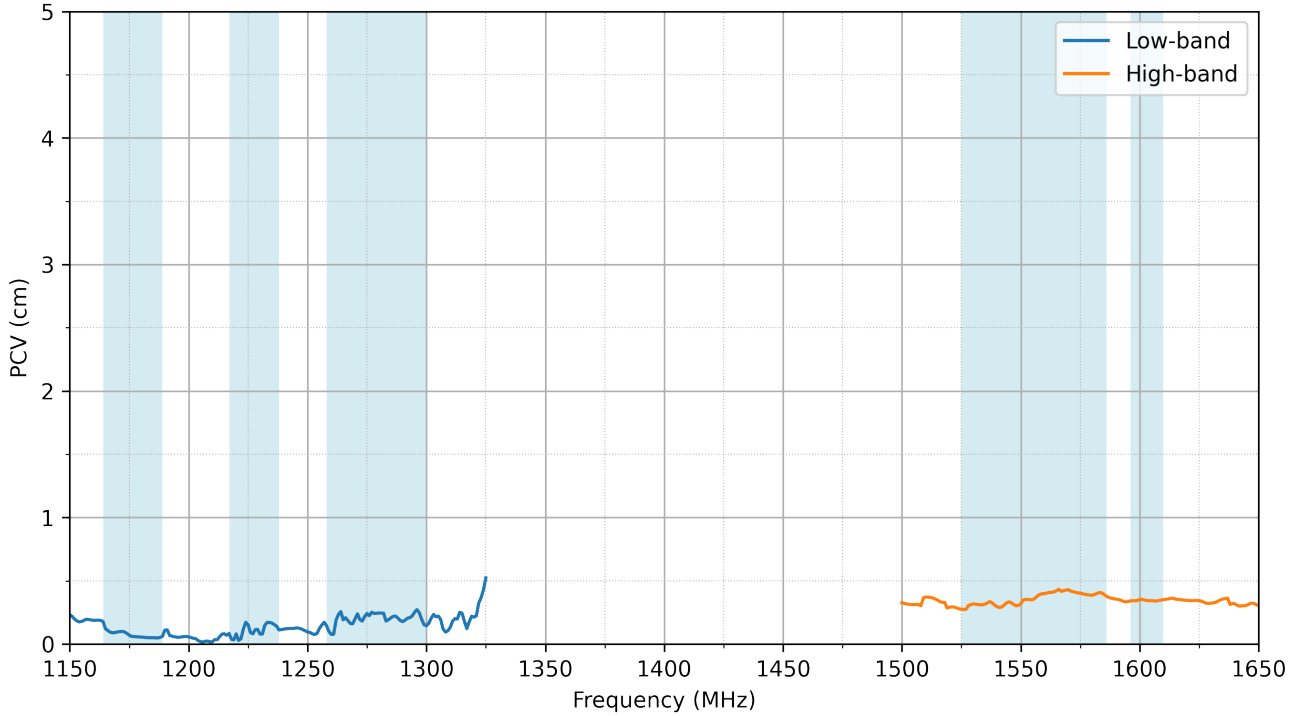
Low-band
High-band
PCV (cm)
Frequency (MHz)
0
1
2
3
4
5
1150
1200
1250
1300
1350
1400
1450
1500
1550
1600
1650

4. Radiation Patterns

4.1 Test Setup

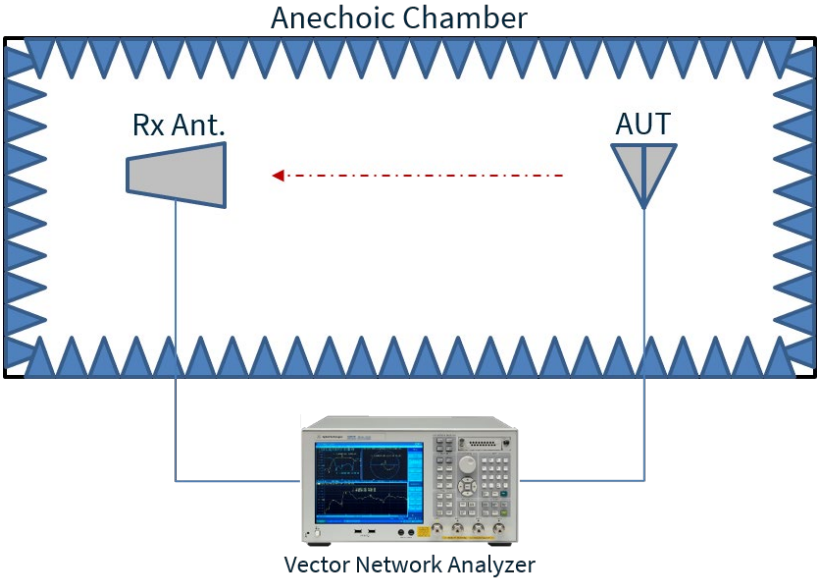

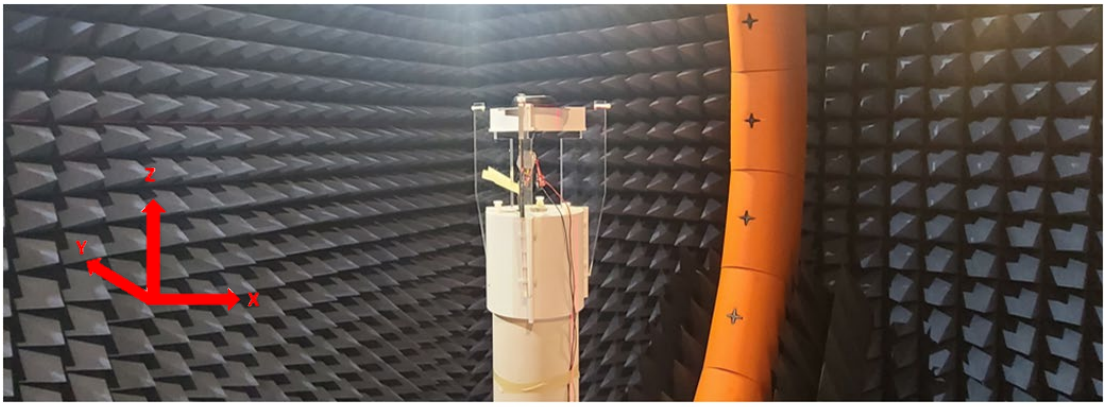

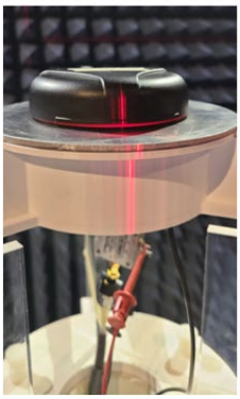

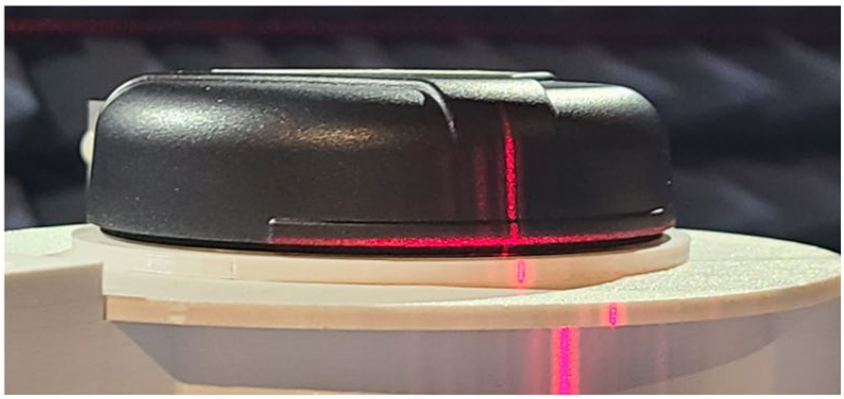

4.2 Patterns at 1176 MHz

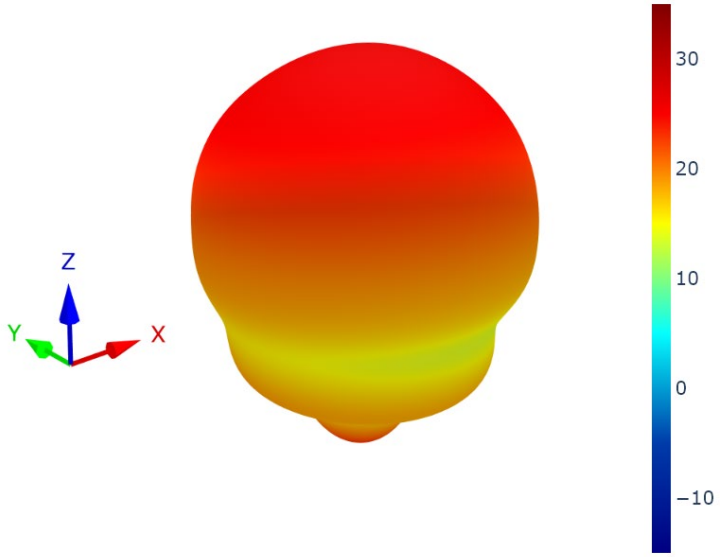

XZ Plane	YZ Plane	XY Plane

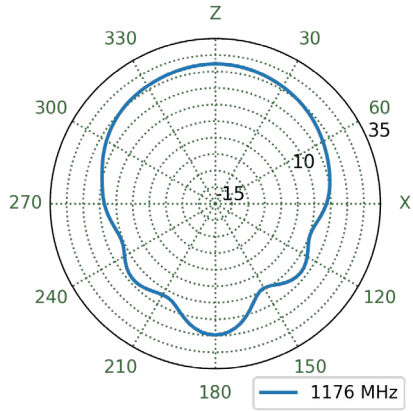

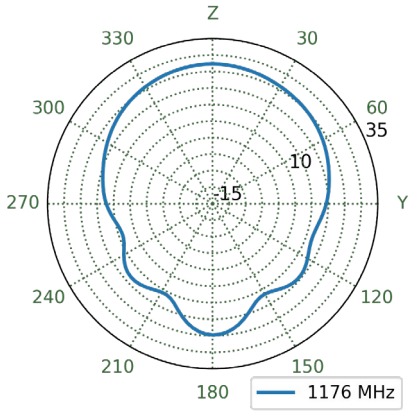

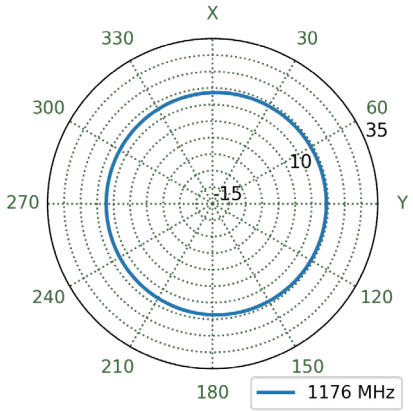

4.3 Patterns at 1227 MHz

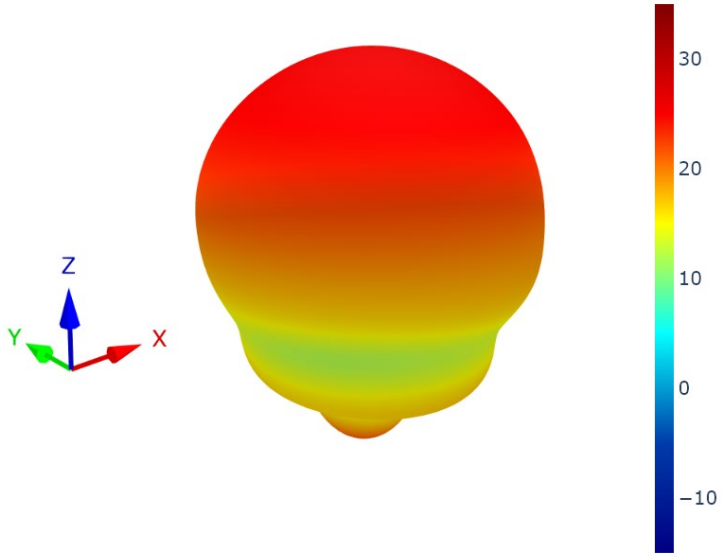

XZ Plane	YZ Plane	XY Plane

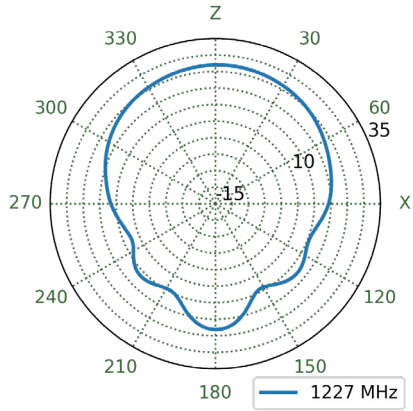

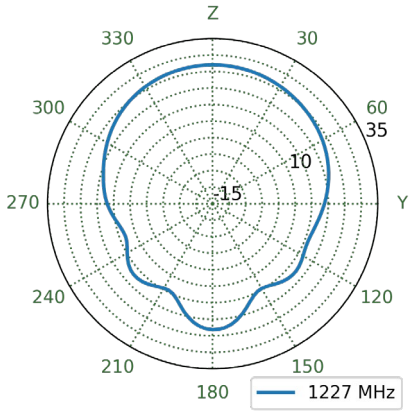

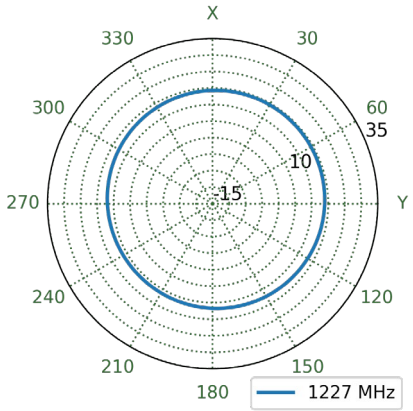

4.4 Patterns at 1269 MHz

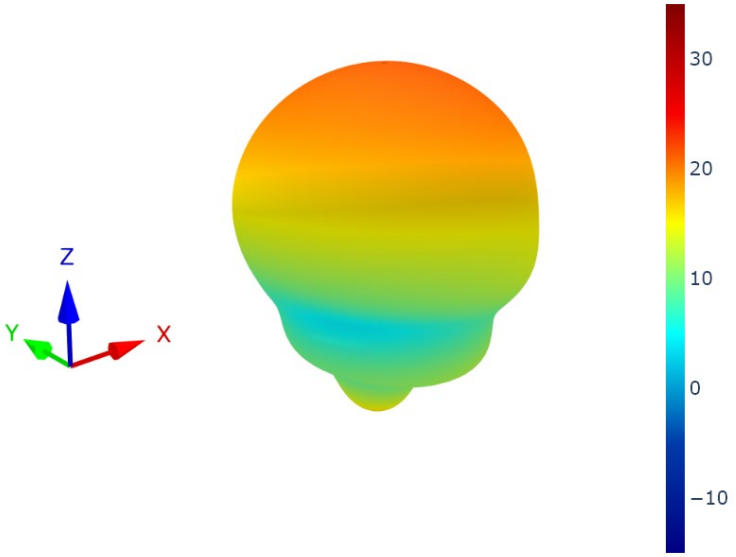

XZ Plane	YZ Plane	XY Plane

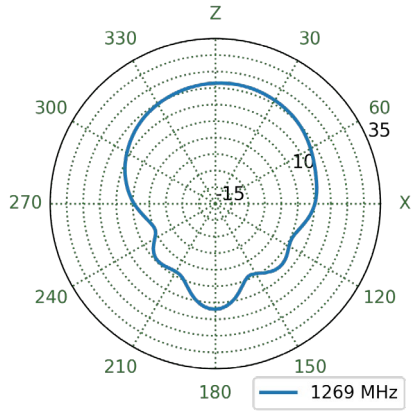

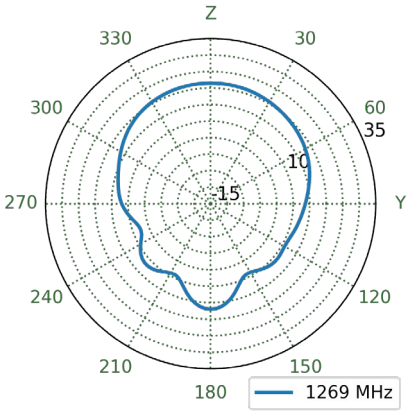

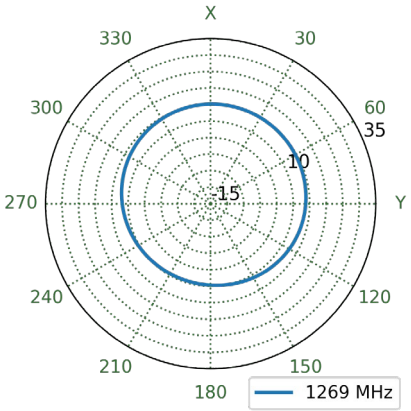

4.5 Patterns at 1279 MHz

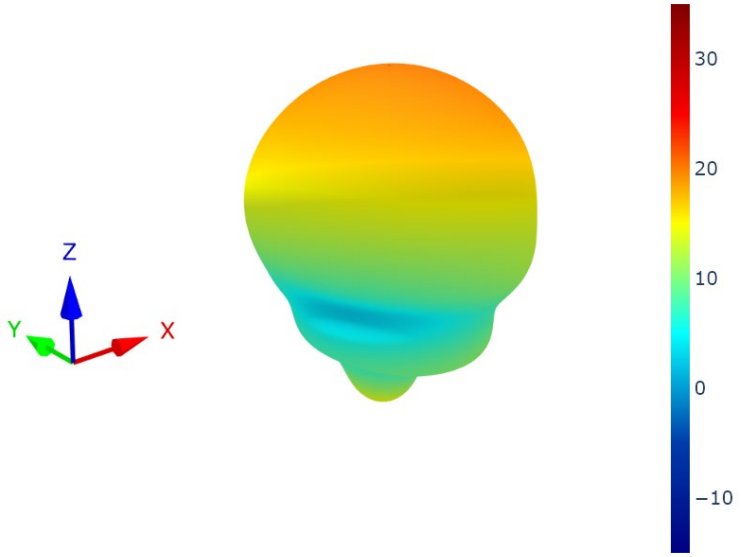

XZ Plane	YZ Plane	XY Plane

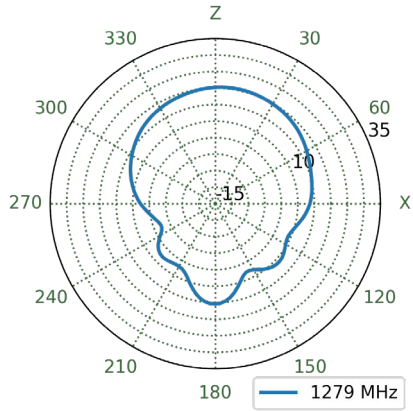

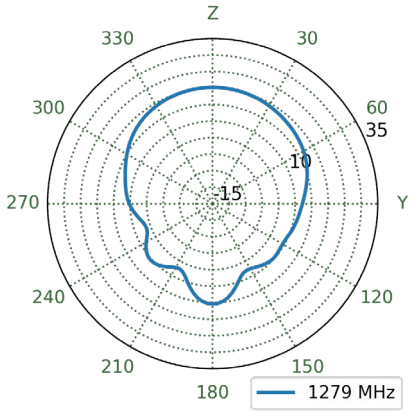

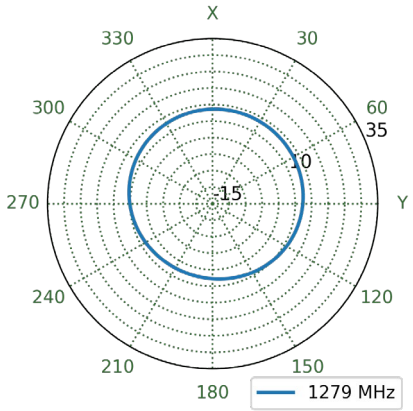

4.6 Patterns at 1542 MHz

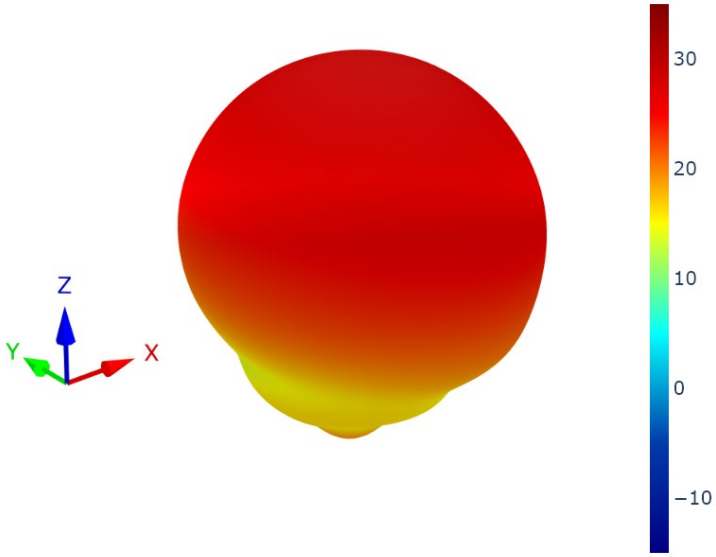

XZ Plane	YZ Plane	XY Plane

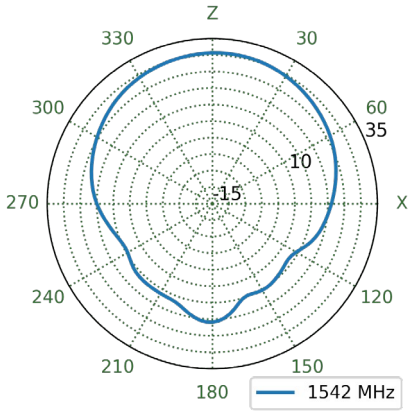

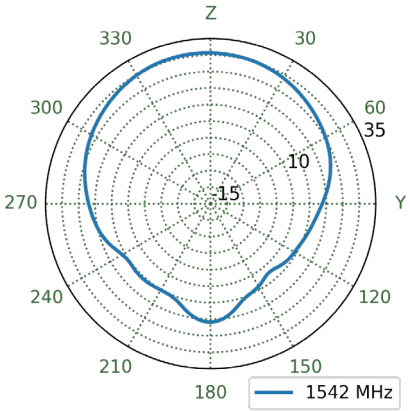

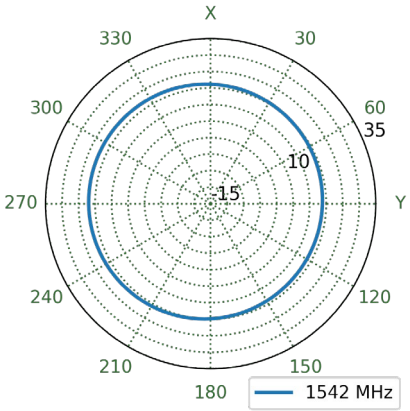

4.7 Patterns at 1562 MHz

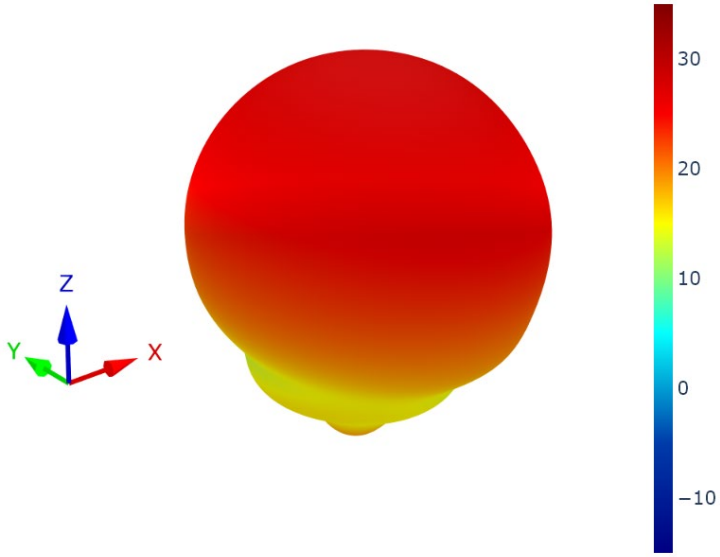

XZ Plane	YZ Plane	XY Plane

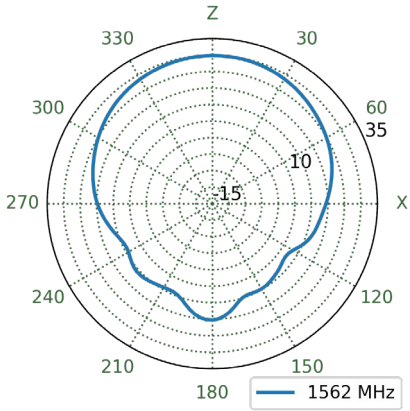

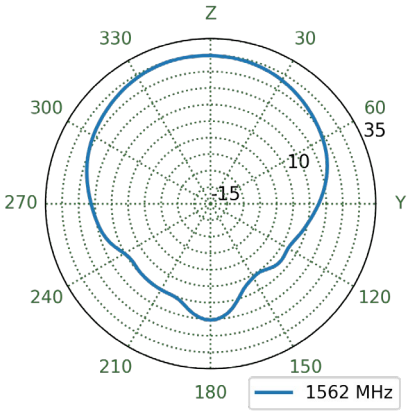

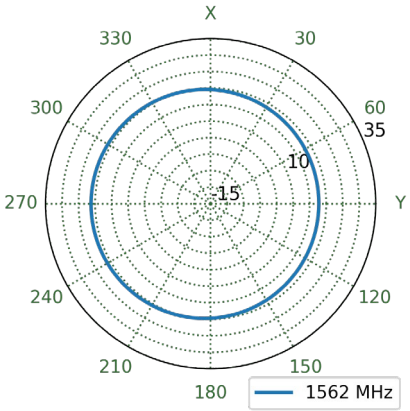

4.8 Patterns at 1575 MHz

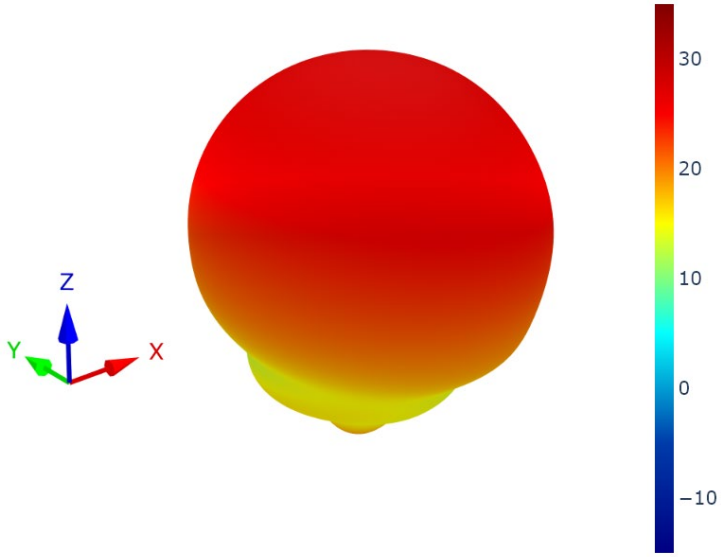

XZ Plane	YZ Plane	XY Plane

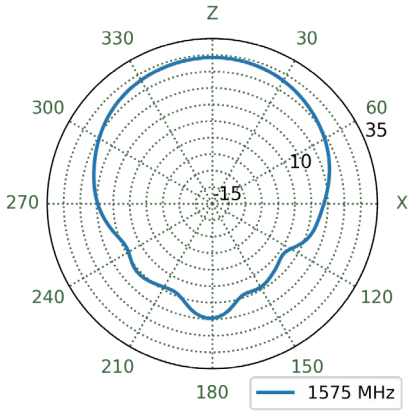

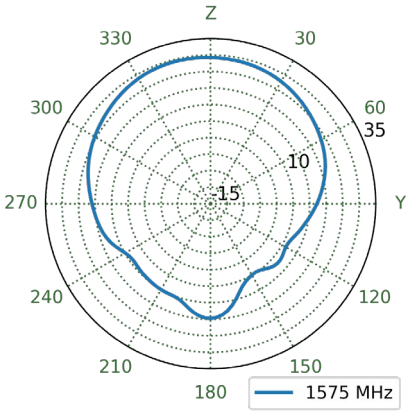

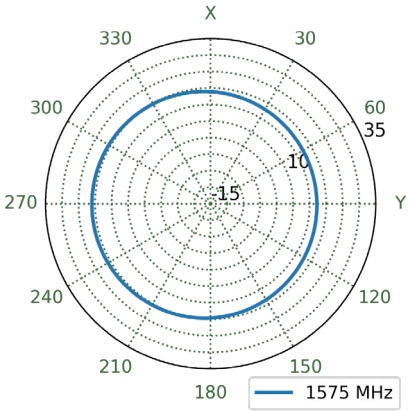

4.9 Patterns at 1603 MHz

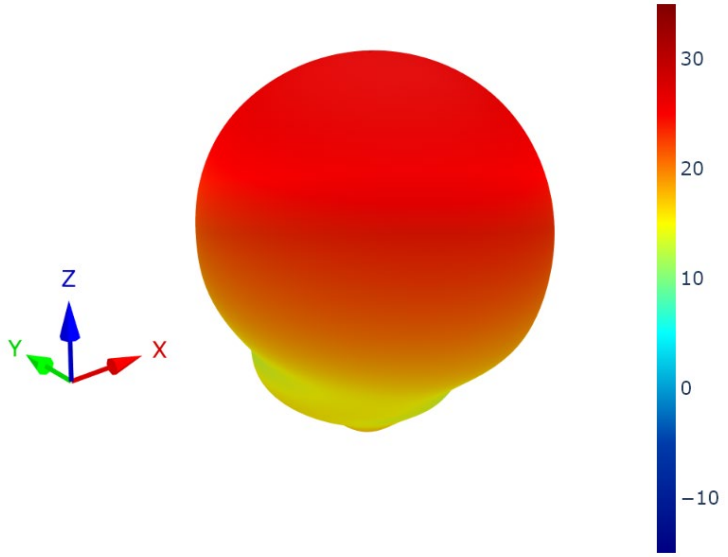

XZ Plane	YZ Plane	XY Plane

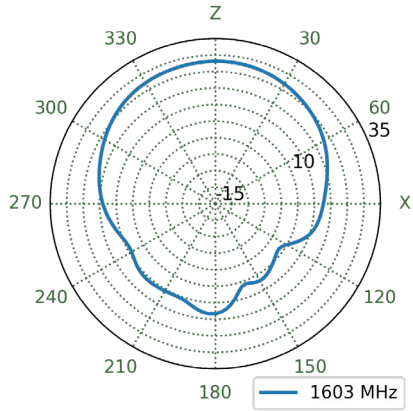

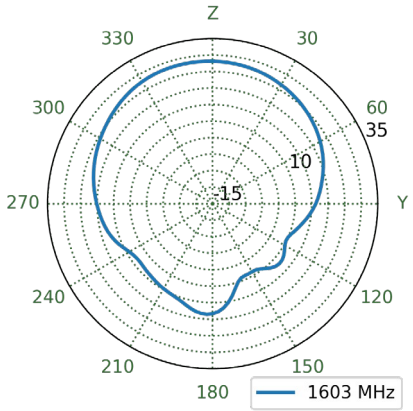

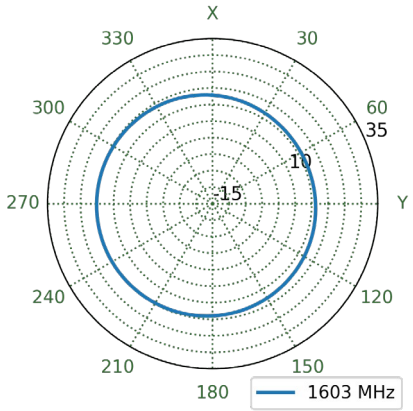

5. Active Circuitry Performance

5.1 Block Diagram

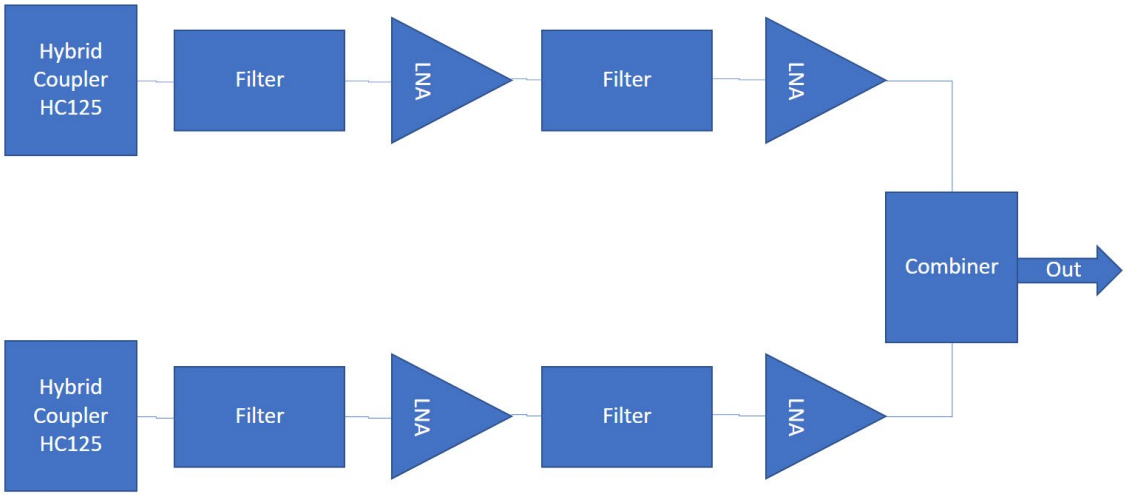

5.2 Wideband Gain Plot

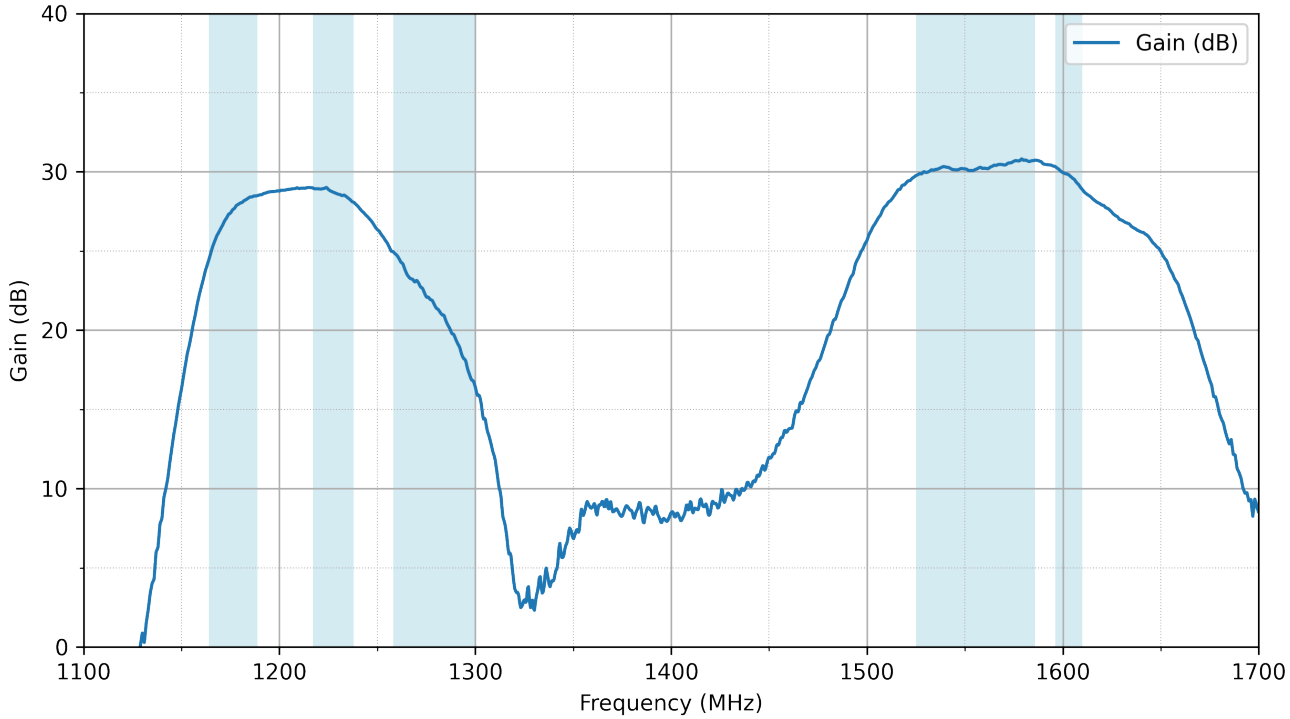

5.3 Gain Plot – Low-Band

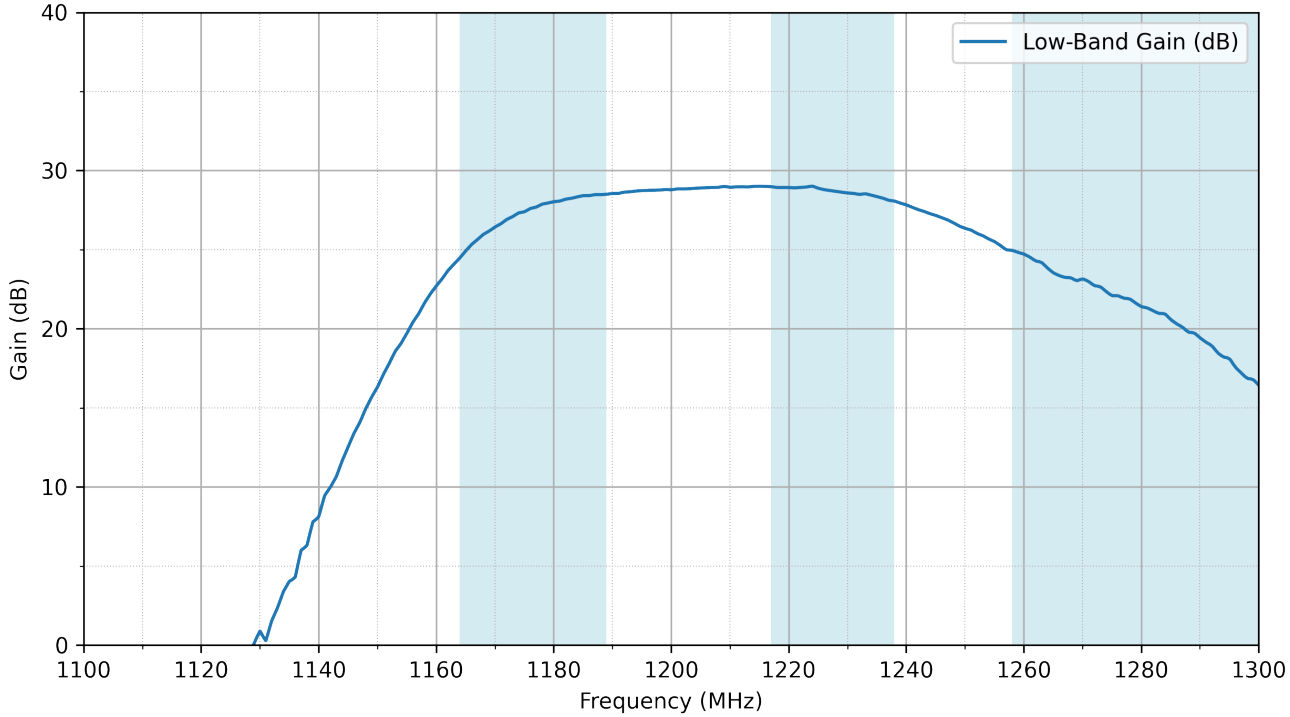

5.4 Gain Plot – High-Band

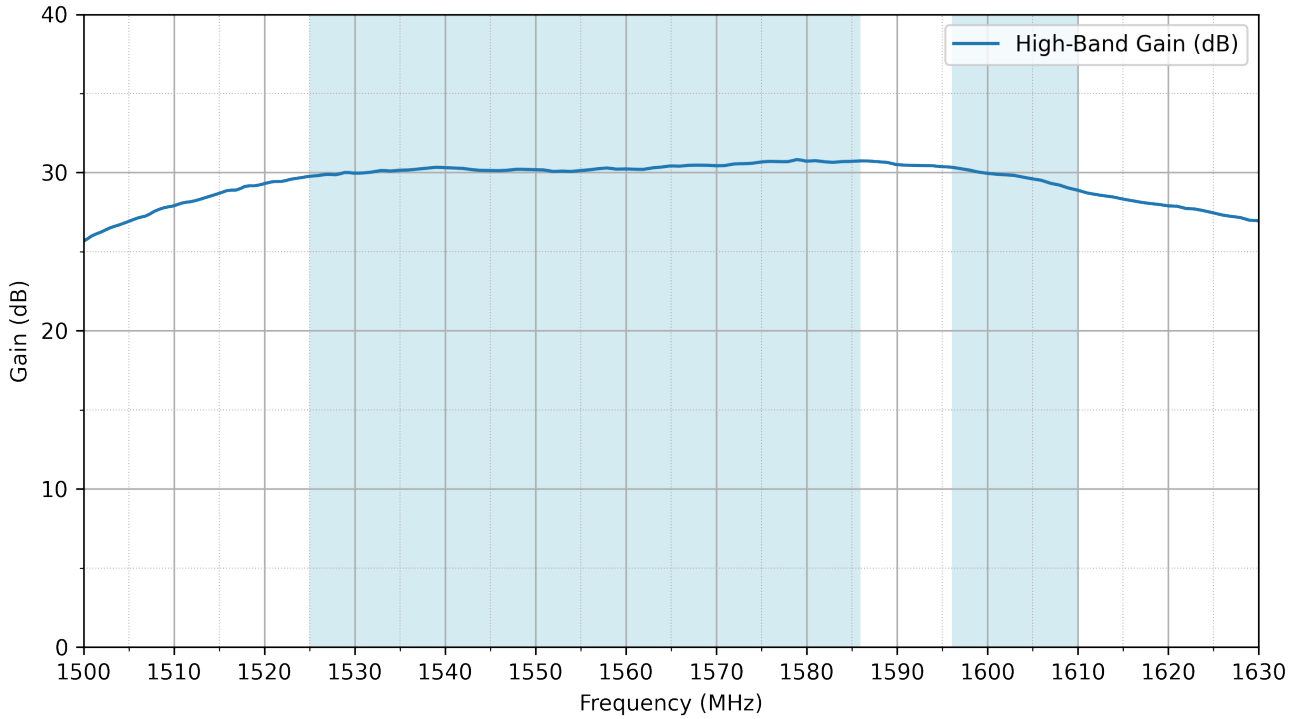

5.5 Noise Figure (Low-Band)

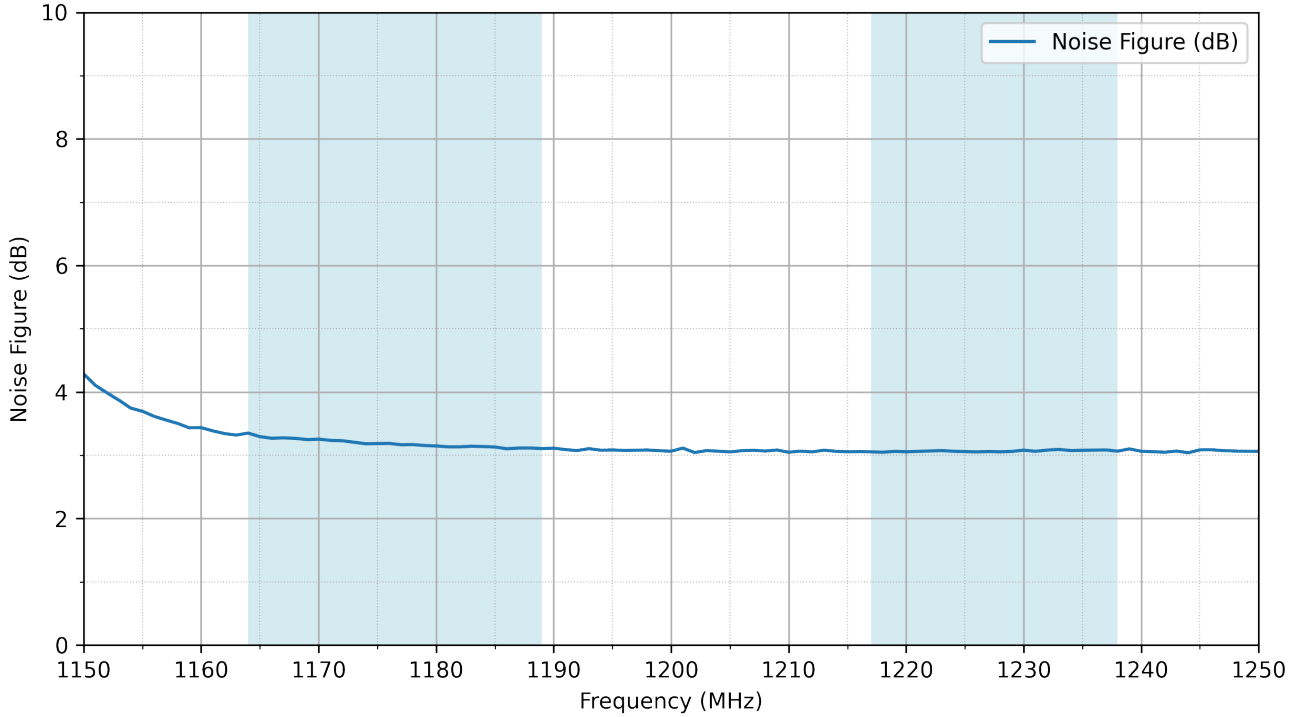

5.6 Noise Figure (High-Band)

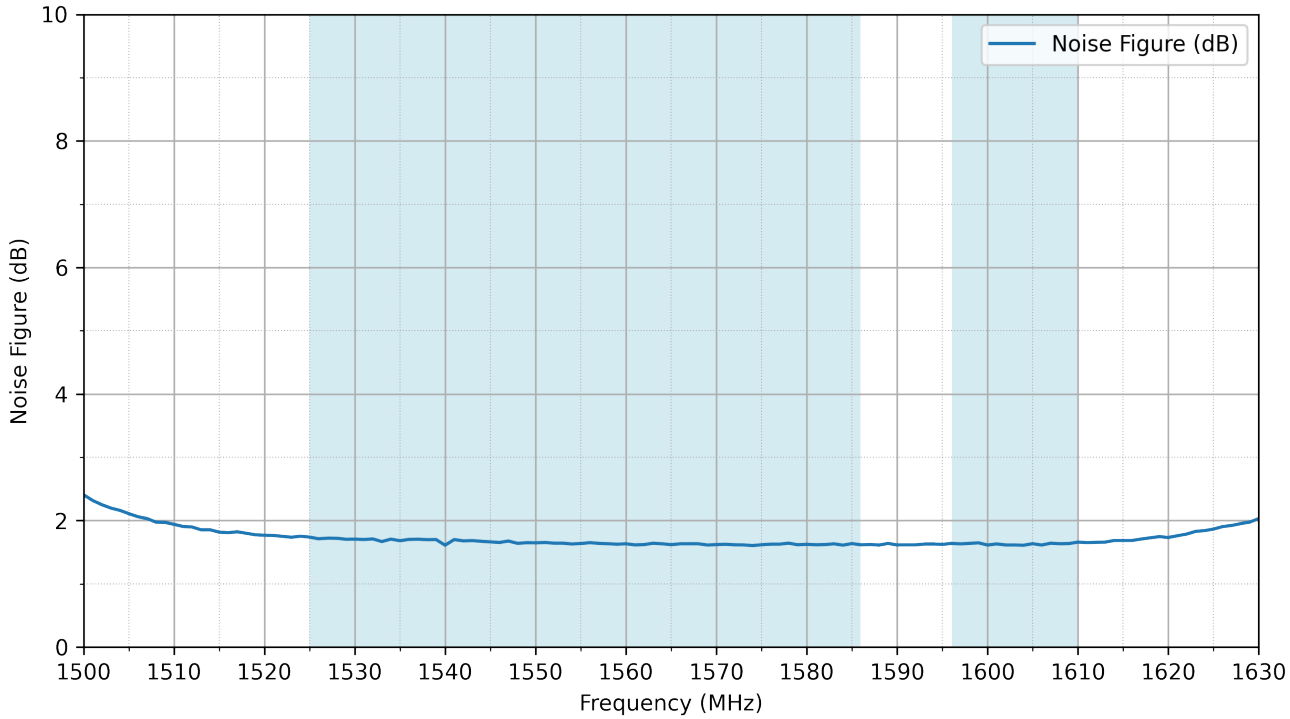

5.7 Group Delay (Low-Band)

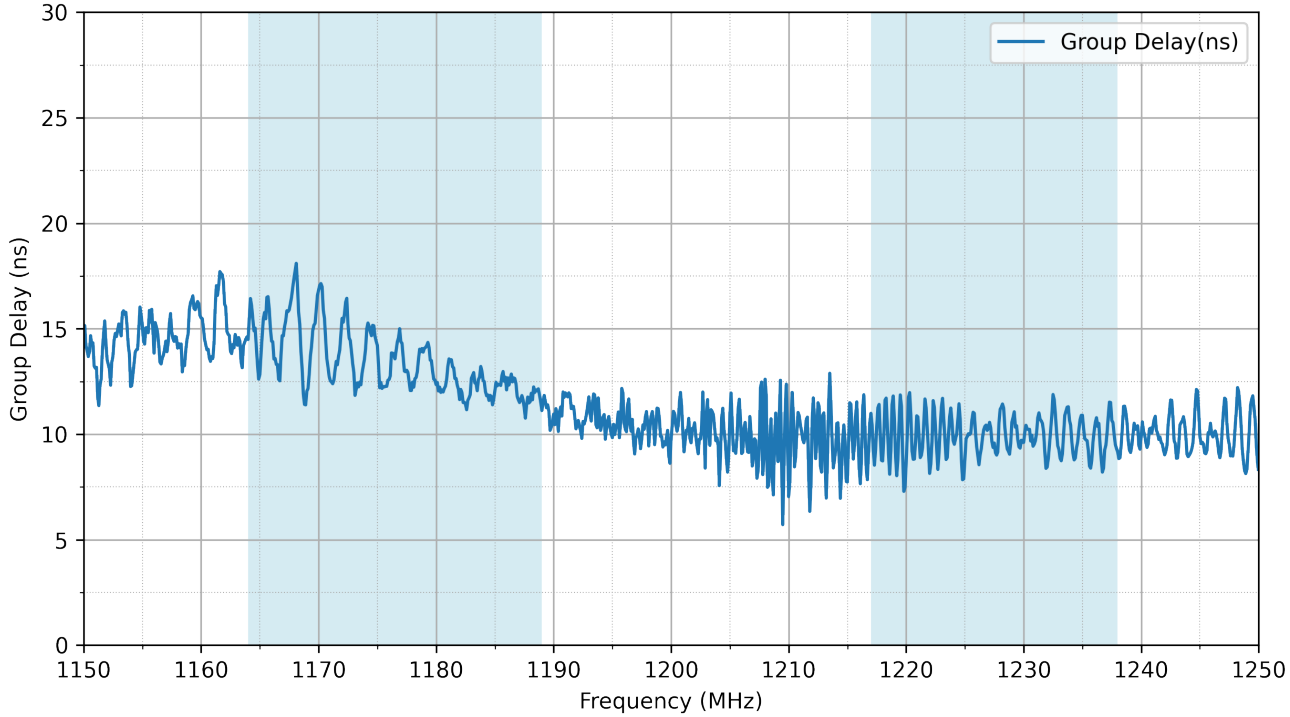

5.8 Group Delay (High-Band)

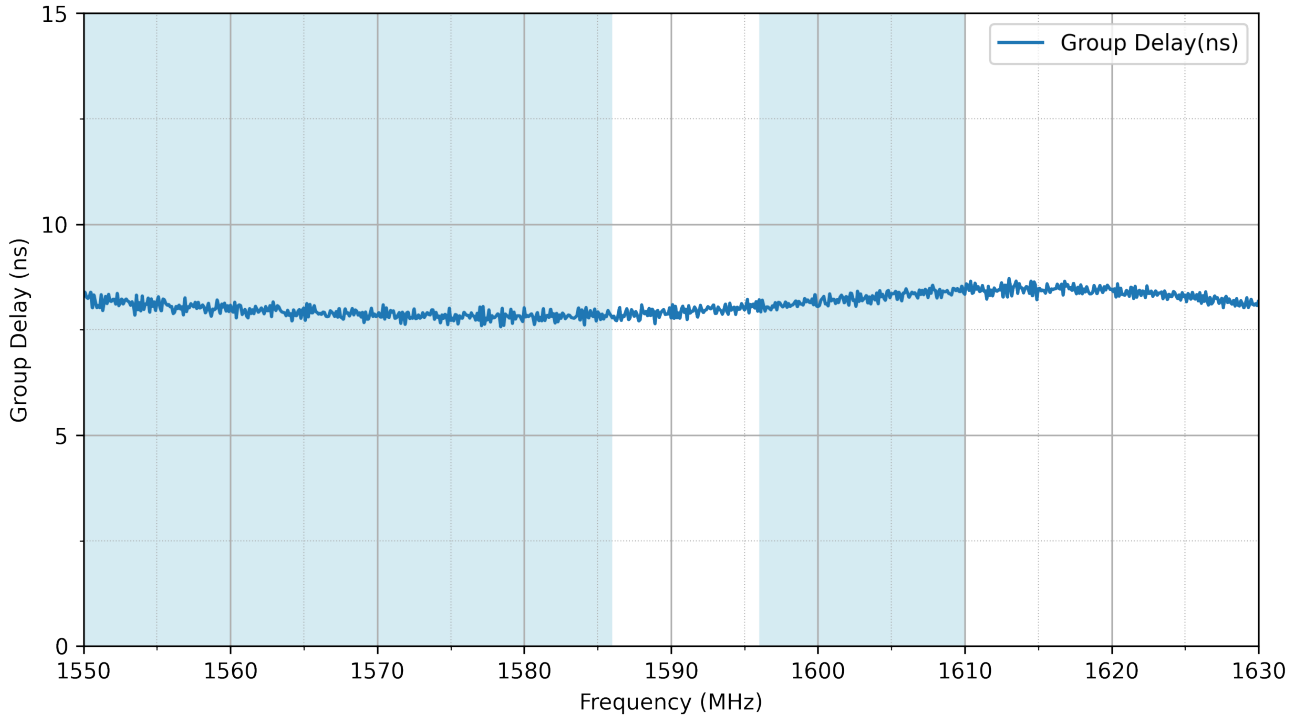

6. Field Test Results

In this section Taoglas will present the field test result for A.120 antenna. The test was performed when the antenna was mounted on a static rooftop test set up in an open sky environment for at least 6 hours.

Taoglas will show the field test results using the following receiver:

6.1 Septentrio AsteRx-U S/N

Receiver features:

- Multi-band GNSS: 544 channels
- GPS: L1, L2, L5 GLONASS: L1, L2, L3 Galileo: E1, E5ab, AltBoc, E6 BeiDou: B1, B2, B3 NavIC: L51 QZSS: L1, L2, L5, L6
- SBAS: EGNOS, WAAS, GAGAN, MSAS, SDCM(L1, L5)
- RTK (base and rover), Integrated dual-channel L-band receiver, Support for PPP
- Nav. update rate up to 100 Hz
- Position accuracy = RTK 0.6 cm + 0.5 ppm

Positioning Accuracy Table (2D Accuracy)					
Test Condition	**Correction Service**	**CEP (50%)**	**DRMS (68%)**	**2DRMS (95-98.2%)**	**TTFF (sec)**
Free Space	PPP-RTK DISABLED	28.44 cm	34.22 cm	68.44 cm	42s
	PPP-RTK ENABLED	3.55 cm	4.38 cm	8.76 cm	43s
30x30 cm Ground Plane	PPP-RTK DISABLED	32.08 cm	38.83 cm	77.63 cm	52s
	PPP-RTK ENABLED	5.39 cm	6.58 cm	13.16 cm	46s

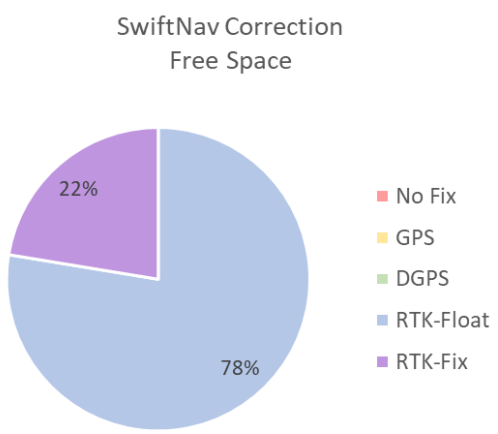

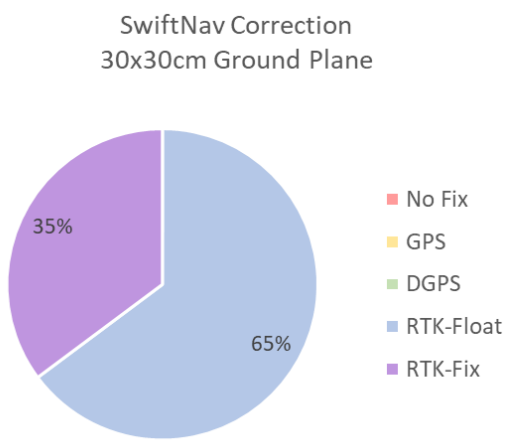

6.2 U-blox - ZED-X20P

Receiver features:

- Multi-band GNSS: 672 channels
- GPS L1C/A, L2C, L5
- GALILEO E1B/C, E5a, E6
- BEIDOU B1I, B1C, B2a, B3I
- QZSS L1C/A, L1C/B, L2C, L5, L6
- NavIC L1, L5
- SBAS L1C/A RTK (base and rover), Integrated dual-channel L-band receiver, Support for PPP
- Nav. update rate up to 25 Hz
- Position accuracy = RTK 0.01 m + 1 ppm CEP

Positioning Accuracy Table (2D Accuracy)					
Test Condition	**Correction Service**	**CEP (50%)**	**DRMS (68%)**	**2DRMS (95-98.2%)**	**TTFF (sec)**
Free Space	PPP-RTK DISABLED	21.66	52.34	104.68	19
	PPP-RTK ENABLED	3.05	8.65	17.29	12
30x30 cm Ground Plane	PPP-RTK DISABLED	18.24	47.3	94.6	14
	PPP-RTK ENABLED	3.61	8.28	16.56	17

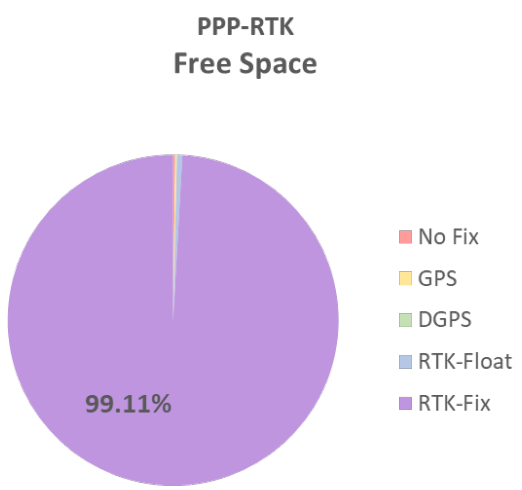

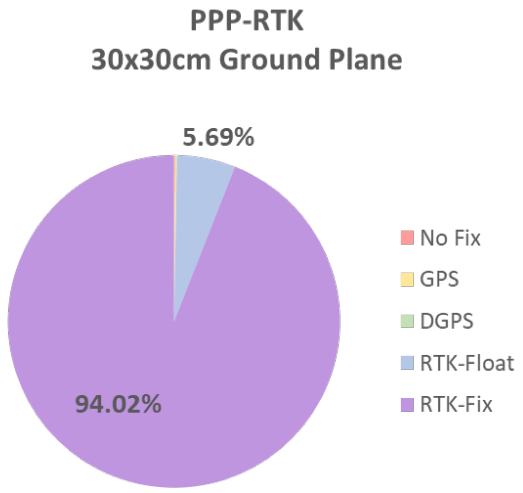

7. Mechanical Drawing

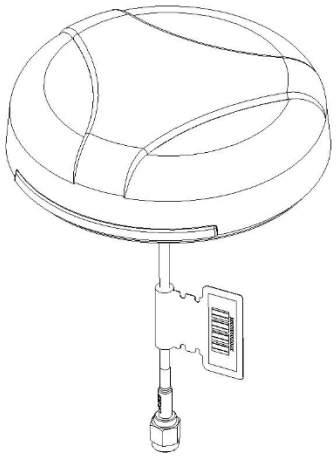

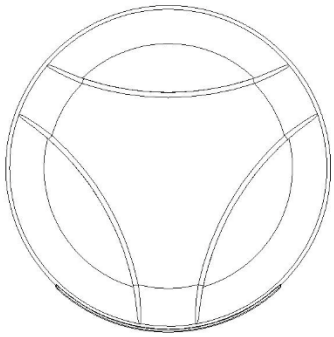

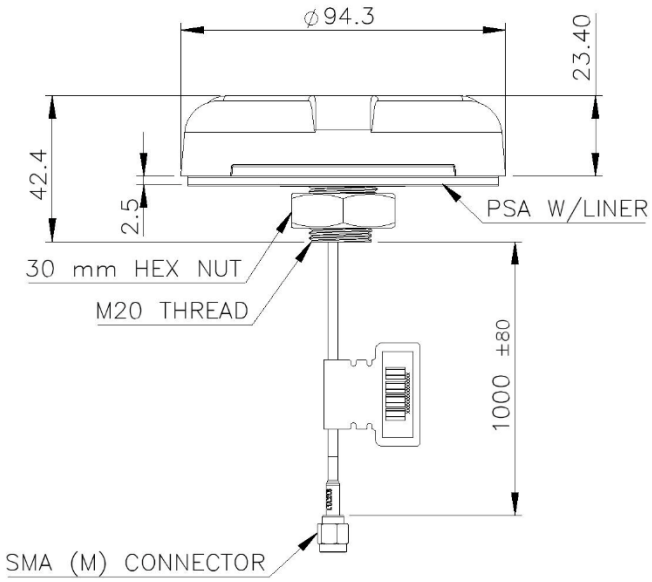

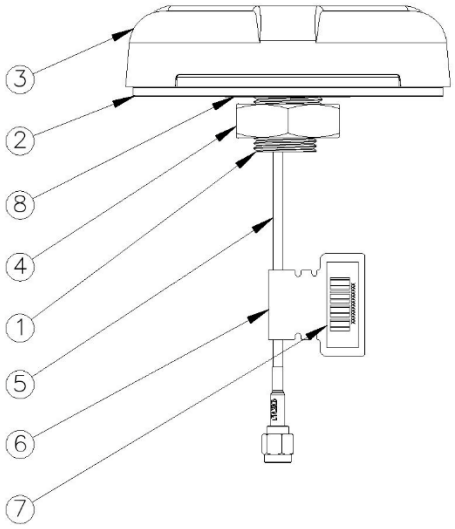

	Name	Material	Finish	QTY.
1	Mini ST Base	Zinc Alloy	Ni Plated	1
2	Adhesive Foam	3M 9448HK+CR4305	Black	1
3	Antenna Top Housing	ASA	Black	1
4	Nut M20X 1.5 X 9.5H Cut	SAE 1010	Ni-Zn Plated	1
5	Cable Assy RG-174 with SMA (M) Connector	NA	NA	1
6	Label (48*30)	PEPA	White	1
7	Barcode Label	PET	White	1
8	Washer OD 36.5 x ID 21.3 Cut	Steel	Ni-Zn Plated	1

8. Packaging

A.120.A.101111 Per PE Bag
Bag Dimensions – 232*183mm
Total Weight – 283.5g

50 pc Per Carton In Bulk Packaging
Carton Dimensions – 600*340*245mm
Weight – 13Kg

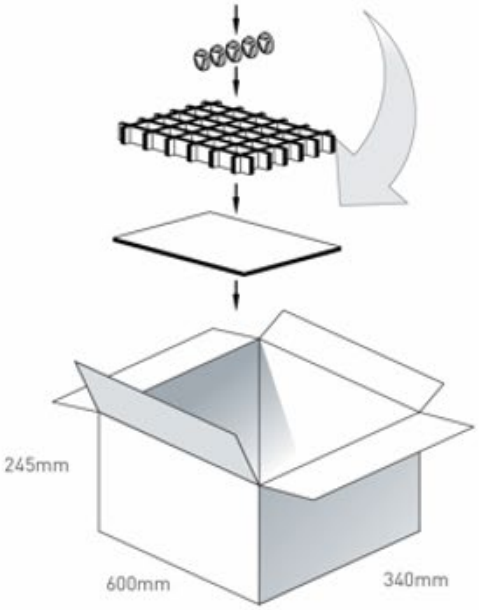

Pallet Dimensions 1200*1000*1420mm
20 Cartons Per Pallet
4 Cartons Per Layer
5 Layers

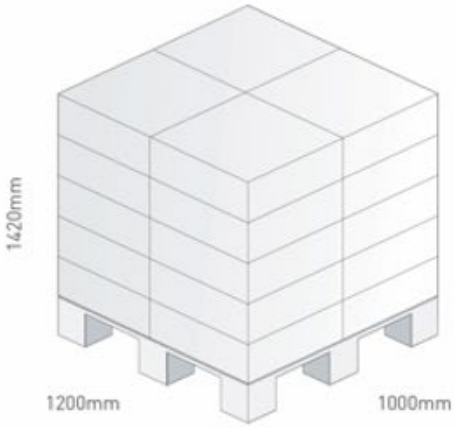

Changelog for the datasheet

SPE-23-8-242 – A.120.A.101111

Revision: D (Current Version)	
Date:	2026-06-25
Notes:	Added info re which embedded patches are used in this product in the intro.
Author:	Conor McGrath

Previous Revisions

Revision: C	
Date:	2025-05-14
Notes:	Added U-Blox ZED-X20P Field Testing Results.
Author:	Gary West

Revision: B	
Date:	2024-07-18
Notes:	Added Voltage Range and Current Draw
Author:	Gary West

Revision: A (Original First Release)	
Date:	2023-08-29
Notes:	Initial Release
Author:	Gary West

TAOGLAS

TAOGLAS®

www.taoglas.com