A02ES-H series

High-security emergency stop switches • panel cut-out Ø 22 mm

DISTINCTIVE FEATURES

Built-in safety

Approved to EN 60947-5-5, UL 508 and CSA C22.2 No 14-10

Pull or twist to release

AC-12, 3 A 250 VAC / DC-12, 2 A 30 VDC

Panel sealed to IP65

The A02ES-H series has been designed to ensure the highest security level. By design, this product has a failsafe modular construction. Many other emergency stop switches are not failsafe and rely on butt action contacts: the NC contats remain closed until the actuator is pressed. Therefore, if the switch is damaged, destroyed or assembled incorrectly, the contacts remain closed.

On the A02ES-H, if the operator or switch block become separated, the circuit will open.

ELECTRICAL SPECIFICATIONS

- Electrical function : push to shut off, pull or twist to release
- Current/voltage rating - NC contacts :
  AC-12, 3 A 250 VAC
  AC-15, 1.5 A 250 VAC
  DC-12, 2 A 30 VDC
  DC-13, 1 A 30 VDC
- Current/voltage rating - NO contacts :
  AC12, 0.6 A 250 VAC
  AC14, 0.3 A 250 VAC
  DC12, 2 A 30 V / 1 A 30 VDC
- Electrical life : 100,000 cycles
- Insulation resistance : 100 MΩ min.
- Dielectric strength : contact block 2,500 Vrms
- Contacts : gold plated silver

ENVIRONMENTAL SPECIFICATIONS

- Front panel sealing : IP65
- Terminals IP20 (finger safe)
- Operating temperature : -25 °C to +60 °C (-13 °F to +140 °F)
- Storage temperature : -45 °C to +80 °C (-49 °F to +176 °F)

The company reserves the right to change specifications without notice. Not for sale in Japan.

A02ES-H series

High-security emergency stop switches • panel cut-out Ø 22 mm

GENERAL SPECIFICATIONS

- Panel thickness : 6 mm (.236) max.
- Low level or mechanical life : 250,000 cycles
- Recommended torque : 2 Nm
- Switch terminals : M3 screws

OPERATING FORCE

- Push to shut off : 32 N
- Pull to release : 21 N
- Turn to release : 0.27 Nm
- Minimum force to direct opening action : 80 N

AGENCY APPROVALS

UL 508
CSA 22.2 No 14-10

EN 60947-5-5

ABOUT THIS SERIES

- **Mounting accessories** :
  standard hardware supplied : 1 nut and 1 flat panel seal

PANEL CUT-OUT

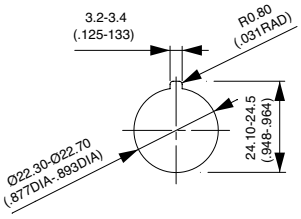

ELECTRICAL FUNCTIONS

Double pole
Normally closed

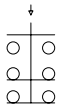

Double pole NC
+ single pole NO

A02ES-H series

High-security emergency stop switches • panel cut-out Ø 22 mm

DOUBLE POLE, NORMALLY CLOSED

A02ESH3B102IX0

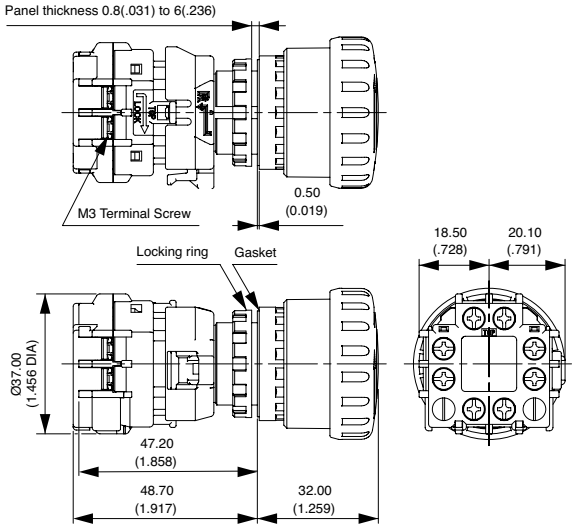

DOUBLE POLE, NORMALLY CLOSED + SINGLE POLE, NORMALLY OPEN

A02ESH3B112IX0

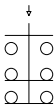

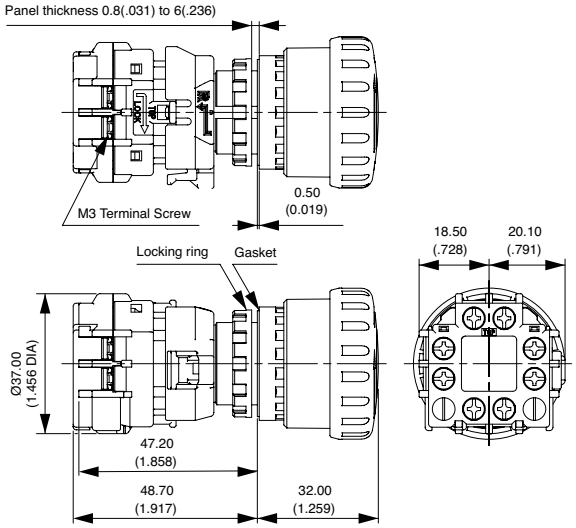

ACCESSORIES

Order separately.

Ø 60 MM NAME PLATE

A02-U27Y

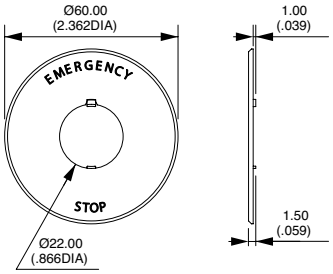

Legend "EMERGENCY STOP" is indicated outside a Ø 44 mm circle.

A02ES-H series

High-security emergency stop switches •
panel cut-out Ø 22 mm

ACCESSORIES
(CONTINUED)

Order separately.

ANTI-ROTATION RING

A02-U9ZRL

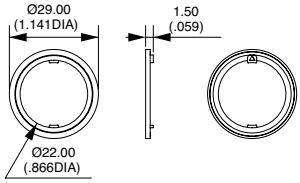

LOCKING RING WRENCH
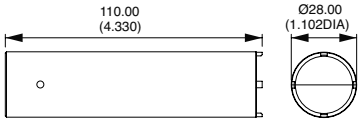
A02-U9ZT1