A1 series

Pushbutton switches & indicators

Distinctive features and specifications

A1_AX1609US

- ❑ Panel Sealed to IP65
- ❑ Single pole to four pole changeover
- ❑ Custom chemically etched actuator
- ❑ Push on tab terminals
- ❑ 6A 250VAC

ELECTRICAL SPECIFICATIONS

- **Current/Voltage Rating :** 10mA 5VAC min, 6A 250VAC, 6A 12VDC
- **Initial Contact Resistance :** 10mΩ max at 1A 4VDC
- **Insulation Resistance :** 50MΩ min
- **Dielectric Strength :** 750V between open contacts, 5KV live to accessible
- **Electrical Life :** 50,000 cycles min
- **Contact Gap :** >1mm (0.039)
- **Insulation :** Class 2
- **Lamp Life :** LED, 60,000 hours to 75% relative luminosity filament, approx. 5000 hours neon, approx. 10,000 hours

PANEL CUT OUT

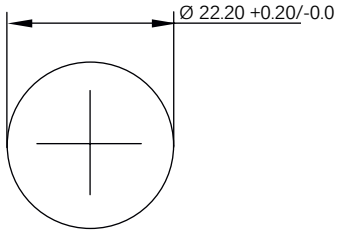

MECHANICAL SPECIFICATIONS

- **Mechanical Life (operator):** Momentary, 1 million cycles, maintained 100,000 cycles
- **Lamp :** Midget grove T1 ¾ filament, neon or LED
- **Terminals :** Solder/quick connect 2.8mm (0.110)

GENERAL SPECIFICATIONS

- **Operating Temperature :** -20°C to +55°C
- **Solder Heat resistance :** 350°C for 5 seconds
- **Sealing :** Panel sealed to IP65, rear of panel IP40

AGENCY APPROVALS

MATERIALS

- **Screens :** Anodised aluminium
- **Reflector Assembly :** Polycarbonate
- **Operator :** PBT
- **Bezel :** Anodised aluminium
- **Nut :** ABS
- **Camtrack Momentary :** PPE
- **Camtrack Maintained :** PPSU
- **Switch Block 1 & 2 Pole :** PBT
- **Switch Block 3 & 4 Pole :** PEI
- **Contacts :** Gold plated silver

Dimensions : first dimensions are in mm while inches are shown in brackets.
Refer to the following pages for further information.

Mounting accessories : standard hardware 1 nut and 1 sealing washer.

The company reserves the right to change specifications without notice.

A1 series

Pushbutton switches & indicators

Panel cut-out Ø22 (0.866)

Pushbutton

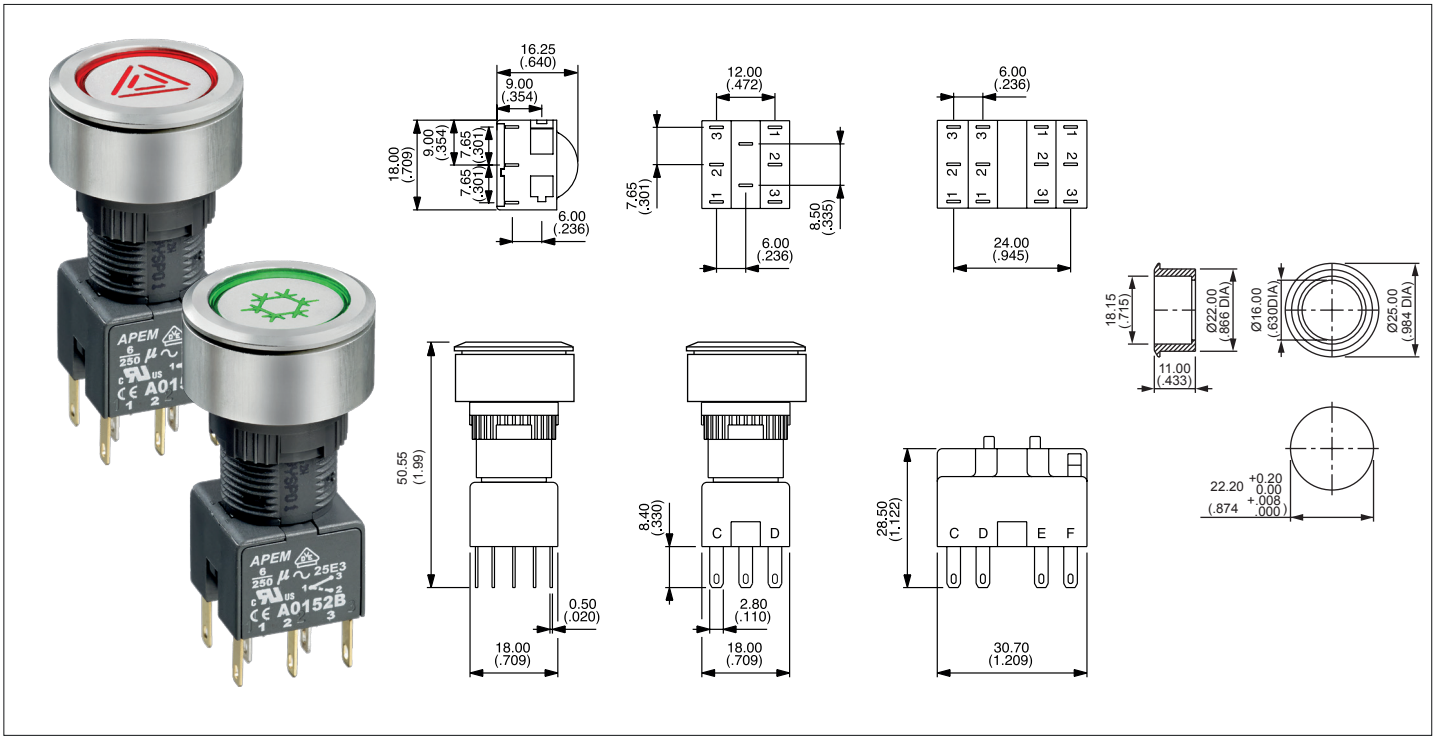

Indicator

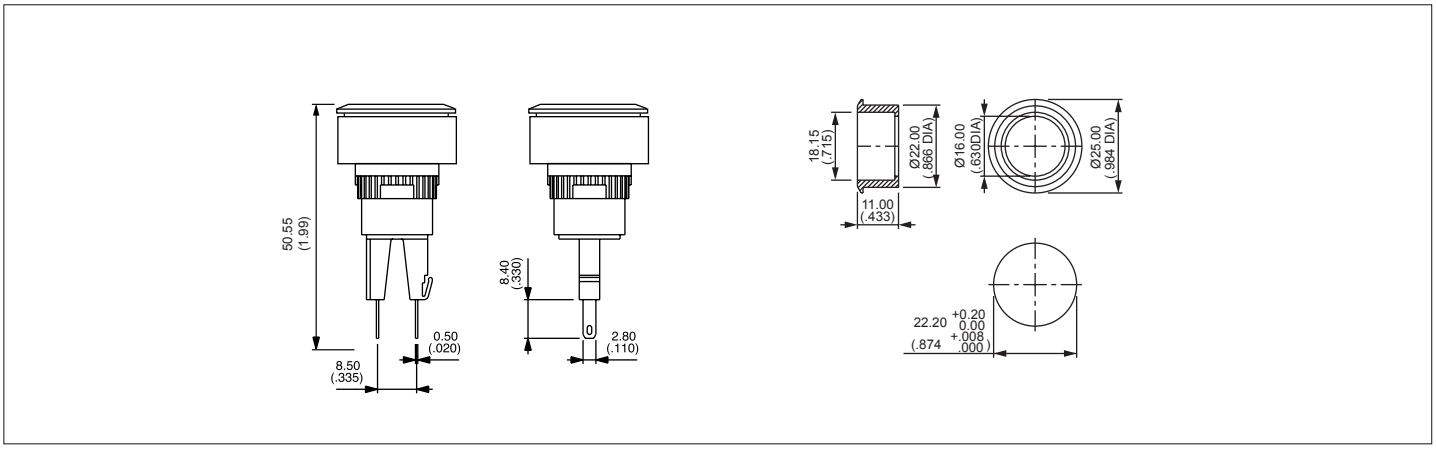

A1 series

Pushbutton switches & indicators

Overview

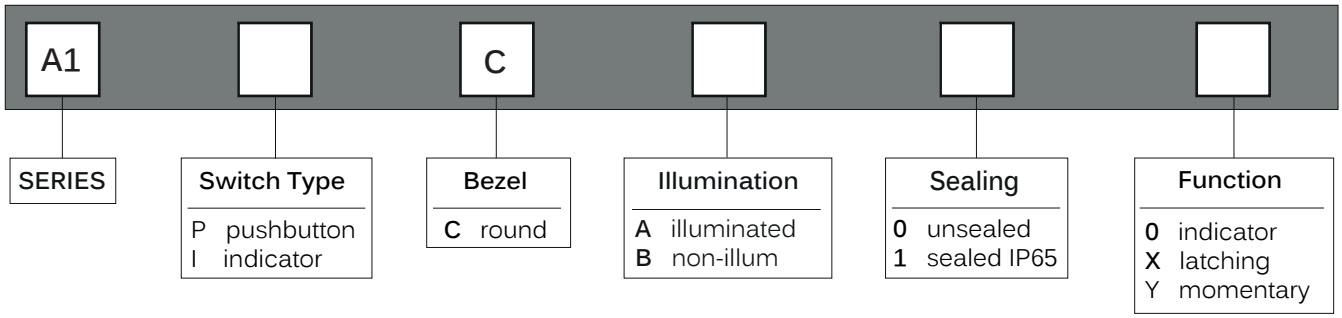

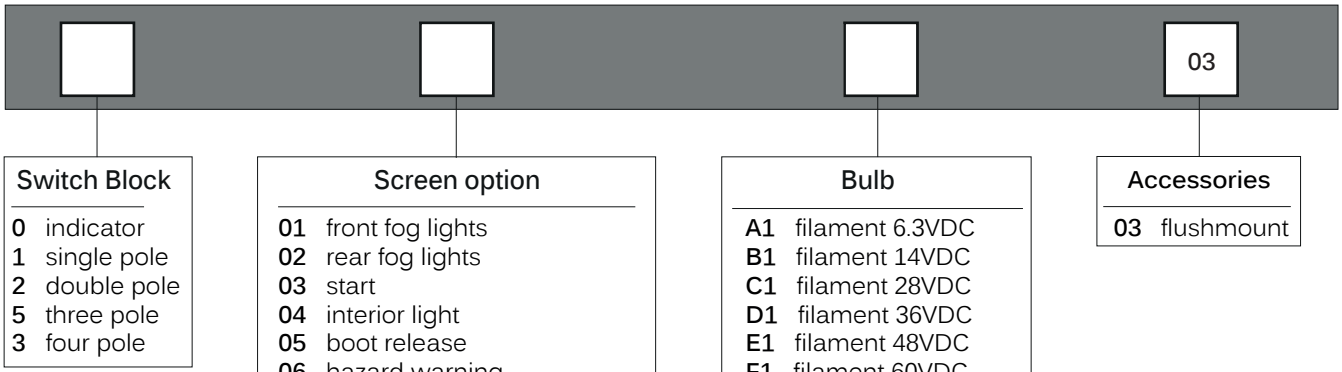

PCB Sockets

Number of Poles	Part No.
Single pole, non illuminated :	A01PC1
Double pole, non illuminated :	A01PC2
Single pole, illuminated :	A01PC3
Double pole, illuminated :	A01PC4
Indicator :	A01PC5

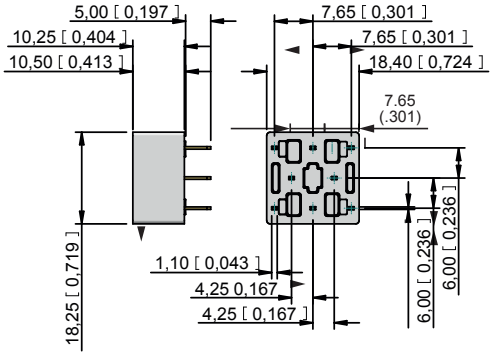

Terminal guards

Two way

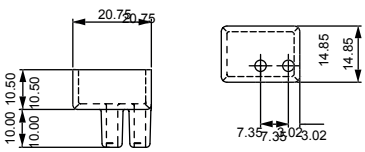

Part number A01RTC2

Eight way

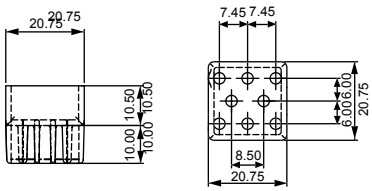

Part number A01RTC8

Tools

Nut fixing key

30-0001

Bulb remover

30-0002