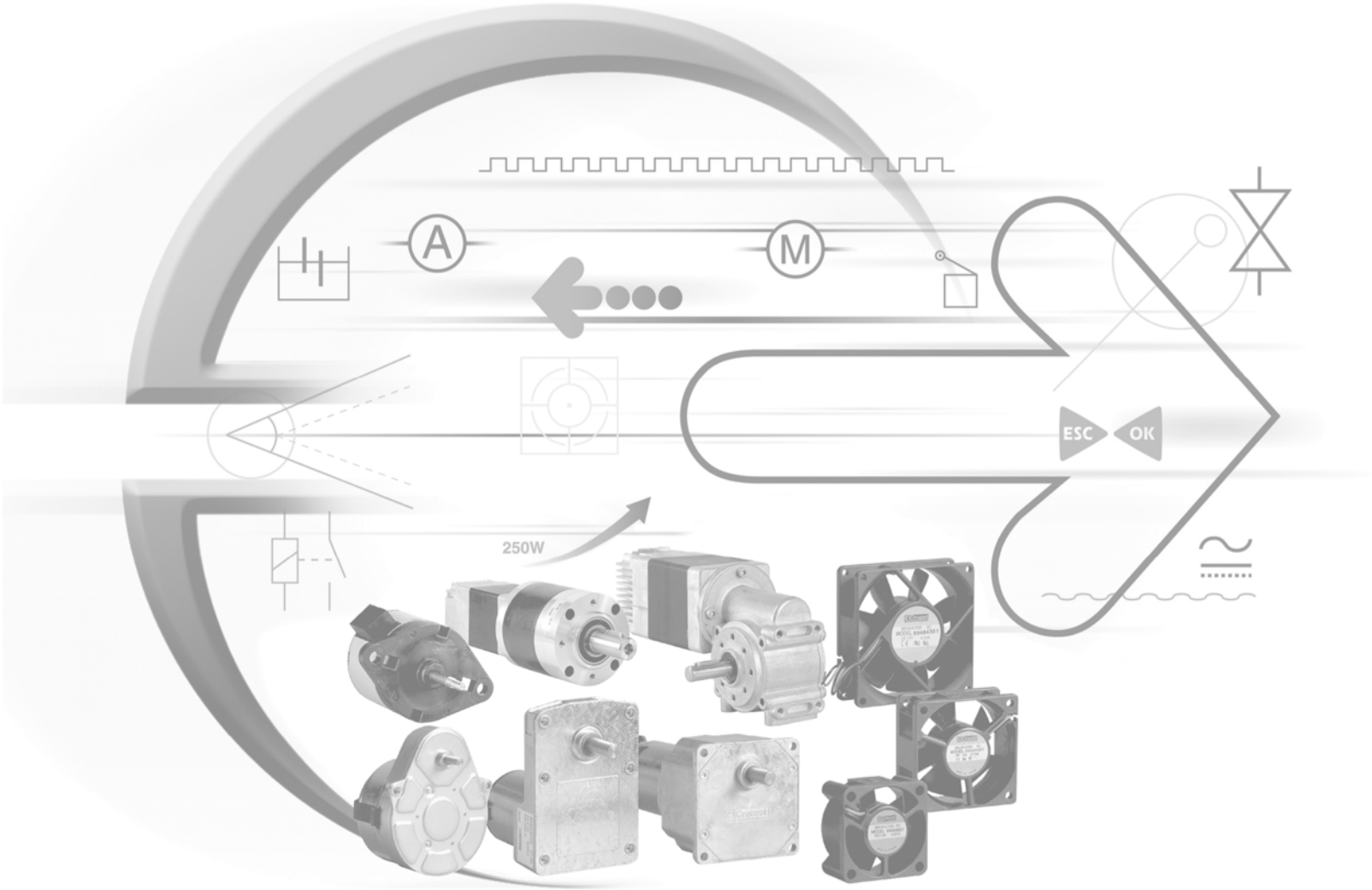

Fans

4

Products and specifications subject to change without notice.

General characteristics

Noise data

Acoustic measurements made at a distance of 1.0 metre from the surface of the fan (inner side) and 45˚ radially off the fan axis.

Air flow performance data

The performance data were determined in accordance with AMCA standard 210-74 on a double chamber test set up with measurement on the suction side.

Overload

All Crouzet fans have integrated protection against locked rotor condition to avoid damage to windings and electronic components. Restarting is automatic as soon as any constraints on running have been removed.

Bearing systems

All Crouzet fans have specially designed and precision lubricated sleeve bearings for long, maintenance-free performance at low noise level. Ball bearing on request.

Safety

All fans are designed and manufactured in conformance with the requirements of UL, CSA and VDE.

Life

AC fans

Bearings sleeve

⌀ 120 x 38 mm	100 000 hours at 25 ˚C 25 000 hours at 55 ˚C 10 000 hours at 70 ˚C
⌀ 92 x 25 mm 80 x 38 mm 80 x 25 mm	80 000 hours at 25 ˚C 20 000 hours at 55 ˚C 10 000 hours at 70 ˚C

AC fans

Ball bearings

⌀ 120 x 38 mm	100 000 hours at 25 ˚C 25 000 hours at 55 ˚C 10 000 hours at 70 ˚C
⌀ 92 x 25 mm 80 x 38 mm 80 x 25 mm	80 000 hours at 25 ˚C 25 000 hours at 55 ˚C 10 000 hours at 80 ˚C

DC fans

Bearings sleeve

⌀ 120 x 38 mm 92 x 25 mm 80 x 25 mm	100 000 hours at 25 ˚C 80 000 hours at 25 ˚C 80 000 hours at 25 ˚C
⌀ 60 x 25 mm	65 000 hours at 25 ˚C 30 000 hours at 55 ˚C 20 000 hours at 65 ˚C

Operating temperature

AC : -10 ˚C at + 70 ˚C
DC : 0 ˚C at + 70 ˚C

Storage temperature

AC : -30 ˚C at + 75 ˚C
DC : -30 ˚C at + 75 ˚C

Operating voltage

AC : 115 V : 85 V - 125 V
220 V : 185 V - 245 V

DC : 12 V : 10.2 V - 13.8 V
24 V : 20.4 V - 27.6 V

Dielectric strength

AC : 1500 V ∼ for one minute
DC : 600 V ∼ for 2 seconds

Insulation resistance

AC : 500 V ⎓ 100 M
DC : 250 V ⎓ 10 M

Flow conversion table

	CFM	m³/h	m³/min	l/min	l/s
1 CFM	1	1.7	0.028	28.3	0.47
1 m³/h	0.588	1	0.017	16.67	0.28
1 m³/min	35.28	60	1	1000	16.67
1 l/min	0.035	0.06	0.001	1	0.017
1 l/s	2.12	3.6	0.06	60	1

The new KDE range
Self-commutated DC fans

The range of DC fans have the advantage of a new, patented design referred to as "single winding".

This new range, the KDE range, forms a useful replacement for the MD range and provides the following improvements:

- higher air flow thanks to smaller motor diameter,
- quieter (gain of at least 2 dB),
- longer life,
- greater dielectric strength.

The new range offers upward compatibility (1) with the MD range (see table below) and allows us to offer fans even more compact than the 0 x 0, 0 x 0, 0 x 0, and 0 x 0 models.

(1) Current consumption should be checked however, as it may be higher in some cases.

Old part no	New part no
⌀ 60	
99 486 177	99 484 401
99 486 179	99 484 403
99 486 179	99 484 404
⌀ 80	
99 486 277	99 484 301
99 486 279	99 484 303
99 486 287	99 484 304
99 489 287	99 484 354
99 486 289	99 484 306
⌀ 92	
99 486 377	99 484 201
99 489 377	99 484 251
99 486 379	99 484 203
99 486 387	99 484 204
99 486 389	99 484 206

Old part no	New part no
⌀ 120	
99 487 477	99 484 001
99 487 478	99 484 003
99 487 479	99 484 004
99 487 487	99 484 005
99 487 488	99 484 007
99 487 489	99 484 008
99 487 377	99 484 101
99 487 378	99 484 102
99 487 379	99 484 103
99 487 387	99 484 104
99 487 388	99 484 105
99 487 389	99 484 106

Brushless DC Axial Fans

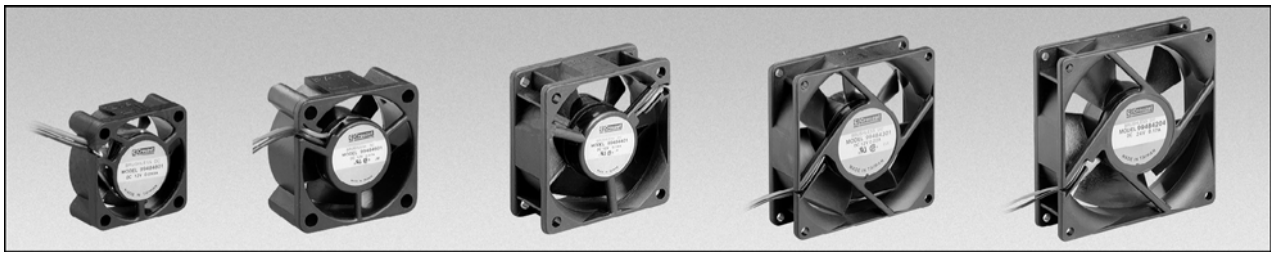

General Specifications

Material:
Body PBT UL 94V-0
Fan PBT UL 94V-0

Insulation Class E

Approvals UL, cUL Recognized E118509

Box Count:
120 x 38 40 pieces
120 x 25 40 pieces
92 x 25 50 pieces
80 x 25 50 pieces
60 x 25 100 pieces
60 x 15 200 pieces
40 x 20 200 pieces
40 x 10 400 pieces
25 x 10 500 pieces

Part Number	Voltage (V)	Current (A)	Speed (RPM)	Power (W)	Airflow (CFM)	Max. Air Pressure (Inch-H2O)	Noise (dBA)	Weight (g)	Bearing Type
120 x 120 x 38mm (4 3/4 x 1 1/2")									
99484002	12	0.59	3000	7	105	0.31	45.0	323	Sleeve
99484004	12	0.27	2300	3.2	83	0.18	36.0	323	Sleeve
99484006	24	0.25	3000	6	105	0.31	45.0	323	Sleeve
99484051	12	0.65	3150	7.8	120	0.34	48.0	323	Ball
99484052	12	0.59	3100	7	106	0.32	46.5	323	Ball
99484053	12	0.42	2850	5	93	0.23	42.0	323	Ball
99484055	24	0.33	3150	7.9	120	0.34	48.0	323	Ball
99484056	24	0.25	3100	6	106	0.31	46.5	323	Ball
99484057	24	0.23	2850	5.5	93	0.23	42.0	323	Ball
120 x 120 x 25mm (4 3/4 x 1")									
99484101	12	0.42	3000	5	84	0.25	44.0	250	Sleeve
99484102	12	0.26	2700	3.1	77	0.20	40.0	250	Sleeve
99484104	24	0.25	3000	6	84	0.25	44.0	250	Sleeve
99484105	24	0.22	2700	5.3	77	0.20	40.0	250	Sleeve
99484106	24	0.17	2300	4.1	65	0.16	35.0	250	Sleeve
99484151	12	0.42	3100	5	85	0.26	44.5	250	Ball
99484152	12	0.26	2800	3.1	78	0.21	41.0	250	Ball
99484153	12	0.23	2400	2.8	66	0.17	35.5	250	Ball
99484154	24	0.25	3100	6	85	0.26	44.5	250	Ball
99484155	24	0.22	2800	5.3	78	0.21	41.0	250	Ball
99484156	24	0.17	2400	4.1	66	0.17	35.5	250	Ball
92 x 92 x 25mm (3 9/16 x 1")									
99484201	12	0.22	3200	2.6	50	0.19	33.0	135	Sleeve
99484202	12	0.16	2700	2	44	0.17	27.0	135	Sleeve
99484203	12	0.12	2400	1.4	42	0.15	25.5	135	Sleeve
99484204	24	0.15	3200	3.6	50	0.19	33.0	135	Sleeve
99484205	24	0.12	2700	2.2	44	0.17	27.0	135	Sleeve
99484206	24	0.10	2400	1.7	42	0.15	25.5	135	Sleeve
99484251	12	0.22	3400	2.6	51	0.19	34.0	135	Ball
99484252	12	0.16	2800	2	45	0.17	28.0	135	Ball
99484253	12	0.12	2500	1.4	42.5	0.15	26.0	135	Ball
99484254	24	0.22	3400	3.6	51	0.19	34.0	135	Ball
99484256	24	0.12	2500	1.7	42.5	0.15	26.0	135	Ball

Other Information	To Order, Specify:	
For dimensions and air flow performance see pages 150-151. All DC fans are supplied with Lead wires only.	**99484002**	Standard, normally stocked products
	99484003	Products produced to order - minimum quantities may apply

Products and specifications subject to change without notice.

Brushless DC Axial Fans

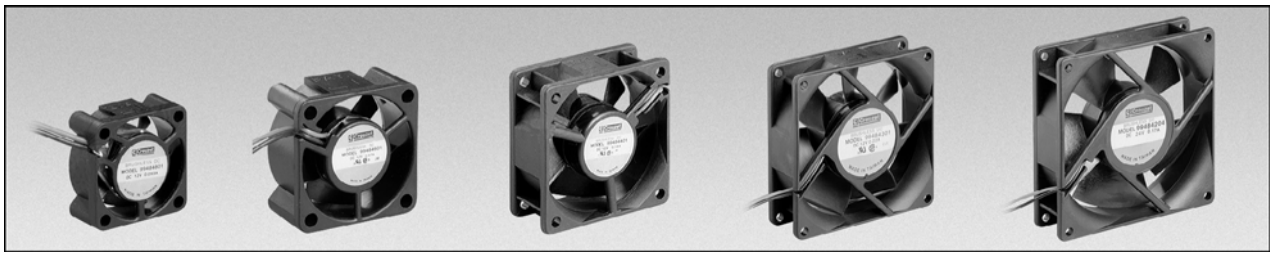

General Specifications

Material:

Body	PBT UL 94V-0
Fan	PBT UL 94V-0
Insulation	Class E
Approvals	UL, cUL Recognized E118509

Box Count:

120 x 38	40 pieces
120 x 25	40 pieces
92 x 25	50 pieces
80 x 25	50 pieces
60 x 25	100 pieces
60 x 15	200 pieces
40 x 20	200 pieces
40 x 10	400 pieces
25 x 10	500 pieces

Part Number	Voltage (V)	Current (A)	Speed (RPM)	Power (W)	Airflow (CFM)	Max. Air Pressure (Inch-H2O)	Noise (dBA)	Weight (g)	Bearing Type
80 x 80 x 25mm (3 1/8 x 1 1/2)									
99484301	12	0.22	3000	2.6	41.7	0.19	33.0	120	Sleeve
99484303	12	0.12	2200	1.4	29.4	0.15	24.5	120	Sleeve
99484304	24	0.15	3000	3.6	41.7	0.19	33.0	120	Sleeve
99484305	24	0.12	2650	2.9	34.4	0.17	28.0	120	Sleeve
99484306	24	0.10	2200	2.4	29.4	0.15	24.5	120	Sleeve
99484351	12	0.22	3200	2.6	42.5	0.23	33.5	120	Ball
99484353	12	0.12	2500	1.4	30	0.14	25.0	120	Ball
99484354	24	0.22	3100	2.6	38	0.23	33.5	120	Ball
99484356	24	0.12	2350	1.4	27	0.14	25.0	120	Ball
60 x 60 x 25 (mm)									
99484401	12	0.19	4500	2.2	21.7	0.20	34.0	60	Sleeve
99484402	12	0.13	3800	1.6	17.6	0.14	31.0	60	Sleeve
99484403	12	0.09	3300	1.2	15.9	0.10	26.7	60	Sleeve
99484404	24	0.11	4500	2.6	21.7	0.20	34.0	60	Sleeve
99484406	24	0.06	3300	1.4	15.9	0.10	26.7	60	Sleeve
99484451	12	0.19	4700	2.2	22.1	0.22	34.3	60	Ball
99484454	24	0.11	4500	2.6	21.7	0.20	34.0	60	Ball
60 x 60 x 15 (mm)									
99484501	12	0.16	4000	1.9	17.8	0.14	31.0	45	Sleeve
99484502	12	0.09	3300	1.2	14.8	0.11	26.0	45	Sleeve
40 x 40 x 20 (mm)									
99484601	12	0.07	6000	0.9	6.5	0.12	25.5	35	Sleeve
99484602	12	0.50	4500	0.6	5.2	0.08	22.8	35	Sleeve
99484603	24	0.07	6500	1.6	7.8	0.16	29.0	35	Sleeve
99484604	24	0.05	6000	1.2	6.5	0.12	25.5	35	Sleeve
40 x 40 x 10 (mm)									
99484701	12	0.09	5500	1.1	5.8	0.11	25.0	15.3	Sleeve
99484751	12	0.09	6600	1.1	6.5	0.15	27.0	15.3	Ball
25 x 25 x 10 (mm)									
99484801	12	0.10	10000	1.1	1.5	0.10	23.0	7	Sleeve

Other Information	To Order, Specify:	
For dimensions and air flow performance see page 154. All DC fans are supplied with Lead wires only.	**99484002**	Standard, normally stocked products
	99484003	Products produced to order Ð minimum quantities may apply

Products and specifications subject to change without notice.

Brushless DC Axial Fans - Dimensions and Performance

Dimensions

⌀ 120 x 38
120 x 25

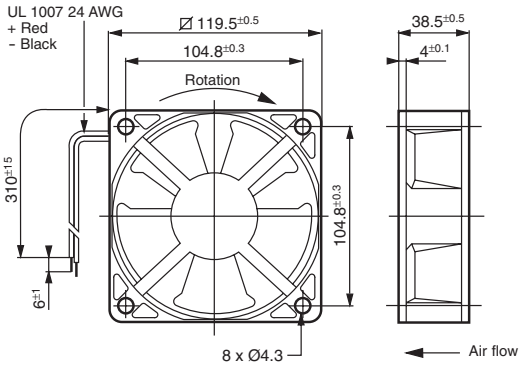

Air performance

99 484 002 - 99 484 006

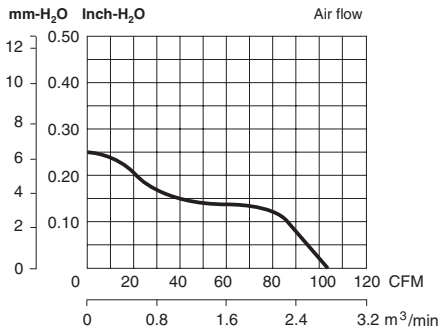

⌀ 92 x 25

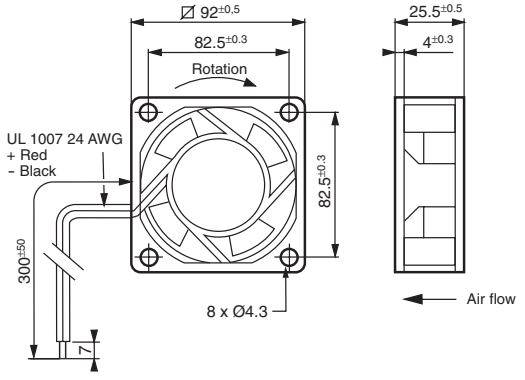

99 484 201 / 204 - 99 484 203 / 206

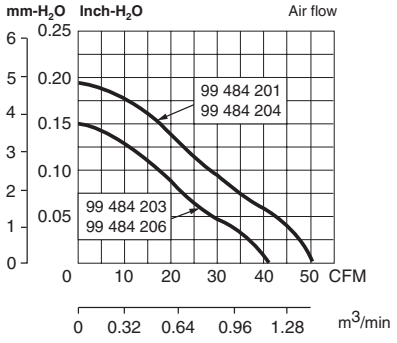

⌀ 80 x 25

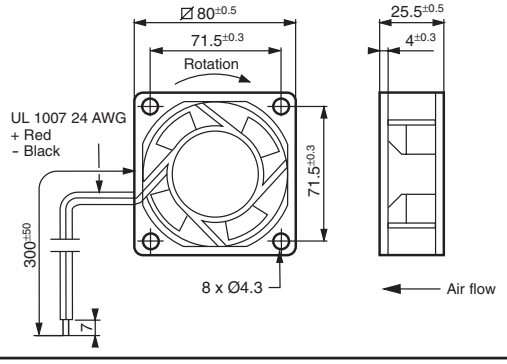

99 484 301 / 304 - 99 484 303 / 306

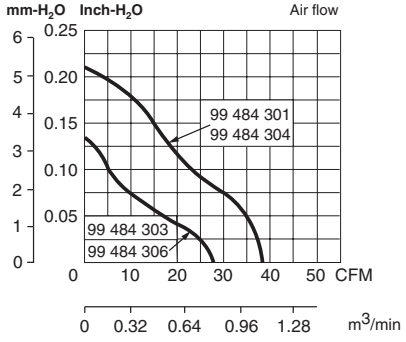

⌀ 60 x 25

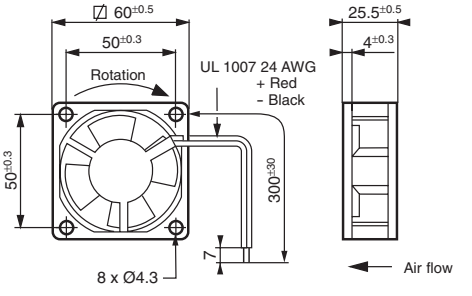

99 484 401 - 99 484 403

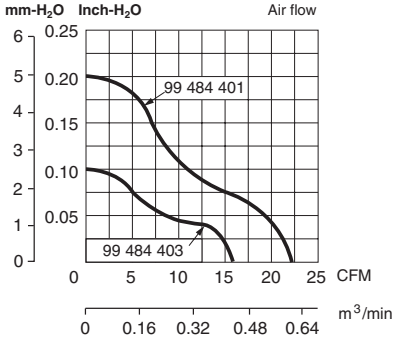

Products and specifications subject to change without notice.

Brushless DC Axial Fans - Dimensions and Performance

Dimensions

⌀ 60 x 15

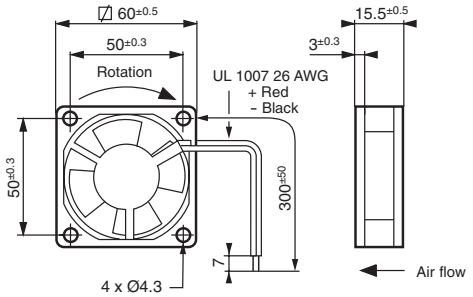

Air performance

99 484 501

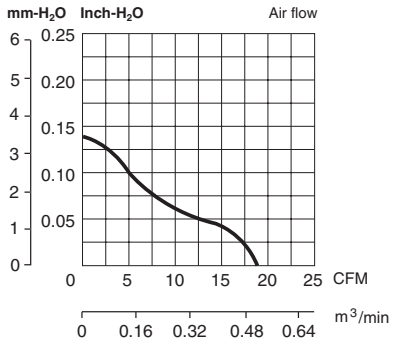

⌀ 40 x 20

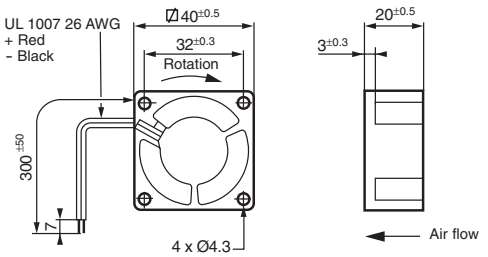

99 484 601

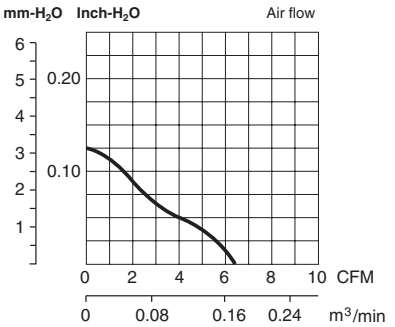

⌀ 40 x 10

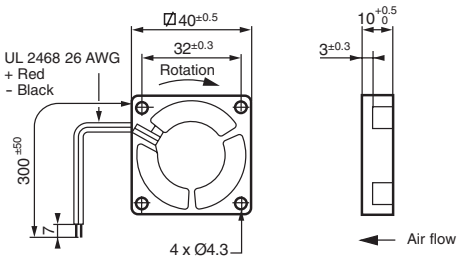

99 484 701

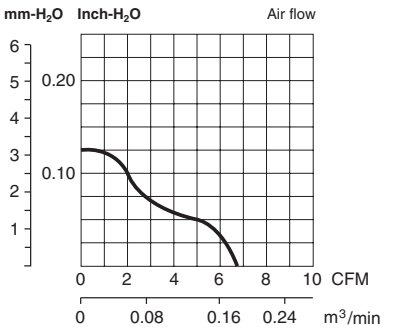

⌀ 25 x 10

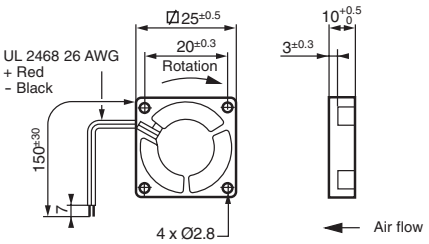

99 484 801

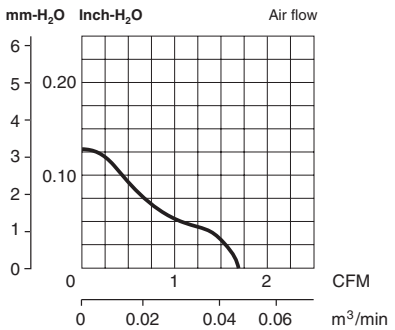

4

Products and specifications subject to change without notice.

AC Axial Fans

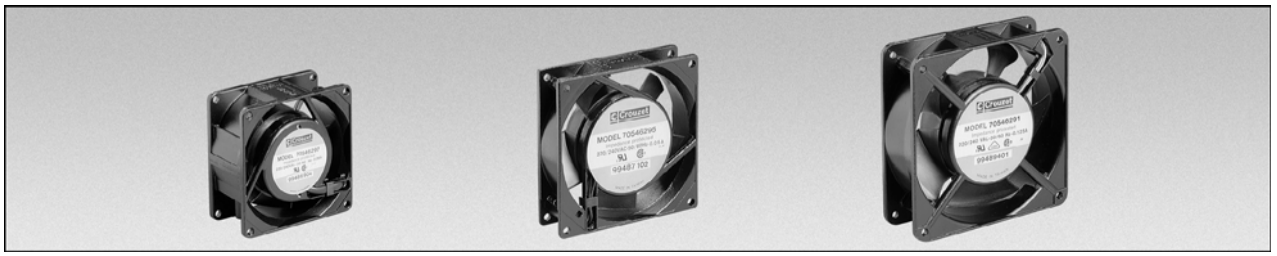

General Specifications

Material:

Body	Aluminum
Fan	PBT UL 94V-0
Insulation	Class B
Approvals	UL, cUL Recognized VDE pending E118509

Box Count:

172 x 51	12 pieces
120 x 38	40 pieces
120 x 25	40 pieces
92 x 25	50 pieces
80 x 38	50 pieces
80 x 25	50 pieces

Part Number	Voltage (V)	Frequency (Hz)	Current (A) [50/60 Hz]	Speed (RPM) [50/60 Hz]	Power (W) [50/60 Hz]	Airflow (CFM) [50/60 Hz]	Maximum Air Pressure (Inch-H2O) [50/60 Hz]	Noise (dBA) [50/60 Hz]	Weight (g)	Connection	Bearing Type
172 x 151 x 51mm (6 3/4 x 6 x 2")											
99489701	115	50/60	0.60/0.55	2800/3200	49/45	180/200	0.48/0.48	52/55	942	Terminals	Ball
99489702	220/240	50/60	0.25/0.22	2600/2800	39/35	178/192	0.38/0.44	52/54	942	Terminals	Ball
99489703	115	50/60	0.60/0.55	2650/2950	49/45	180/200	0.48/0.48	52/55	942	Leads	Ball
99489704	220/240	50/60	0.25/0.22	2600/2800	39/35	178/192	0.38/0.44	52/54	942	Leads	Ball
120 x 120 x 38mm (4 3/4 x 1 1/2")											
99487421	220/240	50/60	0.14/.012	2700/3100	22/21	95/115	0.33/0.38	44/49	550	Leads	Sleeve
99487420	220/240	50/60	0.14/.012	2700/3100	22/21	95/115	0.33/0.38	44/49	550	Terminals	Sleeve
99487400	220/240	50/60	0.13/0.11	2550/2900	20/19	85/105	0.25/0.30	43/48	550	Leads	Sleeve
99487401	220/240	50/60	0.13/0.11	2550/2900	20/19	85/105	0.25/0.30	43/48	550	Terminals	Sleeve
99487405	220/240	50/60	0.08/0.06	2000/2200	10/10	70/76	0.08/0.12	36/38	550	Leads	Sleeve
99487403	220/240	50/60	0.08/0.06	2000/2200	10/10	70/76	0.08/0.12	36/38	550	Terminals	Sleeve
99487410	115	50/60	0.12/0.18	2550/2900	20/18	85/105	0.25/0.30	43/48	550	Leads	Sleeve
99487411	115	50/60	0.12/0.18	2550/2900	20/18	85/105	0.25/0.30	43/48	550	Terminals	Sleeve
99487415	115	50/60	0.13/0.11	2000/2200	11/11	70/76	0.08/0.12	36/38	550	Leads	Sleeve
99487413	115	50/60	0.13/0.11	2000/2200	11/11	70/76	0.08/0.12	36/38	550	Terminals	Sleeve
99489421	220/240	50/60	0.14/0.12	2850/3150	22/21	97/117	0.34/0.39	45/50	550	Leads	Ball
99489420	220/240	50/60	0.14/0.12	2850/3150	22/21	97/117	0.34/0.39	45/50	550	Terminals	Ball
99489400	220/240	50/60	0.12/0.18	2750/3050	20/19	87/107	0.26/0.32	45/50	550	Leads	Ball
99489401	220/240	50/60	0.12/0.18	2750/3050	20/19	87/107	0.26/0.32	45/50	550	Terminals	Ball
99489405	220/240	50/60	0.08/0.06	2150/2300	10/10	72/78	0.09/0.13	37/39	550	Leads	Ball
99489403	220/240	50/60	0.08/0.06	2150/2300	10/10	72/78	0.09/0.13	37/39	550	Terminals	Ball
99489431	115	50/60	0.26/0.24	2850/3150	22/20	97/117	0.34/0.39	45/50	550	Leads	Ball
99489430	115	50/60	0.26/0.24	2850/3150	22/20	97/117	0.34/0.39	45/50	550	Terminals	Ball
99489410	115	50/60	0.12/0.18	2750/3050	20/18	87/107	0.26/0.32	45/50	550	Leads	Ball
99489411	115	50/60	0.12/0.18	3750/3050	20/18	87/107	0.26/0.32	45/50	550	Terminals	Ball
99489415	115	50/60	0.13/0.11	2150/2300	11/11	72/78	0.09/0.13	37/39	550	Leads	Ball
99489413	115	50/60	0.13/0.11	2150/2300	11/11	72/78	0.09/0.13	37/39	550	Terminals	Ball
120 x 120 x 25mm (4 3/4 x 1")											
99489301	220/240	50/60	0.09/0.09	2150/2300	19/18	66/78	0.14/0.16	44/46	330	Terminals	Ball
92 x 92 x 25mm (3 9/16 x 1")											
99487104	220/240	50/60	0.07/0.06	2250/2750	14.5/14	29/36	0.12/0.18	36/39	280	Leads	Sleeve
99487102	220/240	50/60	0.07/0.06	2250/2750	14.5/14	29/36	0.12/0.18	36/39	280	Terminals	Sleeve
99487114	115	50/60	0.12/0.11	2250/2750	13/12	29/36	0.12/0.18	36/39	280	Leads	Sleeve
99487112	115	50/60	0.12/0.11	2250/2750	13/12	29/36	0.12/0.18	36/39	280	Terminals	Sleeve
99489102	220/240	50/60	0.07/0.06	2350/2850	14.5/14	30/37	0.13/0.19	37/40	280	Terminals	Ball

Other Information	To Order, Specify:
For dimensions and air flow performance see page 154.	99484002 Standard, normally stocked products
	99484003 Products produced to order - minimum quantities may apply

Products and specifications subject to change without notice.

Order/Technical Support - Tel: (800) 677-5311 / FAX: (800) 677-3865 / www.crouzet-usa.com

Crouzet

AC Axial Fans

General Specifications

Material:

Body	Aluminum
Fan	PBT UL 94V-0
Insulation	Class B
Approvals	UL, cUL Recognized VDE pending E118509

Box Count:

172 x 51	12 pieces
120 x 38	40 pieces
120 x 25	40 pieces
92 x 25	50 pieces
80 x 38	50 pieces
80 x 25	50 pieces

Part Number	Voltage (V)	Frequency (Hz)	Current (A) [50/60 Hz]	Speed (RPM) [50/60 Hz]	Power (W) [50/60 Hz]	Airflow (CFM) [50/60 Hz]	Maximum Air Pressure (Inch-H2O) [50/60 Hz]	Noise (dBA) [50/60 Hz]	Weight (g)	Connection	Bearing Type
80 x 80 x 38mm (3 1/8 x 1 1/2")											
99486904	220/240	50/60	0.07/0.06	2300/2750	14/12	23/30	0.12/0.18	31/35	340	Leads	Sleeve
99486914	115	50/60	0.17/0.13	2300/2750	14/12	23/30	0.12/0.18	31/35	340	Leads	Sleeve
99488905	220/240	50/60	0.07/0.06	2400/2850	14/13.5	24/31	0.13/0.19	32/36.5	340	Leads	Ball
80 x 80 x 25mm (3 1/8 x 1")											
99486804	220/240	50/60	0.07/.007	2300/2750	14/13.5	17/21	0.12/0.18	29/33	260	Leads	Sleeve
99486814	115	50/60	0.12/.010	2300/2750	12/11	17/21	0.12/0.18	29/33	260	Leads	Sleeve
99489804	220/240	50/60	0.07/0.07	2450/2900	14/13.5	18/22	0.13/0.19	30/34.5	260	Leads	Ball

Dimensions

172 x 51

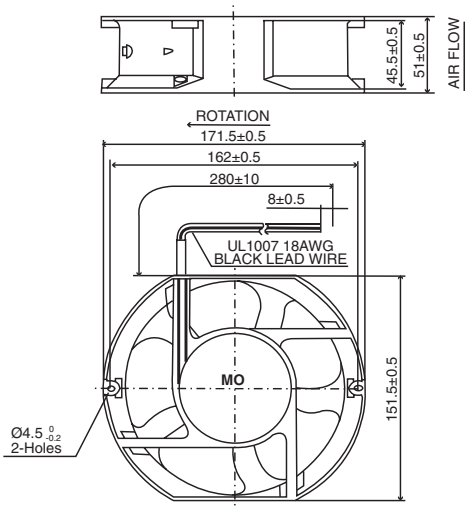

Air performance

994897

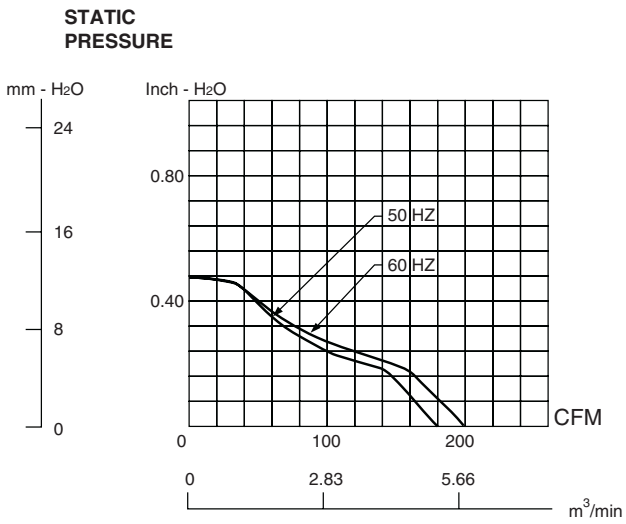

Other Information	To Order, Specify:
For dimensions and air flow performance see pages 154.	**99484002** Standard, normally stocked products
	99484003 Products produced to order - minimum quantities may apply

Products and specifications subject to change without notice.

AC Axial Fans - Dimensions and Performance

Dimensions

⌀ 120 x 38

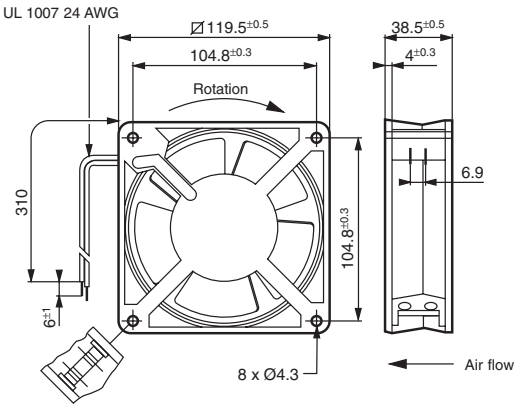

Air performance

99 487 420

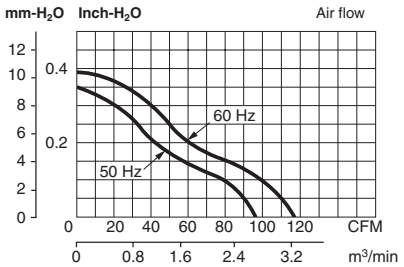

99 487 4
99 489 4

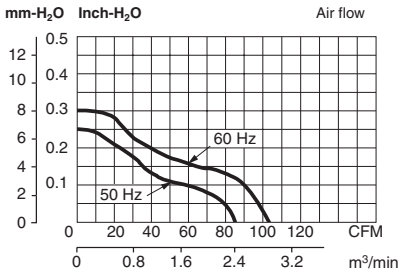

⌀ 92 x 25

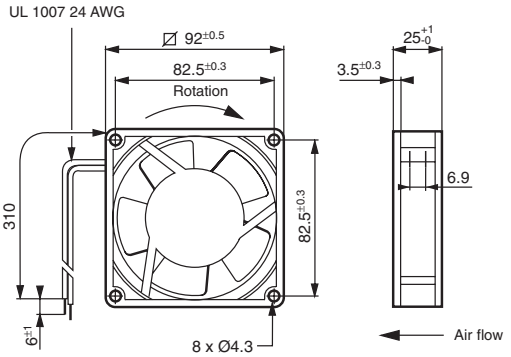

99 487 1

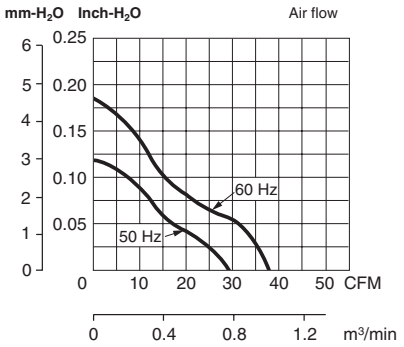

⌀ 80 x 38
⌀ 80 x 25

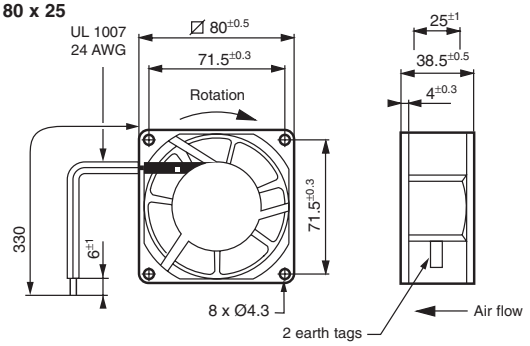

99 486 914
99 486 904

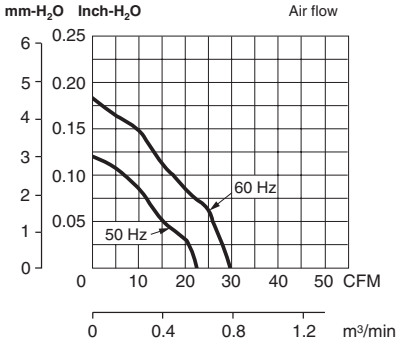

99 486 814
99 486 804

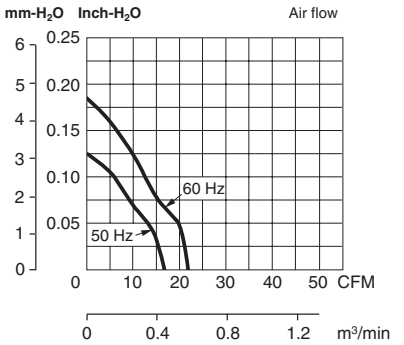

Products and specifications subject to change without notice.

Accessories for Fans

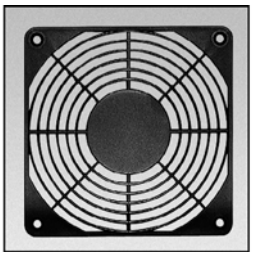
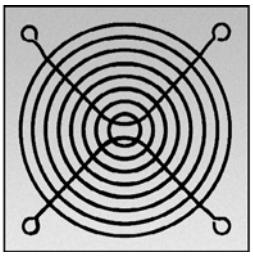
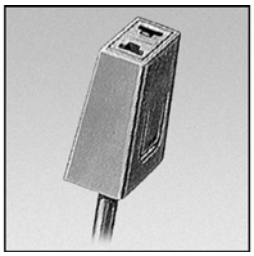
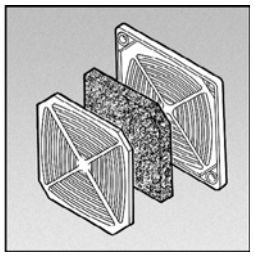

Part numbers

1

		plastic	metal		
Fingerguard	⌀ 40 mm		**99 485 910**		
	⌀ 60 mm	**99 485 923**	**99 485 900**		
	⌀ 80 mm	**99 485 922**	**99 485 901**		
	⌀ 92 mm	**99 485 921**	**99 485 904**		
	⌀ 120 mm	**99 485 920**	**99 485 902**		
T-type cord	Length 300 mm			**99 485 903**	
	Length 600 mm			**99 485 905**	
	Length 1000 mm			**99 485 906**	
	Length 2000 mm			**99 485 907**	
	Length 3000 mm			**99 485 908**	
Filter for fan - Protection + Filter + Cover	120 x 120				**99 485 909**

Characteristics

Products in conformity with UL - CSA - VDE				—
Material		—	—	UL 94V- 0

Dimensions

Plastic fingerguard

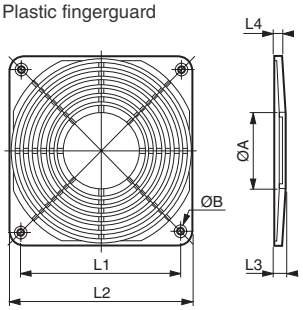

Metal fingerguard

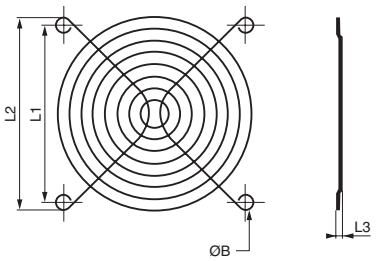

Filter

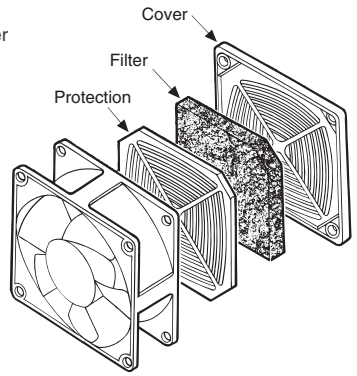

	L1		L2		L3		L4	ØA	ØB
	plastic	metal	plastic	metal	plastic	metal			
⌀ 40 mm	—	—	—	32	—	$5^{\pm 0.35}$	—	—	$4^{\pm 0.05}$
⌀ 60 mm	50	48	60	53.5	7.3	5	3.8	25	4.5
⌀ 80 mm	71.5	71.4	80	76.4	7.3	5	3.8	34	4.5
⌀ 92 mm	82.5	82.5	92	89.4	7.3	5.5	3.8	34	4.5
⌀ 120 mm	105	104.5	120	115.5	7	5.5	3.7	49	4.5

Protection

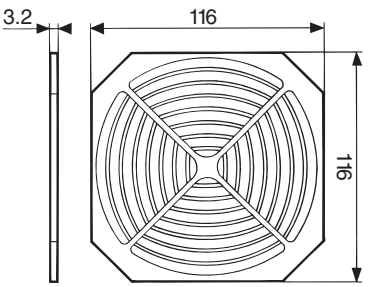

Cord

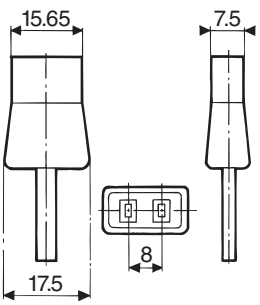

Cover

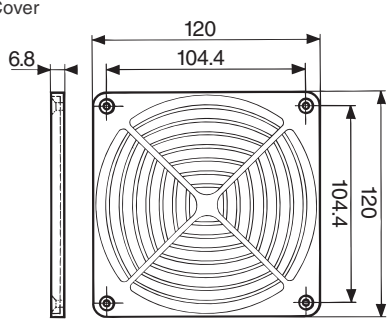

To order, specify :

Standard products	1 Part number Example : Fingerguard - 99 485 922
Made to order products, available on request	

Products and specifications subject to change without notice.

Crouzet Fans - Cross Reference

Comair Rotron	Crouzet
027117	99487413
027119	99487411
028021	99487411
028023	99487401
028027	99489411
028029	99489401
028171	99487403
028245	99489701
028291	99487413
028309	99489702
028516	99487401
EBM-Pabst	**Crouzet**
612	99484401*
614	99484404*
3412	99484251
3412G	99484201
3412GL	99484203
3412GM	99484203
3412L	99484253
3412M	99484253
3414	99484254
3414G	99484204
3414GL	99484206
3414GM	99484205
3414L	99484256
3414M	99484256
3906	99487112*
3906L	99487112*
3906M	99487112*
3956	99489102
3956L	99489102
3956M	99489102
4212	99484052
4212GM	99484004
4212L	99484054
4212M	99484054
4214	99484057
4214G	99484007
4214H	99484055
4292GM	99484004
4294H	99484055
4500AX	99487411
4500N	99487411
4530AX	99487411
4530N	99487411
4530Z	99487413
4530ZW	99487415
4550AX	99487401
4550N	99487401
4580AX	99487401
4580N	99487401
4580Z	99487403
4580ZW	99487405
4600AX	99487411
4600N	99487411
4600VX	99487411
4600X	99487411
4600XP	99487411
4600Z	99487411
4600ZW	99487410
4606AX	99489411
4606N	99489411
4606VX	99489411
4606X	99489411
4608N	99489411
4608Z	99489411
4608ZW	99489410
4650AX	99487401
4650N	99487401
4650VX	99487401
4650X	99487401
4650Z	99487401
4650ZW	99487400
4656AX	99489401
4656N	99489401
4656VX	99489401
4656X	99489401
4658N	99489401
4658Z	99489401
4658ZW	99489400
4800AX	99487413
4800N	99487413
4800Z	99487413
4800ZW	99487415
4840N	99487413
4850AX	99487403
4850N	99487403
4850N	99487403
4850Z	99487403
4850ZW	99487405
612G	99484401
612GL	99484403
612GM	99484401
612L	99484403*
612M	99484401*
614GL	99484404
614S	99484404*
8412	99484352
8412G	99484301
8412GL	99484353
8412L	99484353
8412M	99484353
8414	99484354
8414G	99484304
8414GL	99484306
8414GM	99484306
8414L	99484356
8414M	99484356

Etri	Crouzet w/ Terminals	Crouzet w/ Leads
		99484052
125DH-1LP11-000		99484002
125DH-1TP11-000		99484052
125DH-1TP31-000		99484002
125DH-2LP11-000		99484056
125DH-2LP31-000		99484006
125DH-2TP11-000		99484056
125DH-2TP31-000		99484006
125DL-1LP11-000		99484054
125DL-1LP31-000		99484004
125DL-1TP11-000		99484054
125DL-1TP13-000		99484004
125DL-2LP11-000		99484058
125DL-2LP31-000		99484008
125DL-2TP11-000		99484058
125DL-2TP31-000		99484008
125DM-1LP11-000		99484054
125DM-1LP31-000		99484004
125DM-2LP11-000		99484058
125DM-2LP31-000		99484008
125LG-0281-010	99489403	99489405
125LG-0282-010	99489413	99489415
125LG-2281-090	99487403	99487405
125LG-2282-010	99487413	99487415
125XL-0281-010	99489403	99489405
125XL-0282-010	99489413	99489415
125XL-2281-030	99487403	99487405
125XL-2282-030	99487413	99487415
125XR-0281-010	99489401	99489400
125XR-0282-010	99489411	99489410
125XR-2281-010	99487401	99487400
125XR-2282-010	99487411	99487410
126LF-0181-000	99486904*	
126LF-0182-000		99486914*
126LF-0281-000	99486904*	
126LF-0282-000		99486914*
126LF-2181-000	99486904	
126LF-2182-000		99486914
126LF-2281-000	99486904	
126LF-2282-000		99486914
126LH-2181-000	99486904	
126LH-2182-000		99486914
126LJ-0181-000	99486904*	
126LJ-0182-000		99486914*
126LJ-2181-000	99486904	
126LJ-2182-000		99486914
129LG-0281-010	99489403	99489405
129LG-0282-010	99489413	99489415
129LG-2281-010	99487403	99487405
129LG-2282-010	99487413	99487415
129XL-0281-010	99489403	99489405
129XL-0282-010	99489413	99489415
129XL-2281-010	99487403	99487405
129XL-2282-010	99487413	99487415
129XR-0281-010	99489401	99489400
129XR-0282-010	99489411	99489410
129XR-2281-010	99487401	99487400
129XR-2282-010	99487411	99487410
141LS-0281-010	99489401	99489400
141LS-0282-010	99489411	99489410
141LS-2281-010	99487401	99487400
141LS-2282-010	99487411	99487410
141LT-0281-010	99489403	99489405
141LT-0282-010	99489413	99489415
141LT-2281-010	99487403	99487405
141LT-2282-010	99487413	99487415
141LV-0281-010	99489403	99489405
141LV-0282-010	99489413	99489415
141LV-2281-010	99487403	99487405
141LV-2282-010	99487413	99487415
144LS-0281-010	99489401	99489400
144LS-0282-010	99489411	99489410
144LS-2281-010	99487401	99487400
144LS-2282-010	99487411	99487410
144LT-0281-010	99489403	99489405
144LT-0282-010	99489413	99489415

Etri	Crouzet w/ Terminals	Crouzet w/ Leads
144LT-2281-010	99487403	99487405
144LT-2282-010	99487413	99487415
144LV-0281-010	99489403	99489405
144LV-0282-010	99489413	99489415
144LV-2281-010	99487403	99487405
144LV-2282-010	99487413	99487415
146DF-0181-000		99486804*
146DF-0182-004		99486814*
146DF-2181-000		99486804
146DF-2182-004		99486814
146DH-1LP31-000		99484302
146DH-2LP31-000		99484305
146DJ-0182-004		99486814*
146DJ-2182-030		99489814
146DL-1LP31-000		99484303
146DL-2LP31-000		99484306
146DM-1LP31-000		99484303
146DM-2LP31-000		99484306
154DA-0281-030	99489702	99489704
154DA-0282-030	99489701	99489703
154DE-0281-030	99489702	99489704
154DE-0282-030	99489701	99489703
154DG-0281-030	99489702	99489704
154DG-0282-030	99489701	99489703
180DH-1LP31-000		99484602
180DL-1LP31-000		99484602
180DM-1LP31-000		99484602
181DH-1LP31-000		99484403
181DH-2LP31-000		99484404
181DL-1LP31-000		99484403
181DM-1LP31-000		99484403
181DM-2LP31-000		99484404
225DH-1LP11-000		99484051
225DL-2LP11-000		99484055
225DM-1LP11-000		99484052
246DH-1LP11-000		99484351
246DH-2LP11-000		99484354
246DL-1LP11-000		99484353
246DL-2LP11-000		99484356
270DM-1LP11-000		99484751
280DH-1LP11-000		99484601*
281DH-1LP11-000		99484401*
281DH-2LP11-000		99484404*
281DL-1LP11-000		99484401*
281DL-2LP11-000		99484404*
298DM-1LP11-000		99484152*
298DM-2LP11-000		99484155*
299DH-1LP11-000		99484251*
98DH-1LP31-000		99484103
98DH-2LP31-000		99484106
98DL-1LP31-000		99484103
98DL-2LP31-000		99484106
98DM-1LP31-000		99484103
98DM-2LP31-000		99484106
98XC-0181-000		99489301
98XC-2181-000		99489301
98XH-0181-000		99489301
98XH-2181-000		99489301
99DH-1LP31-000		99484202
99DH-2LP31-000		99484205
99DL-1LP31-000		99484203
99DL-2LP31-000		99484206
99DM-1LP31-000		99484203
99DM-2LP31-000		99484206
99XM-0181-000	99487102*	99487104*
99XM-0182-000	99487112*	99487114*
99XM-2181-000	99487102	99487104
99XM-2182-000	99487112	99487114
99XU-0181-000	99487102*	99487104*
99XU-0182-000	99487112*	99487114*
99XU-2181-000	99487102	99487104
99XU-2182-000	99487112	99487114
99XW-0181-000	99487102*	99487104*
99XW-0182-000	99487112*	99487114*
99XW-2181-000	99487102	99487104
99XW-2182-000	99487112	99487114

Globe	Crouzet	Globe	Crouzet
A31-B10A-15W3-000	99486814	D24-B10A-05W4-100	99484404
A31-B15A-15W1-000	99486914	D24-B10A-05W5-100	99484404
A31-B15A-15W2-000	99486914	D31-B10A-04W2-100	99484353
A31-B15A-15W3-000	99486914	D31-B10A-04W3-100	99484352
A31-B15A-23W1-000	99486904	D31-B10A-04W5-100	99484351
A31-B15A-23W2-000	99486904	D31-B10A-05W2-100	99484356
A31-B15A-23W3-000	99486904	D31-B10A-05W3-100	99484355
A36-B10A-15T1-000	99487112	D31-B10A-05W5-100	99484354
A36-B10A-15T2-000	99487112	D36-B10A-04W2-100	99484253
A36-B10A-15T3-000	99487112	D36-B10A-04W3-100	99484252
A36-B10A-23T1-000	99489102	D36-B10A-04W5-100	99484251
A36-B10A-23T2-000	99489102	D36-B10A-05W2-100	99484256
A36-B10A-23T3-000	99489102	D36-B10A-05W3-100	99484255
A47-B10A-23T2-000	99489301	D36-B10A-05W5-100	99484254
A47-B10A-23T3-000	99489301	D47-B10A-04W2-000	99484152
A47-B15A-15T1-000	99489413	D47-B10A-04W3-000	99484151
A47-B15A-15T2-000	99489411	D47-B10A-05W2-000	99484155
A47-B15A-15T3-000	99489411	D47-B10A-05W3-000	99484154
A47-B15A-23T1-000	99489403	D47-B15A-04W2-100	99484053
A47-B15A-23T2-000	99489401	D47-B15A-04W3-100	99484052
A47-B15A-23T3-000	99489401	D47-B15A-04W4-100	99484051
D24-B10A-04W3-100	99484451	D47-B15A-05W2-100	99484057
D24-B10A-04W4-100	99484451	D47-B15A-05W3-100	99484056
D24-B10A-04W5-100	99484451	D47-B15A-05W4-100	99484055
D24-B10A-05W3-100	99484404		

Grainger (Dayton)	Crouzet
4WT33	99487401
4WT34	99484402
4WT35	99484301
4WT36	99484001
4WT37	99484404
4WT38	99484304
4WT39	99484005
4WT40	99486914
4WT41	99486904
4WT42	99489701
4WT43	99489702
4WT46	99487490
4WT47	99487411
4WT48	99487413
4WT49	99487413
MR2B3	99489701
MR77B3	99489702
MU2A1	99487411
MU2B1	99489411
MU3A1	99487401
MU3B1	99489401
MX2A3	99487411
MX2B3	99489430
MX3A3	99487420
MX3B3	99489423
SU2A1	99486914
SU3A1	99486904
WR2A1	99487413
WR3A1	99487403

Multicomp	Crouzet
MC1123HST	99487411
MC1123HBT	99489411
MC1123HSL	99487410
MC2123HST	99487401
MC2123HBT	99489401
MC2123HSL	99487400
MC1123LST	99487413
MC1123LSL	99487415
MC2123LST	99487403
MC2123LSL	99487405
MC1092HST	99487112
NMB	**Crouzet**
2410ML-04W-B10	99484403*
2410ML-04W-B20	99484403*
2410ML-04W-B30	99484401*
2410ML-04W-B40	99484401*
2410ML-05W-B10	99484404*
2410ML-05W-B20	99484404*
2410ML-05W-B30	99484404*
2410ML-05W-B40	99484404*
2410ML-05W-B50	99484404*
2410ML-05W-B60	99484404*
2410NL-04W-B10	99484403*
2410NL-04W-B20	99484403*
2410NL-04W-B30	99484403*
2410NL-04W-B40	99484401*
2410NL-04W-B50	99484401*
2410NL-05W-B10	99484404*
2410NL-05W-B20	99484404*
2410NL-05W-B30	99484404*
2410NL-05W-B40	99484404*
2410NL-05W-B50	99484404*
3110NL-04W-B10	99484353
3110NL-04W-B20	99484353
3110NL-04W-B30	99484352
3110NL-04W-B40	99484351
3110NL-04W-B50	99484351
3110NL-05W-B10	99484356
3110NL-05W-B20	99484356
3110NL-05W-B30	99484354
3110NL-05W-B40	99484354
3110NL-05W-B50	99484354
3110PS-12W-B30	99486814*
3115FS-12T-B00	99486914*
3115FS-12T-B10	99486914*
3115FS-12T-B20	99486914*
3115FS-12T-B30	99486914*
3115PS-12T-B10	99486914*
3115PS-12T-B20	99486914*
3115PS-12T-B30	99486914*
3610NL-04W-B10	99484253
3610NL-04W-B20	99484253
3610NL-04W-B30	99484252
3610NL-04W-B40	99484251
3610NL-04W-B50	99484251
3610NL-04W-B50	99484254
Toyo	**Crouzet**
TAC12025230HT	99484301
TAC12025230MT	99484301
TAC12038115HT	99489411
TAC12038115LT	99489413
TAC12038115MT	99489413
TAC12038230HT	99489401
TAC12038230LT	99489403
TAC12038230MT	99489403
TAC17251115HT	99489701
TAC17251115LT	99489701
TAC17251115MT	99489701
TAC17251230HT	99489702
TAC17251230LT	99489702
TAC17251230MT	99489702
TAC8025115HW	99486814*
TAC8025115MW	99486814*
TAC8025230HW	99486804*
TAC8025230MW	99486804*
TAC8038115HW	99486914*
TAC8038115LW	99486914*
TAC8038115MW	99486914*
TAC8038230HW	99486904*
TAC8038230LW	99486904*
TAC8038230MW	99486904*
TAC9225115HT	99487112*
TAC9225115LT	99487112*
TAC9225115MT	99487112*
TAC9225230HT	99487102*
TAC9225230LT	99487102*
TAC9225230MT	99487102*
USTF1202512LW	99484152
USTF1202512MW	99484151
USTF120252302T	99489301
USTF120252303T	99489301
USTF1202524LW	99484155
USTF1202524MW	99484154
USTF120381151T	99489413
USTF120381152T	99489413
USTF120381153T	99489411
USTF120381155T	99489411

Multicomp	Crouzet
MC1092HSL	99487114
MC2092HST	99487102
MC2092HSL	99487104
MC1083HSL	99486914
MCKD1204PFB2	99484751
MCKDE1208PTB2-6	99484352
MCKDE2408PTB2-6	99484305
MCKDE1209PTB2-6	99484252
MCKDE2409PTB2-6	99484255
MCKDE1212PTB2-6A	99484152
MCKDE2412PTB2-6A	99484155
NMB	**Crouzet**
3610NL-05W-B10	99484255
3610NL-05W-B20	99484255
3610NL-05W-B30	99484255
3610NL-05W-B40	99484254
3610PS-12T-B10	99487112*
3610PS-12T-B20	99487112*
3610PS-12T-B30	99487112*
4710NL-04W-B10	99484153
4710NL-04W-B20	99484153
4710NL-04W-B30	99484152
4710NL-04W-B40	99484152
4710NL-04W-B50	99484151
4710NL-05W-B10	99484156
4710NL-05W-B20	99484156
4710NL-05W-B30	99484155
4710NL-05W-B40	99484155
4710NL-05W-B50	99484154
4715FS-12T-B00	99489413
4715FS-12T-B10	99489413
4715FS-12T-B20	99489413
4715FS-12T-B30	99489411
4715FS-12T-B40	99489411
4715FS-12T-B50	99489411
4715ML-04W-B10	99484054
4715ML-04W-B20	99484053
4715ML-04W-B30	99484052
4715ML-04W-B40	99484051
4715ML-05W-B10	99484058
4715ML-05W-B20	99484057
4715ML-05W-B30	99484056
4715ML-05W-B40	99484055
4715MS-12T-B10	99489413
4715MS-12T-B20	99489413
4715MS-12T-B30	99489411
4715MS-12T-B40	99489411
4715MS-12T-B50	99489411
4715PL-04W-B20	99484054
4715PL-04W-B30	99484053
4715PL-05W-B20	99484058
4715PL-05W-B30	99484057
4715PS-12T-B10	99489413
4715PS-12T-B20	99487490
4715PS-12T-B30	99487490
Toyo	**Crouzet**
USTF1203812HW	99484051
USTF1203812LW	99484054
USTF1203812MW	99484052
USTF120382301T	99489403
USTF120382302T	99489403
USTF120382303T	99489401
USTF120382305T	99489401
USTF1203824HW	99484055
USTF1203824LW	99484058
USTF1203824MW	99484056
USTF251012HW	99484801
USTF251012MW	99484801*
USTF401012LW	99484751
USTF401012MW	99484751
USTF402012HW	99484601*
USTF402012MW	99484601*
USTF601512HW	99484502*
USTF601512LW	99484502*
USTF601512MW	99484502*
USTF601512VHW	99484501*
USTF602524HW	99484404*
USTF602524LW	99484404*
USTF602524MW	99484404*
USTF80251153W	99489814*
USTF802512HW	99484351
USTF802512MW	99484352
USTF802524HW	99484354
USTF802524MW	99484355
USTF80381153T	99486914*
USTF80382303T	99486904*
USTF92251152T	99487112*
USTF92251153T	99487112*
USTF922512HW	99484251
USTF922512LW	99484253
USTF922512MW	99484252
USTF92252302T	99487102*
USTF92252303T	99487102*
USTF922524HW	99484254
USTF922524LW	99484256
USTF922524MW	99484255

Sunon	Crouzet
DP200A2123XBL	99489421
DP200A2123XBT	99489420
DP200A2123XBT(S)	99489422
DP200A2123XSL	99487421
DP200A2123XST	99487420
DP200A2123XST(S)	99487422
DP201A2123HBL	99489400
DP201A2123HBT	99489401
DP201A2123HSL	99487400
DP201A2123HST	99487401
DP203A2123LBL	99489405
DP203A2123LBT	99489403
DP203A2123LSL	99487405
DP203A2123LST	99487403
KDE1202PFS2	99484801
KDE1204PFS2	99484701
KDE1204PKS2	99484601
KDE1204PKS3	99484602
KDE1206PHS2	99484501
KDE1206PHS3	99484502
KDE1206PTS1	99484401
KDE1206PTS2	99484402
KDE1206PTS3	99484403
KDE1208PTB1-6	99484351
KDE1208PTB2-6	99484352
KDE1208PTB3-6	99484353
KDE1208PTS1-6	99484301
KDE1208PTS2-6	99484302
KDE1208PTS3-6	99484303
KDE1209PTB1-6	99484251
KDE1209PTB2-6	99484252
KDE1209PTB3-6	99484253
KDE1209PTS1-6	99484201
KDE1209PTS2-6	99484202
KDE1209PTS3-6	99484203
KDE1212PMB1-6A	99484052
KDE1212PMB2-6A	99484053
KDE1212PMB3-6A	99484054
KDE1212PMBX-6A	99484051
KDE1212PMS1-6A	99484002
KDE1212PMS2-6A	99484003
KDE1212PMS3-6A	99484004
KDE1212PMSX-6A	99484001
KDE1212PTB1-6A	99484151
KDE1212PTB2-6A	99484152
KDE1212PTB3-6A	99484153
KDE1212PTS1-6A	99484101
KDE1212PTS2-6A	99484102
KDE1212PTS3-6A	99484103
KDE2406PTS1	99484404
KDE2408PTS1-6	99484304
KDE2408PTS2-6	99484305
KDE2408PTS3-6	99484306
KDE2409PTB1-6	99484254
KDE2409PTB2-6	99484255
KDE2409PTB3-6	99484256
KDE2409PTS1-6	99484204
KDE2409PTS2-6	99484205
KDE2409PTS3-6	99484206
KDE2412PMB1-6A	99484056
KDE2412PMB2-6A	99484057
KDE2412PMB3-6A	99484058
KDE2412PMBX-6A	99484055
KDE2412PMS1-6A	99484006
KDE2412PMS2-6A	99484007
KDE2412PMS3-6A	99484008
KDE2412PMSX-6A	99484005
KDE2412PTB1-6A	99484154
KDE2412PTB2-6A	99484155
KDE2412PTB3-6A	99484156
KDE2412PTS1-6A	99484104
KDE2412PTS2-6A	99484105
KDE2412PTS3-6A	99484106
SF11580A1083HSL	99486914
SF11580AT1082HSL	99486814
SF11592A1092HSL	99487114
SF11592A1092HST	99487112
SF23080A2083HSL	99486904
SF23080AT2082HSL	99486804
SF23092A2092HBT	99489102
SF23092A2092HSL	99487104
SF23092A2092HST	99487102
SP101A1123HBL	99489410
SP101A1123HBT	99489411
SP101A1123HSL	99487410
SP101A1123HST	99487411
SP103A1123LBL	99489415
SP103A1123LBT	99489413
SP103A1123LSL	99487415
SP103A1123LST	99487413

*Ball Bearings by request only.

Products and specifications subject to change without notice.

Order/Technical Support - Tel: (800) 677-5311 / FAX: (800) 677-3865 / www.crouzet-usa.com

Crouzet